FORM NO. 3315–165

TORO®

MODEL NO. 20326–2000001 & UP

PARTS CATALOG

21" RECYCLER®
Mower

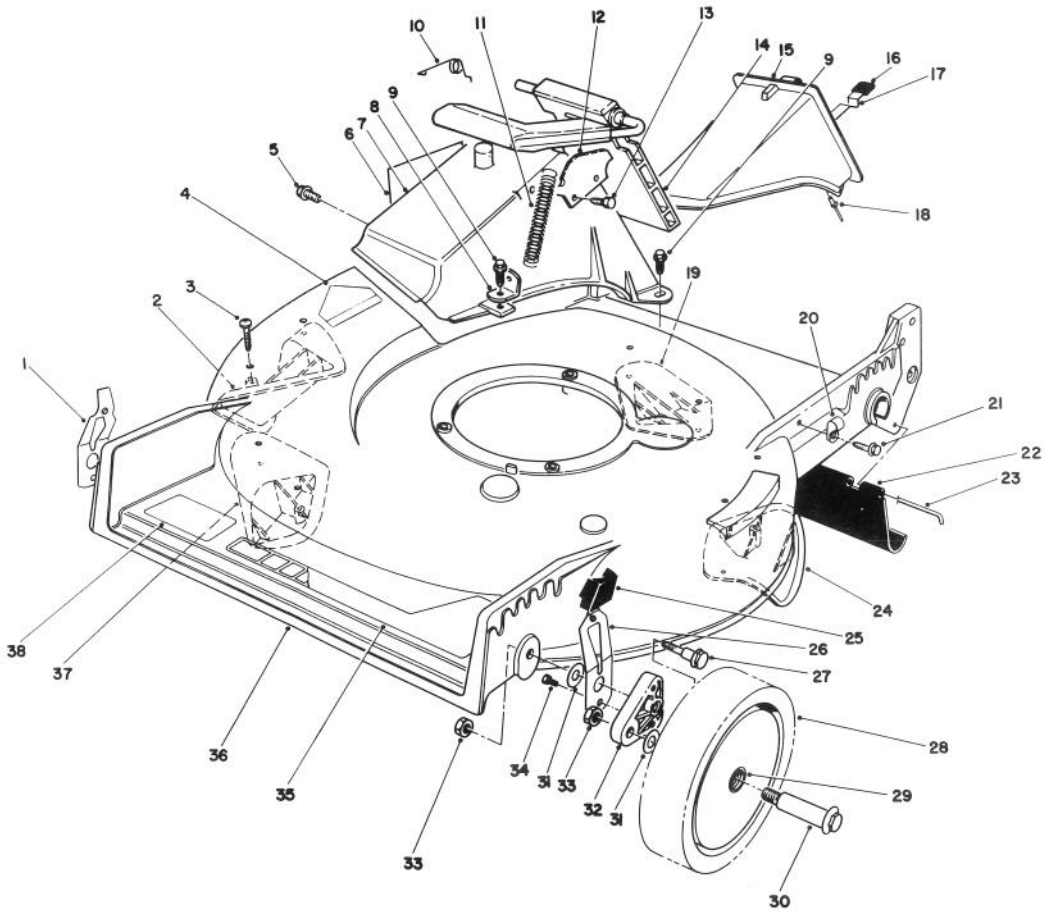

C–1125

HOUSING ASSEMBLY

Ref. No.	Part No.	Description	No. Used
1	71–0560	Spring Arm Ass'y – R.H.	2
2	76–2130	Plate – Kicker Left Front	1
3	32144–111	Screw – Pan Hd.	8
4	56–6270	Decal – Danger	1
5	46–6810	Screw – Hex Washer Hd. Thread Forming	1
6	62–4060	Decal – Danger	1
7	82–9151	Tunnel – Discharge	1
8	80–3780	Bracket – Spring	1
9	46–6811	Screw w/Washer	3
10	80–3770	Retainer – Door	1
11	76–4660	Spring – Door	1
12	76–4570	Plate – Latch	1
13	46–8090	Screw – Hex Washer Hd. Self Tapping	2

Ref. No.	Part No.	Description	No. Used
14	77–0200	Door – Discharge	1
15	77–0501	Discharge Plug Assembly (Incl. Ref. #16–18)	1
16	76–4650	Grip – Latch	1
17	76–4640	Latch – Plug	1
18	3295–35	Rivet	1
19	76–2160	Plate – Kicker Left Rear	1
20	2412–89	R–Clamp	1
21	32144–112	Screw – Hex Washer Hd Self Tapping	1
22	44–0580	Shield – Rear	1
23	33–3208	Rod – Shield	1
24	76–2140	Plate – Kicker Right Rear	1
25	25–7740	Knob – Spring Arm	4
26	71–0570	Spring Arm Ass'y – L.H.	2

© The TORO Company – 1992

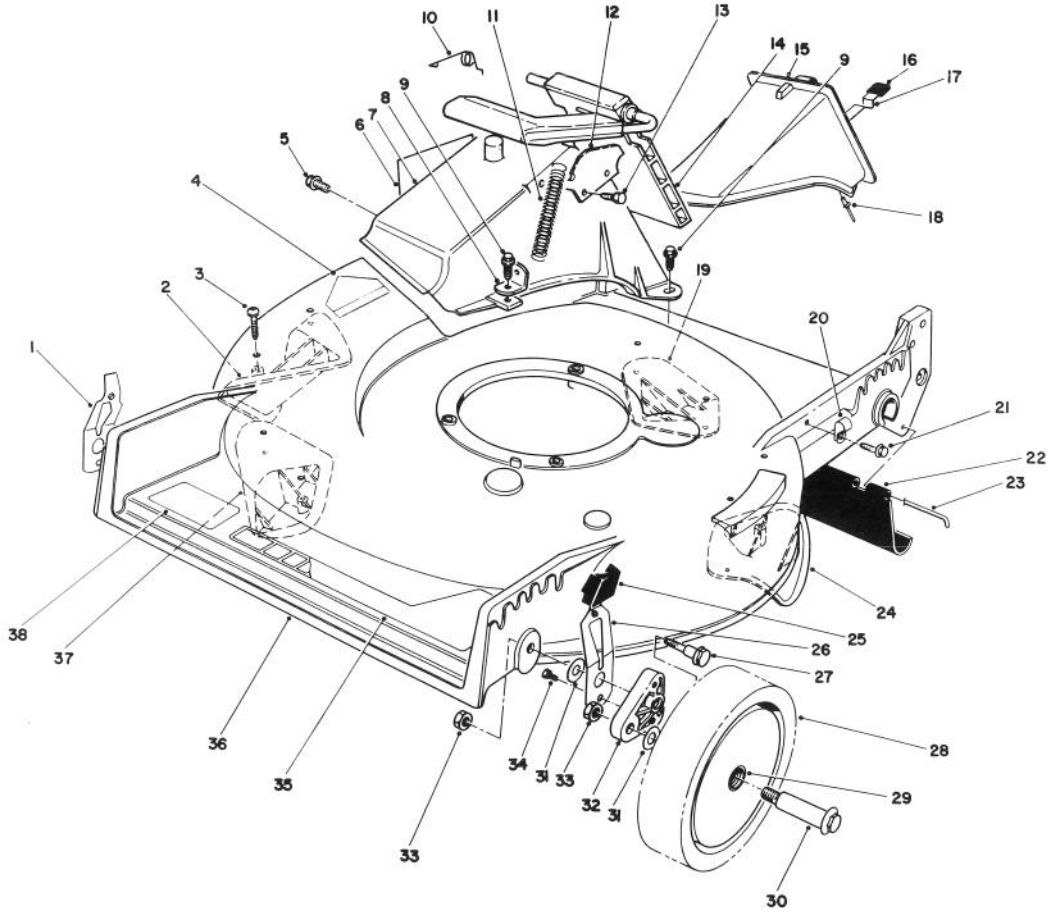

C–1125

HOUSING ASSEMBLY (CONTINUED)

Ref. No.	Part No.	Description	No. Used
27	66–0561	Screw – Pivot	4
28	11–9509	Wheel & Tire Assembly (Incl. Ref. #29)	4
29	27–6250	Bushing – Wheel	8
30	27–6231	Bolt – Wheel	4
31	40–1940	Washer – Wheel	8
32	66–0580	Arm – Pivot	4
33	52–3620	Nut – Lock	8

Ref. No.	Part No.	Description	No. Used
34	32144–85	Screw – Hex Hd. Cap	4
35	76–1950	Decal – Deck	1
36	14–3499	Housing Assembly (incl. Ref. #2–4, 19, 24, & 37)	1
37	76–2120	Plate – Kicker Rt. Front	1
38	71–0600	Decal – Toro	1

*Not Illustrated

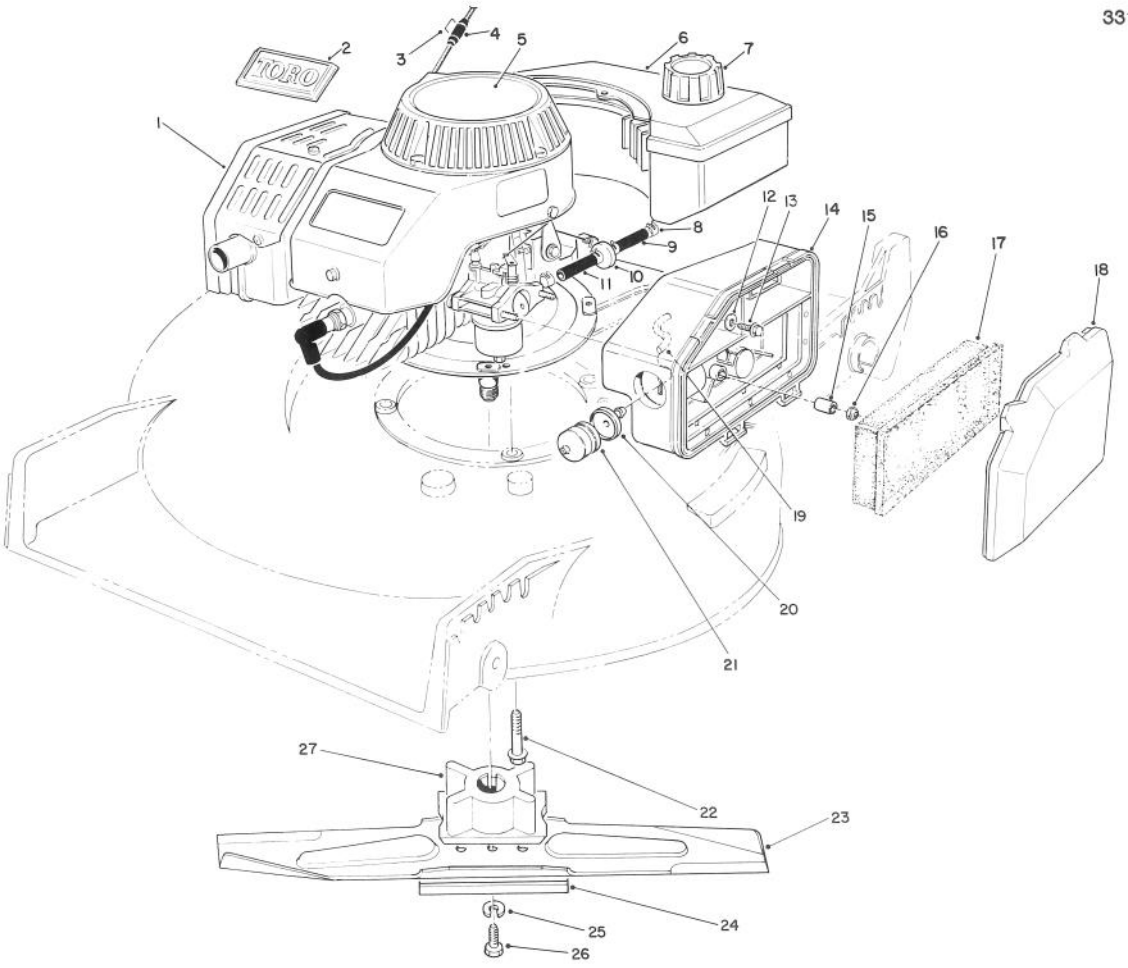

C–0608

ENGINE ASSEMBLY

Ref. No.	Part No.	Description	No. Used
1	51–0413	Engine (Complete)	1
2	46–8290	Plate – Toro Logo	1
†3		Staple	1
4	81–3980	Stop – Rope	1
5	66–0510	Decal – Recoil	1
6	81–0042	Fuel Tank Assembly	1
7	55–3575	Gas Cap Assembly	1
8	2412–95	Clamp – Fuel Line	4
9	51–3215	Line – Fuel	1
10	56–6360	Filter – Fuel	1
11	51–3216	Line – Fuel	1
12	3256–16	Washer – Flat	1
13	51–2690	Screw – Hex Washer Hd.	1
14	63–9330	Air Cleaner	1

Ref. No.	Part No.	Description	No. Used
15	62–3980	Sleeve	2
16	50–7180	Nut – Lock	2
17	63–9380	Foam Element – Air Cleaner	1
18	63–9340	Cover – Air Cleaner	1
19	44–3172	Hose – Primer	1
20	44–2750	Body – Primer	1
21	66–7460	Bulb – Primer	1
22	66–9300	Screw – Hex Flange Hd.	3
23	14–1659	Blade – 21" (Incl. Ref. #24)	1
24	80–0510	Stiffener – Blade	1
25	3253–22	Washer – Lock	1
26	26–0670	Screw – Blade	1
27	62–7540	Retainer – Blade	1

†Obtain Locally

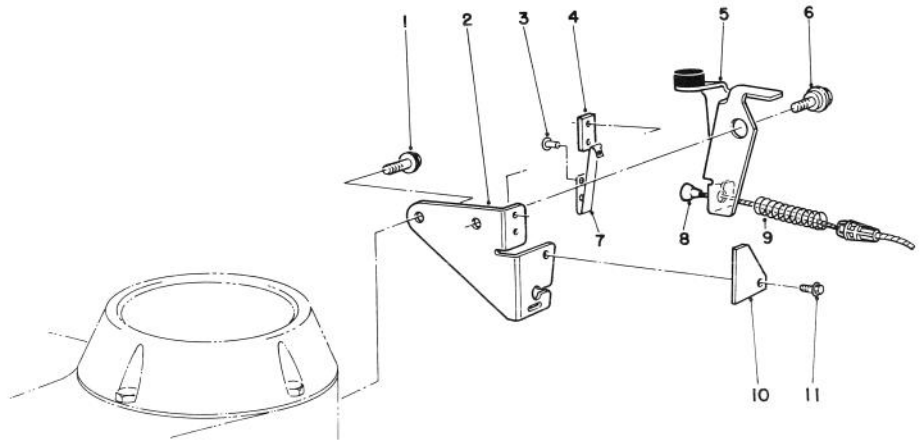

C–0531

BRAKE ASSEMBLY

Ref. No.	Part No.	Description	No. Used
1	46–0790	Screw – Self Tapping	1
2	84–7820	Plate – Mounting	1
3	3290–459	Rivet	2
4	77–5260	Strap – Insulation	1
5	66–5380	Brake Plate Assembly	1
6	56–6190	Screw – Shoulder Metric	1

Ref. No.	Part No.	Description	No. Used
7	60–9010	Strap – Ground	1
8	85–6901	Cable – Brake	1
9	66–5370	Spring – Compression	1
10	53–4690	Stop – Ground Strap	1
11	32144–112	Screw – Self Tapping	1

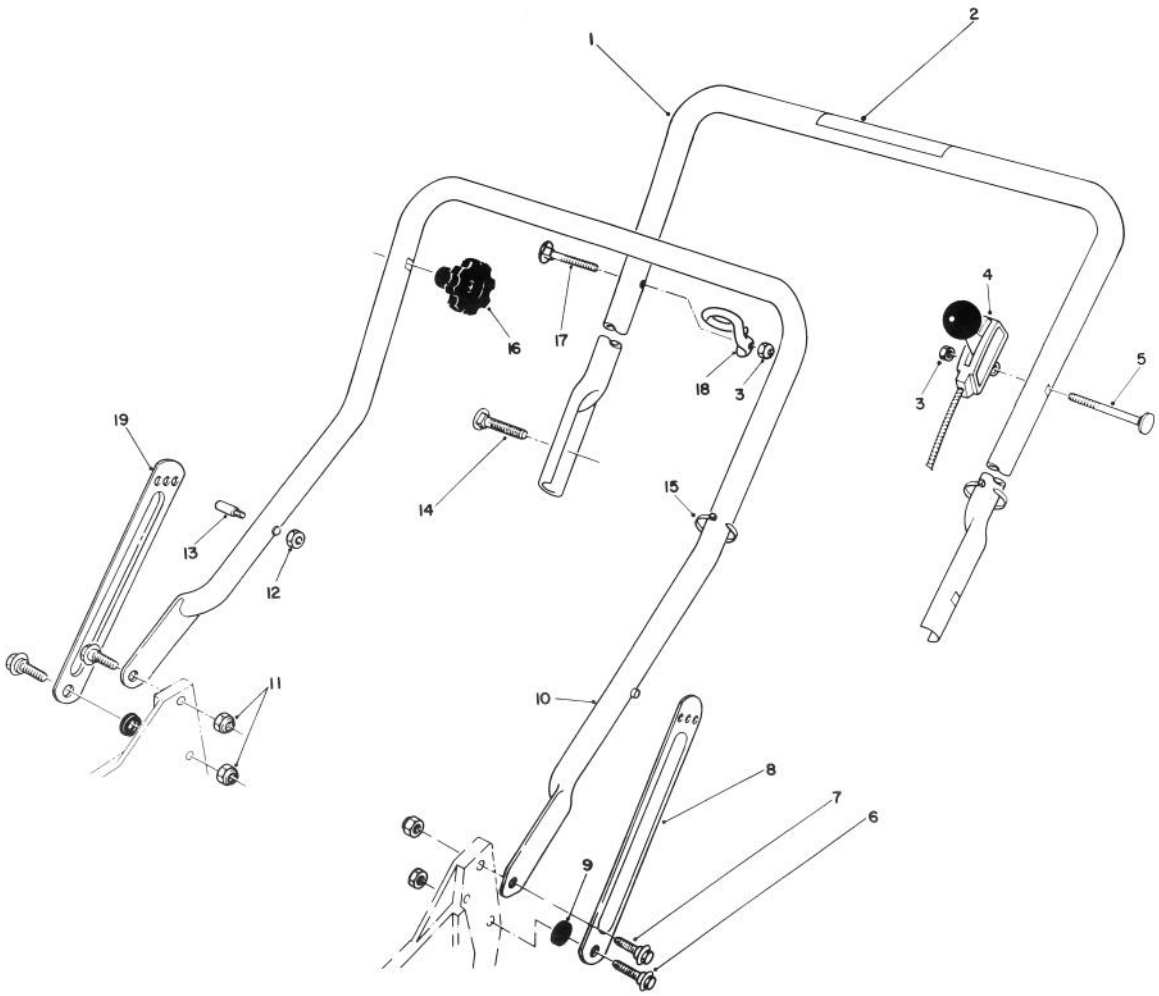

C–1126

HANDLE ASSEMBLY

Ref. No.	Part No.	Description	No. Used
1	13–2319	Handle – Upper (Incl Ref. #2)	1
2	63–8540	Decal – Warning	1
3	3296–42	Locknut	2
4	84–5660	Control – Throttle (Bend Type #1) (Sheath Lg. 42 5/8") (Wire Lg. 1–3/4")	1
5	46–6430	Screw – Handle	1
6	27–7210	Screw – Shoulder	2
7	27–7211	Screw – Shoulder	2
8	84–8360	Latch – Handle L.H.	1

Ref. No.	Part No.	Description	No. Used
9	3–3287	Spacer	2
10	43–1361	Lower Handle Assembly	1
11	3296–29	Locknut	4
†12	3296–47	Locknut	2
†13	49–2750	Pin – Handle	2
14	17–9421	Screw – Handle	2
15	3290–378	Tie – Cable	2
16	19–4050	Knob – Handle Release	2
17	46–6433	Screw – Handle	1
18	46–8080	Guide – Rope	1
19	84–8400	Latch – Handle R.H.	1

†Service Replacement Parts

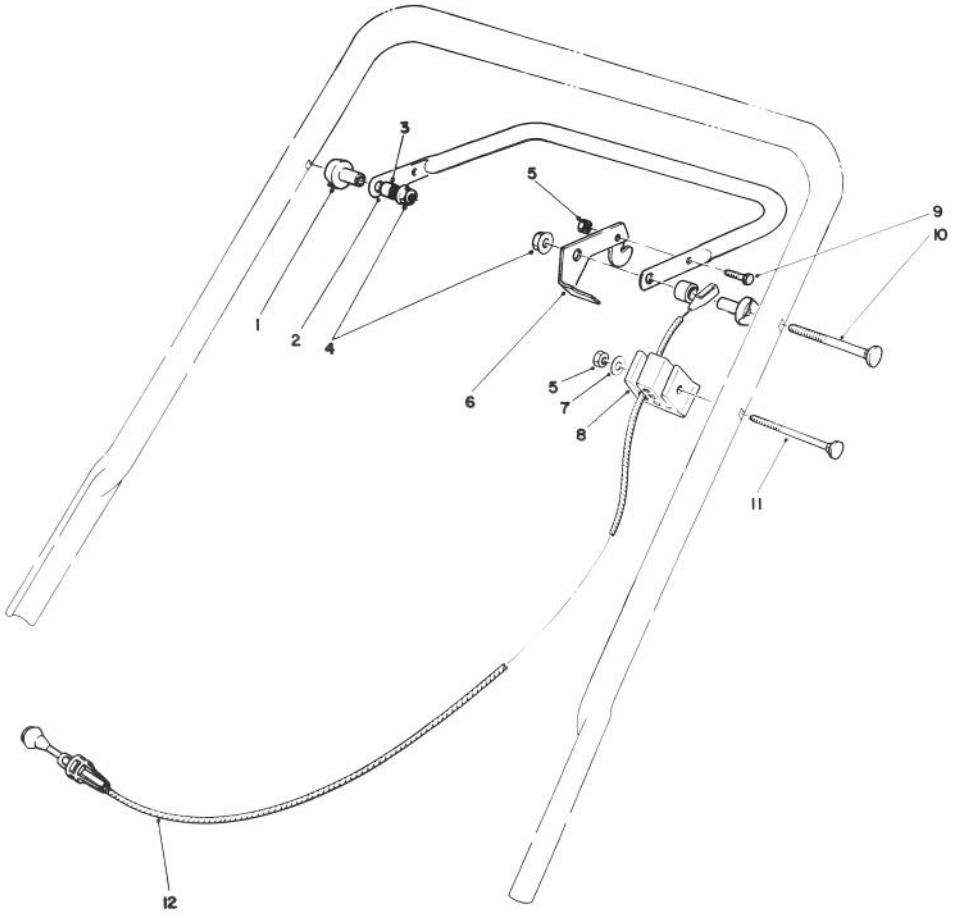

C–1127

TRACTION CONTROL ASSEMBLY

Ref. No.	Part No.	Description	No. Used
1	49–1630	Support – Spacer	2
2	71–3080	Bar – Control	1
3	256–276	Spacer – Nylon	2
4	3296–58	Locknut	2
5	3296–42	Locknut	2
6	66–5350	Lever – Control	1

Ref. No.	Part No.	Description	No. Used
7	3256–22	Washer – Flat	1
8	46–6980	Support – Cable	1
9	321–3	Capscrew – Hex Hd.	1
10	17–9421	Screw – Handle	2
11	46–6434	Screw – Handle	1
12	85–6901	Cable – Brake	1

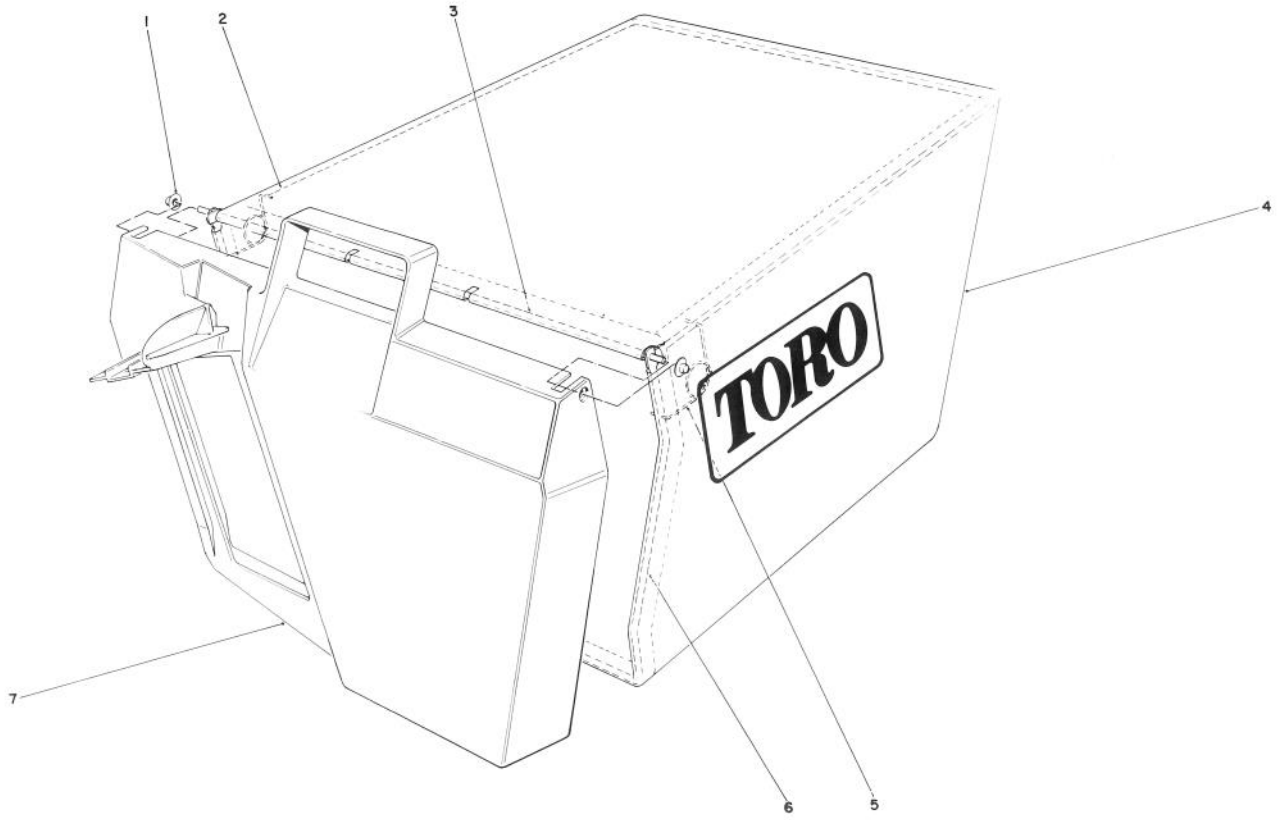

C–0301

GRASS BAG ASSEMBLY 11–0159

Ref. No.	Part No.	Description	No. Used
1	3290–422	Nut – Push	2
2	42–4030	Bag Frame – Upper	1
3	33–4820	Hinge – Bag Door	1
4	44–0522	Bag – Grass	1

Ref. No.	Part No.	Description	No. Used
5	36–6910	Spring	2
6	43–0030	Frame – Bag	1
7	36–1332	Door – Grass Bag	1

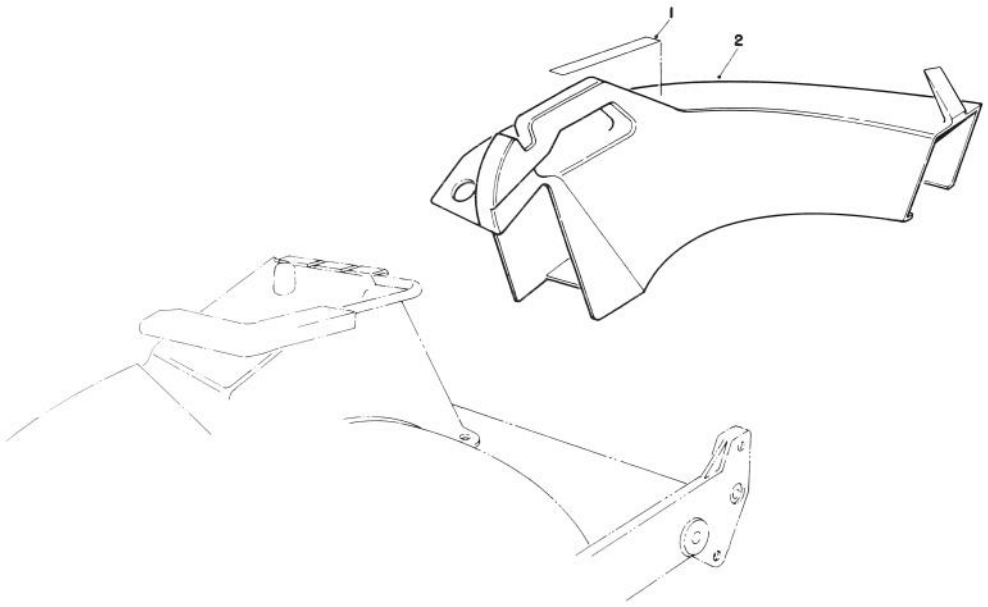

T–0716

SIDE DISCHARGE CHUTE MODEL NO 59168 (OPTIONAL)

Ref. No.	Part No.	Description	No. Used
1	76–4780	Decal – Caution	1
2		Chute – Discharge (Incl. Ref. #1)	1

Ref. No.	Part No.	Description	No. Used

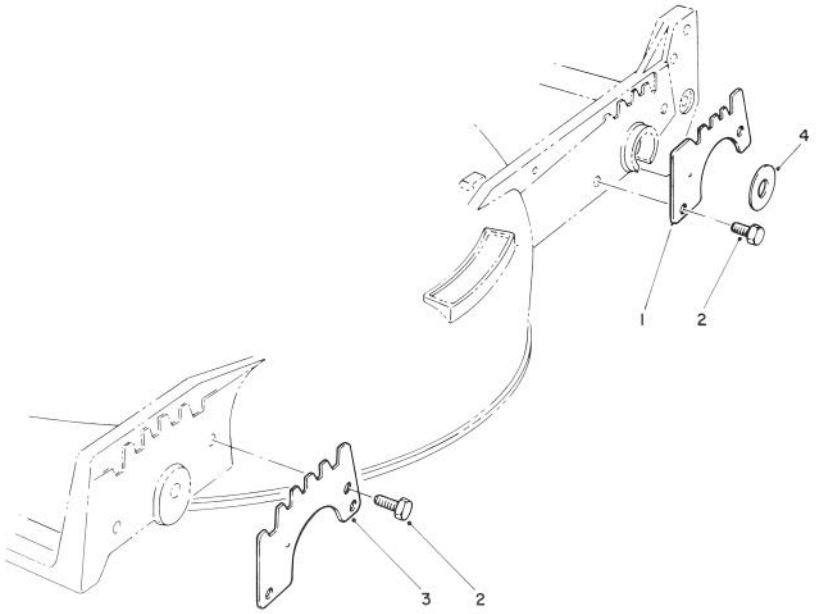

C–0304

WEAR PLATE MODEL NO. 49–4080 (OPTIONAL)

Ref. No.	Part No.	Description	No. Used
1	49–4070	Plate – Rear Wear	2
2	32104–17	Thread Forming Screw	8

Ref. No.	Part No.	Description	No. Used
3	43–5050	Plate – Wear Front	2
4	33–0390	Washer	2

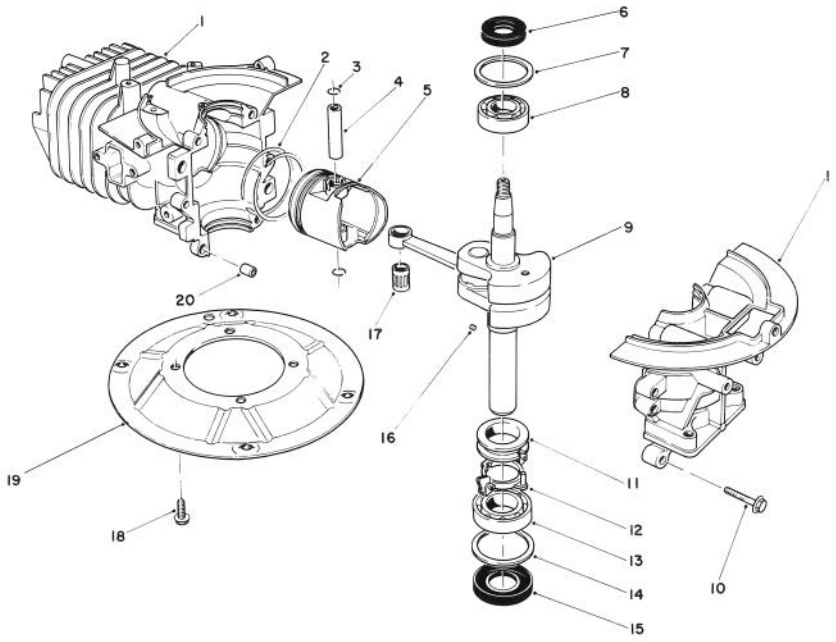

C–0190

CRANK SHAFT ASSEMBLY (Model No. 47PM1–1)

Ref. No.	Part No.	Description	No. Used
1	81–2800	Crankcase/Cylinder Ass'y	1
2	81–0590	Ring Set	1
3	81–0620	Circlip	2
4	81–0600	Pin – Wrist	1
5	81–0580	Piston (58mm)	1
6	81–0720	Oil Seal – Upper	1
7	81–0710	Thrust Washer – Upper	1
8	81–0690	Bearing – Upper (20mm)	1
9	81–4600	Crankshaft/Connecting Rod Assembly	1
10	81–0540	Bolt (30mm Lg.)	6

Ref. No.	Part No.	Description	No. Used
11	81–0770	Spacer – Governor	1
12	81–0750	Bracket – Governor Arm	1
13	81–0700	Bearing – Lower (25mm)	1
14	81–0730	Thrust Washer – Lower	1
15	81–0740	Oil Seal – Lower	1
16	81–0760	Pin – Crankshaft	1
17	81–0610	Bearing – Wrist Pin	1
18	81–0570	Bolt (20mm Lg.)	4
19	81–0560	Plate – Mounting	1
20	81–0520	Pin – Crankcase	2
*	12–7699	Short Block Assembly	1

*Not Illustrated

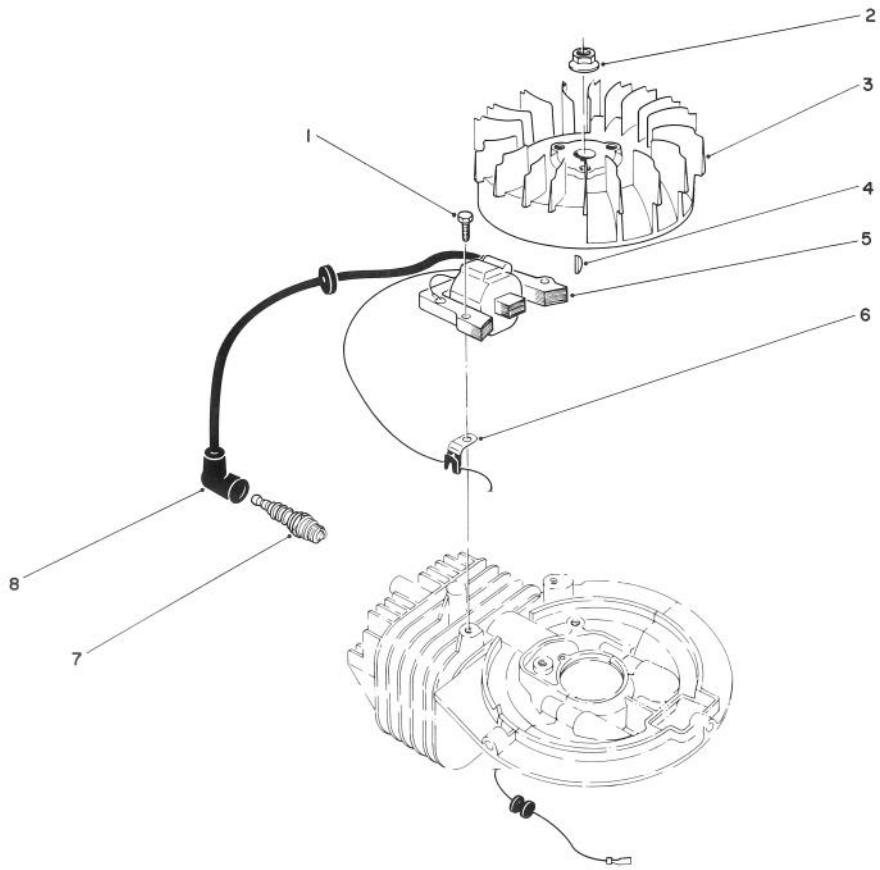

C–0176

IGNITION ASSEMBLY
(Model No. 47PM1–1)

Ref. No.	Part No.	Description	No. Used
1	81–5680	Capscrew – Hex Hd.	2
2	81–1330	Nut	1
3	81–2810	Flywheel – Magneto	1
4	81–2370	Key – Flywheel	1
5	81–2820	Coil/Ignition Assembly	1

Ref. No.	Part No.	Description	No. Used
6	81–1480	Clamp	1
7	81–0181	Spark Plug	1
8	81–1500	Cover – Spark Plug	1
*	41–7650	Puller – Flywheel	1

*Not Illustrated

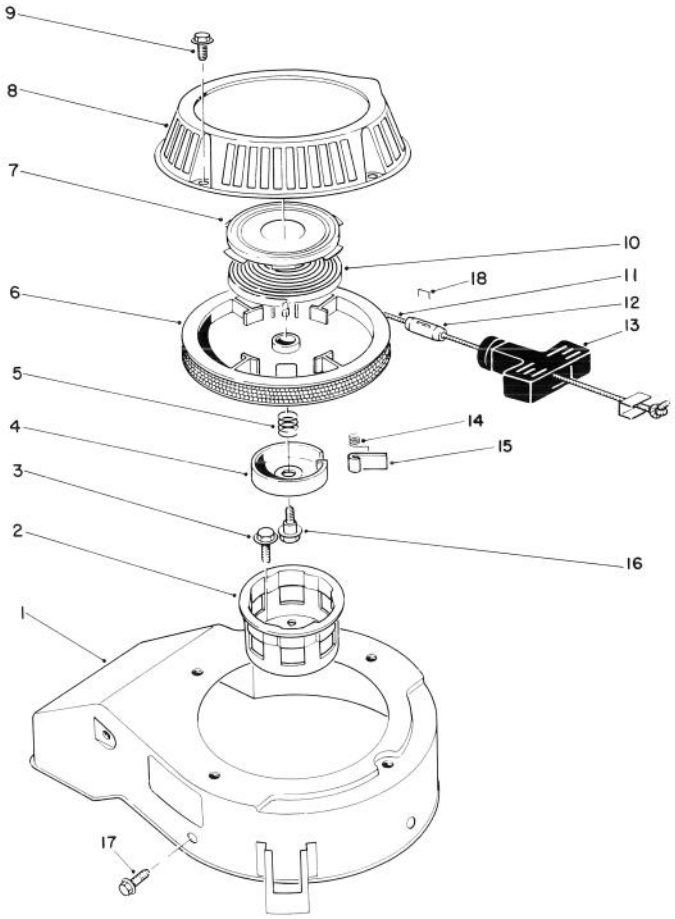

C–0178

RECOIL ASSEMBLY
(Model No. 47PM1–1)

Ref. No.	Part No.	Description	No. Used
1	81–2070	Cover – Cooling Fan	1
2	81–1290	Pulley – Starter Cup	1
3	81–1300	Bolt (16mm Lg.)	3
4	81–1250	Retainer – Dog	1
5	81–1240	Spring – Compression	1
6	81–1210	Reel – Rope Pulley	1
7		Retainer Cup – Recoil Spring	1
8	81–2090	Case – Recoil	1
9	81–1280	Bolt	4
10		Spring – Recoil	1
11	81–1270	Rope	1
12	81–3980	Stop – Recoil	1
13	81–1630	Handle – Recoil	1
14	81–1220	Spring – Dog	1
15	81–1230	Dog	1
16	81–1260	Bolt – Shoulder	1
17	81–1170	Bolt – Self Tapping (15mm Lg.)	3
†18		Staple	1
*	81–2040	Starter Assembly (Incl. Ref. #4–16)	1
*	81–2300	Spring & Retainer (Incl. Ref. #6 & 9)	1

*Not Illustrated
†Obtain Locally

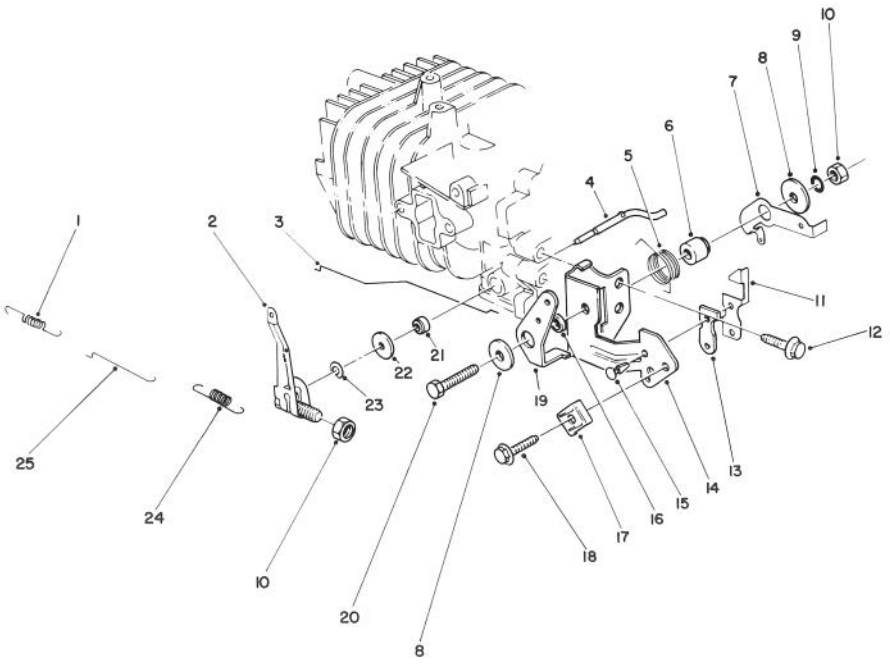

C–0192

GOVERNOR ASSEMBLY (Model No. 47PM1–1)

Ref. No.	Part No.	Description	No. Used
1	81–0920	Spring – Carburetor Rod	1
2	81–5420	Governor Arm/Bolt Ass'y	1
3	81–5410	Rod – Choke	1
4	81–2880	Shaft – Governor	1
5	81–2460	Spring – Choke Control Lever	1
6	81–1770	Spacer – Governor Spring Lever	1
7	81–2850	Lever – Governor Spring	1
8	81–1750	Washer – Choke Control Lever	2
9	81–1450	Washer – Lock	1
10	81–0900	Nut	2
11	81–1840	Terminal – Kill Switch	1
12	81–1170	Bolt – Self Tapping (15mm Lg.)	1

Ref. No.	Part No.	Description	No. Used
13	81–1830	Insulator – Kill Switch	1
14	81–2420	Bracket – Throttle Control	1
15	81–1850	Rivet – Kill Switch	2
16	81–2470	Spacer – Choke Control Lever	1
17	81–2430	Clamp – Cable	1
18	50–0130	Bolt – Cable Clamp	1
19	81–1710	Lever – Choke Control	1
20	81–1730	Bolt – Throttle Control Brkt.	1
21	81–0850	Oil Seal – Governor Shaft	1
22	81–0860	Washer	1
23	81–0870	E–Ring	1
24	81–2830	Spring – Governor	1
25	81–0910	Rod – Carburetor	1

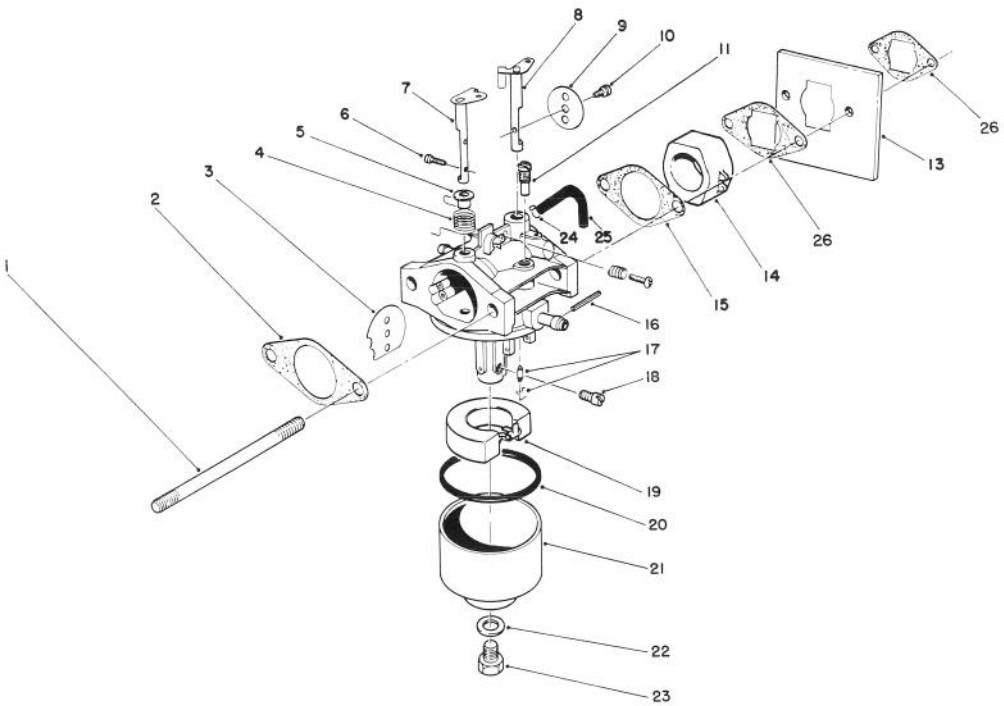

C–0191

CARBURETOR ASSEMBLY (Model No. 47PM1–1)

Ref. No.	Part No.	Description	No. Used
1	81–5450	Stud Bolt – Carburetor	2
2	81–0090	Gasket	2
3	81–0240	Valve – Choke	1
4	81–0230	Spring – Choke	1
5	81–0220	Bushing – Choke Valve	1
6	81–2160	Screw	2
7	81–1950	Shaft – Choke	1
8	81–0250	Shaft – Throttle	1
9	81–0260	Valve – Throttle	1
10	81–0270	Screw – Throttle Valve	1
11	81–1030	Jet – Pilot (#40)	1
13	81–5490	Shield – Carburetor	1
14	81–5440	Insulator – Carburetor	1
15	81–0780	Gasket	1
16	81–5600	Pin	1
17	81–4910	Needle Valve/Spring Wire	1
18	81–1060	Jet – Main (#75)	1

Ref. No.	Part No.	Description	No. Used
*	81–2340	Jet – Main (#72.5) High Alt., Above 6000 (Optional)	1
19	81–0970	Float	1
20	81–1010	Gasket – Float Bowl	1
21	81–5660	Bowl – Float	1
22	81–1020	Gasket – Bowl Screw	1
23	81–5670	Screw – Bowl	1
24	81–5460	Clamp – Vent Tube	1
25	81–5470	Tube – Vent	1
26	81–2320	Gasket	2
*	12–6379	Carburetor Kit (Incl. Ref. #2, 15, 17, 20, & 22)	1
*	81–5430	Carburetor Assembly – Complete	1
*	81–5810	Needle Valve Seat Kit (Incl. Ref. #17)	1

*Not Illustrated

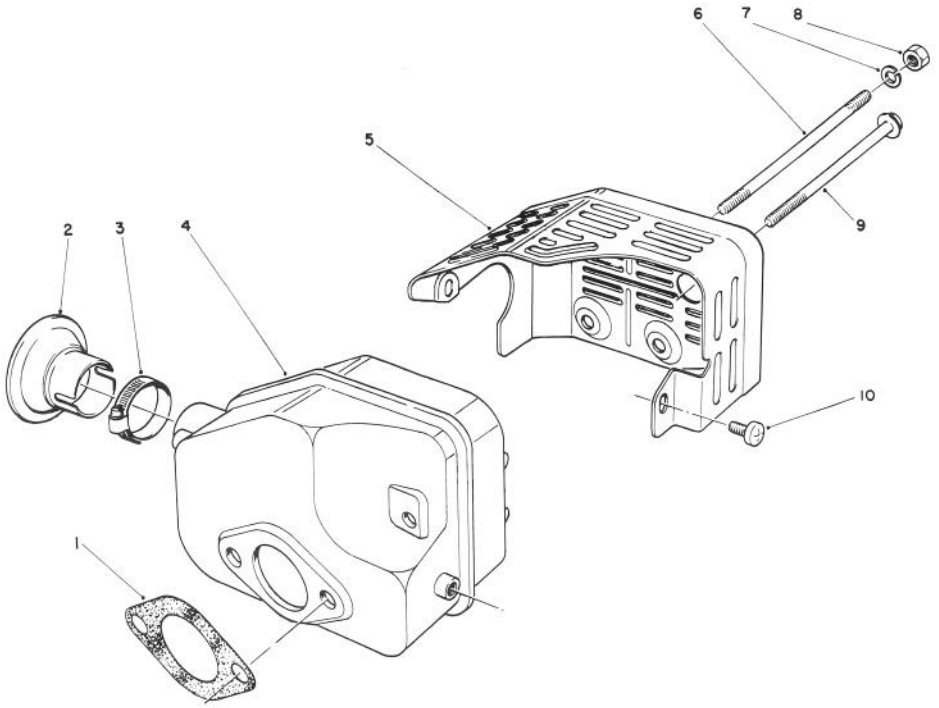

C–0667

MUFFLER ASSEMBLY (Model No. 47PM1–1)

Ref. No.	Part No.	Description	No. Used
1	81–1080	Gasket – Muffler	1
*2	81–0200	Spark Arrester	1
†3		Clamp	1
4	81–5690	Muffler	1
5	81–2450	Cover – Muffler	1

Ref. No.	Part No.	Description	No. Used
6	81–1100	Bolt	2
7	81–1120	Washer – Lock	2
8	81–1110	Nut	2
9	81–1150	Bolt – Self Tapping	1
10	81–1140	Screw – Phillips Hd.	2

*Optional Equipment
†Obtain Locally

PRODUCT CHANGES

In an effort to make improvements available to TORO owners as quickly as possible, minor changes are incorporated into Toro's products from time to time that do not become immediately shown in the Parts Catalog. If such a change has been made in your unit, which is not reflected in your manual, see your TORO Distributor or his Authorized TORO Service Dealer for information and part numbers.

COUNTRIES OTHER THAN THE UNITED STATES OR CANADA

Customers who have purchased TORO products exported from the United States or Canada should contact their Toro Distributor (Dealer) to obtain guarantee policies for your country, province or state. If for any reason you are dissatisfied with your Distributor's service or have difficulty obtaining guarantee information, contact the TORO importer. If all other remedies fail, you may contact us at The Toro Company.

MAINTENANCE RECORD

Date								

Compliance with Radio Interference Regulations Certified.
Certifie Conforme au Reglement sur le Brouillage Radioelectrique.

LTS 201577
Litho in U.S.A.