FORM NO. 3315–234

TORO®

MODEL NO. 51255–2000001 & UP

PARTS CATALOG

1010 TRIMMER

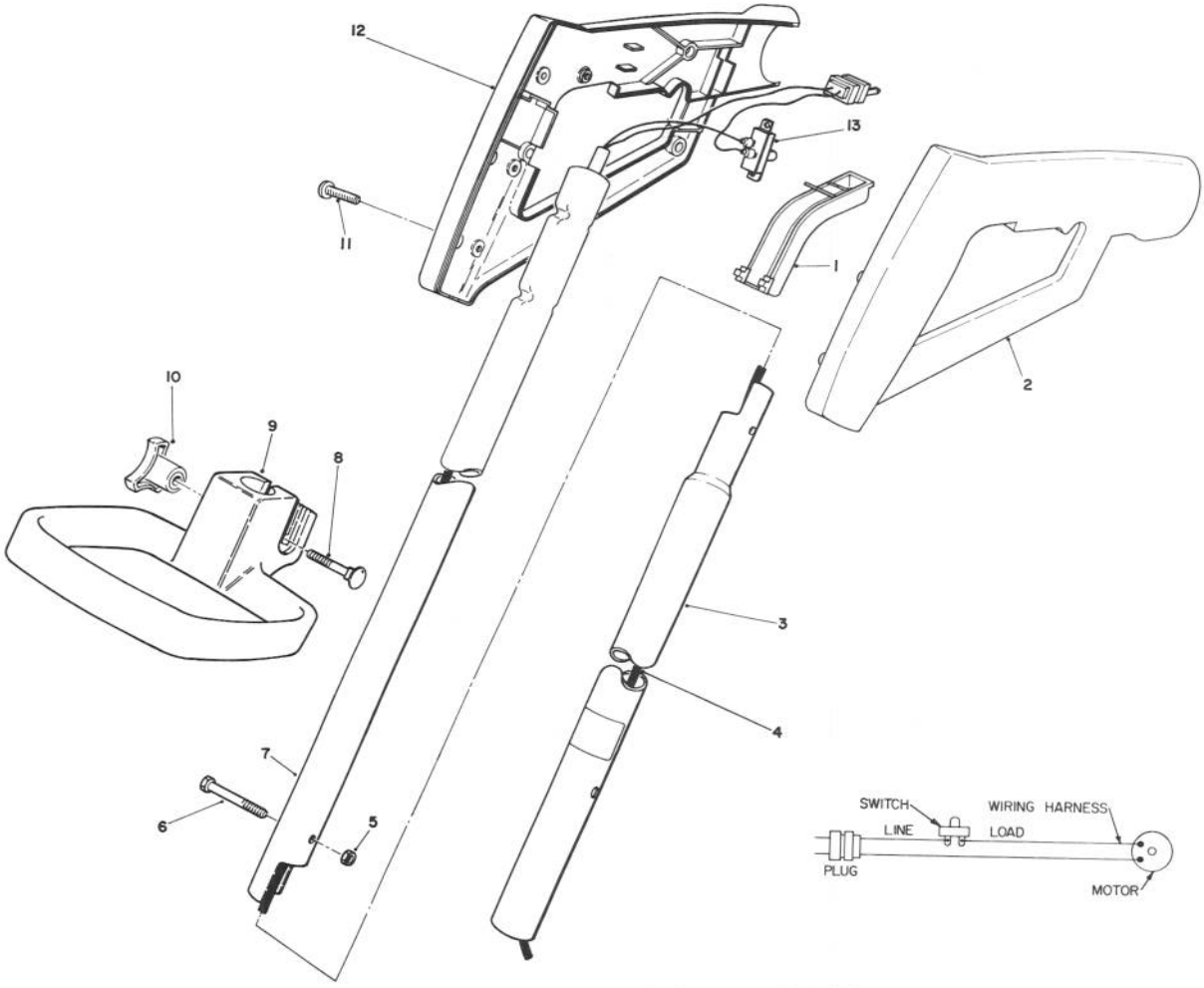

C–1112

HANDLE ASSEMBLY

Ref. No.	Part No.	Description	No. Used
1	73–5580	Bar – Switch	1
2	73–5620	Grip – Left Hand	1
3	73–6010	Tube – Lower Extension	1
4	73–5591	Harness – Wire	1
5	3296–12	Nut – Lock	1
6	33–8950	Screw – Hex Hd. Machine	1
7	73–5630	Tube – Upper Extension	1

Ref. No.	Part No.	Description	No. Used
8	33–5790	Bolt – Carriage	1
9	61–8902	Handle – Adjustment	1
10	73–4740	Knob – Adjustment	1
11	32104–121	Screw – Thread Forming	6
12	73–5610	Grip – Right Hand	1
13	73–5600	Switch – Single Speed	1

© The TORO Company – 1991

TPS

3315–234

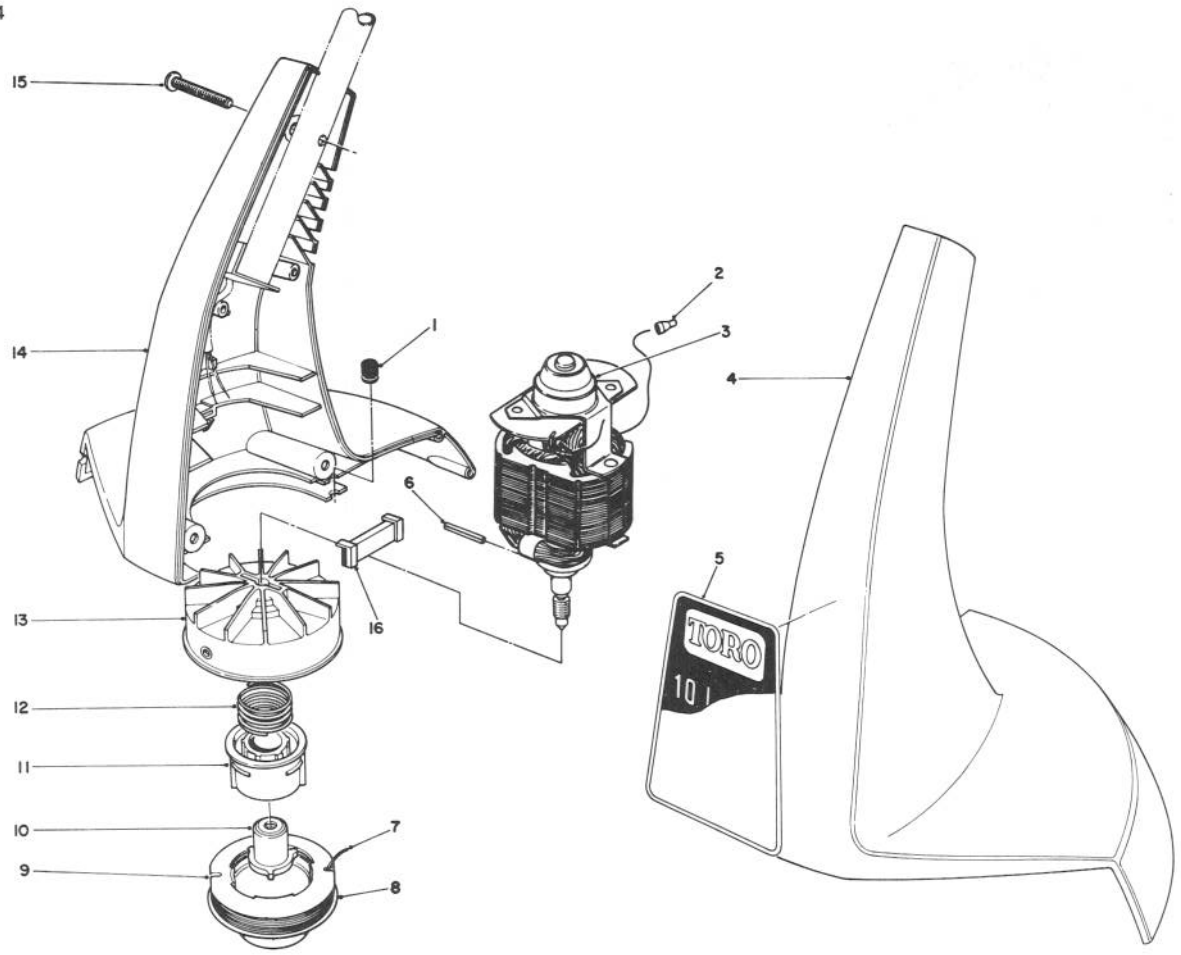

C–1113

MOTOR AND HOUSING ASSEMBLY

Ref. No.	Part No.	Description	No. Used
1	33–8710	Grommet	1
2	218–496	Connector – Electric	2
3	34–2580	Motor	1
4	73–5140	Housing – Left Hand	1
5	73–1180	Decal – Housing	1
6	32121–88	Pin – Coil	1
7	88011	Line – Cutting (30' .05 Dia.)	1
8	44–5520	Cap – Spool	1
9	88015	Line – Cutting (30' .05 Dia. Prewound on Spool)	1

Ref. No.	Part No.	Description	No. Used
10	34–9100	Driver – Detent	1
11	29–8120	Core – Spool	1
12	29–8230	Spring – Compression	1
13	33–8680	Fan Hub Assembly	1
14	34–5734	Housing – Right Hand	1
15	32104–121	Screw – Thread Forming	6
16	73–5120	Insert – Housing	2