Form Number 3358-837 Rev A

Groundsmaster® 3280-D
Traction Unit

Model No. 30344 - 270000601 and up.

Parts Catalog

Ordering Replacement Parts
To order replacement parts, please supply the part number, the quantity, and the description of each part desired.

Understanding Reference Numbers
Each Identified part in an illustration has a reference number. The reference number for a part also appears in the parts list, along with other information about the part.

This catalog uses two special reference number formats, one to indicate parts in a service assembly and another to indicate the quantity of a given part in an illustration.

Service Assembly Reference Numbers
Parts in service assemblies have reference numbers in the form a:b. The a represents the reference number of the entire service assembly and the b represents a sequential number unique to each part within the service assembly.

For example, a wheel assembly might be identified by reference number 6, the tire by 6:1, the valve by 6:2, and the wheel by 6:3. When you order the assembly identified by reference number 6, you receive all parts identified by reference numbers 6:1, 6:2, and 6:3. However, you may also order any part individually. Reference numbers of this type appear in illustrations and in part lists.

Reference Numbers Indicating Quantity
In an illustration, if a reference number indicates more than one part, the reference number has the form nX y. The n represents the quantity of the part, the X is the multiplication symbol, and the y represents the reference number.

For example, in an illustration, the reference number 2X 37 means that two of the parts identified by reference number 37 are indicated.

Register your product at www.Toro.com

© The Toro Company - 2007
All Rights Reserved

Contents

Description	Page
Frame and Hood Assembly	4
Frame Assembly No. 108-2010	5
Fuel Tank and Control Panel Assembly	6
Power Steering Assembly	8
Traction Pedal Assembly	9
Brake Pedal Assembly	10
Battery and Engine Mount Assembly	11
Power-Take-Off and Shaft Assembly	12
Hydraulic Cylinder and Lift Arm Assembly	13
Hydraulic Valve Assembly No. 114-2877	14
Hydraulic Manifold Assembly No. 114-2863	15
Radiator Assembly	16
Transmission Installation Assembly	17
Center Section Assembly Transmission Assembly No. 108-1355	18
Neutral Return Arm Assembly Transmission Assembly No. 108-1355	20
Fuel Delivery System Assembly	21
Lower Control Panel Assembly	22
Rear Axle and Tire Assembly	23
Rear Axle Assembly	24
Steering Cylinder Assembly No. 76-2070	25
Air Cleaner and Drive Coupling Assembly	26
Air Cleaner Assembly No. 104-3427	27
Front Axle Assembly	28
Front Axle Assembly No. 108-6599-03	29
Right and Left Hand Brake Assembly	31
Engine Assembly No. 1	32
Engine Assembly No. 2	33
Crankcase Assembly	34
Oil Pan Assembly	35
Cylinder Head Assembly	36
Gear Case Assembly	37
Head Cover Assembly	38
Dipstick and Guide Assembly	39
Main Bearing Case Assembly	40
Camshaft and Idle Gear Shaft Assembly	41
Piston and Crankshaft Assembly	42
Flywheel Assembly	43
Fuel Camshaft and Governor Shaft Assembly	44
Idle Apparatus Assembly	45
Injection Pump Assembly	46
Governor Assembly	47
Speed Control Plate Assembly	48
Nozzle Holder and Glow Plug Assembly	49
Nozzle Holder Assembly	50
Alternator and Pulley Assembly	51
Alternator Components	52
Starter Assembly	53
Starter Component Assembly	54
Water Flange and Thermostat Assembly	55
Water Pump Assembly	56
Valve and Rocker Arm Assembly	57
Inlet Manifold Assembly	58
Muffler Gasket and Operator Manual	59
Upper and Lower Gasket Kits	60
Attachments and Accessories List	61

Part Description Abbreviations

Part descriptions in this catalog may include the following abbreviations.

AR. . . . . as required
ASM. . . . . assembly
BBC. . . . . blade brake clutch
CARR. . . . . carriage
DEG. . . . . degrees
EXT. . . . . external
FH. . . . . flat head
GA. . . . . gauge
HD. . . . . heavy-duty
HF. . . . . hex flange
HH. . . . . hex head
HHF. . . . . hex head flange
HHFTF. . . . . hex head flange thread forming
HJ. . . . . hex jam
HLH. . . . . hex lag head
HOC. . . . . height-of-cut
HSBH. . . . . hex socket button head
HSFH. . . . . hex socket flat head
HSH. . . . . hex socket head
HWH. . . . . hex washer head
HWHTF. . . . . hex washer head thread forming
HYD. . . . . hydraulic
LH. . . . . left hand
NI. . . . . nylon insert
NPTF. . . . . national pipe thread fine
PFH. . . . . phillips flat head
PPH. . . . . phillips pan head
PPHTF. . . . . phillips pan head thread forming
PRH. . . . . phillips round head
PTH. . . . . phillips truss head
PTO. . . . . power-take-off
RH. . . . . right hand
ROPS. . . . . roll-over protection system
SFH. . . . . slotted fillister head
SHH. . . . . slotted hex head
SHWH. . . . . slotted hex washer head
SPH. . . . . slotted pan head
SQH. . . . . square head
SRH. . . . . slotted round head
STD. . . . . standard
TAP. . . . . self tapping
TTH. . . . . torx truss head

Footnotes

❶ Not illustrated

❷ Not serviced separately

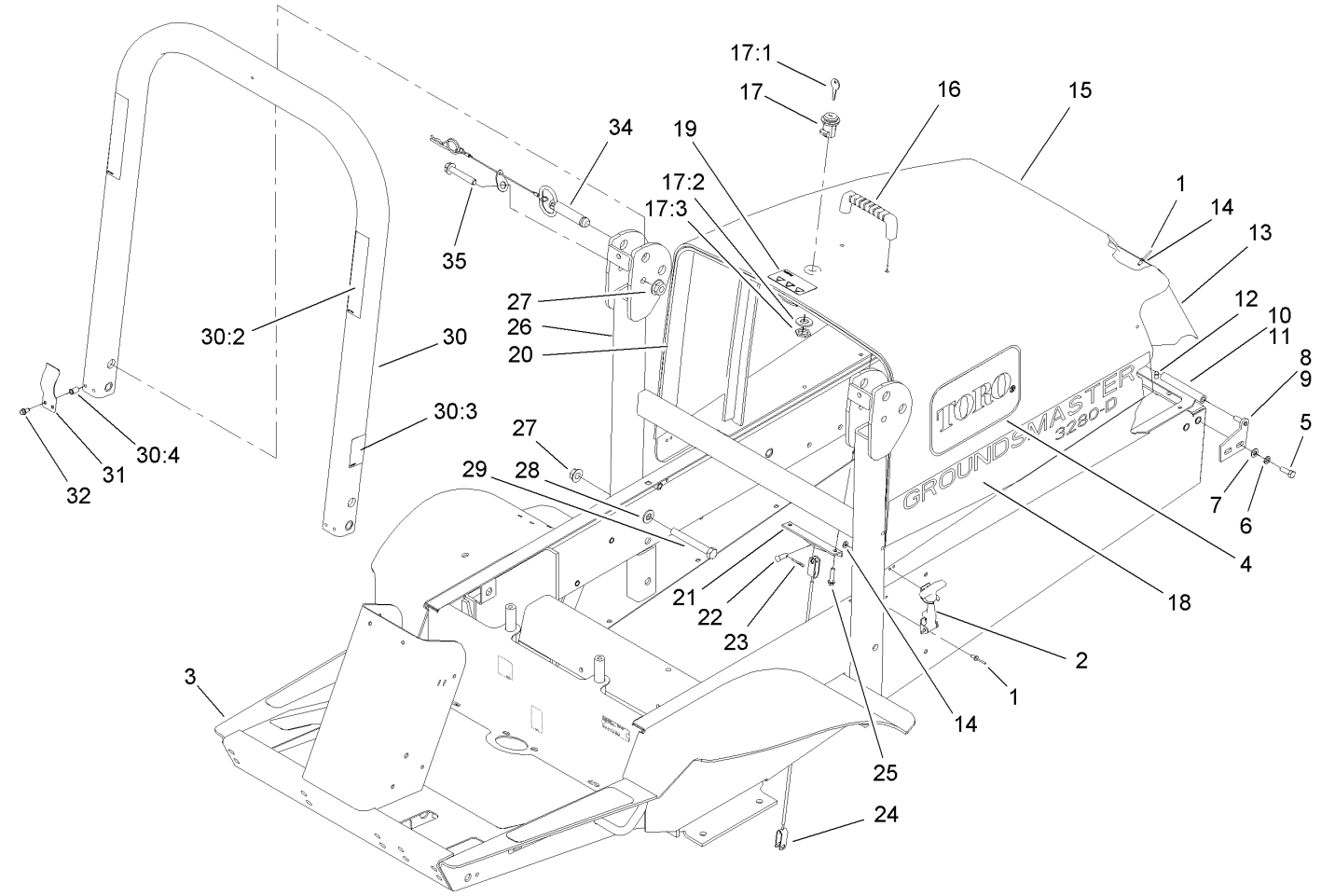

Frame and Hood Assembly

Ref	Part No.	Qty.	Description
1	3269-4	18	Rivet-Pop
2	95-6339	2	Latch
3	108-2010	1	Frame ASM
4	66-6140	2	Decal
5	322-5	4	Screw-HH
6	3253-4	4	Washer-Lock
7	3256-23	4	Washer-Flat
8	105-0003-01	1	RH Hinge Pin ASM
9	105-0004-01	1	LH Hinge Pin ASM
10	105-4278-03	1	LH Hood Hinge ASM
11	105-4277-03	1	RH Hood Hinge ASM
12	3290-412	12	Rivet
13	105-0006-03	1	Screen-Hood
14	3256-14	14	Washer-Flat
15	104-3485	1	Hood
16	65-5100	1	Handle-Door
17	98-9315	1	Latch-Locking
17:1	99-8350	2	Key-Latch, Locking
❷17:2		1	Washer-Switch
❷17:3		1	Nut-Switch
18	108-2067	2	Decal
19	106-6754	1	Decal-Danger
20	105-3651	1	Strip-Foam
21	105-0088-03	1	Bracket-Cable, Hood

Ref	Part No.	Qty.	Description
22	283-58	2	Pin-Clevis
23	3272-10	2	Pin-Cotter
24	105-3650	1	Cable-Hood
25	46-8092	2	Screw-Plastite
26	110-5693-03	1	Lower ROPS ASM
27	32128-23	6	Nut-HF
28	3256-26	4	Washer-Flat
29	325-18	4	Screw-HH
30	110-5690	1	Upper ROPS ASM
30:2	108-2073	2	Decal-Warning
30:3	108-2074	1	Decal-ROPS
30:4	32148-11	4	Insert-Threaded
31	110-5696	2	Spring-Leaf
32	32144-10	4	Screw-HWH
34	103-4553	2	ROPS Fold Pin ASM
35	325-13	2	Screw-HH

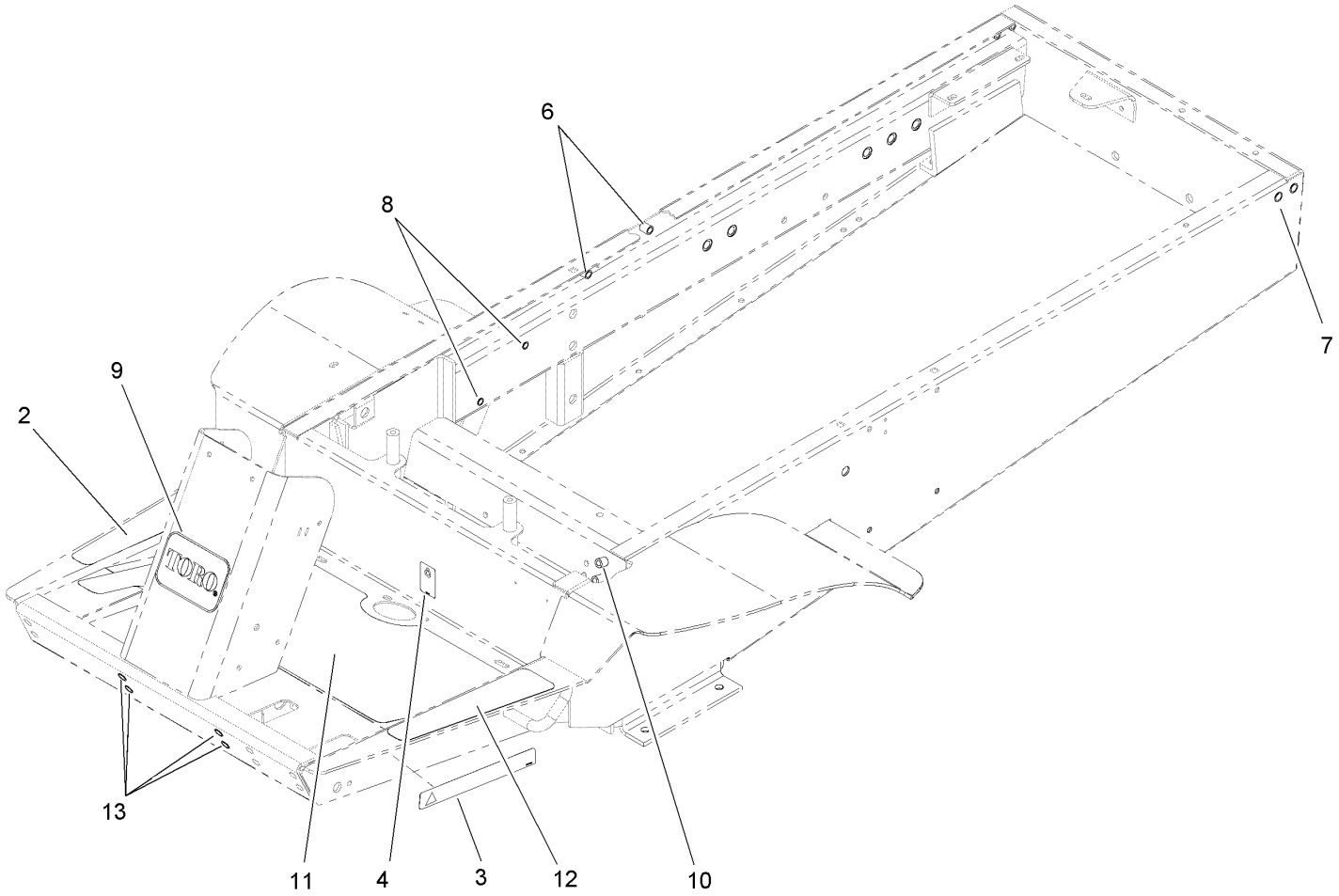

Frame Assembly No. 108-2010

Ref	Part No.	Qty.	Description
2	93-7834	1	Decal-Footrest, RH
3	106-9206	2	Decal-Torque, Wheel
4	93-6686	1	Decal-Oil, HYD
6	32148-9	2	Insert-Nut
7	32148-7	4	Nut-Insert
8	32148-11	2	Insert-Threaded
9	67-1300	1	Decal
10	32148-8	4	Insert-Threaded
11	105-7160	1	Pad-Floor
12	66-3200	1	Tread-Footrest, LH
13	32148-10	4	Insert-Nut

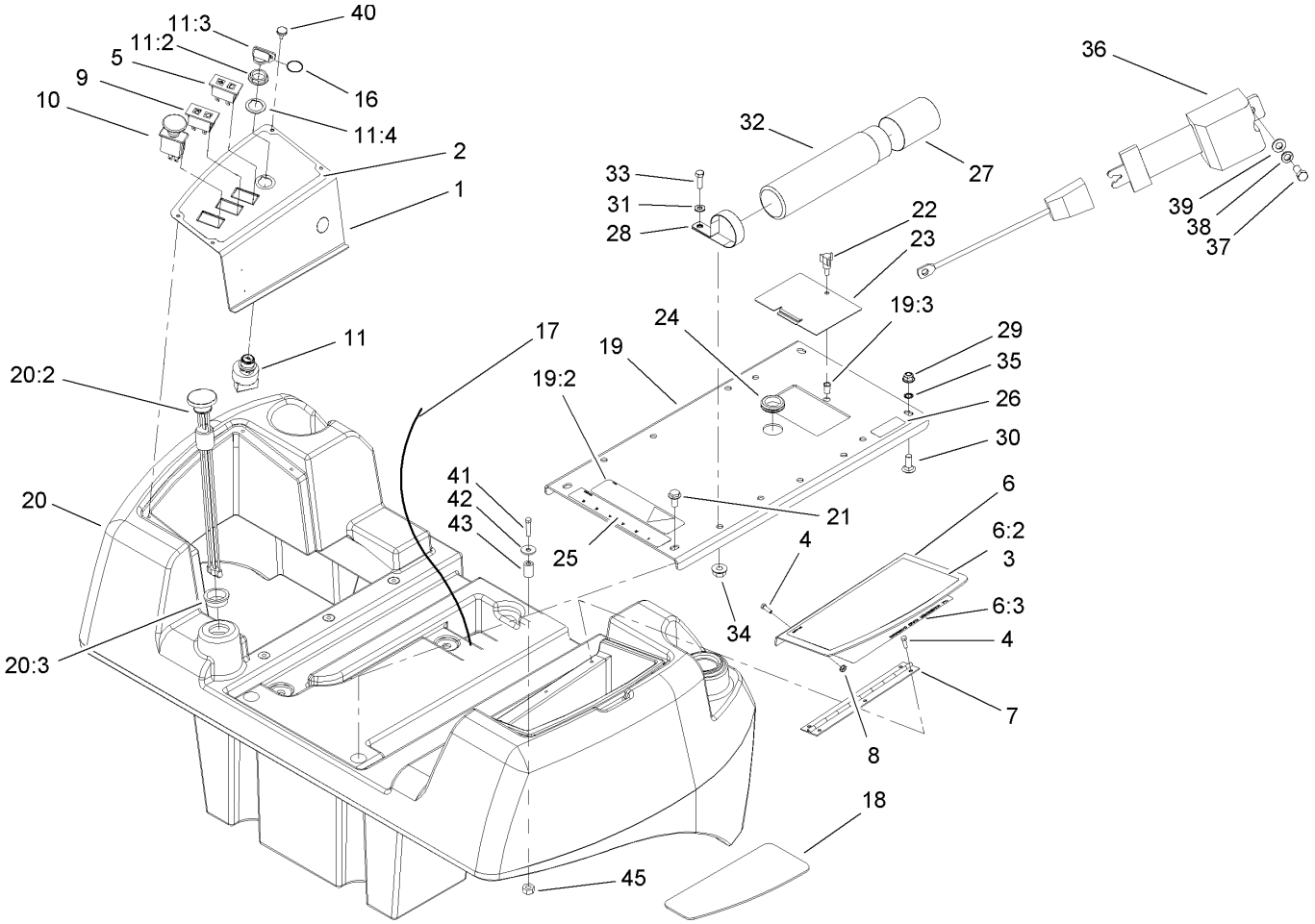

Fuel Tank and Control Panel Assembly

Ref	Part No.	Qty.	Description
1	108-2017-03	1	Plate-Panel, Control
2	108-2018	1	Decal-Panel, Control
3	108-6585	1	Decal-Danger
4	112-6349	6	Screw-HWH
5	100-8070	1	Lamp-Warning
6	108-6581	1	Cover ASM
6:2	114-2855	1	Decal-Danger
6:3	108-6583	1	Decal-Service
7	108-2024	1	Hinge
8	32149-8	3	Nut-Keps
9	100-8071	1	Lamp-Warning
10	93-9999	1	Switch-PTO
11	106-5269	1	Ignition Switch ASM
11:2	108-8660	1	Nut-Mounting
11:3	106-5270	1	Key Set-Ignition
11:4	108-8659	1	Washer-Backup
16	98-9321	1	Ring-Key
17	108-8657	1	Harness-Wire, Seat
18	108-2013	1	Pad-Rubber
19	108-6580	1	Seat Plate ASM
19:2	93-7841	1	Decal-Warning
19:3	32148-6	1	Insert-Nut
20	108-6596	1	Fuel Tank ASM
20:2	108-2025	1	Gauge-Fuel

Ref	Part No.	Qty.	Description
20:3	95-8972	1	Grommet
21	3234-1	2	Screw-HHF
22	233-70	1	Knob-Star, Three
23	108-2027-03	1	Cover-Bypass
24	240-5	1	Grommet-Rubber
25	105-2511	1	Decal-Instructions, Starting
26	114-9600	1	Decal-Low Sulfur
27	104-7048	1	Cap-Housing
28	2412-133	2	R-Clamp
29	104-8301	2	Nut-Flange, NI
30	3231-2	2	Screw-CARR
31	3256-23	2	Washer-Flat
32	104-7050	1	Housing-Manual
33	322-5	2	Screw-HH
34	32128-20	2	Nut-HF
35	32151-72	2	Ring-Retaining
36	100-4928	1	Belt-Seat
37	3212-4	2	Screw-HH
38	3253-6	2	Washer-Lock
39	3256-25	2	Washer-Flat
40	108-8689	4	Screw-Thumb
41	321-9	1	Screw-HH
42	3256-55	1	Washer-Flat
43	108-9688	1	Spacer

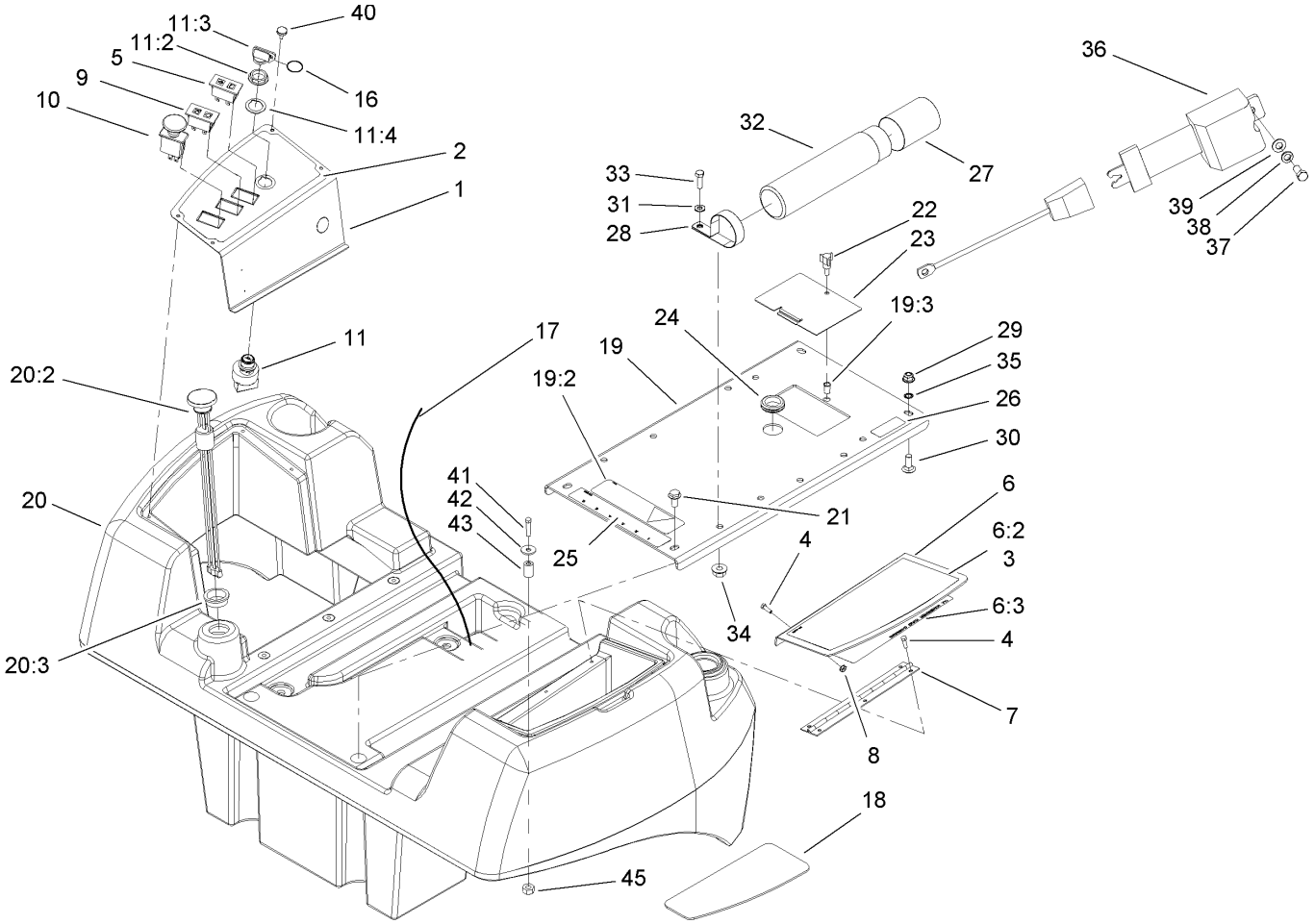

Fuel Tank and Control Panel Assembly (continued)

Ref	Part No.	Qty.	Description
45	3296-42	1	Nut-Lock, NI

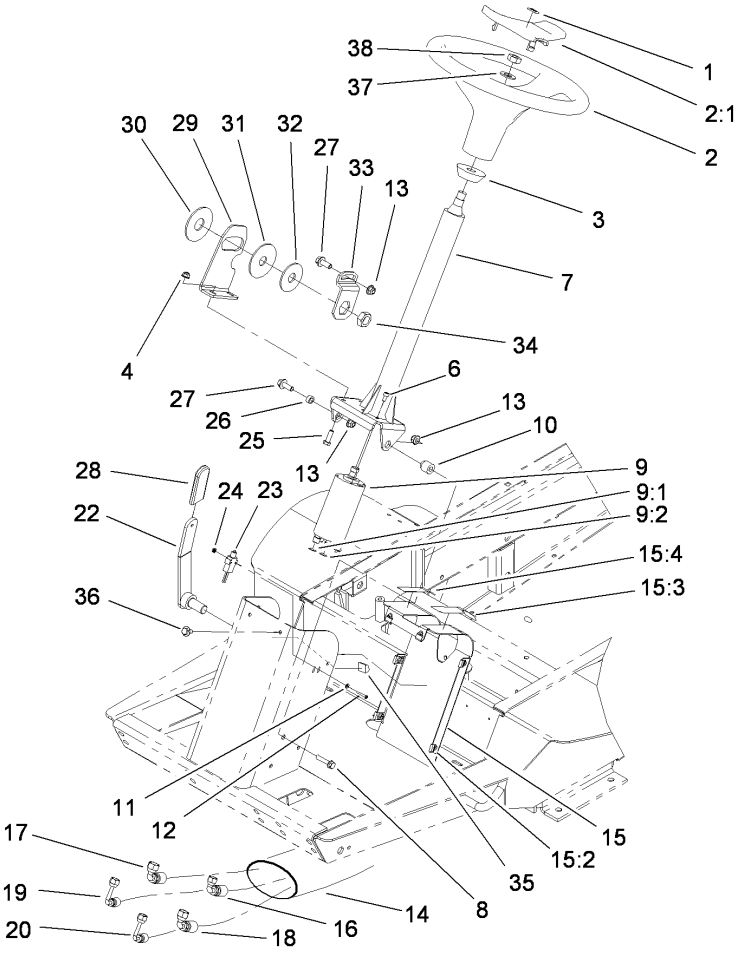

Power Steering Assembly

Ref	Part No.	Qty.	Description
1	98-1459	1	Decal
2	98-1471	1	Wheel-Steering
2:1	98-1468	1	Cover-Wheel, Steering
3	21-9260	1	Cover-Dust
4	104-8300	2	Nut-Flange, NI
6	105-2409	4	Screw-HSH
7	114-2884	1	Column ASM
8	3234-18	1	Screw-HHF
9	108-2077	1	Steering Valve ASM
9:1	237-21	3	O-Ring
9:2	237-22	2	O-Ring
10	105-7166	1	Spacer
11	3256-53	2	Washer-Flat
12	3250-35	2	Screw-PPH
13	104-8301	3	Nut-Flange, NI
14	44-8530	1	Protector-Sleeve
15	105-7180	1	Tower Panel ASM
15:2	105-7170	6	Nut-Retainer
15:3	105-7179	1	Decal-Brake, Parking
15:4	82-8940	1	Decal-Steering, Tilt
16	108-2089	1	Hose ASM
17	108-2081	1	Hose ASM
18	108-2080	1	Hose ASM
19	108-2086	1	Hose ASM

Ref	Part No.	Qty.	Description
20	108-2087	1	Hose ASM
22	108-6092	1	Lever-Tilt Steering
23	99-3410	1	Switch
24	32149-6	2	Nut-Keps
25	322-5	2	Screw-HH
26	80-2960	1	Spacer-Tower
27	3234-42	2	Screw-HHF
28	21-1880	1	Grip-Handle
29	105-7181-03	1	Plate-Pivot
30	31-0390	1	Disc-Friction
31	82-9010	1	Disc-Friction
32	80-2930	1	Washer-Flat
33	80-2880	1	Bracket-Tilt
34	3218-7	1	Nut-Jam
35	105-7188	2	Clamp-Adhesive
36	3250-32	6	Screw-PPH
37	3256-27	1	Washer-Flat
38	3296-33	1	Nut-Lock, NI

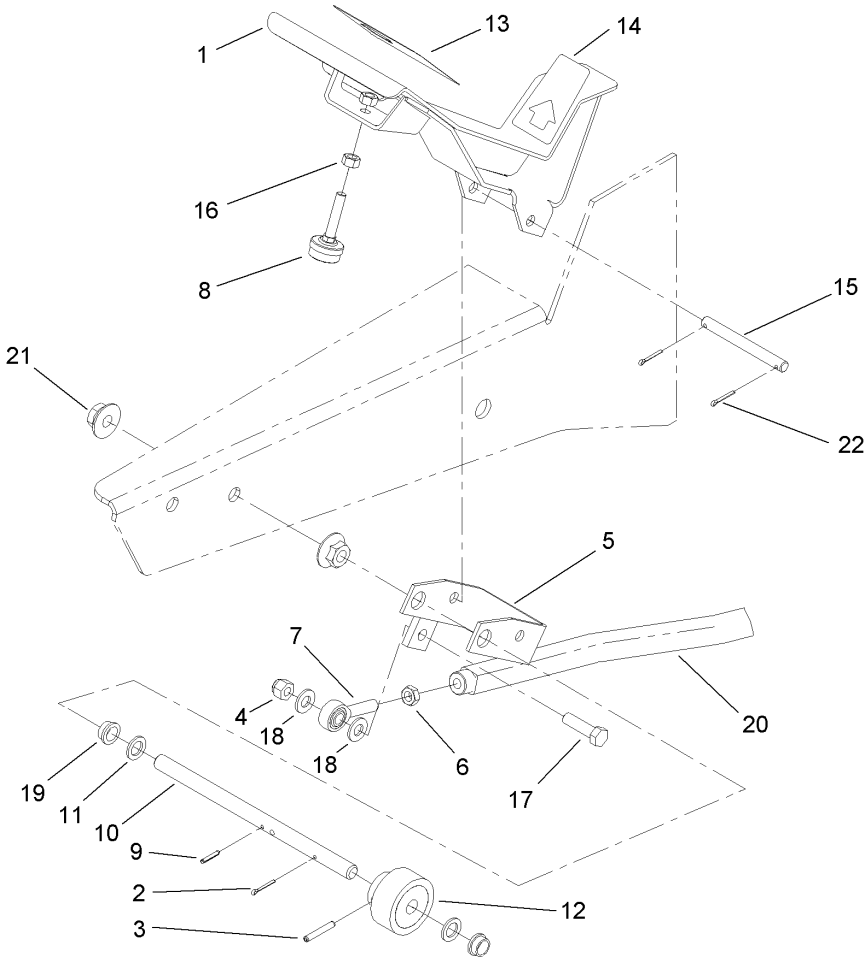

Traction Pedal Assembly

Ref	Part No.	Qty.	Description
1	105-7150-03	1	Pedal ASM
2	3272-6	1	Pin-Cotter
3	32121-6	1	Pin-Roll, Slotted
4	3296-39	1	Nut-Lock, NI
5	92-8854-03	1	Bracket-Pivot
6	3220-3	1	Nut-HJ
7	2411-36	1	Bearing-End, Rod
8	32141-36	1	Screw-Adjustment, Level
9	32121-50	1	Pin-Spring
10	92-5534	1	Shaft-Pedal, Traction
11	5-7570	2	Washer-Flat
12	28-5220	1	Friction Wheel ASM
13	94-3307	1	Pad-Pedal, Traction
14	94-3308	1	Pad-Pedal, Traction
15	92-5537	1	Pin-Pedal, Traction
16	3217-6	2	Nut-Hex
17	323-29	1	Screw-HH
18	3256-24	2	Washer-Flat
19	256-156	2	Bushing-Flange
20	108-8661-03	1	Traction Rod ASM
21	32128-56	2	Nut-HF
22	3272-10	2	Pin-Cotter

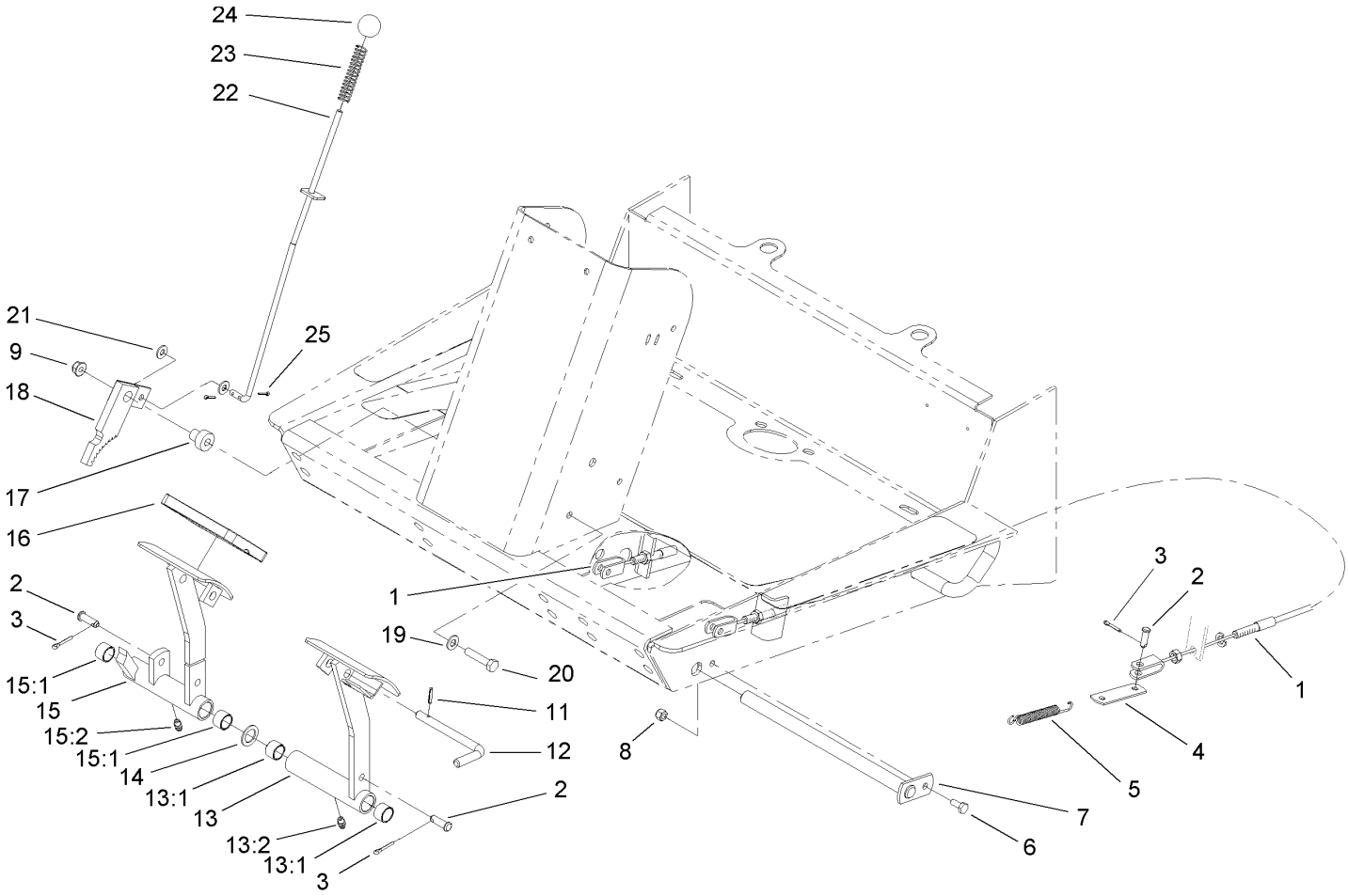

Brake Pedal Assembly

Ref	Part No.	Qty.	Description
1	108-6556	2	Cable-Brake
2	283-58	4	Pin-Clevis
3	3272-10	4	Pin-Cotter
4	63-6750	2	Link-Cable, Brake
5	3-7243	2	Spring-Extension
6	321-4	1	Screw-HH
7	63-6210-03	1	Pin-Brake
8	3296-42	1	Nut-Lock, NI
9	104-8300	1	Nut-Flange, NI
11	32121-50	1	Pin-Spring
12	63-7880	1	Pin-Latch, Brake
13	63-6180	1	Pedal-Brake, LH
13:1	256-42	2	Bushing
13:2	302-5	1	Fitting-Grease
14	3256-69	2	Washer-Flat
15	63-6190	1	Pedal-Brake, RH
15:1	256-42	2	Bushing
15:2	302-5	1	Fitting-Grease
16	93-8742	2	Footpad-Brake
17	105-7156	1	Spacer
18	63-7900-03	1	Rack ASM
19	3256-23	1	Washer-Flat
20	322-7	1	Screw-HH
21	3256-22	2	Washer-Flat

Ref	Part No.	Qty.	Description
22	105-7168	1	Rod ASM
23	71-8310	1	Spring-Compression
24	233-17	1	Knob
25	3272-5	2	Pin-Cotter

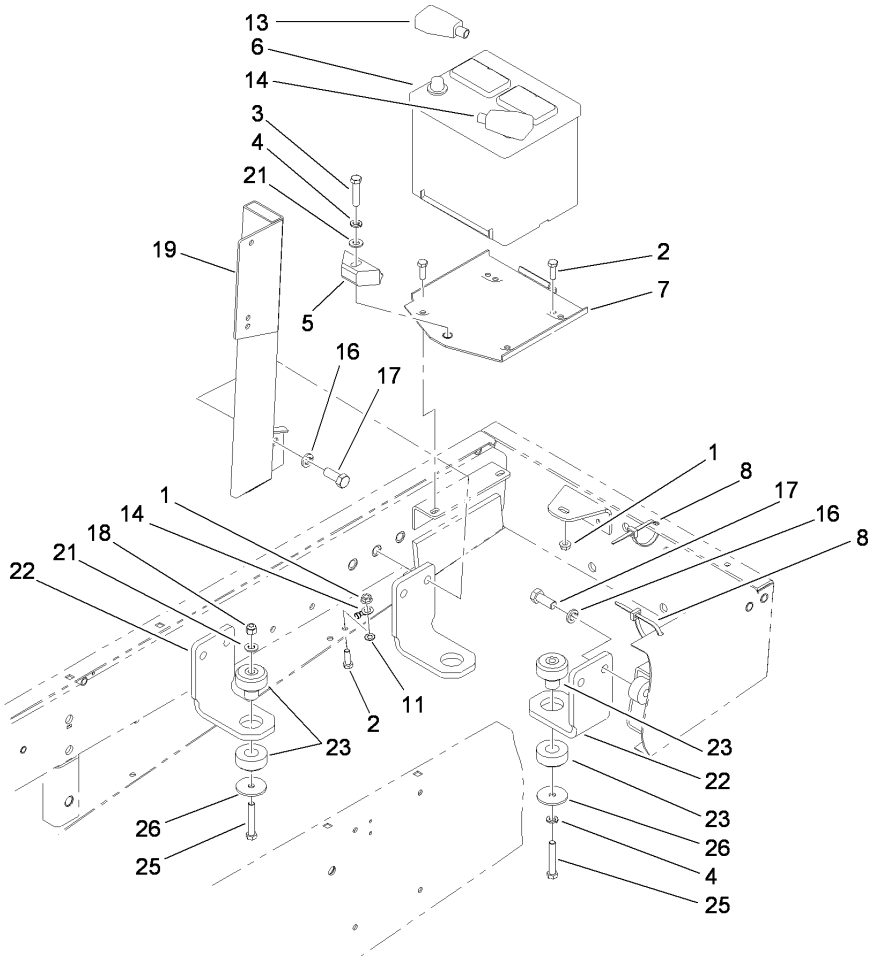

Battery and Engine Mount Assembly

Ref	Part No.	Qty.	Description
1	32128-20	4	Nut-HF
2	322-5	4	Screw-HH
3	323-9	1	Screw-HH
4	3253-21	2	Washer-Lock
5	66-2490	1	Retainer-Battery
6	106-5187	1	Battery
7	94-7343	1	Battery Base ASM
8	3290-378	2	Tie-Cable
11	3255-8	1	Washer-Lock
13	104-0086	1	Cable-Battery, Positive
14	105-0040	1	Cable-Battery, Negative
16	3253-7	8	Washer-Lock
17	3213-2	8	Screw-HH
18	3296-39	3	Nut-Lock, NI
19	105-2513-03	1	Air Cleaner Mount ASM
21	3256-24	4	Washer-Flat
22	114-2867-03	4	Bracket-Mount, Engine
23	115-0600	4	Mount-Engine
25	323-13	4	Screw-HH
26	63-7400	4	Washer-Rebound

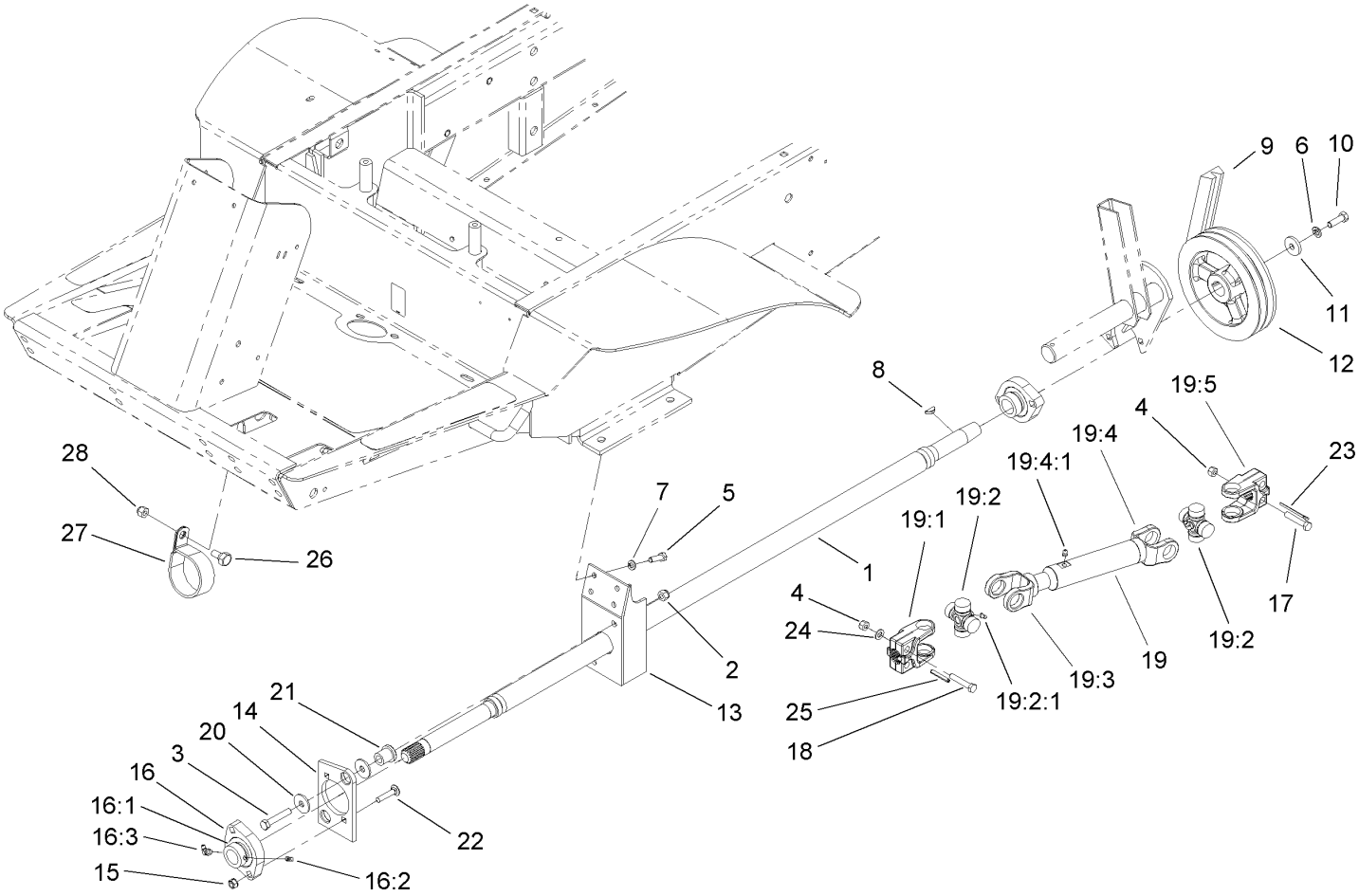

Power-Take-Off and Shaft Assembly

Ref	Part No.	Qty.	Description
1	92-8855-03	1	Shaft-PTO
2	3296-39	2	Nut-Lock, NI
3	323-10	2	Screw-HH
4	3296-29	5	Nut-Lock, NI
5	322-5	4	Screw-HH
6	3253-21	1	Washer-Lock
7	3253-4	4	Washer-Lock
8	3257-5	1	Key-Woodruff
9	63-6240	1	V-Belt
10	323-18	1	Screw-HH
11	29-4730	1	Washer-Flat
12	43-5320-03	1	Pulley-PTO
13	92-8751-03	1	PTO Bearing Bracket ASM
14	84-7580	1	Plate-Support, Bushing
15	32149-1	2	Nut-Keps
16	92-8799	1	Bearing-Flange
16:1	251-77	1	Collar-Lock, Bearing
16:2	3245-35	1	Screw-Set
16:3	302-40	1	Fitting-Grease
17	322-9	4	Screw-HH
18	322-14	1	Screw-HH
19	108-1366	1	PTO Drive Shaft ASM
19:1	54-9040	1	Yoke-End
19:2	54-9180	2	U-Joint Kit

Ref	Part No.	Qty.	Description
19:2:1	62-3820	1	Fitting-Grease
19:3	108-6550	1	Shaft-Yoke, Slip
19:4	108-6551	1	Tube-Yoke, Slip
19:4:1	302-58	1	Fitting-Straight
19:5	54-9090	1	Yoke-End
20	63-8410	4	Washer
21	63-9750	2	Mount
22	3230-4	2	Screw-CARR
23	3272-15	1	Pin-Cotter
24	3256-23	1	Washer-Flat
25	32121-34	1	Pin-Roll
26	46-3380	1	Bolt-Shoulder
27	2412-102	1	Clamp-R
28	3296-39	1	Nut-Lock, NI

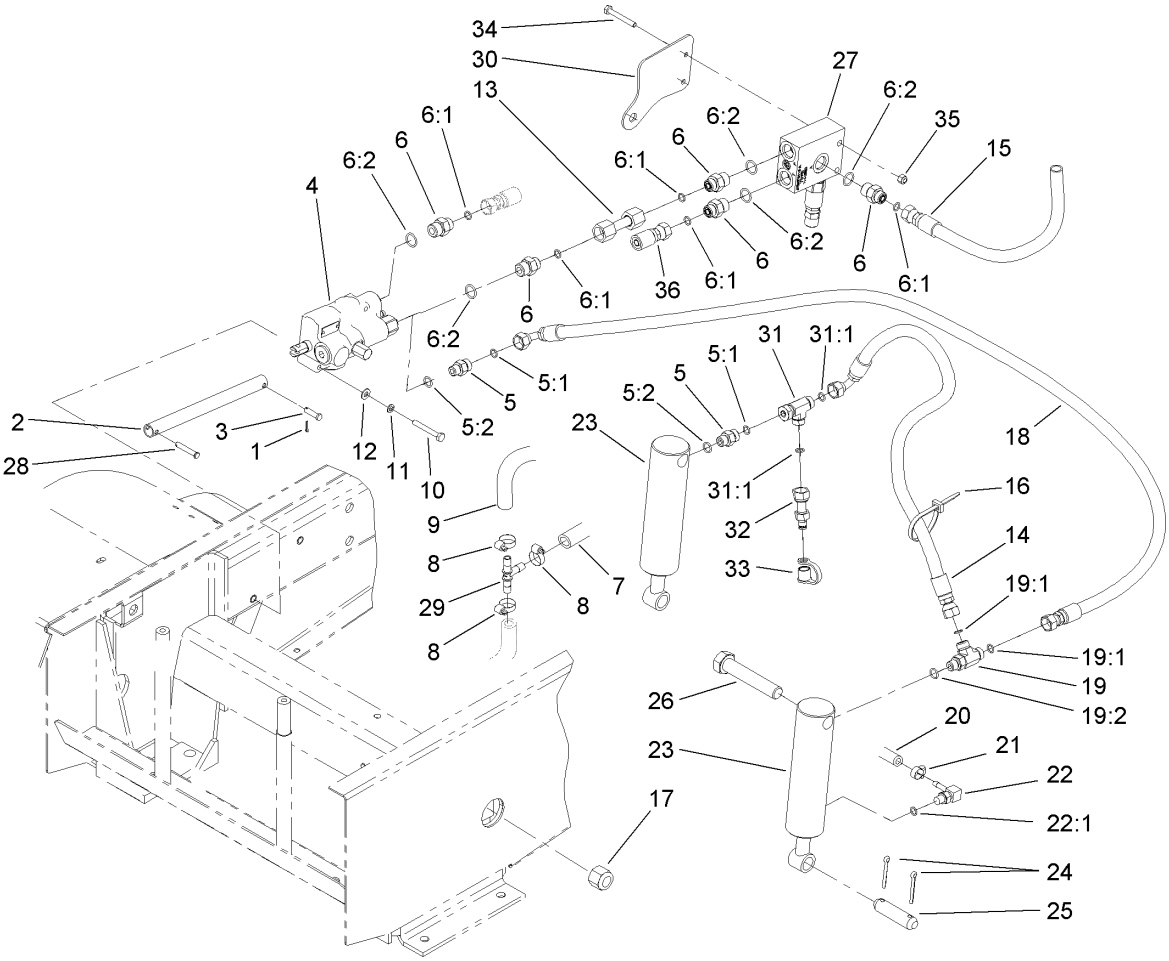

Hydraulic Cylinder and Lift Arm Assembly

Ref	Part No.	Qty.	Description
1	3272-5	2	Pin-Cotter
2	108-2021-03	1	Tube-Link
3	283-26	1	Pin
4	114-2877	1	Valve ASM
5	340-2	2	Fitting-HYD, Straight
5:1	237-22	1	O-Ring
5:2	237-42	1	O-Ring
6	340-3	5	Adapter
6:1	237-22	1	O-Ring
6:2	237-79	1	O-Ring
7	100-5641	1	Hose ASM
8	2412-36	3	Clamp-Hose
9	100-5649	1	Hose
10	321-18	2	Screw-HH
11	3253-3	2	Washer-Lock
12	3256-22	2	Washer-Flat
13	114-2869	1	HYD Tube ASM
14	108-2083	1	Hose ASM
15	108-2088	1	Hose ASM
16	3290-378	2	Tie-Cable
17	3296-51	2	Nut-Lock, NI
18	108-2082	1	Hose ASM
19	340-86	1	Fitting-HYD, Tee
19:1	237-22	2	O-Ring

Ref	Part No.	Qty.	Description
19:2	237-42	1	O-Ring
20	92-5082	2	Hose-HYD
21	2412-108	2	Clamp-Worm
22	304-99	2	Stem-Hose
22:1	237-78	1	O-Ring
23	63-6630	2	Cylinder-HYD
24	3272-23	4	Pin-Cotter
25	27-4240	2	Pin-Cylinder
26	328-7	2	Screw-HH
27	114-2863	1	Manifold ASM
28	283-66	1	Pin-Clevis
29	354-107	1	Fitting-HYD, Tee
30	114-2870-03	1	Bracket-Mounting
31	340-115	1	Fitting-Tee
31:1	237-22	2	O-Ring
32	86-5480	1	Nipple-Test
33	354-79	1	Cap-Dust
34	321-11	2	Screw-HH
35	32128-33	2	Nut-HF
36	100-5589	1	Hose ASM

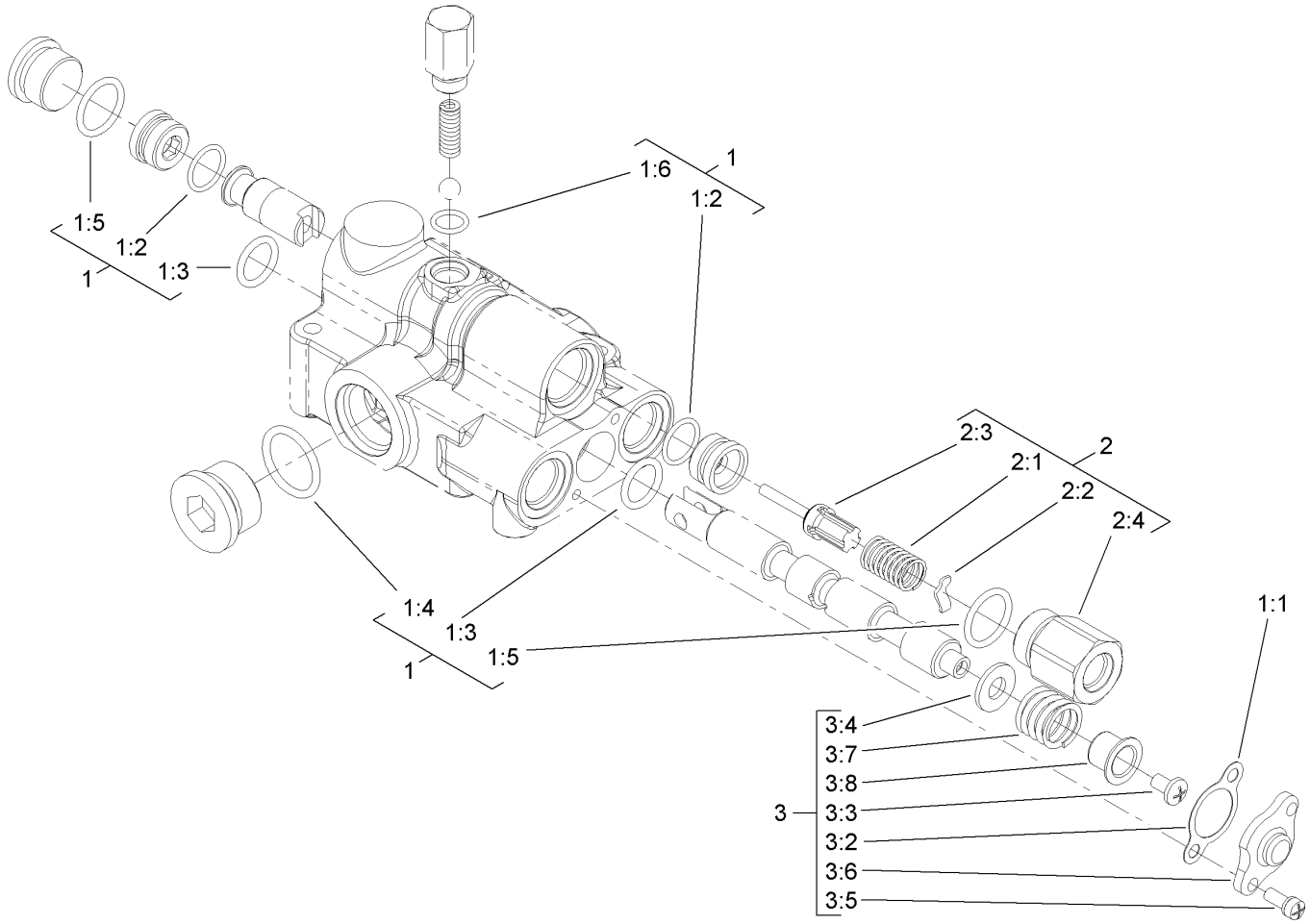

Hydraulic Valve Assembly No. 114-2877

Ref	Part No.	Qty.	Description
1	110-6442	1	Seal Kit
❷1:1		1	Gasket
❷1:2		2	O-Ring
❷1:3		2	O-Ring
❷1:4		1	O-Ring
❷1:5		2	O-Ring
❷1:6		1	O-Ring
2	110-6441	1	Pilot Check Kit
❷2:1		1	Spring
❷2:2		1	Poppet-Stop
❷2:3		1	Poppet
❷2:4		1	Port-Plug, Adapter
3	114-2889	1	Spring Center Kit
❷3:2		1	Gasket
❷3:3		1	Machine Screw
❷3:4		1	Washer
❷3:5		2	Screw W/Lockwasher
❷3:6		1	End Cap
❷3:7		1	Spring
❷3:8		1	Spacer

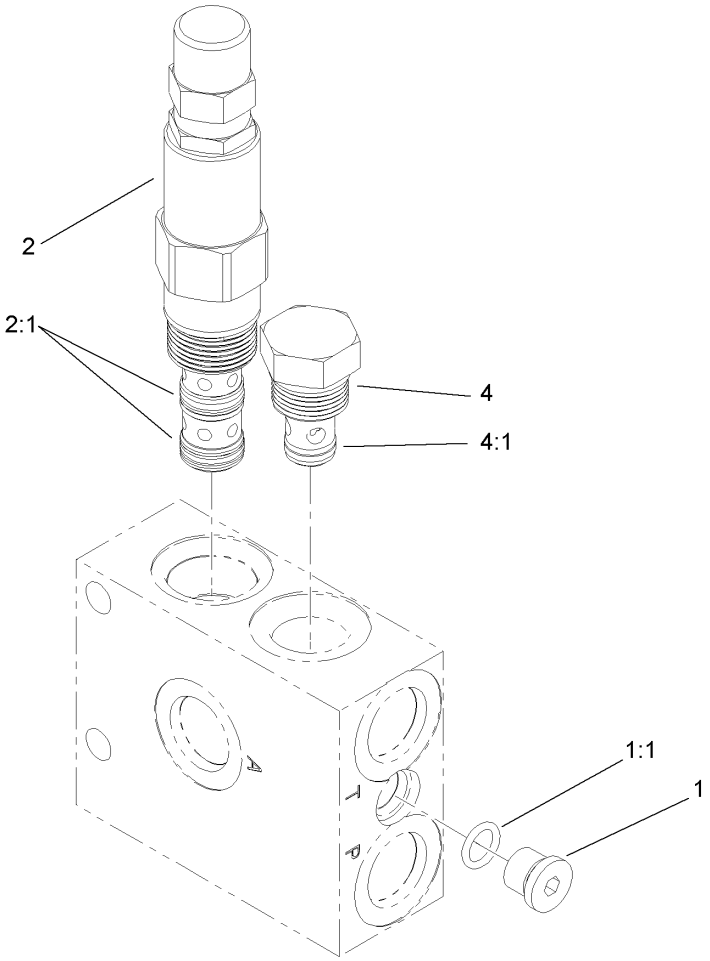

Hydraulic Manifold Assembly No. 114-2863

Ref	Part No.	Qty.	Description
1	353-990	1	Plug
1:1	237-78	1	O-Ring
2	114-2888	1	Valve-Logic, Adjustable
2:1	107-7813	1	Seal Kit
4	114-2873	1	Check Valve
4:1	105-9156	1	Seal Kit

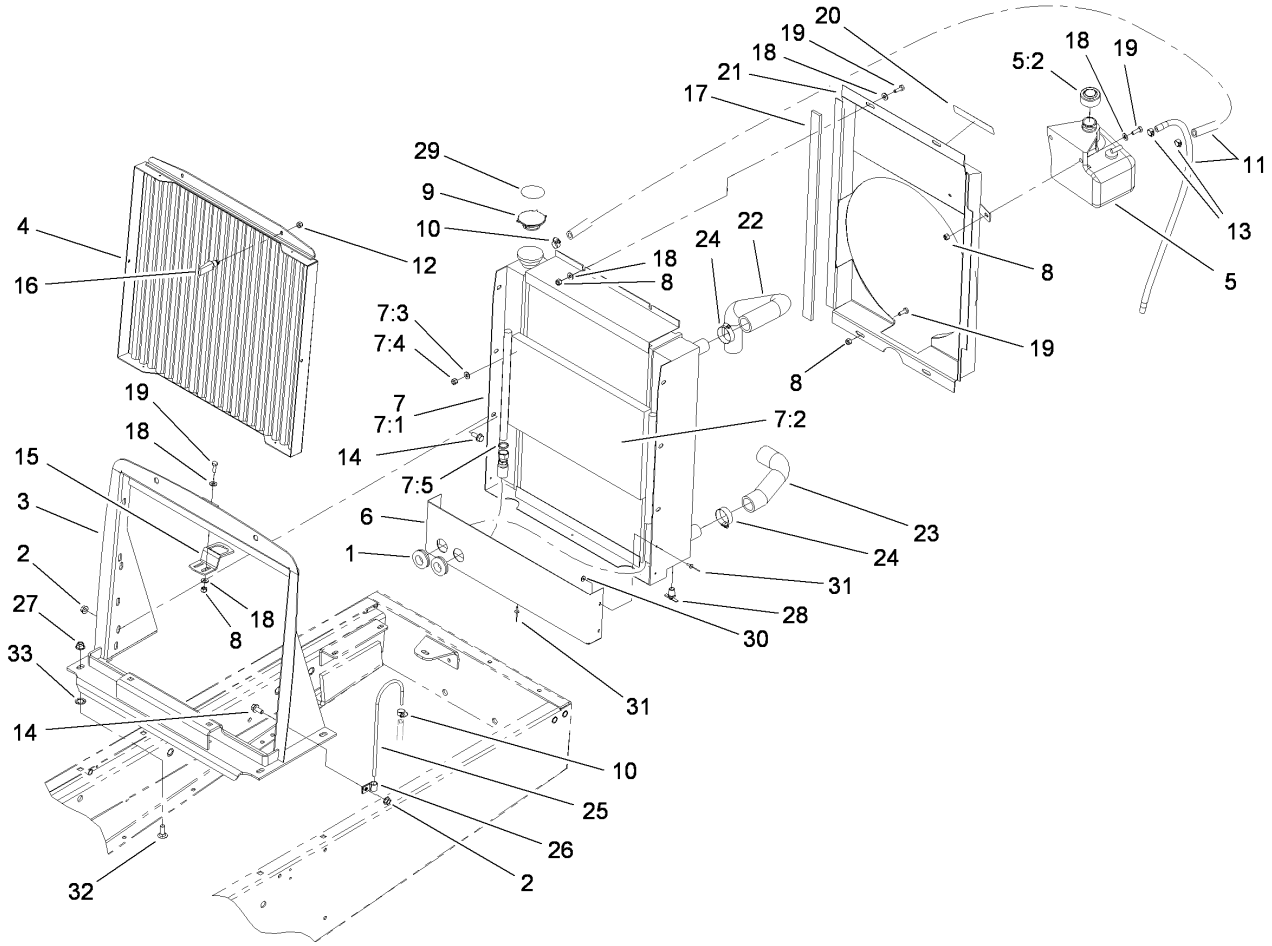

Radiator Assembly

Ref	Part No.	Qty.	Description
1	240-4	2	Grommet-Rubber
2	32128-20	6	Nut-HF
3	110-9668-03	1	Radiator Support ASM
4	108-2062-03	1	Screen ASM
5	93-5975	1	Coolant Reservior ASM
5:2	93-5960	1	Cap-Reservoir
6	110-9663-03	1	Shield-Radiator, Bottom
❷7		1	Radiator / Oil Cooler ASM
7:1	105-4289	1	Radiator
7:2	105-4290	1	Cooler-Oil
7:3	3253-4	4	Washer-Lock
7:4	3217-6	4	Nut-Hex
7:5	237-22	2	O-Ring
8	3296-42	8	Nut-Lock, NI
9	66-3240	1	Cap-Radiator
10	2412-108	2	Clamp-Worm
11	110-4103	2	Hose-Fuel
12	1-804254	2	Nut
13	2412-98	2	Clamp
14	3234-5	6	Screw-HHF
15	98-9316	1	Latch-Hood
16	74-5950	2	Latch-Swell
17	108-9683	2	Strip-Foam
18	3256-22	14	Washer-Flat

Ref	Part No.	Qty.	Description
19	321-4	8	Screw-HH
20	93-7272	1	Decal-Warning
21	108-9678-03	1	Fan Shroud ASM
22	104-3443	1	Hose-Radiator, Upper
23	104-3442	1	Hose-Radiator, Lower
24	2412-34	4	Clamp-Hose
25	66-3180	1	Tube-Vent
26	2412-103	2	Clamp
27	104-8301	4	Nut-Flange, NI
28	304-46	1	Draincock
29	106-5976	1	Decal-Warning
30	3269-10	2	Washer-Back
31	3269-13	5	Rivet-Pop
32	3231-2	4	Screw-CARR
33	32151-72	4	Ring-Retaining

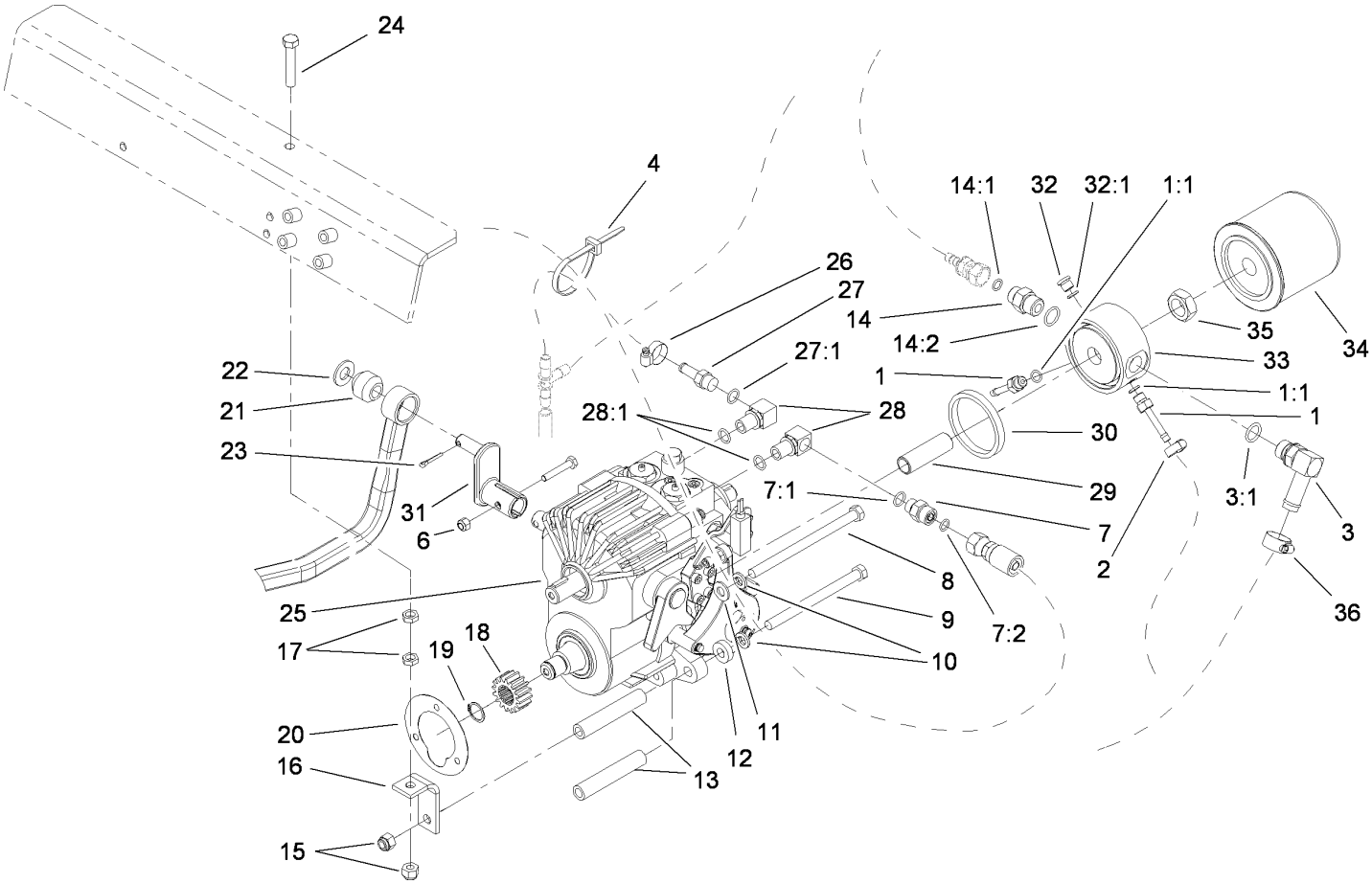

Transmission Installation Assembly

Ref	Part No.	Qty.	Description
1	92-5512	2	Fitting-Hose, Barbed
1:1	237-78	1	O-Ring
2	2412-108	2	Clamp-Worm
3	92-5086	1	Fitting-Elbow, 90 DEG
3:1	237-79	1	O-Ring
4	3290-378	2	Tie-Cable
6	3296-42	1	Nut-Lock, NI
7	82-8530	1	Fitting-Straight
7:1	237-42	1	O-Ring
7:2	237-22	1	O-Ring
8	27-9620	1	Screw-HH
9	323-39	3	Screw-HH
10	3253-21	4	Washer-Lock
11	3256-24	1	Washer-Flat
12	5-0652	1	Spacer
13	27-3680	4	Spacer-Mounting
14	340-3	1	Adapter
14:1	237-22	1	O-Ring
14:2	237-79	1	O-Ring
15	3296-39	2	Nut-Lock, NI
16	63-7170	1	Anchor-Transmission
17	3218-3	2	Nut-Jam
18	86-7220	1	Gear-Pinion
19	32120-72	1	Ring-Snap

Ref	Part No.	Qty.	Description
20	27-3690	1	Gasket-Transmission
21	23-2270	1	Bushing-Rubber
22	3256-26	1	Washer-Flat
23	3272-10	1	Pin-Cotter
24	67-1900	1	Screw-HH
25	108-1355	1	Transmission ASM
26	2412-36	1	Clamp-Hose
27	353-979	1	Fitting-Straight
27:1	237-42	1	O-Ring
28	66-3110	2	Fitting-HYD, 90 DEG
28:1	237-42	1	O-Ring
29	92-5085	1	Union-Filter
30	92-5087	1	Seal-Adaptor, Filter
31	112-5098	1	Pump Lever
32	353-990	1	Plug
32:1	237-78	1	O-Ring
33	92-5076	1	Adapter-Filter
34	23-2300	1	Filter-Oil, Transmission
35	3220-7	1	Nut-Jam
36	2412-119	1	Clamp-Worm

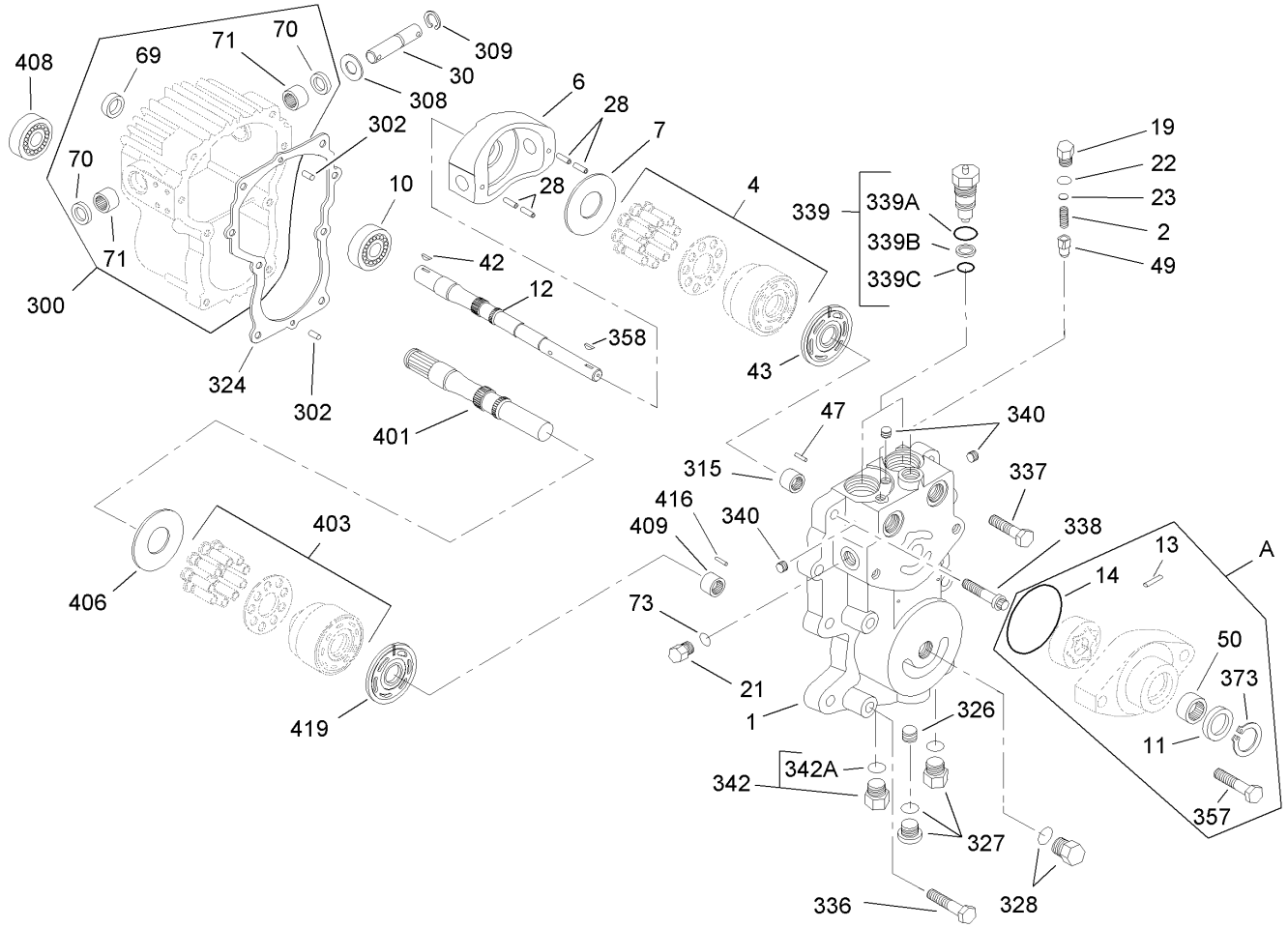

Center Section Assembly
Transmission Assembly No. 108-1355

Ref	Part No.	Qty.	Description
A	38-2670	1	Charge Pump Kit
1	92-5716	1	Section-Center
2	46-7310	1	Spring
4	48-1800	1	Cylinder Block Kit
6	25-2450	1	Plate-Swash, Variable
7	25-2380	1	Plate-Thrust
10	251-8	1	Bearing-Ball
11	94-2975	1	Seal-Shaft
12	28-3640	1	Shaft-Pump
13	38-2680	1	Pin
14	28-3520	1	O-Ring
19	25-2460	1	Plug-HH
21	25-2460	1	Plug-HH
22	28-3400	1	O-Ring
23	25-2470	1	Pack-Shim
28	83-3880	4	Pin-Spring
30	28-3670	1	Shaft-Trunnion
42	3257-5	1	Key-Woodruff
43	110-3051	1	Plate-Valve
47	25-2430	1	Pin-Dowel
49	67-8070	1	Cone-Relief, Charge
50	28-3480	1	Bearing
69	93-4133	1	Seal-Lip
70	103461	2	Seal

Ref	Part No.	Qty.	Description
71	252-82	2	Bearing-Needle
73	28-3400	1	O-Ring
300	110-3052	1	Housing ASM
302	353-599	2	Pin-Dowel
308	25-2510	1	Washer-Flat
309	32151-46	1	Ring-Retaining
315	25-3300	1	Bearing-Needle
324	28-3340	1	Gasket
326	107-4370	1	Plug-Expansion
327	67-9090	1	Plug ASM
328	28-3440	1	Plug-Threaded
336	323-10	4	Screw-HH
337	75-0110	2	Capscrew-HH
338	28-3530	2	Capscrew
339	49-7830	2	Check Valve Kit
340	75-0160	4	Plug-Pipe
342	28-3440	2	Plug-Threaded
357	92-1773	2	Screw-HHF
358	3257-5	1	Key-Woodruff
373	94-2976	1	Ring-Retaining
401	49-8200	1	Shaft-Motor
403	48-1800	1	Cylinder Block Kit
406	25-2380	1	Plate-Thrust
408	28-3300	1	Bearing-Roller

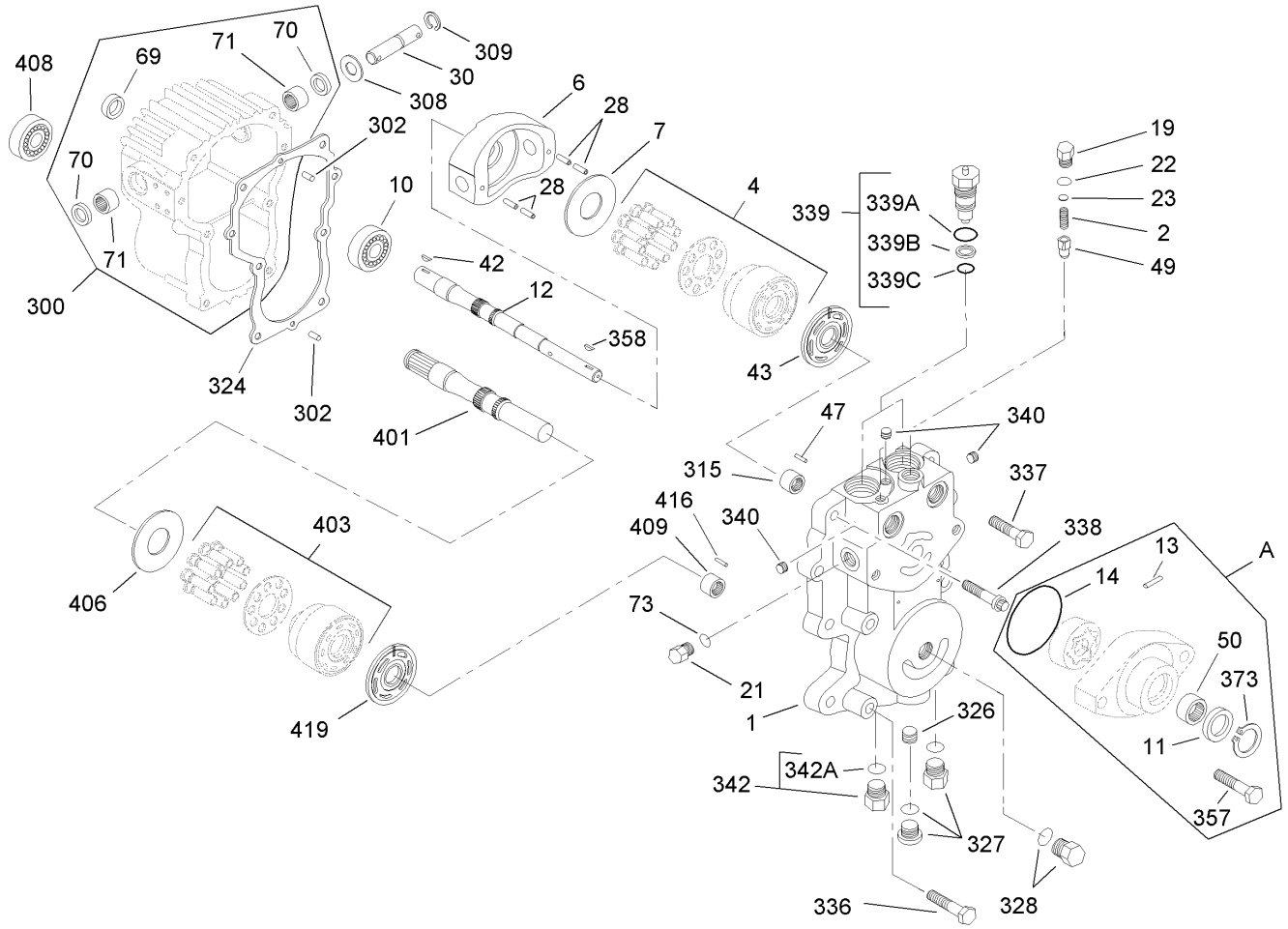

Center Section Assembly
Transmission Assembly No. 108-1355 (continued)

Ref	Part No.	Qty.	Description
409	25-3300	1	Bearing-Needle
416	25-2430	1	Pin-Dowel
419	28-3380	1	Plate-Valve, Motor
339A	28-3570	2	O-Ring
339B	28-3580	2	Ring-Back Up
339C	28-3590	2	O-Ring
342A	75-0240	2	O-Ring

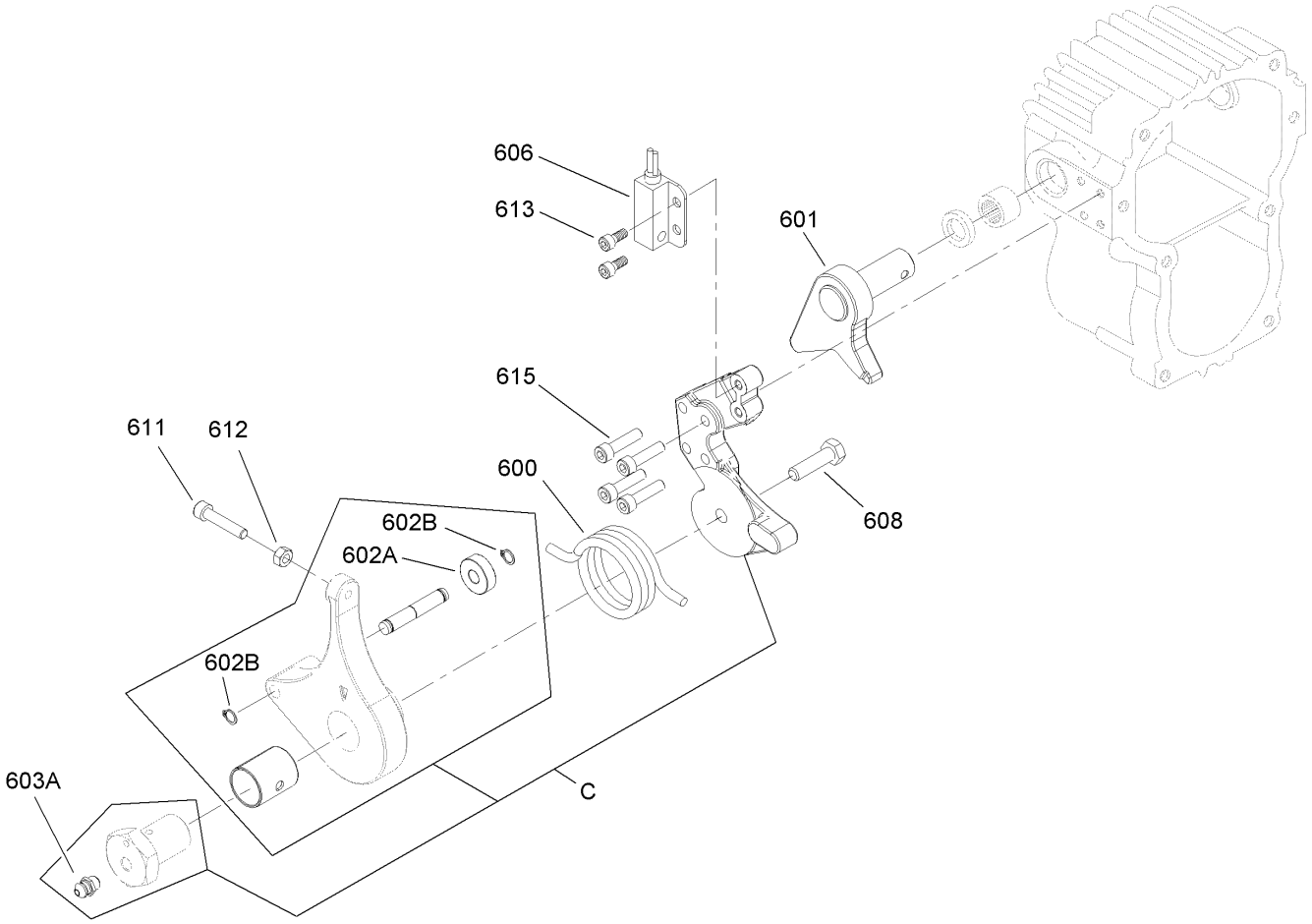

Neutral Return Arm Assembly
Transmission Assembly No. 108-1355

Ref	Part No.	Qty.	Description
C	110-5685	1	Neutral Return ASM
600	110-3053	1	Spring-Return, Neutral
601	110-3054	1	Cam-Trunnion
606	100-1270	1	Switch-Proximity
608	33114-030	1	Screw-HH
611	110-3060	1	Screw-HSH
612	33013-00	1	Nut-Hex
613	110-3061	2	Screw-HSH
615	48-7850	4	Capscrew
602A	251-259	1	Bearing-Ball
602B	110-3056	2	Ring-Retaining
603A	110-3058	1	Fitting-Lube

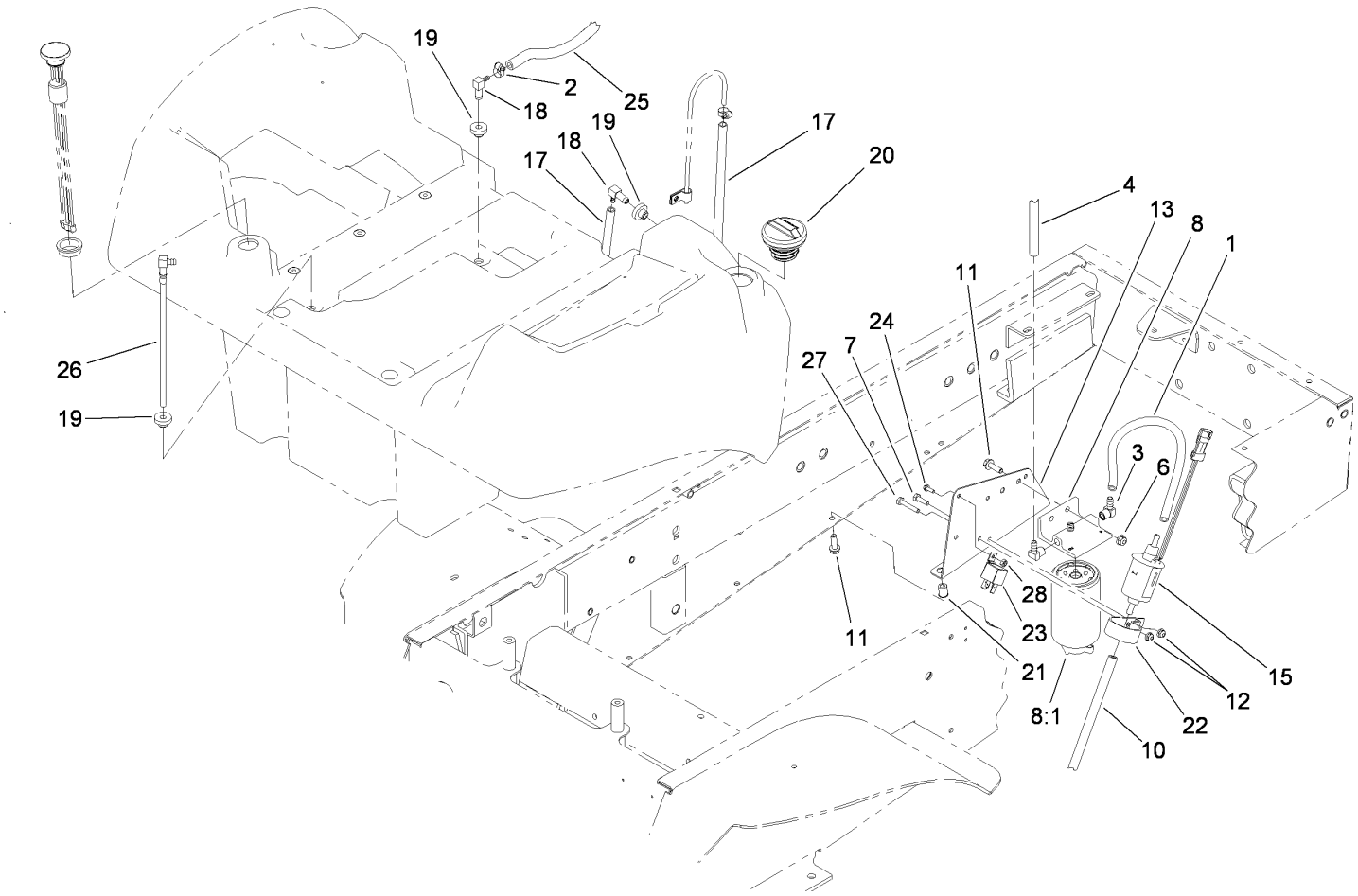

Fuel Delivery System Assembly

Ref	Part No.	Qty.	Description
1	110-4105	1	Hose-Fuel
2	2412-108	9	Clamp-Worm
3	353-781	2	Fitting-Elbow
4	106-1126	1	Hose-Fuel
6	104-8300	2	Nut-Flange, NI
7	321-5	1	Screw-HH
8	110-9044	1	Filter-Seperator
8:1	110-9049	1	Filter-Spin On
10	110-4172	1	Hose-Fuel
11	3234-17	4	Screw-HHF
12	104-7201	2	Nut-HF
13	114-2854-03	1	Bracket-Support
15	110-8806	1	Pump-Fuel
17	109-0273	1	Hose-Fuel
18	104-5228	2	Fitting-Elbow
19	46-6560	3	Bushing
20	114-5054	1	Cap-Biodiesel
21	32148-7	2	Nut-Insert
22	110-8817	1	Bracket-Pump, Fuel
23	99-7435	1	Relay-Power
24	32105-2	1	Screw-SHWH
25	108-9698	1	Hose-Fuel
26	110-9689	1	Pipe-Stand
27	321-9	1	Screw-HH

Ref	Part No.	Qty.	Description
28	3296-2	1	Nut-Lock

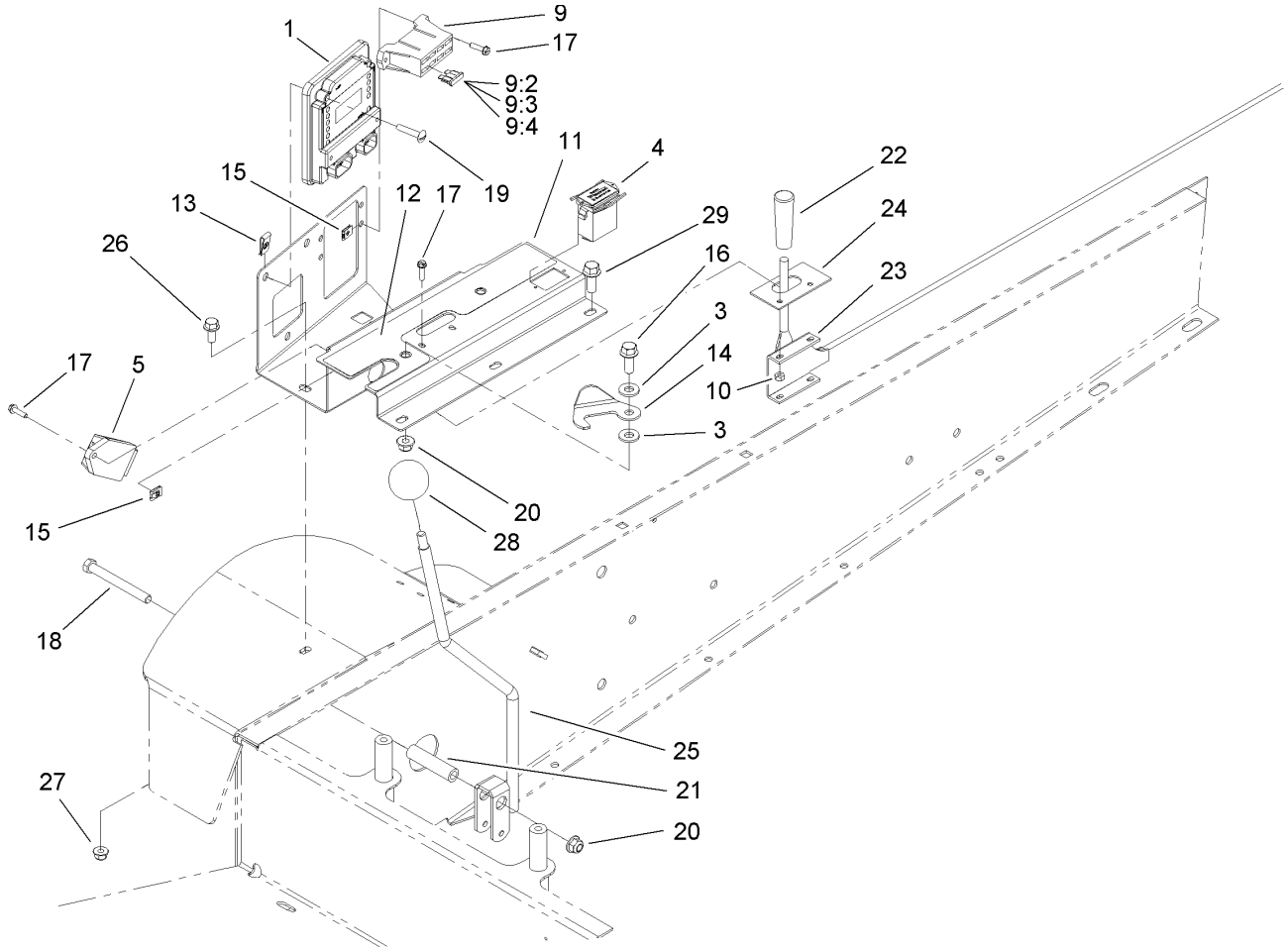

Lower Control Panel Assembly

Ref	Part No.	Qty.	Description
1	106-9277	1	Module-Control, Standard
3	66-2920	2	Washer-Friction
4	1-513374	1	Meter-Hour
5	98-7611	1	Controller-Glow
9	114-3398	1	Harness-Wire
9:2	94-6710	1	Fuse-Blade, 2 Amp
9:3	218-578	2	Fuse-10 Amp
9:4	109355	1	Fuse-15 Amp
10	3296-2	2	Nut-Lock
11	108-2030-03	1	Cover-Lower
12	108-2031	1	Decal-Panel, Lower
13	3290-199	3	Nut-Speed
14	108-2032	1	Latch-Lever
15	107-1013	8	Nut-Speed, U-Type
16	3234-11	1	Screw-HHF
17	32105-13	5	Screw-HWH
18	323-15	1	Screw-HH
19	3258-19	3	Screw
20	104-8301	2	Nut-Flange, NI
21	84-2350	1	Spacer-Long
22	233-39	1	Knob-Control
23	108-2033	1	Cable-Throttle, Diesel
24	108-2034-03	1	Plate-Throttle
25	108-2035-03	1	Lift Lever ASM

Ref	Part No.	Qty.	Description
26	3234-5	1	Screw-HHF
27	104-8300	1	Nut-Flange, NI
28	233-21	1	Knob
29	3234-14	3	Screw-HHF

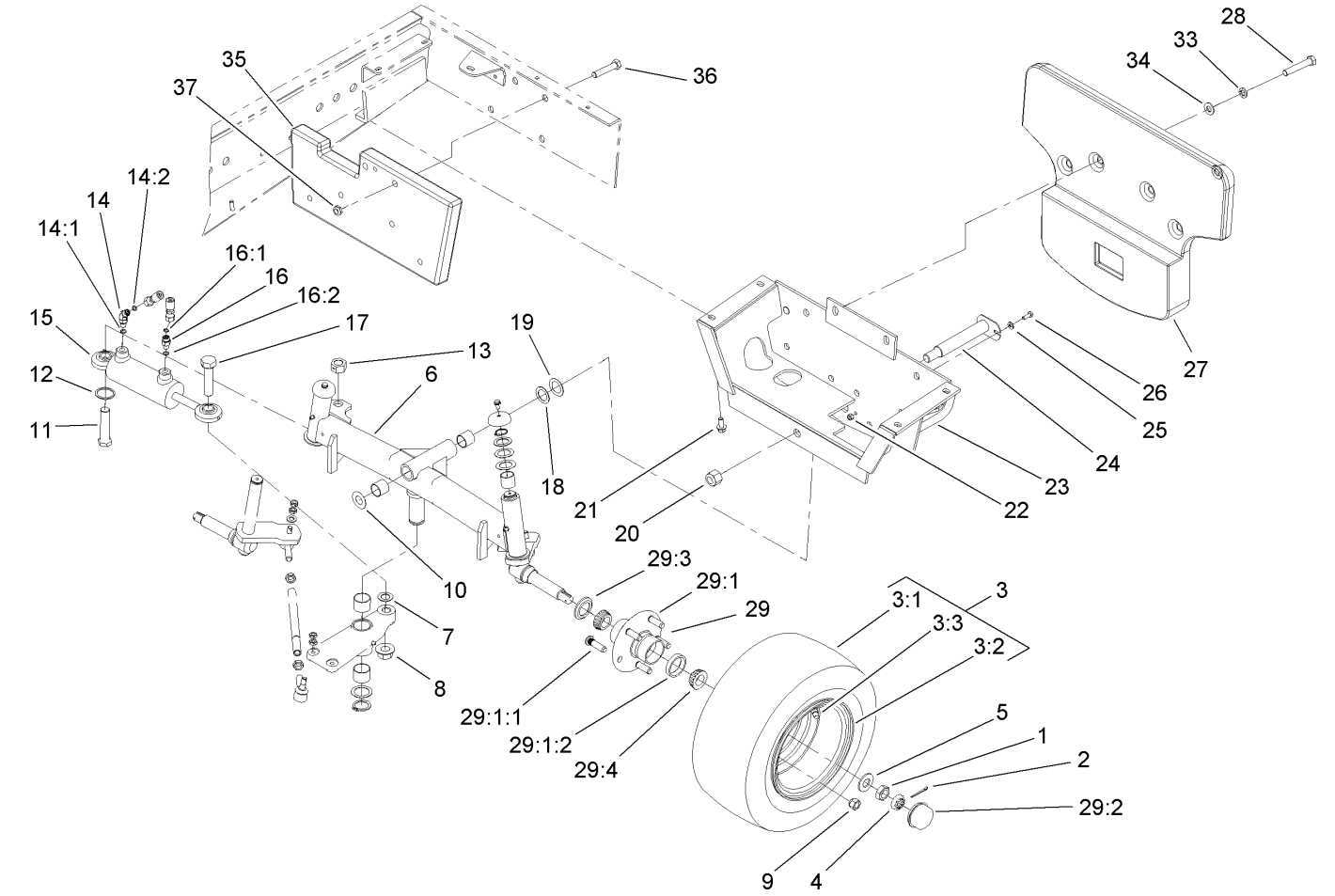

Rear Axle and Tire Assembly

Ref	Part No.	Qty.	Description
1	3220-7	2	Nut-Jam
2	3272-13	2	Pin-Cotter
❷3		2	Wheel And Tire ASM
3:1	231-105	1	Tire-Ribbed
3:2	107-9059	1	Wheel
3:3	232-35	1	Valve Stem And Cap ASM
4	93-0307	2	Nut-Lock, Retainer
5	93-0309	2	Washer-Tab
❷6		1	Rear Axle ASM
7	67-9410	1	Washer
8	32128-45	1	Locknut-Flange
9	242-50	10	Nut-Lug
10	71-4540	1	Washer-Thrust
11	67-7300	1	Screw-HH
12	67-7250	1	Spacer-Ring
13	32153-6	1	Nut-Lock
14	340-103	1	Fitting-HYD, 45 DEG
14:1	237-78	1	O-Ring
14:2	237-21	1	O-Ring
15	76-2070	1	Cylinder-Steering
16	340-92	1	Fitting-HYD, Straight
16:1	237-78	1	O-Ring
16:2	237-21	1	O-Ring
17	328-25	1	Screw-HH

Ref	Part No.	Qty.	Description
18	10-8110	1	Washer-Thrust
19	56-2460	2	Washer-Flat
20	3296-51	1	Nut-Lock, NI
21	3234-25	4	Screw-HHF
22	3296-42	1	Nut-Lock, NI
23	63-6430-03	1	Frame-Rear
24	63-6770-03	1	Pin-Masked
25	3256-22	1	Washer-Flat
26	321-4	1	Screw-HH
27	110-9666-01	1	Weight-Rear
28	325-14	4	Screw-HH
❷29		2	Hub ASM
29:1	21-2820	1	Hub
29:1:1	10-6830	5	Stud-Type, Drive
29:1:2	254-72	2	Bearing-Cup, Tapered
29:2	241-119	1	Cap-Dust
29:3	253-129	1	Seal
29:4	254-94	2	Bearing-Cone, Tapered
33	3253-7	4	Washer-Lock
34	3256-26	4	Washer-Flat
35	110-1995-03	1	Weight-Rear, Inside
36	325-10	2	Screw-HH
37	3296-45	2	Nut-Lock, NI

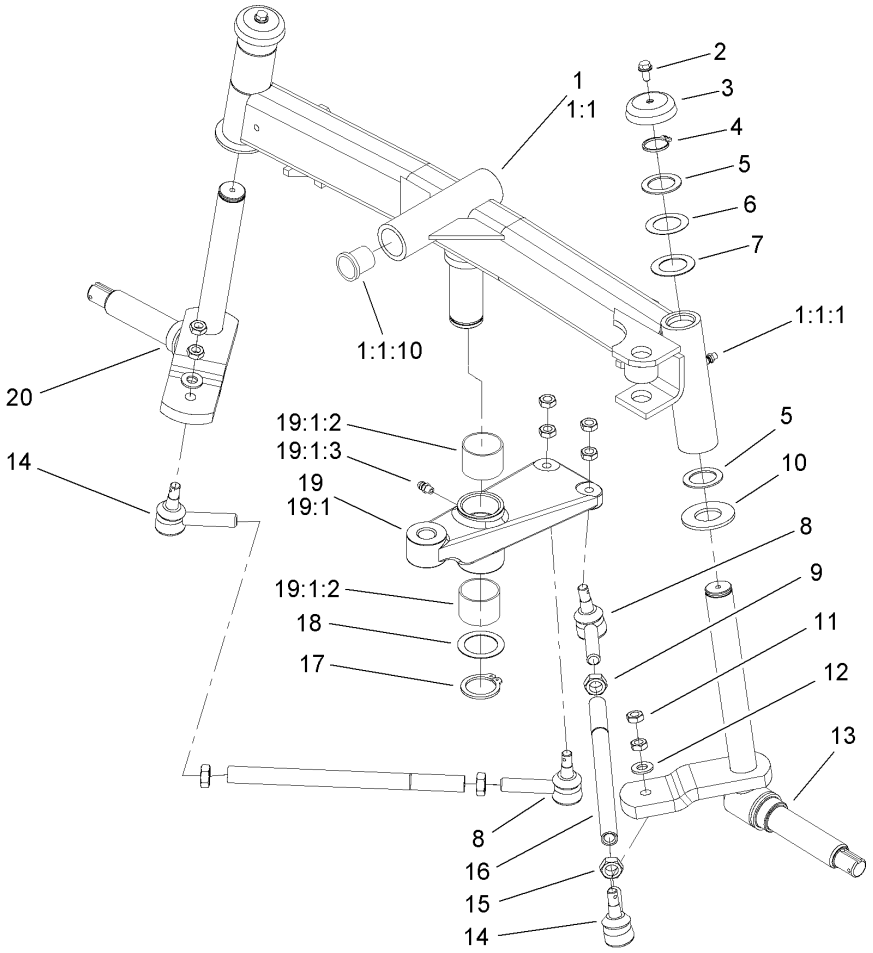

Rear Axle Assembly

Ref	Part No.	Qty.	Description
1	76-3000-03	1	Rear Axle ASM
❷1:1		1	Axle-Rear
1:1:1	302-5	3	Fitting-Grease
1:1:10	67-1750	6	Bushing
2	3234-13	2	Screw-HHF
3	66-2990-03	2	Cap-Spindle
4	32151-36	2	Ring-Retaining
5	10-8110	4	Washer-Thrust
6	56-2460	2	Washer-Flat
7	5-1226	2	Washer
8	110-9686-03	2	LH Ball Joint ASM
9	3220-12	2	Nut-HJ (LH Thread)
10	256-121	2	Washer-Thrust
11	3220-3	8	Nut-HJ
12	3256-24	2	Washer-Flat
13	107-2943-03	1	RH Spindle ASM
14	110-9685-03	2	RH Ball Joint ASM
15	3220-5	2	Nut-Jam
16	63-6880	2	Tie Rod-Steering
17	32151-77	1	Ring-Retaining, EXT
18	76-2980	1	Washer-Thrust
19	100-6598-03	1	Steering Pivot ASM
❷19:1		1	Pivot-Steering
19:1:2	76-2970	2	Bushing-Straight

Ref	Part No.	Qty.	Description
19:1:3	302-5	1	Fitting-Grease
20	107-2942-03	1	LH Spindle ASM

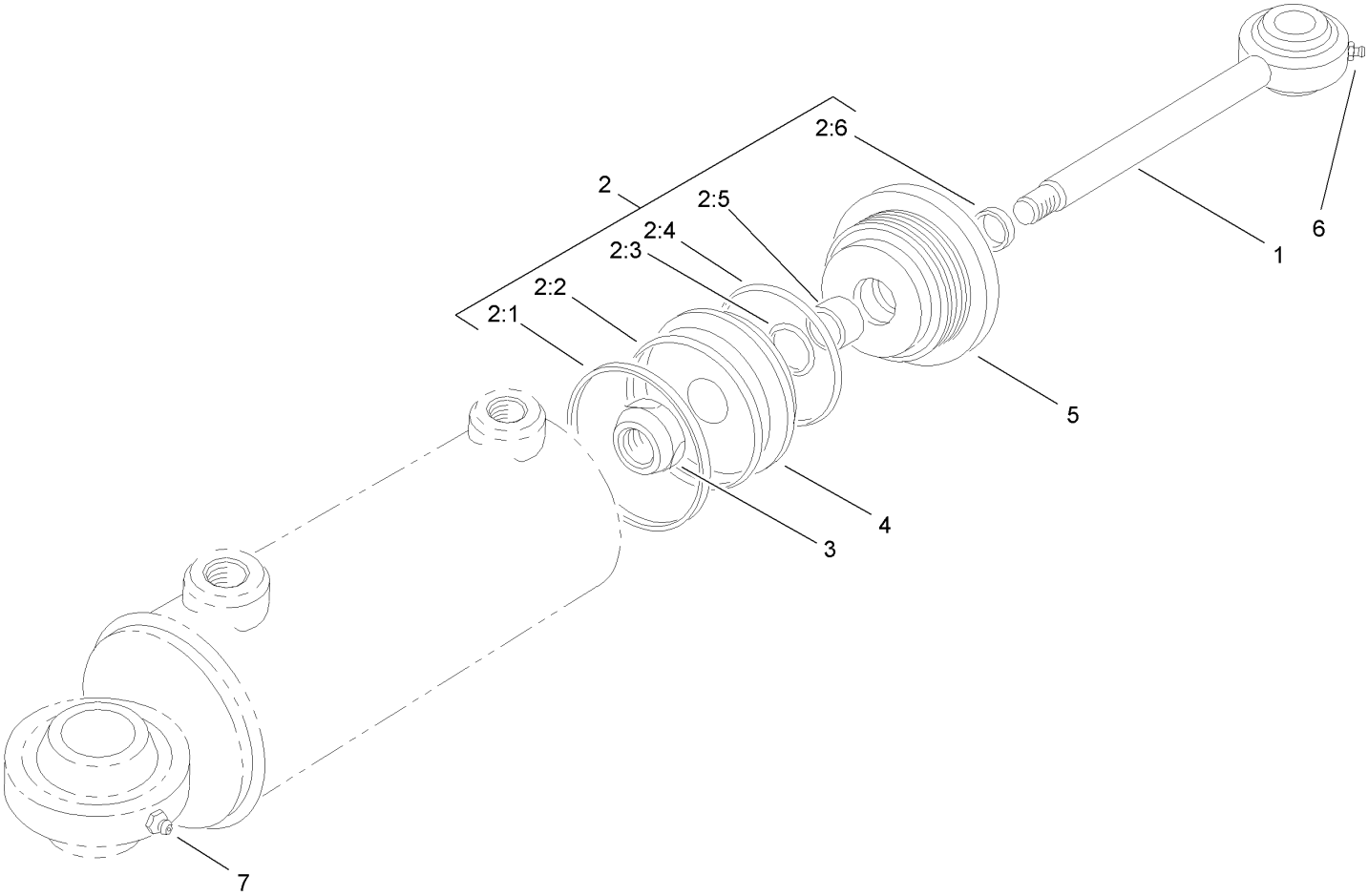

Steering Cylinder Assembly No. 76-2070

Ref	Part No.	Qty.	Description
❷1		1	Rod-Piston
2	76-2090	1	Seal Kit
❷2:1		1	Seal
❷2:2		1	O-Ring
❷2:3		1	O-Ring
❷2:4		1	O-Ring
❷2:5		1	U-Cup
❷2:6		1	Wiper
❷3		1	Nut-Lock
❷4		1	Piston
❷5		1	Gland
6	302-40	1	Fitting-Grease
7	302-5	1	Fitting-Grease

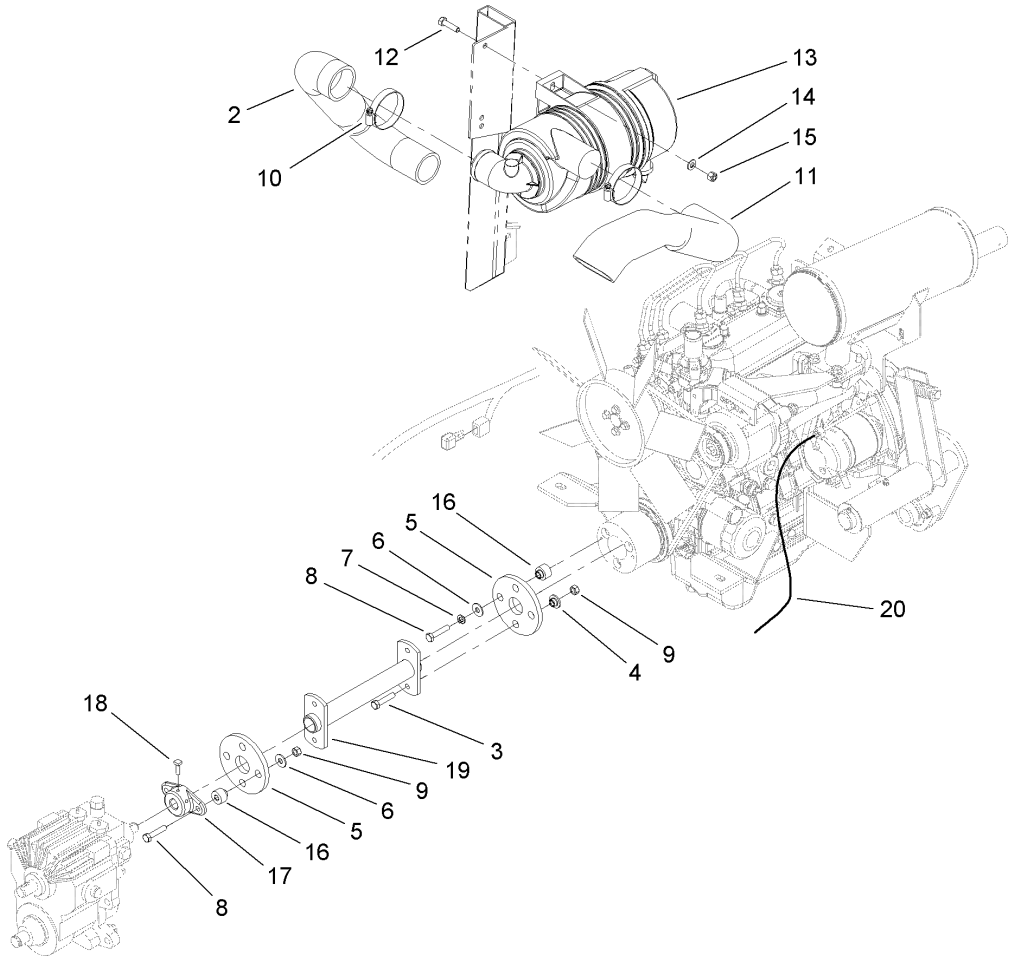

Air Cleaner and Drive Coupling Assembly

Ref	Part No.	Qty.	Description
2	104-3446	1	Hose-Outlet, Air
3	3210-5	4	Screw-HH
4	27-6600	4	Spacer-Coupling
5	44-2230	2	Coupling-Rubber
6	3256-71	4	Washer-Flat
7	3253-4	2	Washer-Lock
8	3210-8	4	Screw-HH
9	32152-5	6	Nut-Lock, Cone
10	2412-42	3	Clamp-Hose
11	104-3444	1	Hose-Inlet, Air
12	322-6	2	Screw-HH
13	104-3427	1	Air Cleaner ASM
14	3256-23	2	Washer-Flat
15	3296-29	2	Nut-Lock, NI
16	27-6590	4	Spacer-Coupling, Rubber
17	27-4370	1	Hub-Pump
18	3241-6	2	Screw-SQH
19	104-3401-03	1	Drive Shaft ASM
20	99-3441	1	Harness-Wire, Fusible Link

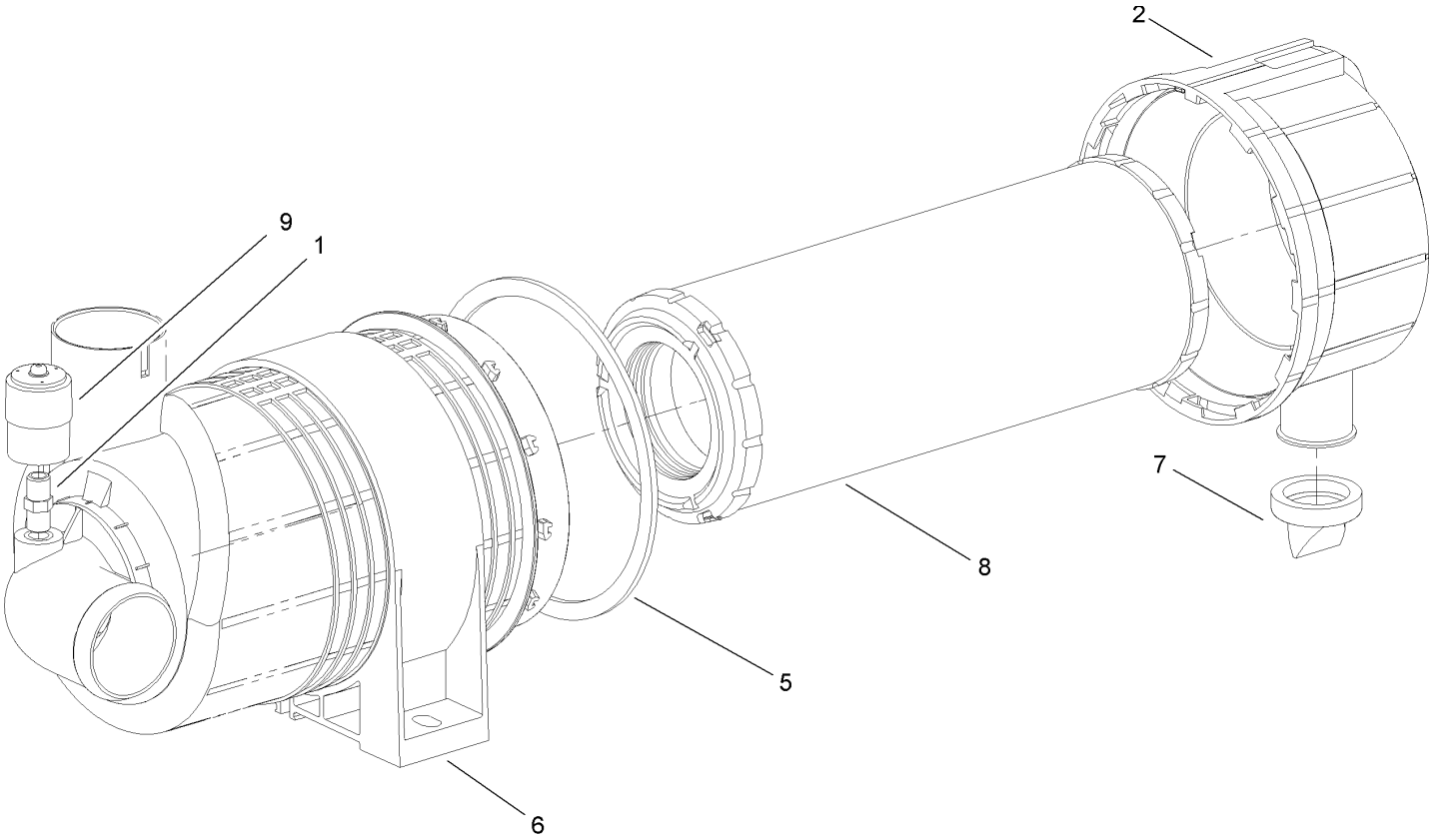

Air Cleaner Assembly No. 104-3427

Ref	Part No.	Qty.	Description
1	105-4292	1	Nipple-Pipe
2	104-0497	1	Cover ASM
5	104-4897	1	Gasket
6	98-4525	1	Bracket-Cleaner, Air
7	104-0498	1	Valve-Vacuator
8	108-3810	1	Filter-Air
9	93-9164	1	Indicator-Mini

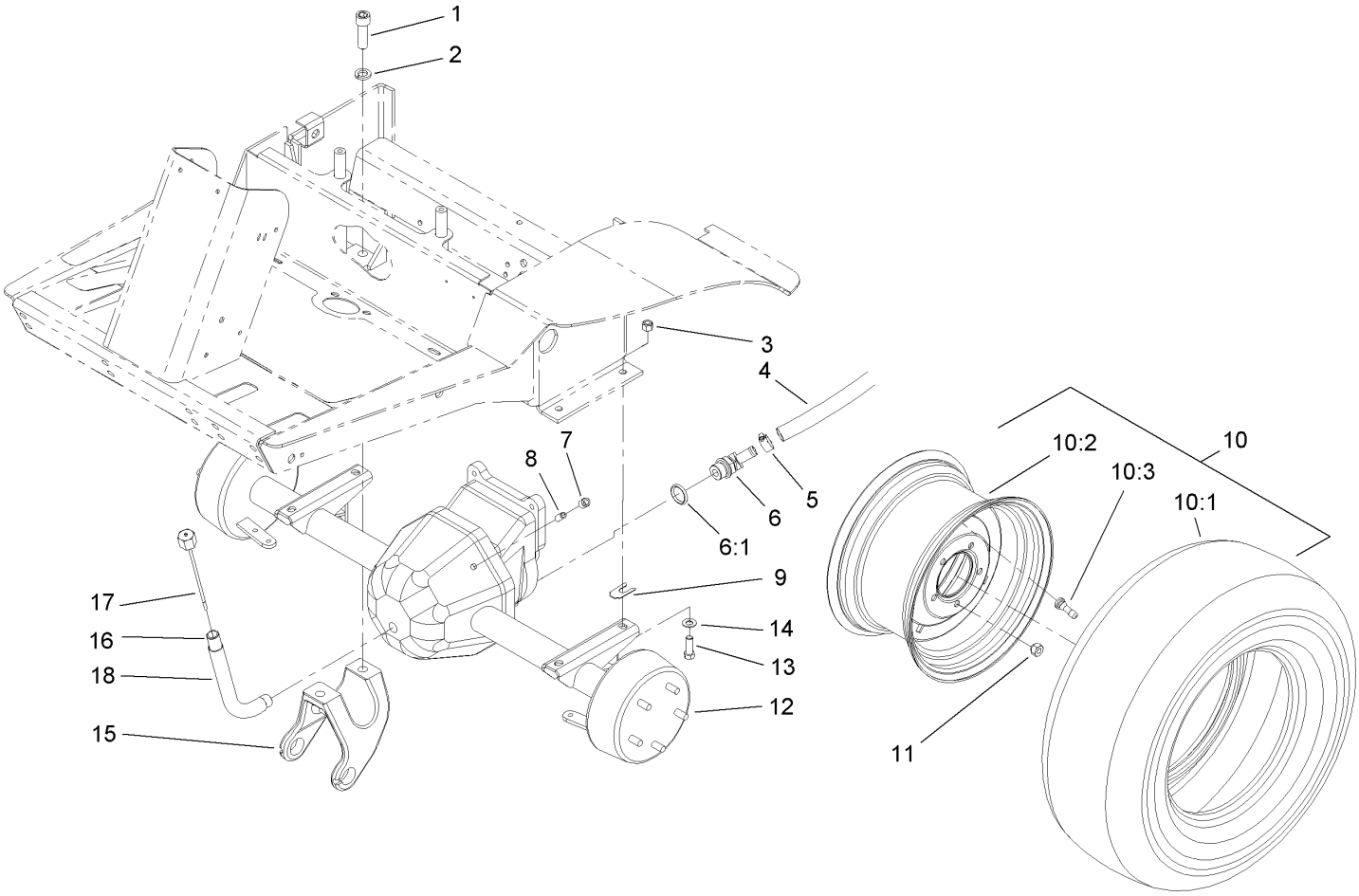

Front Axle Assembly

Ref	Part No.	Qty.	Description
1	3273-38	4	Screw-HSH
2	3253-8	4	Washer-Lock
3	3296-48	4	Nut-Lock, NI
4	92-5083	1	Hose-HYD
5	2412-119	1	Clamp-Worm
6	92-5088	1	Fitting-Elbow, 45 DEG
6:1	237-81	1	O-Ring
7	2810-1	1	Coupling-Pipe
8	289-6	1	Nipple-Pipe
9	42-6080	1	Shim-Axle
❷10		2	Wheel And Tire ASM
10:1	108-6594	1	Tire (23X9.5-12) 4-Ply
10:2	108-1358	1	Wheel
10:3	232-27	1	Stem-Valve
11	242-50	10	Nut-Lug
12	108-6599-03	1	Axle ASM
13	324-5	4	Screw-HH
14	3256-25	4	Washer-Flat
15	110-9678-03	2	Bracket-Carrier
16	105-7169	1	Tube-Fill, Oil
17	105-7172	1	Dipstick ASM
18	110-5651	1	Sleeve-Protective

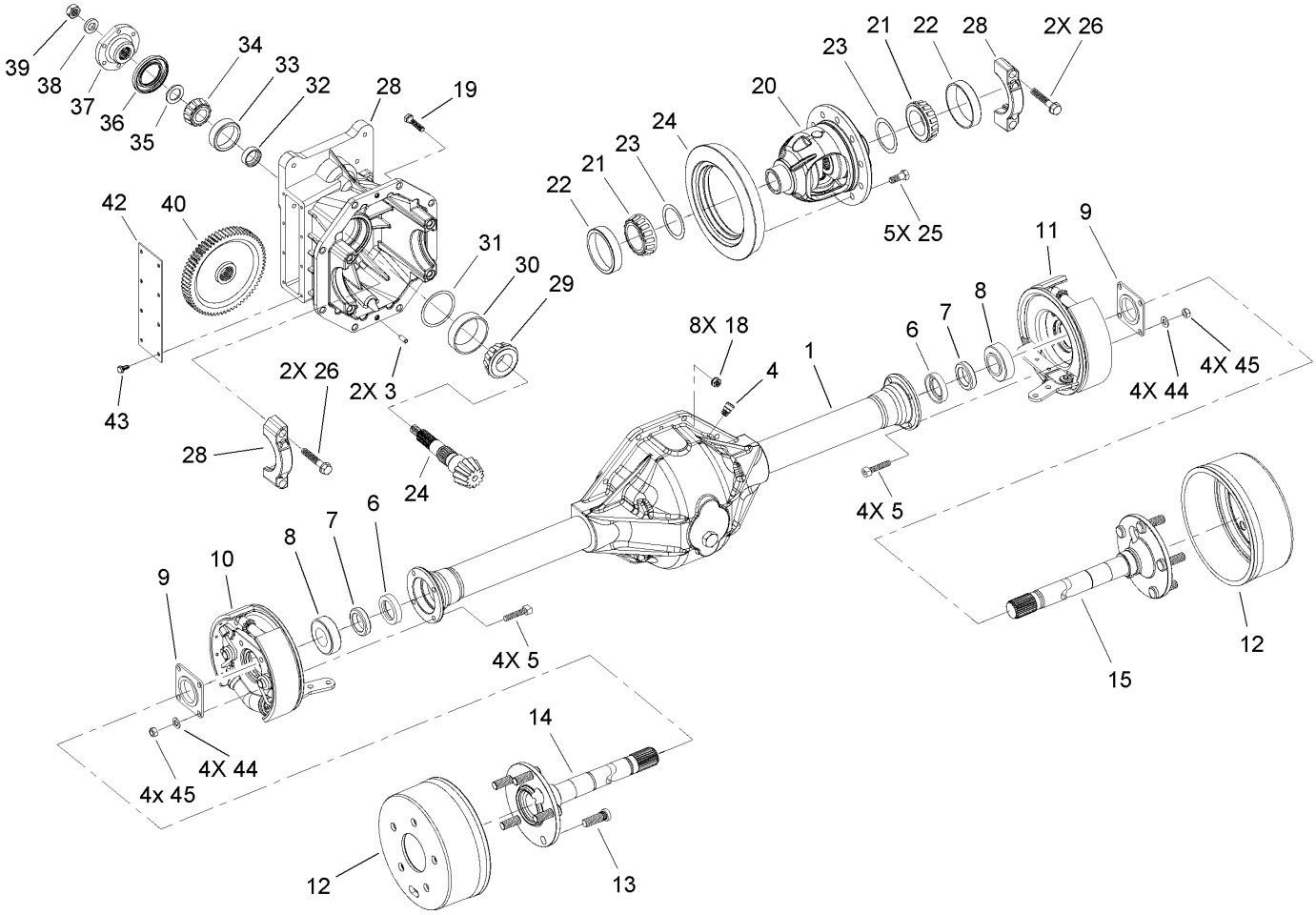

Front Axle Assembly No. 108-6599-03

Ref	Part No.	Qty.	Description
1	110-9670	1	Lower Housing ASM
3	21-8270	2	Pin-Dowel
4	72-9420	1	Vent
5	94-6934	8	Screw-HH
6	24-8840	2	Ring-Retaining, Wheel Bearing
7	99-6969	2	Seal-Oil, Wheel End
8	21-8180	2	Bearing ASM
9	28-0670	2	Seal-Grease
❷10		1	Brake ASM, RH
❷11		1	Brake ASM, LH
12	110-3072	2	Drum-Brake
13	106-9205	10	Stud-Wheel
14	110-3073	1	Shaft-Axle, RH
15	110-3074	1	Shaft-Axle, LH
18	32149-5	8	Nut-Keps
19	3210-8	8	Screw-HH
20	110-4136	1	Differential Case ASM
21	254-65	2	Cone-Bearing, Roller
22	254-66	2	Cup-Bearing, Roller
23	21-8090	1	Shim-Bearing, Differential (.003)
23	21-8100	1	Shim-Bearing, Differential (.005)
23	21-8110	1	Shim-Bearing, Differential (.010)
23	21-8120	1	Shim-Bearing, Differential (.030)
24	92-1676	1	Gear And Pinion ASM

Ref	Part No.	Qty.	Description
25	21-7770	5	Screw-Gear, Drive
26	92-1773	4	Screw-HHF
28	110-3076	1	Carrier ASM
29	43-6760	1	Bearing-Roller, Cone Taper
30	43-6750	1	Bearing-Taper, Cup
31	43-6710	1	Shim-Pinion (.003)
31	43-6711	1	Shim-Pinion (.005)
31	43-6712	1	Shim-Pinion (.010)
31	43-6713	1	Shim-Pinion (.030)
32	21-8020	1	Spacer-Bearing
33	254-90	1	Bearing-Cup
34	254-91	1	Cone-Bearing
35	72-3570	1	Shim-Bearing, Front (.094)
35	72-3571	1	Shim-Bearing, Front (.096)
35	72-3572	1	Shim-Bearing, Front (.098)
35	72-3573	1	Shim-Bearing, Front (.100)
35	72-3574	1	Shim-Bearing, Front (.102)
35	72-3575	1	Shim-Bearing, Front (.104)
35	72-3576	1	Shim-Bearing, Front (.106)
35	72-3577	1	Shim-Bearing, Front (.108)
35	72-3578	1	Shim-Bearing, Front (.110)
35	72-3580	1	Shim-Bearing, Front (.112)
35	72-3581	1	Shim-Bearing, Front (.114)
35	72-3582	1	Shim-Bearing, Front (.116)

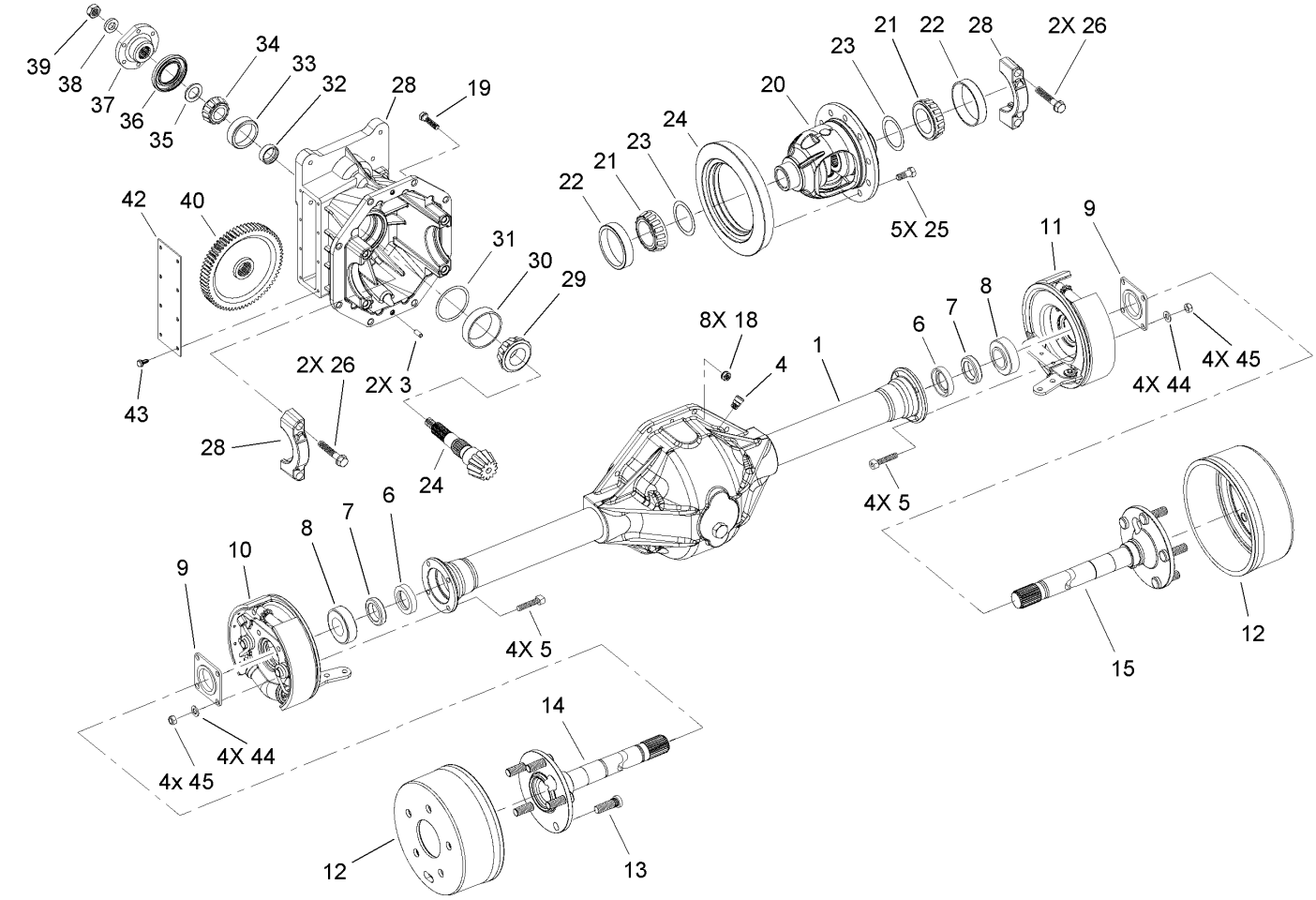

Front Axle Assembly No. 108-6599-03 (continued)

Ref	Part No.	Qty.	Description
35	72-3583	1	Shim-Bearing, Front (.118)
35	72-3584	1	Shim-Bearing, Front (.120)
35	72-3585	1	Shim-Bearing, Front (.125)
35	72-3586	1	Shim-Bearing, Front (.127)
35	72-3587	1	Shim-Bearing, Front (.129)
35	72-3588	1	Shim-Bearing, Front (.131)
35	72-3590	1	Shim-Bearing, Front (.133)
35	72-3591	1	Shim-Bearing, Front (.135)
35	72-3592	1	Shim-Bearing, Front (.137)
35	72-3593	1	Shim-Bearing, Front (.139)
35	72-3594	1	Shim-Bearing, Front (.141)
35	72-3595	1	Shim-Bearing, Front (.143)
35	72-3596	1	Shim-Bearing, Front (.145)
35	72-3597	1	Shim-Bearing, Front (.147)
35	72-3598	1	Shim-Bearing, Front (.149)
35	72-3600	1	Shim-Bearing, Front (.151)
36	71-4330	1	Seal
37	68-7010	1	Flange
38	71-4340	1	Washer
39	71-4350	1	Nut
40	86-7230	1	Gear-Input, Transmission
42	21-7830	1	Cover-Gear
43	12-5450	8	Screw
44	94-6936	8	Washer-Hardened

Ref	Part No.	Qty.	Description
45	94-6935	8	Locknut

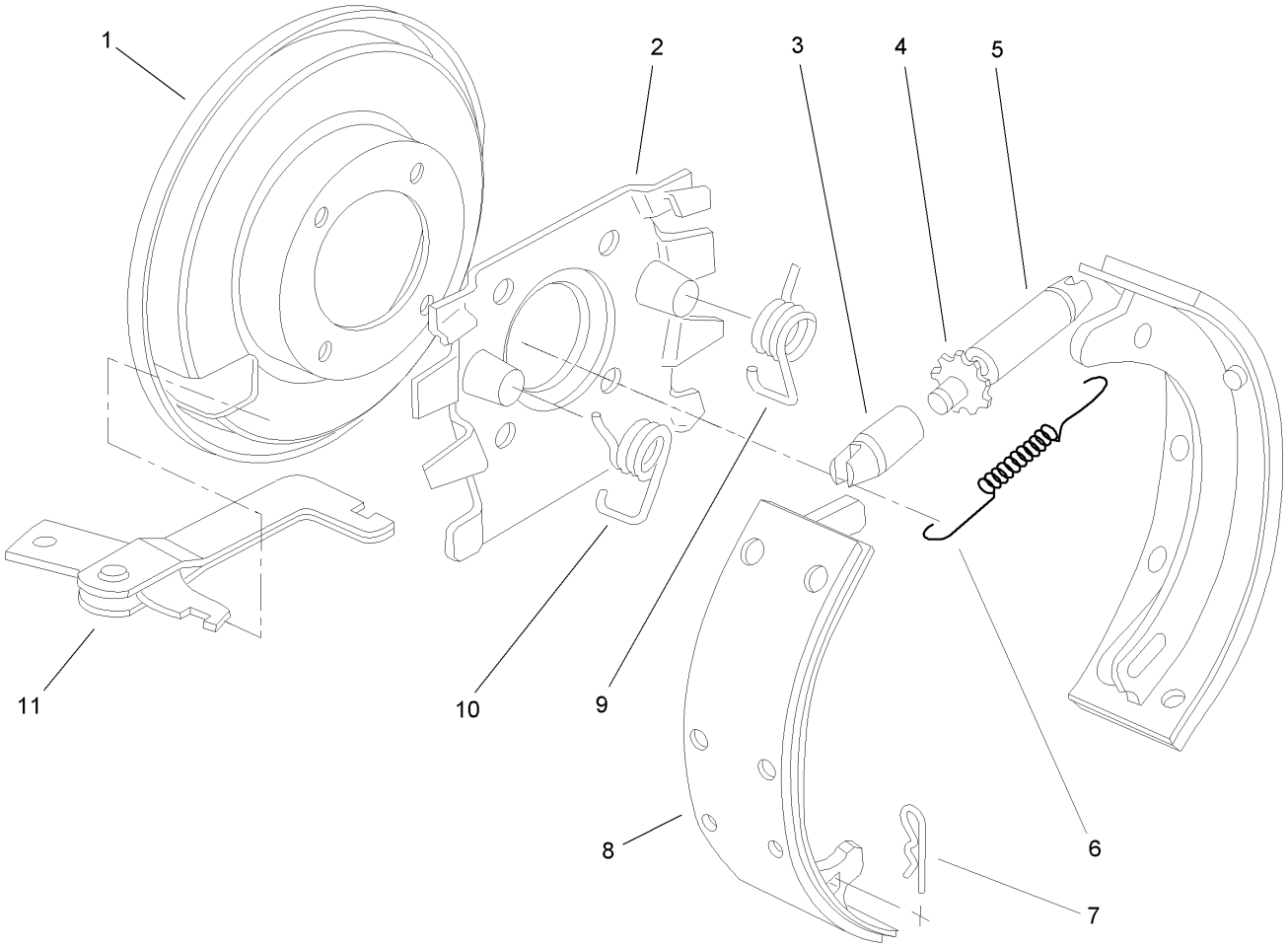

Right and Left Hand Brake Assembly

Ref	Part No.	Qty.	Description
1	21-9450	1	Shield-Dust
2	43-6810	1	Spider-Torque
3	21-9390	1	Socket-Screw, Adjusting
4	21-9370	1	Screw-Adjusting
5	21-9380	1	Nut-Pivot
6	21-9440	1	Spring-Screw, Adjusting
7	21-9460	2	Retainer-Lever, Brake
8	84-8600	1	Set-Shoes, Lined
9	21-9430	1	Spring-Return, RH
10	21-9420	1	Spring-Return, LH
11	24-9180	1	Strut And Lever ASM
❶12	92-8775	1	Liquid Gasket Kit

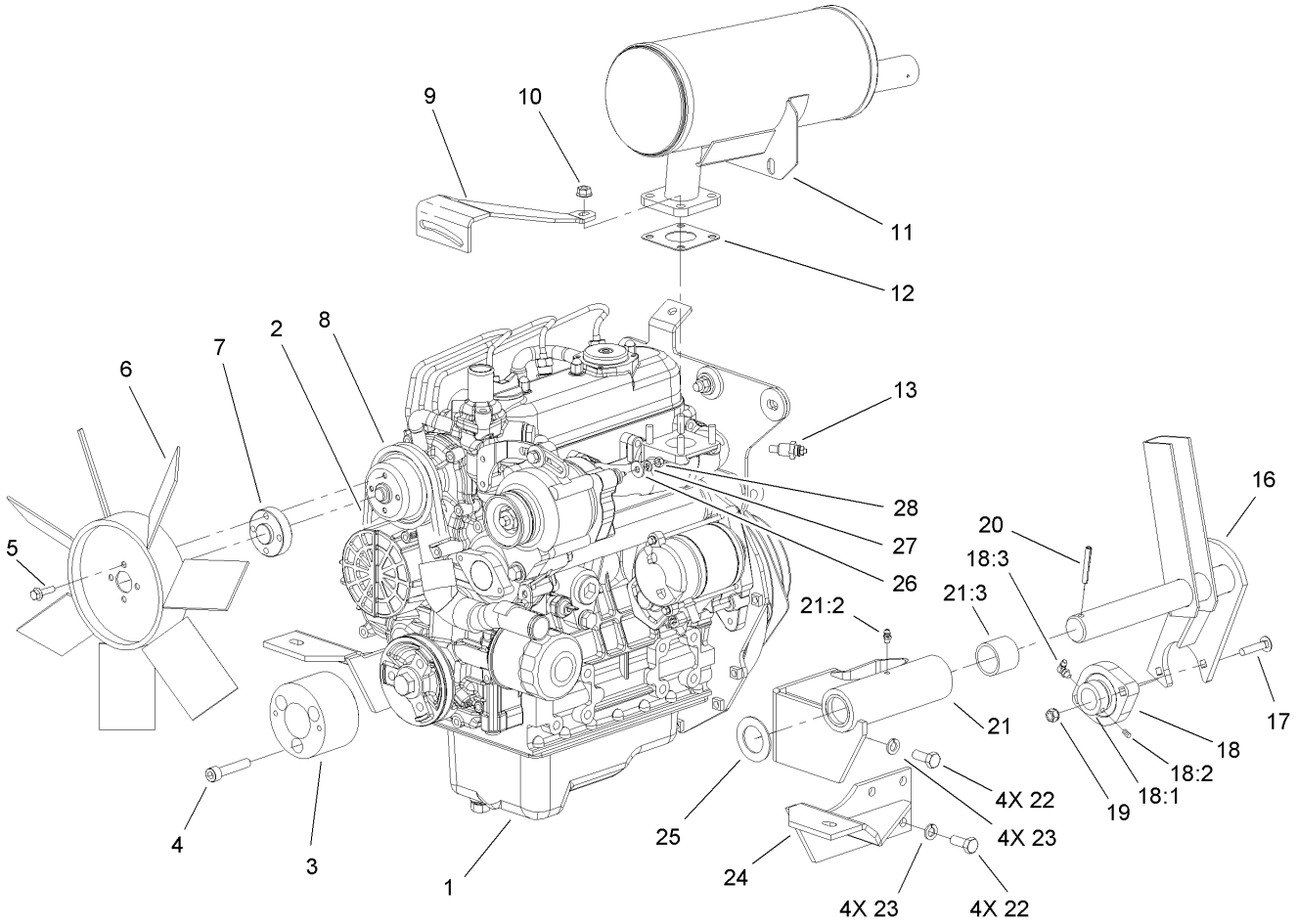

Engine Assembly No. 1

Ref	Part No.	Qty.	Description
1	114-2885	1	Engine ASM-Kubota
2	104-3494	1	Belt-V
3	104-1723	1	Adapter-Front Drive
4	3274-106	3	Screw-HSH
5	33103-020	4	Screw-HHF
6	104-4246	1	Fan-Engine
7	104-4247	1	Spacer-Fan
8	104-3497	1	Pulley-Fan
9	105-2556-03	1	Brace-Alternator, Upper
10	33004-00	4	Nut-HF
11	108-1363	1	Muffler-Exhaust
12	98-9611	1	Gasket
13	108-8682	1	Thermoswitch
16	106-4381-03	1	PTO Tension Shaft ASM
17	3230-4	2	Screw-CARR
18	92-8799	1	Bearing-Flange
18:1	251-77	1	Collar-Lock, Bearing
18:2	3245-35	1	Screw-Set
18:3	302-40	1	Fitting-Grease
19	32149-1	2	Nut-Keps
20	32121-32	1	Pin-Roll
21	104-3417	1	LH Engine Mount ASM
21:2	302-5	1	Fitting-Grease
21:3	256-299	2	Bushing-Straight

Ref	Part No.	Qty.	Description
22	43-0090	8	Screw-HH
23	42-9600	8	Washer-Lock, Spring
24	104-1702-03	1	Engine Mount ASM
25	3-4324	1	Washer-Flat
26	3256-22	1	Washer-Flat
27	43-5930	1	Washer-Spring
28	33013-00	1	Nut-Hex

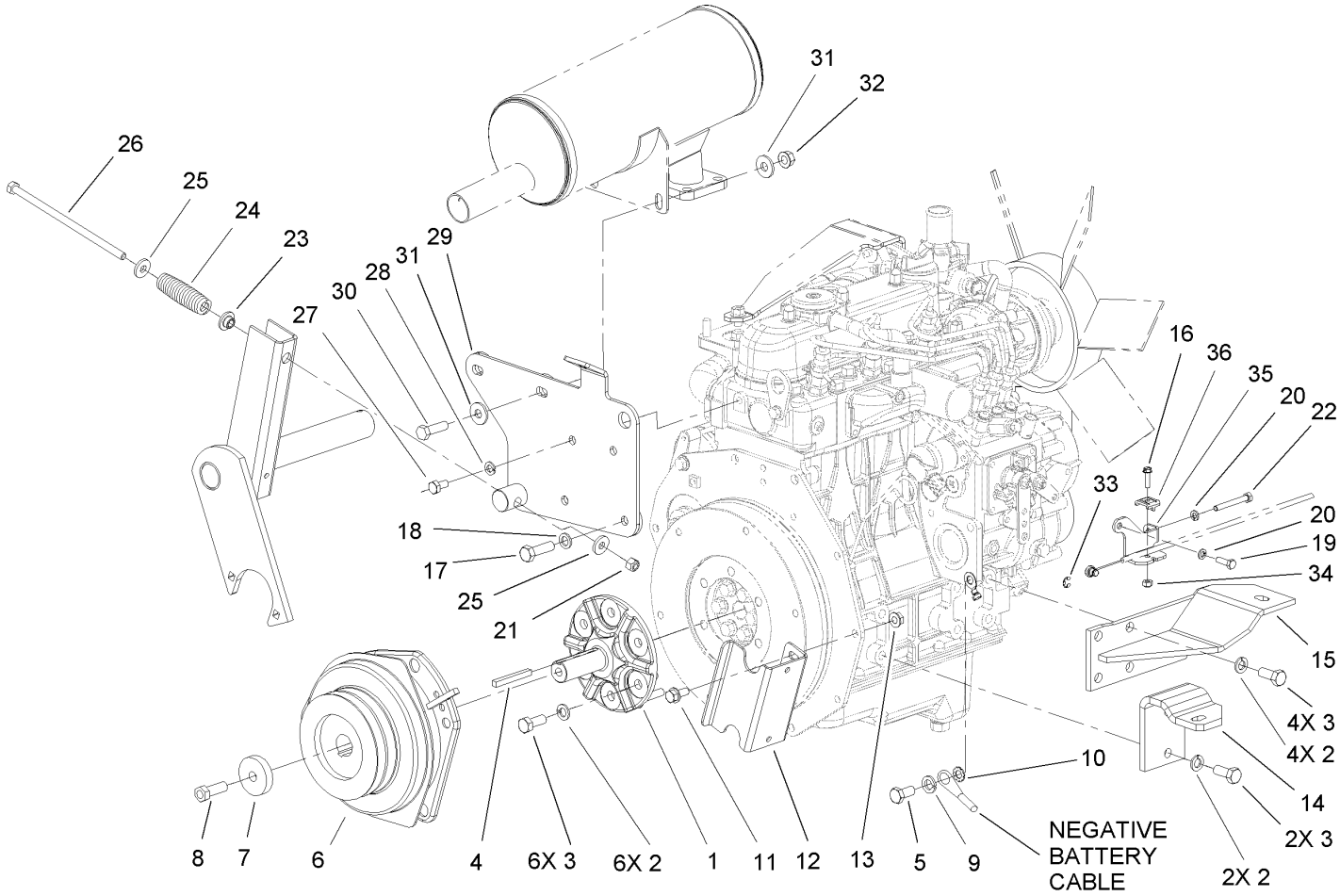

Engine Assembly No. 2

Ref	Part No.	Qty.	Description
1	104-1715	1	Hub-Clutch
2	42-9600	12	Washer-Lock, Spring
3	43-0090	12	Screw-HH
4	63-8150	1	Key-Square
5	63-7790	1	Screw-Cap
6	107-9061	1	Electric Clutch / Brake ASM
7	105-3698	1	Spacer
8	3212-5	1	Screw-HH
9	3253-6	1	Washer-Lock
10	3255-9	1	Washer-Lock
11	3234-5	2	Screw-HHF
12	108-6586-03	1	Stop-Clutch
13	32128-25	2	Nut-HF
14	104-1713-03	1	Mount-Engine
15	104-1710-03	1	Engine Mount ASM
16	32105-13	1	Screw-HWH
17	56-2140	2	Bolt
18	48-9590	2	Washer-Lock
19	48-7630	1	Screw
20	48-8020	2	Washer-Spring
21	3296-29	1	Nut-Lock, NI
22	33113-050	1	Screw-HH
23	27-6600	1	Spacer-Coupling
24	21-0400-01	1	Spring-Compression

Ref	Part No.	Qty.	Description
25	4-2390	2	Washer-Flat
26	110-9696	1	Bolt-HH
27	33114-016	2	Screw-HH
28	3253-4	2	Washer-Lock
29	108-6561-03	1	Muffler Mount ASM
30	323-44	2	Screw-HH
31	80-6990	4	Washer-Hardened
32	32128-21	2	Nut-HF
33	701197	1	E-Ring
34	3296-2	1	Nut-Lock
35	110-9682-03	1	Bracket-Throttle
36	81-1690	1	Clamp-Cable

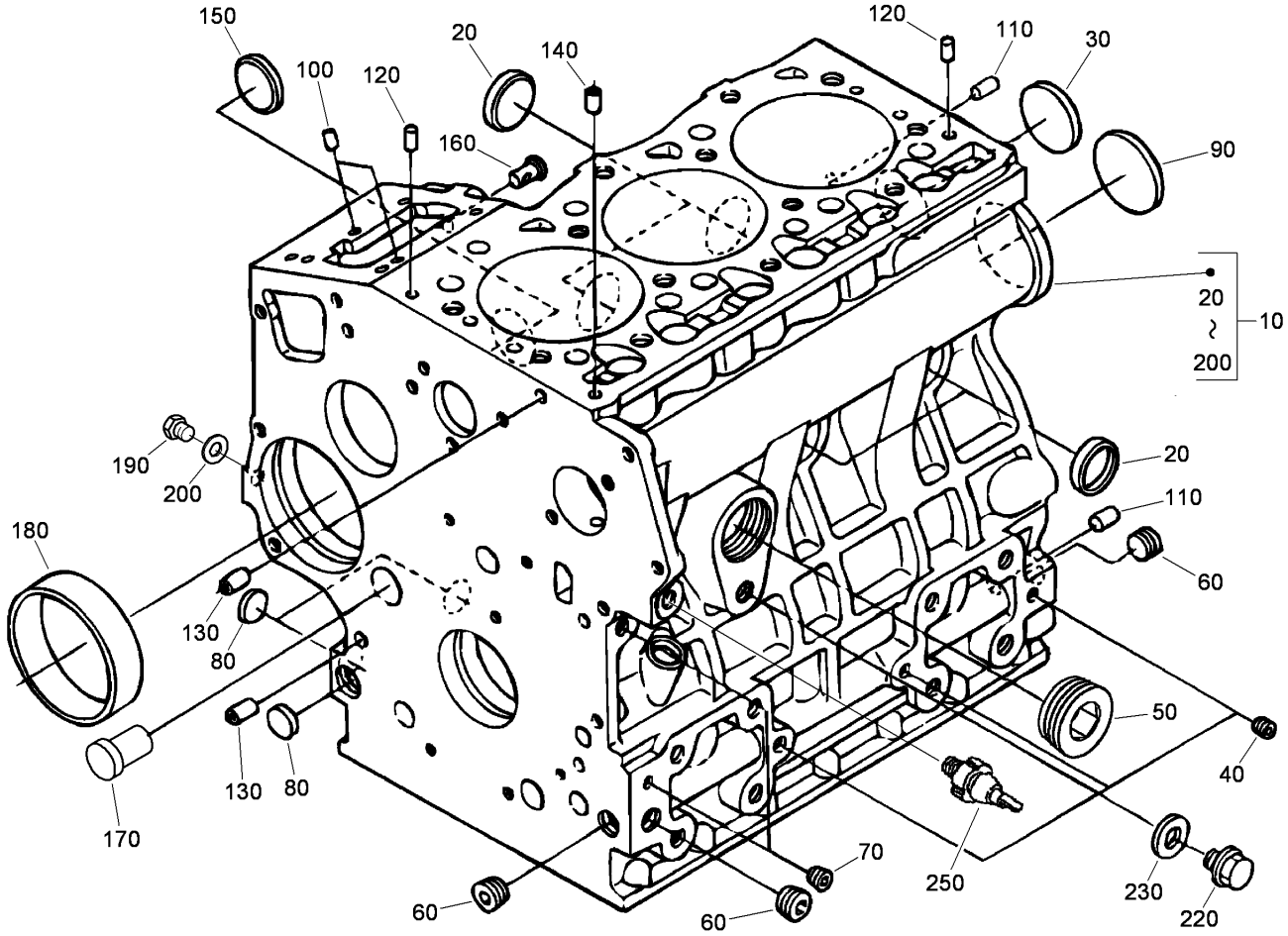

Crankcase Assembly

Ref	Part No.	Qty.	Description
10	108-6571	1	Crankcase ASM
20	98-9398	4	Cap-Sealing
30	98-7539	1	Cap-Sealing
40	98-9687	3	Plug
50	105-3779	1	Plug
60	98-9597	3	Plug
70	98-7487	2	Plug
80	98-9379	3	Plug
90	98-9668	1	Plug
100	98-9375	2	Pin-Straight
110	98-9377	2	Pin-Straight
120	105-3795	2	Pin-Straight
130	98-9387	2	Pin-Pipe
140	98-9539	1	Pin-Pipe
150	98-9599	1	Plug
160	98-9630	1	Pin-Spring, Start
170	98-9675	1	Plug
180	98-9656	1	Bushing-Governor, Gear
190	98-7507	1	Plug
200	98-7428	1	Gasket
220	99-3447	1	Plug
230	106-7056	1	Gasket
250	98-9416	1	Switch-Oil

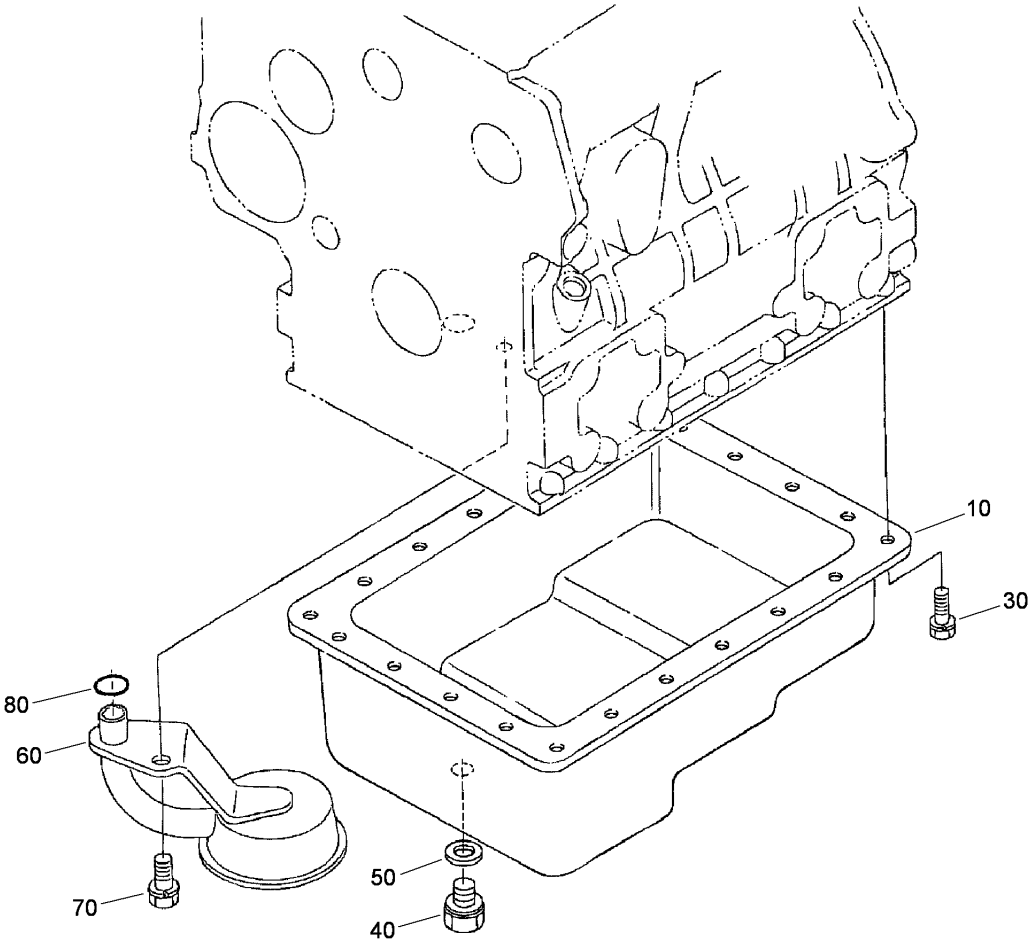

Oil Pan Assembly

Ref	Part No.	Qty.	Description
10	104-3495	1	Pan-Oil
30	107-9065	22	Bolt
40	108-6572	1	Plug-Drain
50	98-7524	1	Gasket
60	104-3496	1	Filter-Pickup, Oil
70	98-7526	1	Bolt
80	105-3776	1	O-Ring

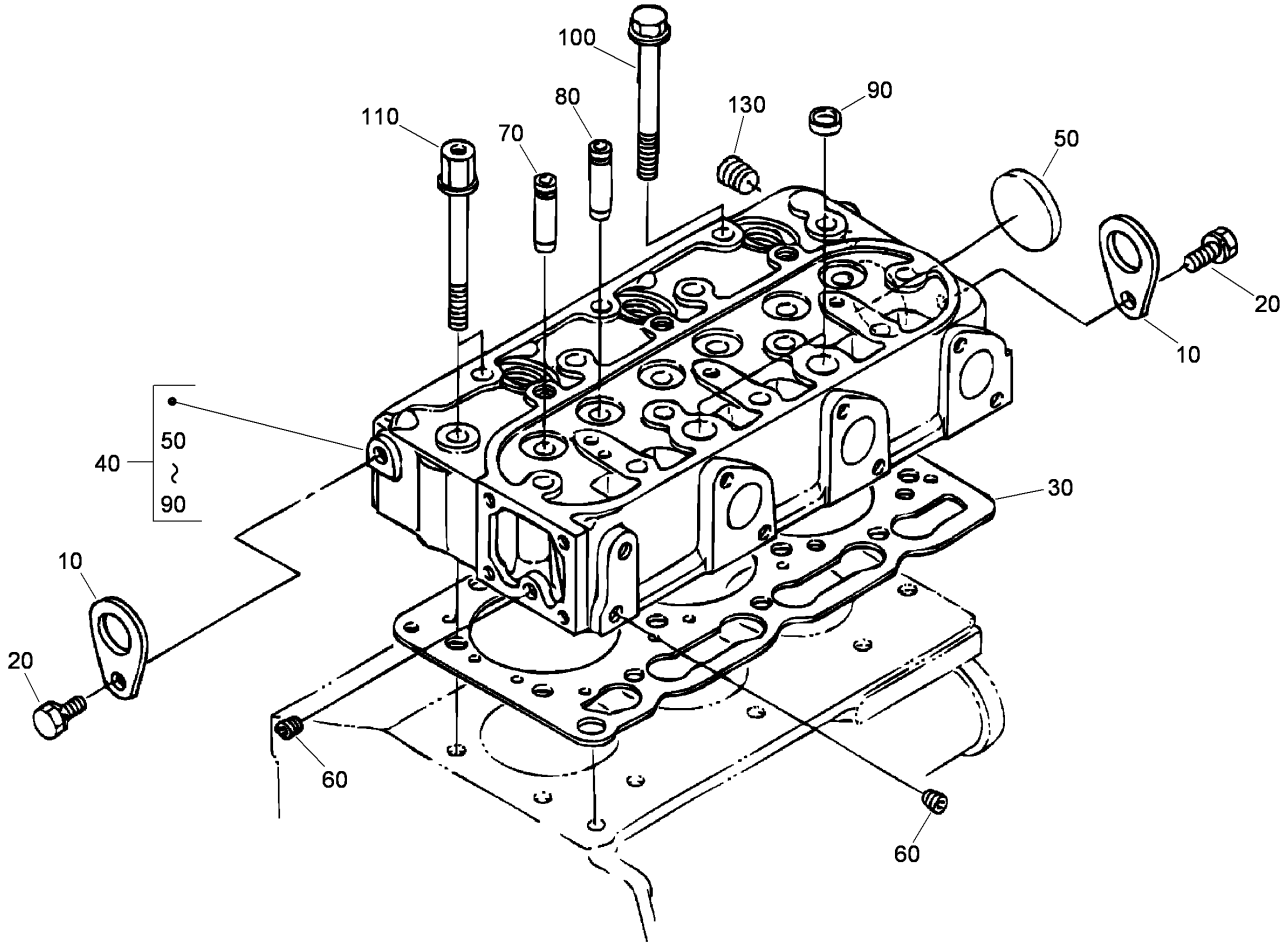

Cylinder Head Assembly

Ref	Part No.	Qty.	Description
10	98-7531	2	Hook-Engine
20	100-9195	2	Bolt
30	108-6573	1	Gasket-Head, Cylinder
40	108-6574	1	Cylinder Head ASM
50	105-3705	1	Cap-Sealing
60	98-9687	2	Plug
70	107-9066	3	Guide-Valve, Inlet
80	107-9067	3	Guide-Valve, Exhaust
90	98-9389	2	Cap-Sealing
100	98-9479	1	Bolt-Head, Cylinder
110	98-9647	2	Bolt-Head, Cylinder
130	98-9444	1	Plug

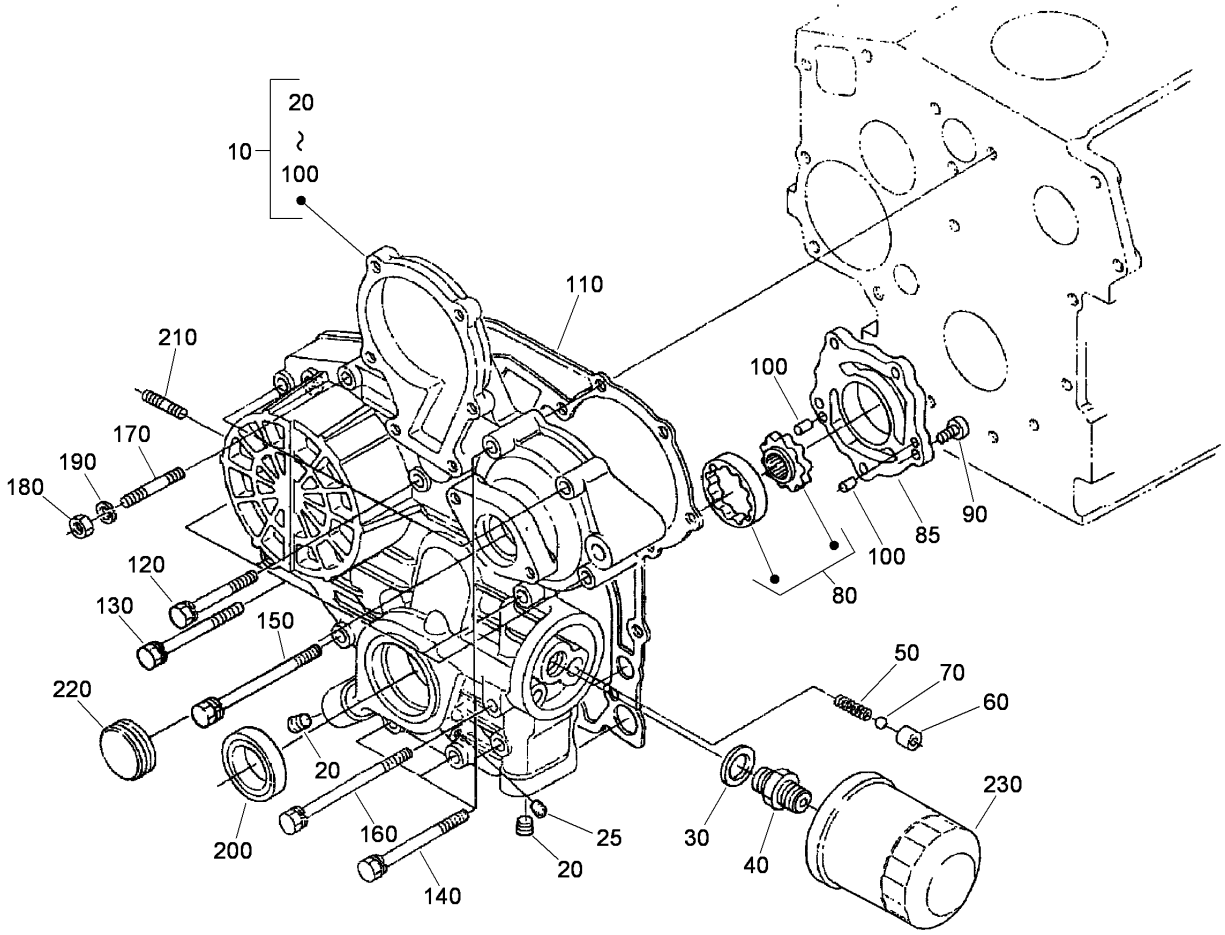

Gear Case Assembly

Ref	Part No.	Qty.	Description
10	107-9068	1	Gear Case ASM
20	98-9598	2	Plug
25	98-7487	1	Plug
30	98-7562	1	Washer-Plain
40	98-9388	1	Joint-Pipe
50	98-9544	1	Spring
60	98-9543	1	Seat-Valve
70	98-9380	1	Ball
80	98-9540	1	Oil Pump Rotor ASM
85	107-9069	1	Cover-Pump, Oil
90	107-9071	5	Screw
100	107-9072	2	Pin-Straight
110	98-9633	1	Gasket-Case, Gear
120	107-9073	3	Bolt
130	105-3797	4	Bolt
140	98-9356	4	Bolt
150	107-9074	1	Bolt
160	98-9586	1	Bolt
170	105-3709	1	Stud
180	98-7572	1	Nut
190	98-7699	1	Washer-Spring
200	98-9482	1	Seal-Oil
210	105-3710	2	Stud
220	98-9641	1	Cover

Ref	Part No.	Qty.	Description
230	108-3841	1	Filter-Oil

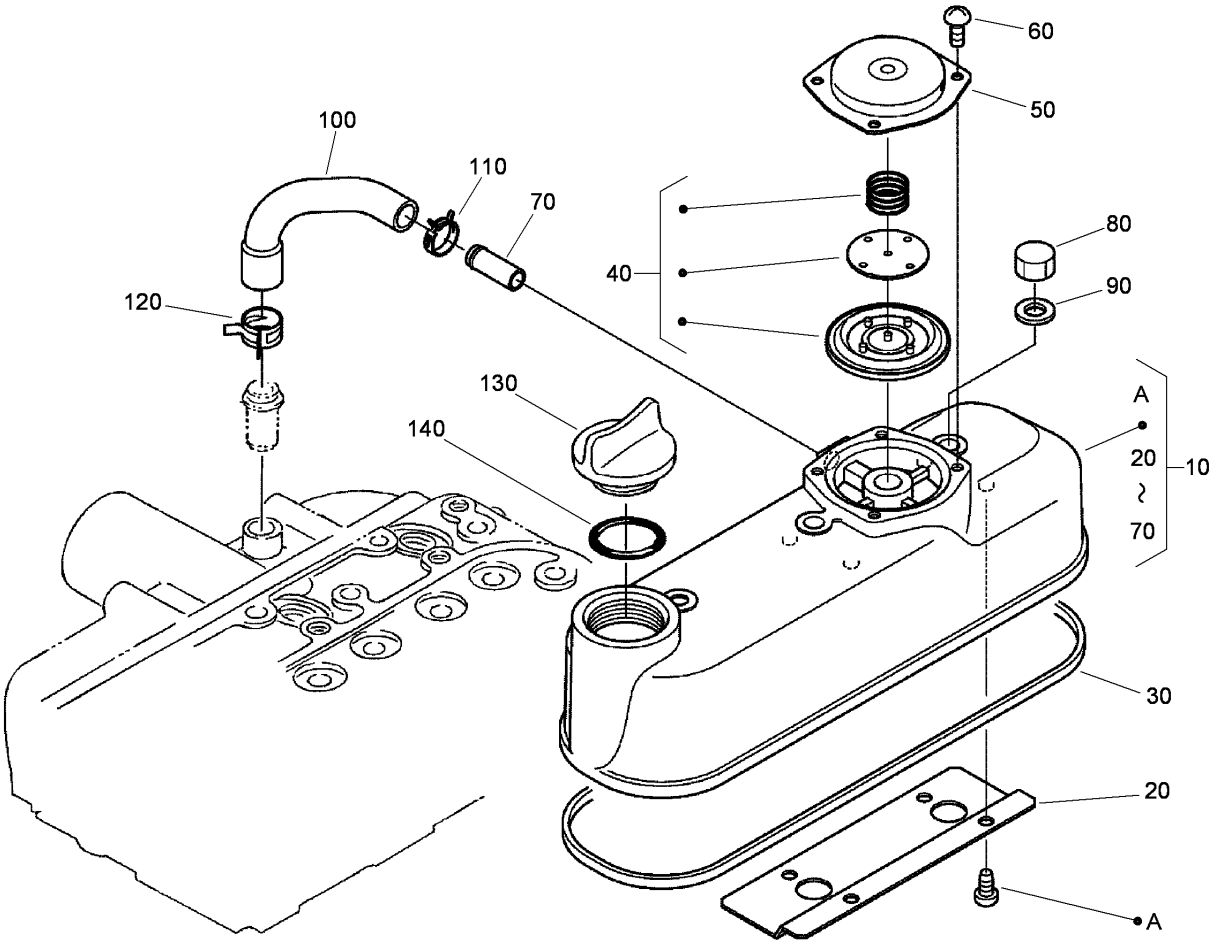

Head Cover Assembly

Ref	Part No.	Qty.	Description
10	108-6575	1	Cylinder Head Cover ASM
20	108-2857	1	Shield-Breather
30	98-9615	1	Gasket-Cover, Head
40	108-2861	1	Breather Valve ASM
50	108-2862	1	Cover-Breather
60	108-2863	4	Screw-PPH
70	98-7766	1	Pipe-Return, Water
80	98-9455	3	Nut-Cap
90	98-9454	3	Gasket
100	108-2858	1	Tube-Beather
110	108-2859	1	Clamp-Hose
120	108-2860	1	Clamp-Hose
130	107-9075	1	Plug-Filler, Oil
140	99-3446	1	O-Ring

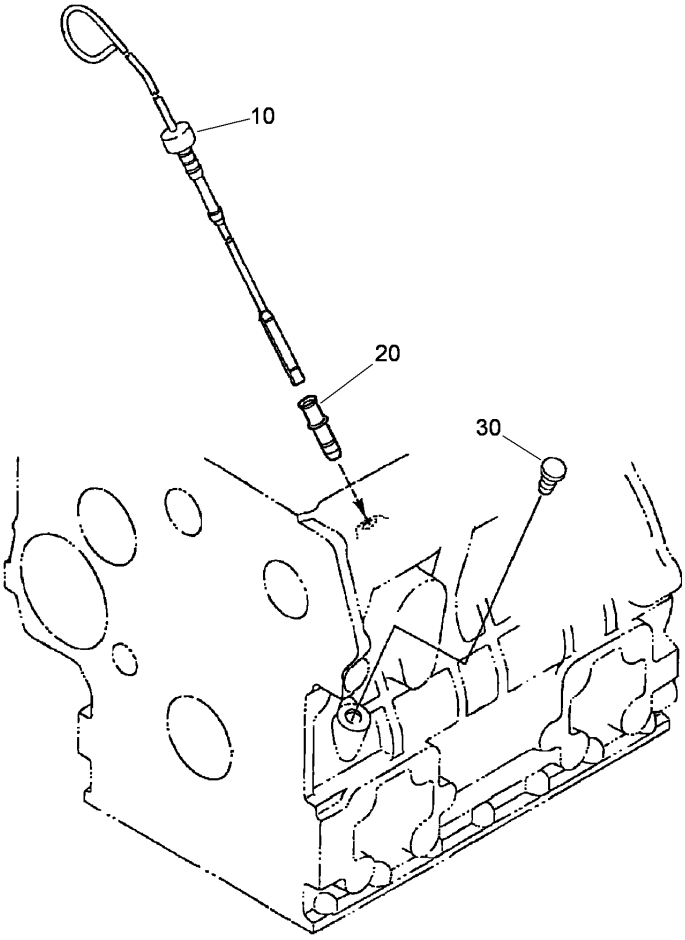

Dipstick and Guide Assembly

Ref	Part No.	Qty.	Description
10	107-9076	1	Gauge-Oil
20	105-4580	1	Guide
30	105-3715	1	Plug-Gauge, Oil

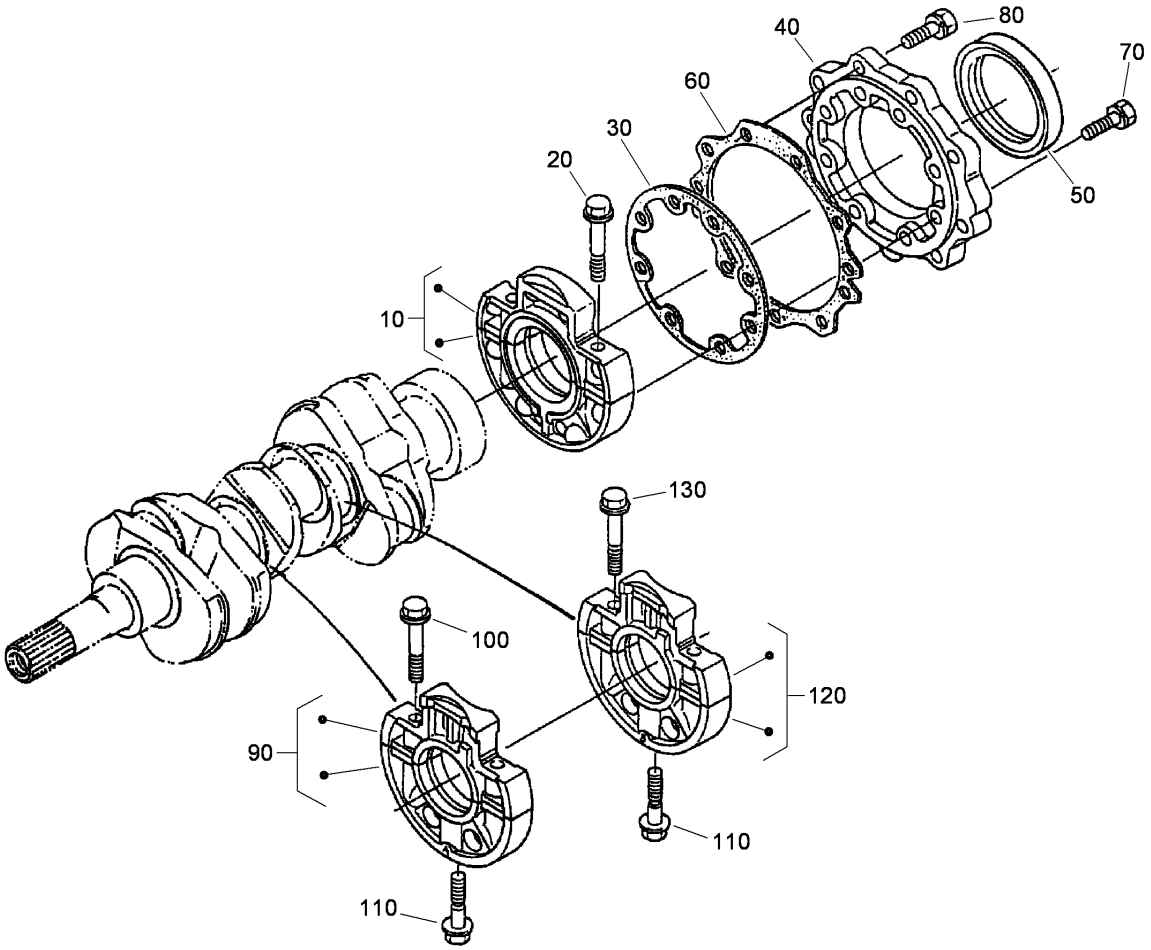

Main Bearing Case Assembly

Ref	Part No.	Qty.	Description
10	98-9480	1	Main Bearing Case ASM
20	98-9484	6	Bolt-Case, Bearing
30	98-9634	1	Gasket-Case, Bearing
40	98-9487	1	Cover-Case, Bearing
50	112-0180	1	Seal-Oil
60	98-9635	1	Gasket-Cover, Bearing Case
70	98-9352	8	Bolt
80	98-7568	9	Bolt
90	98-9606	1	Main Bearing Case ASM
100	98-9484	2	Bolt-Case, Bearing
110	98-9485	2	Bolt-Case, Bearing
120	98-9607	1	Main Bearing Case ASM
130	98-9484	2	Bolt-Case, Bearing

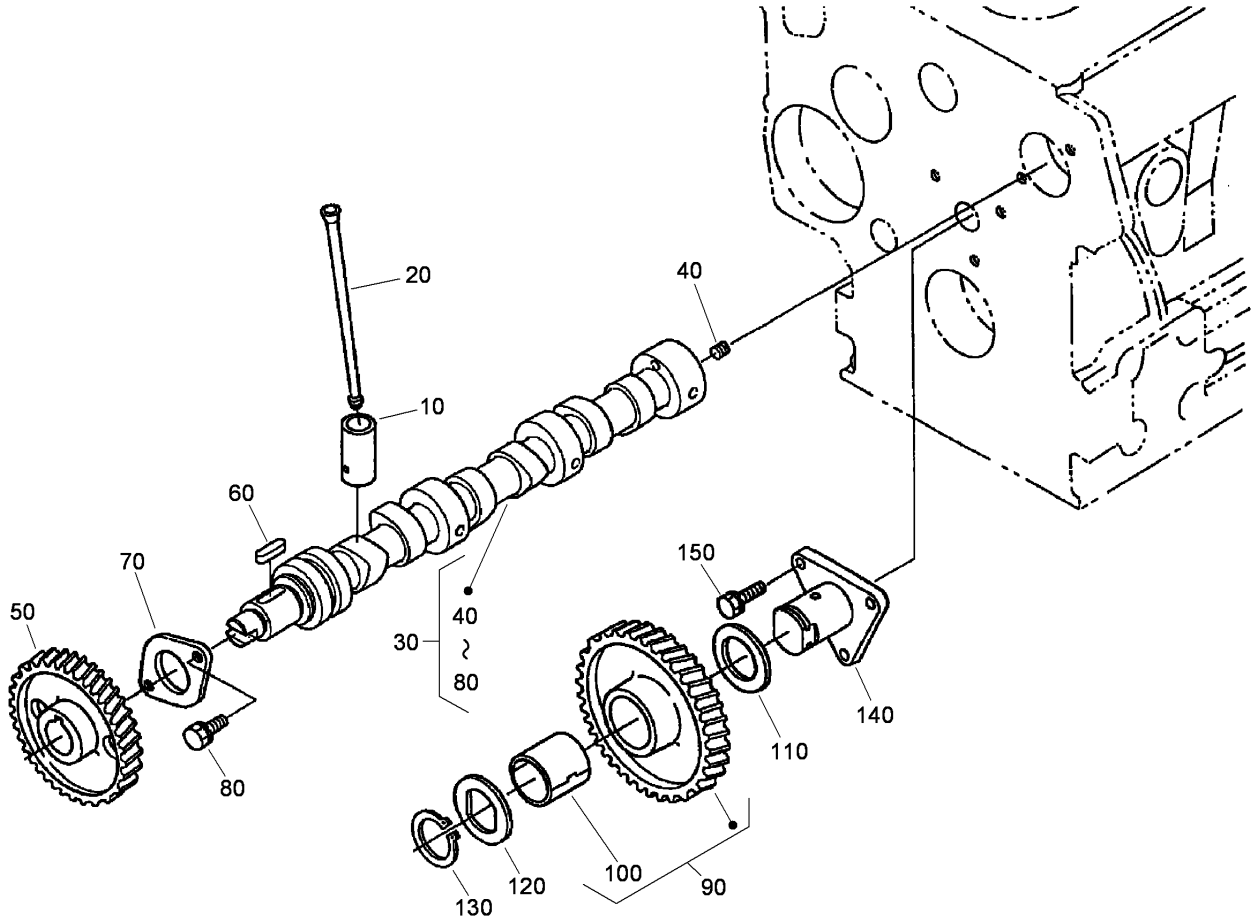

Camshaft and Idle Gear Shaft Assembly

Ref	Part No.	Qty.	Description
10	98-9616	6	Tappet
20	98-9509	6	Rod-Push
30	108-6576	1	Camshaft ASM
40	98-7449	1	Screw-Set
50	98-9512	1	Gear-Cam
60	98-9378	1	Key-Feather
70	98-9510	1	Stopper-Camshaft
80	98-9351	2	Bolt
90	98-9649	1	Idle Gear ASM
100	98-9650	1	Bushing-Gear, Idle
110	98-9535	1	Collar-Gear, Idle
120	98-9536	1	Collar-Gear, Idle
130	98-9534	1	Clip-Circular, Idle Gear
140	98-9533	1	Shaft-Gear, Idle
150	98-7692	3	Bolt

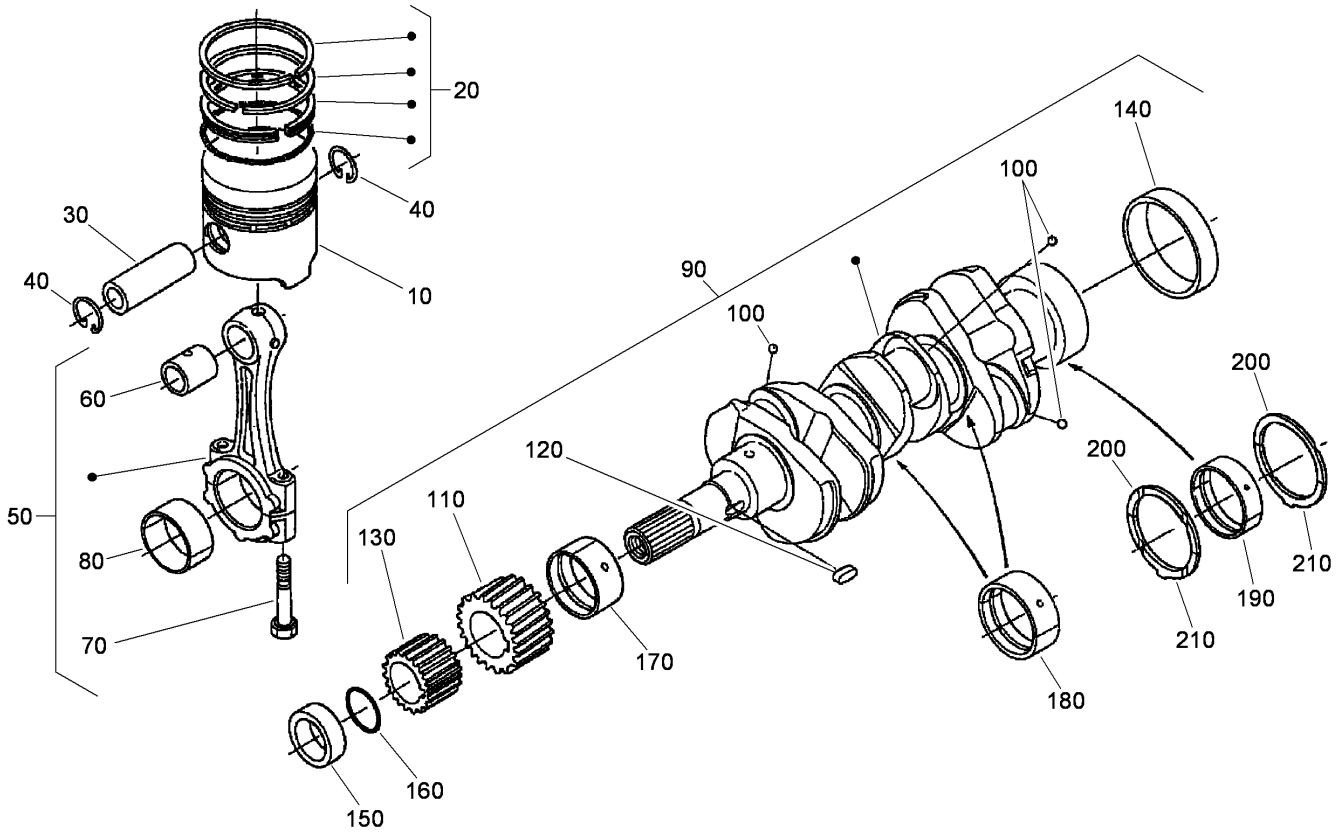

Piston and Crankshaft Assembly

Ref	Part No.	Qty.	Description
10	112-8415	3	Piston ASM
10	112-8404	3	Piston
20	98-9619	3	Piston Ring ASM (0.5Mm)
20	98-9618	3	Piston Ring ASM (STD)
30	98-9513	3	Pin-Piston
40	98-9514	6	Clip-Circular, Piston Pin
50	98-9516	3	Connecting Rod ASM
60	98-9515	3	Bushing-Pin, Piston
70	98-9517	6	Bolt-Rod, Connecting
80	98-9520	3	Bearing-Rod (0.4Mm)
80	98-9519	3	Bearing-Rod (0.2Mm)
80	98-9518	3	Metal-Crankpin (STD)
90	98-9642	1	Crankshaft ASM
100	110-3729	3	Ball
110	98-9532	1	Gear-Crankshaft
120	98-9666	1	Key
130	98-9542	1	Gear-Drive, Oil Pump
140	98-9522	1	Sleeve-Crankshaft
150	98-9521	1	Collar-Crankshaft
160	105-3783	1	O-Ring
170	98-9523	1	Metal Crankshaft (STD)
170	98-9528	1	Bearing-Main (0.2Mm)
170	98-9529	1	Bearing-Main (0.4Mm)
180	98-9524	2	Metal-Crankshaft (STD Set)

Ref	Part No.	Qty.	Description
180	98-9530	2	Bearing-Main (0.2Mm)
180	98-9531	2	Bearing-Main (0.4Mm)
190	112-7006	1	Bearing-Main (STD)
190	112-7007	1	Metal-Crankshaft (.2Mm)
190	112-7008	1	Metal-Crankshaft (.4Mm)
200	98-9413	2	Bearing-Thrust (STD)
200	98-9414	2	Bearing-Thrust (0.2Mm)
200	98-9415	2	Bearing-Thrust (0.4Mm)
210	98-9688	2	Bearing-Thrust (STD)
210	98-9689	2	Bearing-Thrust (0.2Mm)
210	98-9690	2	Bearing-Thrust (0.4Mm)

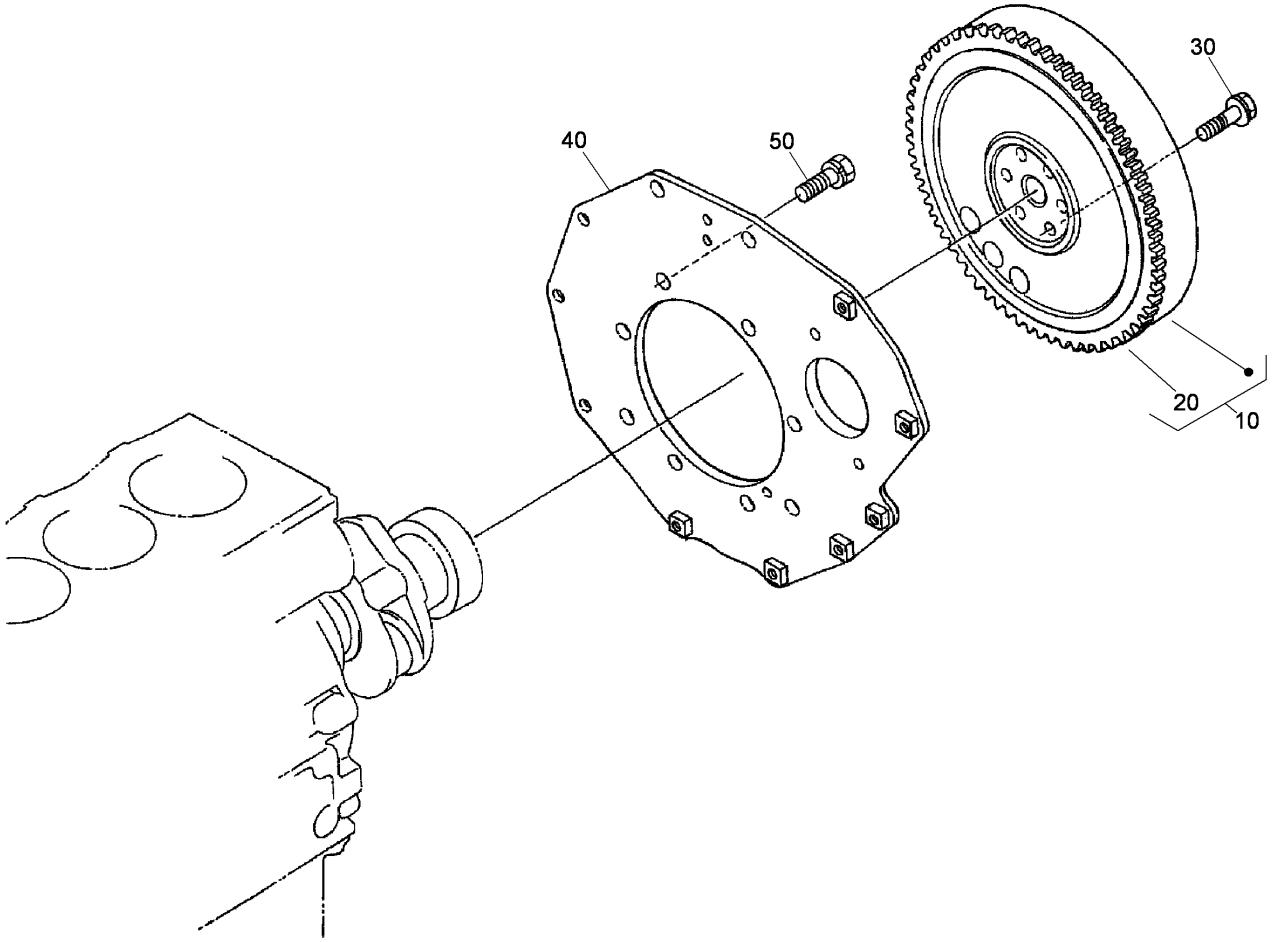

Flywheel Assembly

Ref	Part No.	Qty.	Description
10	105-3784	1	Flywheel ASM
20	105-3722	1	Gear-Ring
30	98-9537	6	Bolt-Flywheel
40	98-9486	1	Plate-End, Rear
50	98-9392	8	Bolt

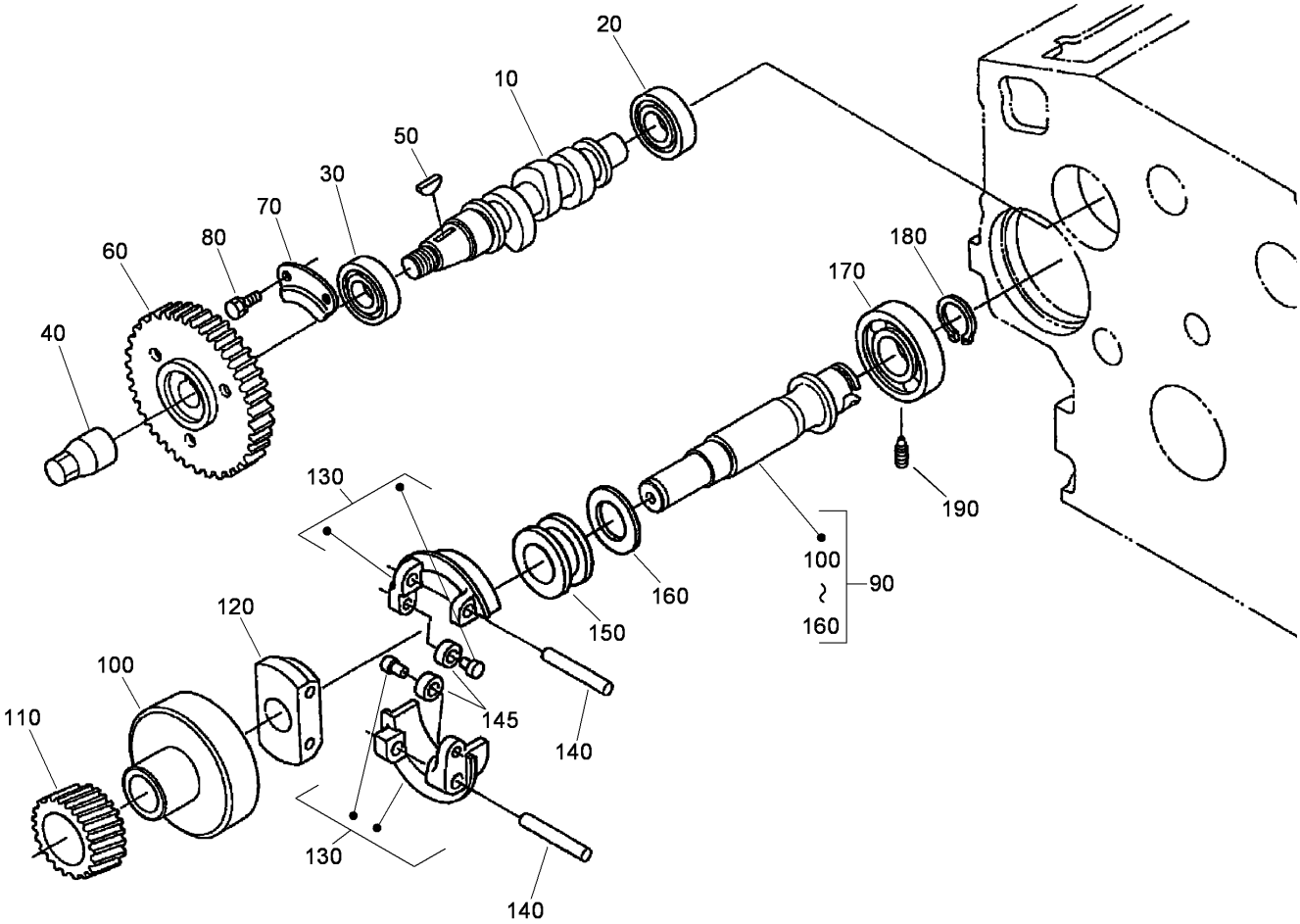

Fuel Camshaft and Governor Shaft Assembly

Ref	Part No.	Qty.	Description
10	98-9459	1	Camshaft-Fuel
20	107-9077	1	Bearing-Ball
30	107-9078	1	Bearing-Ball
40	98-9590	1	Nut-Cap
50	98-9595	1	Key-Woodruff
60	98-9669	1	Gear-Pump, Injection
70	98-9511	1	Stopper-Fuel, Camshaft
80	98-9350	2	Bolt
90	98-9644	1	Governor Shaft ASM
100	98-9562	1	Holder-Gear, Governor
110	98-9673	1	Gear-Governor
120	98-9561	1	Holder-Weight, Governor
130	98-9559	2	Governor Weight ASM
140	98-9560	2	Shaft-Weight, Governor
145	98-9692	2	Roller
150	98-9563	1	Sleeve-Governor
160	98-9564	1	Washer-Thrust
170	107-9079	1	Bearing-Ball
180	98-9657	1	Clip-Circular, Governor Shaft
190	98-9565	1	Screw-Set

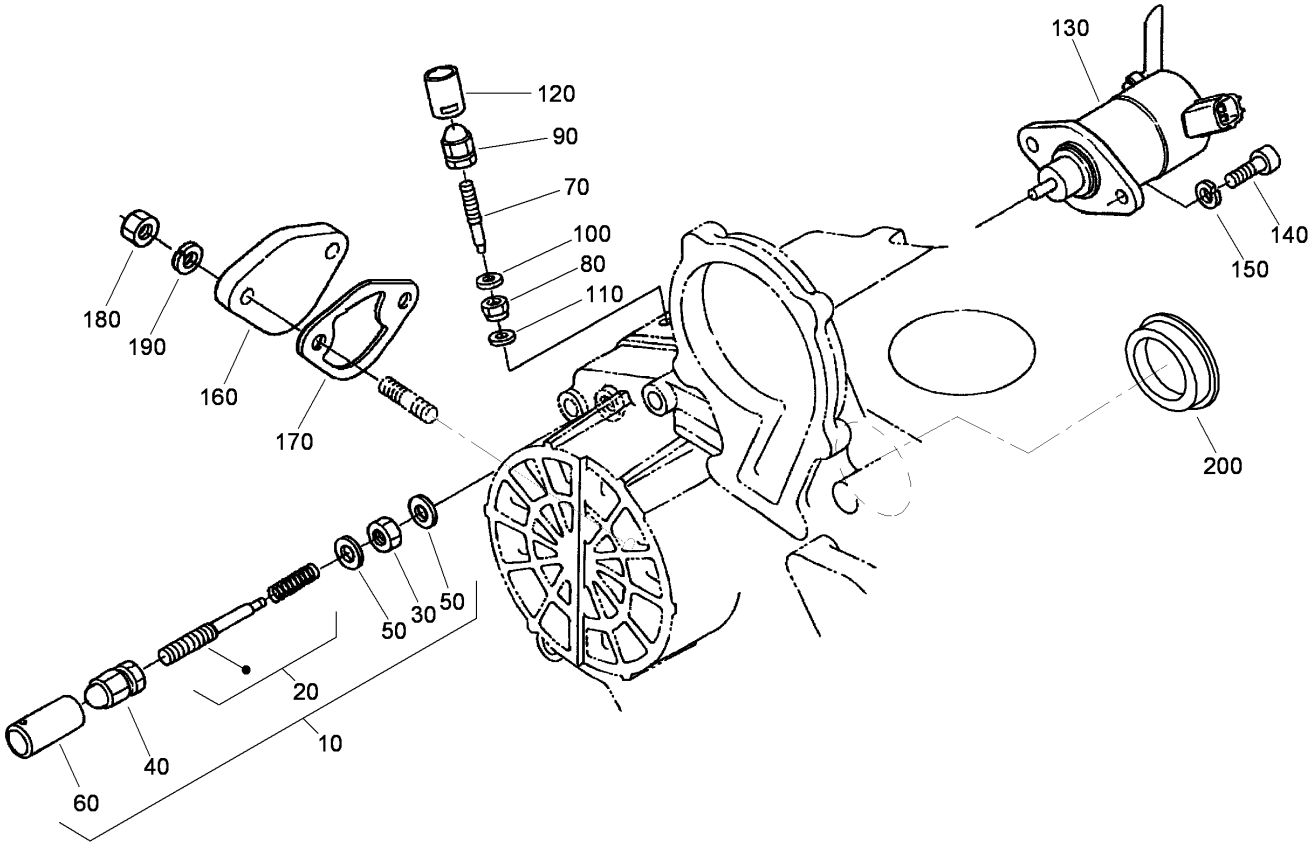

Idle Apparatus Assembly

Ref	Part No.	Qty.	Description
10	98-9678	1	Idle Apparatus ASM
20	112-7014	1	Adjusting Bolt ASM
30	98-9439	1	Nut
40	99-8387	1	Nut-Cap
50	98-7654	2	Gasket
60	98-7656	1	Cap
70	112-7015	1	Bolt-Adjusting
80	99-3512	1	Nut
90	99-8387	1	Nut-Cap
100	98-7654	1	Gasket
110	107-9081	1	Gasket
❷120		1	Pipe-Lock
130	104-5155	1	Solenoid-Stop
140	105-3799	2	Bolt-HSH
150	98-7699	2	Washer-Spring
160	99-3514	1	Cover
170	98-9636	1	Gasket-Pump, Fuel
180	98-7572	2	Nut
190	98-7699	2	Washer-Spring
200	112-7016	1	Cover-Pump

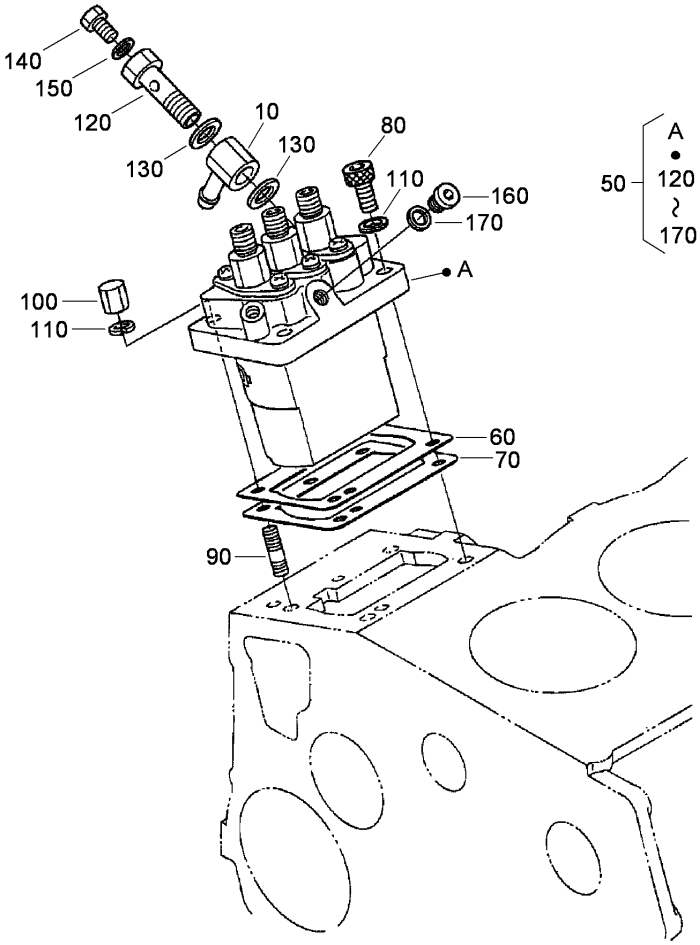

Injection Pump Assembly

Ref	Part No.	Qty.	Description
10	98-9596	1	Joint-Eye
50	98-9643	1	Injection Pump ASM
60	98-9457	1	Shim-Injection (0.25Mm)
60	98-9456	1	Shim (0.2Mm)
70	98-9458	1	Shim-Injection (0.30Mm)
80	98-9361	2	Bolt-HSH
90	98-9438	2	Stud
100	98-9440	2	Nut-Cap
110	98-7699	4	Washer-Spring
120	98-9464	1	Bolt-Joint
130	98-9445	2	Gasket
140	98-9430	1	Screw
150	98-9446	1	Gasket
160	98-9466	1	Plug
170	98-9451	1	Gasket

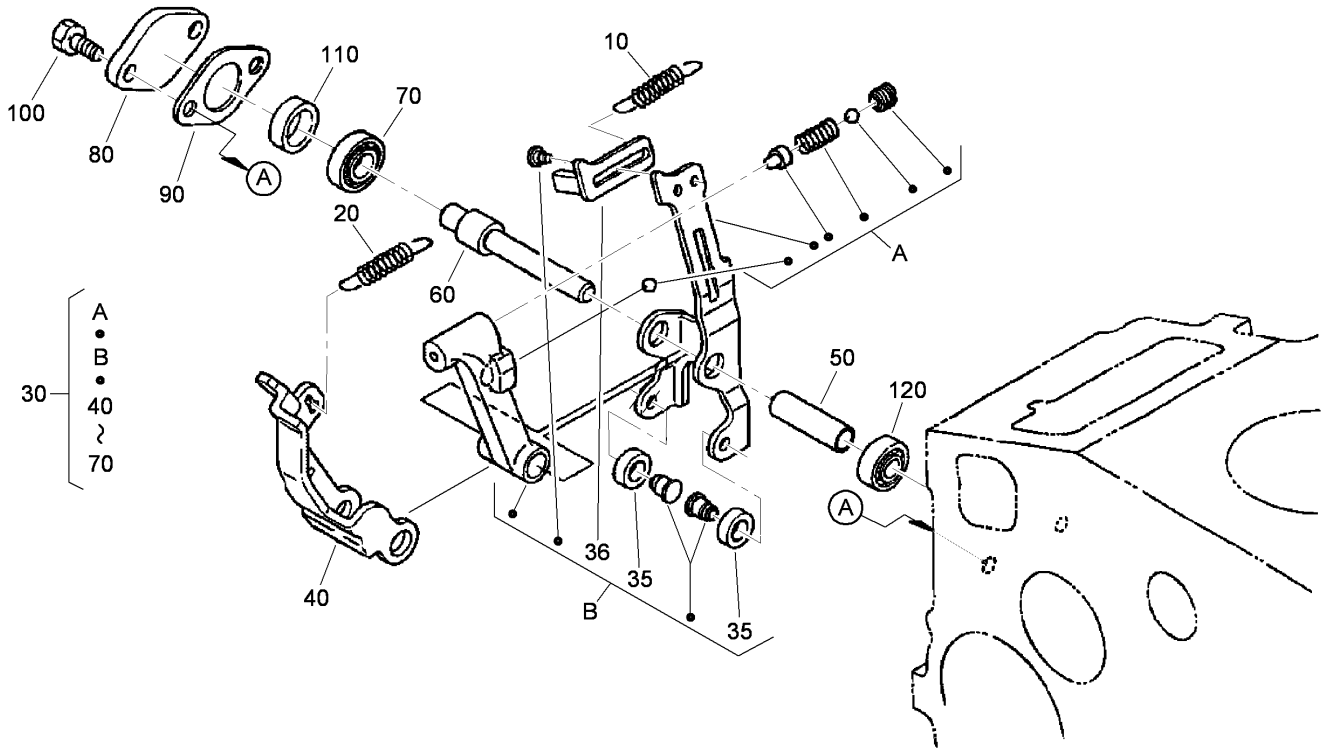

Governor Assembly

Ref	Part No.	Qty.	Description
10	105-3786	1	Spring-Start
20	98-9681	1	Spring-Governor
30	107-9082	1	Fork Lever ASM
35	98-9692	2	Roller
36	107-9083	1	Lever-Thrust
40	107-9084	1	Lever-Fork
50	107-9085	1	Shaft-Lever, Fork
60	107-9086	1	Shaft-Lever, Fork
70	98-9570	1	Bearing-Miniaturize
80	98-9569	1	Cover-Shaft, Fork Lever
90	98-9682	1	Gasket
100	98-9351	2	Bolt
110	98-9567	1	Collar
120	98-9571	1	Bearing-Miniaturize

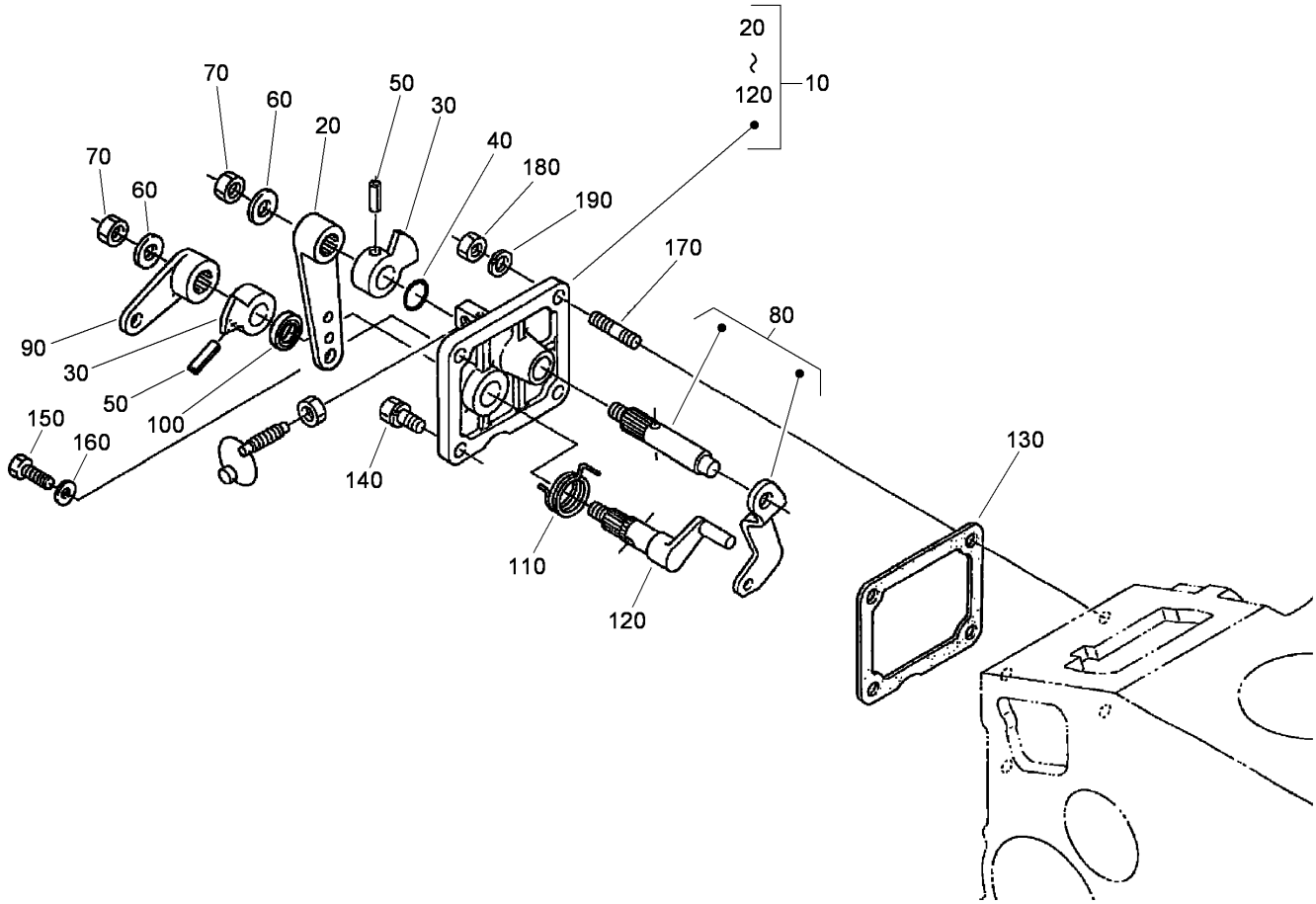

Speed Control Plate Assembly

Ref	Part No.	Qty.	Description
10	105-3735	1	Control Plate ASM
20	98-9662	1	Lever-Control, Speed
30	98-9572	2	Lever-Control, Speed
40	105-3788	1	O-Ring
50	98-7602	2	Pin-Spring
60	98-9594	2	Washer-Plain
70	98-9589	2	Nut
80	98-9658	1	Governor Lever ASM
90	98-9663	1	Lever-Stop, Engine
100	98-7601	1	Seal-Oil
110	98-9472	1	Spring-Return
120	98-9664	1	Shaft-Lever, Stop
130	98-9637	1	Gasket
140	98-7692	1	Bolt
150	99-8348	1	Bolt
160	98-7654	2	Gasket
170	105-3710	2	Stud
180	98-7572	2	Nut
190	98-7699	2	Washer-Spring

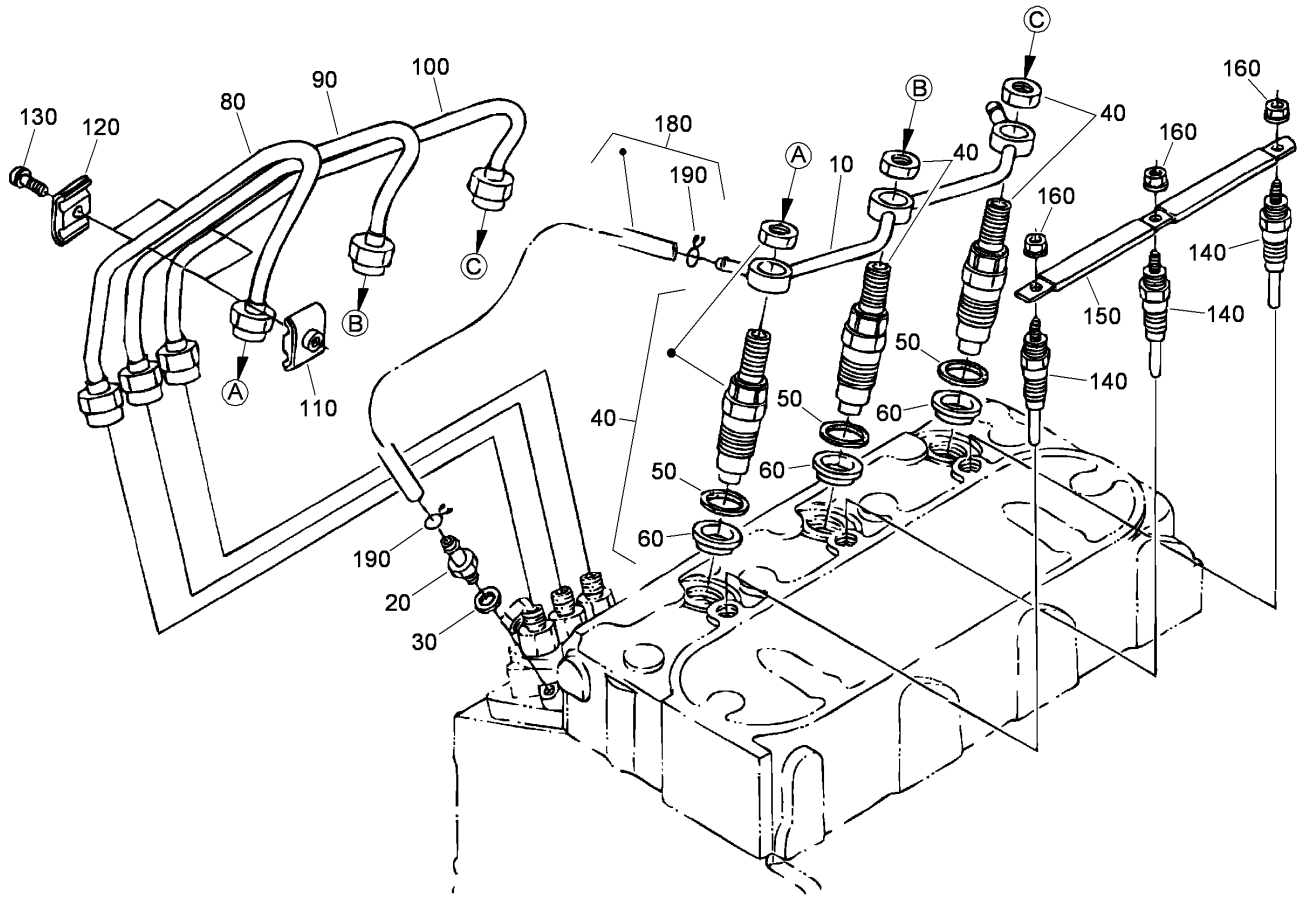

Nozzle Holder and Glow Plug Assembly

Ref	Part No.	Qty.	Description
10	98-9620	1	Over Flow Pipe ASM
20	98-9431	1	Screw-Bleeder
30	98-7654	1	Gasket
40	108-2866	3	Nozzle Holder Kit
50	98-7676	3	Gasket
60	98-7677	3	Seal
80	98-9653	1	Pipe-Injection
90	98-9654	1	Pipe-Injection
100	98-9655	1	Pipe-Injection
110	98-7682	2	Clamp-Pipe
120	98-7683	2	Clamp-Pipe
130	98-7684	2	Screw (W/Washer)
140	98-9695	3	Plug-Glow
150	98-9631	3	Cord-Plug, Glow
160	99-8377	3	Nut-Flange
180	98-9420	1	Over Flow Pipe ASM
190	98-7671	2	Clip-Pipe

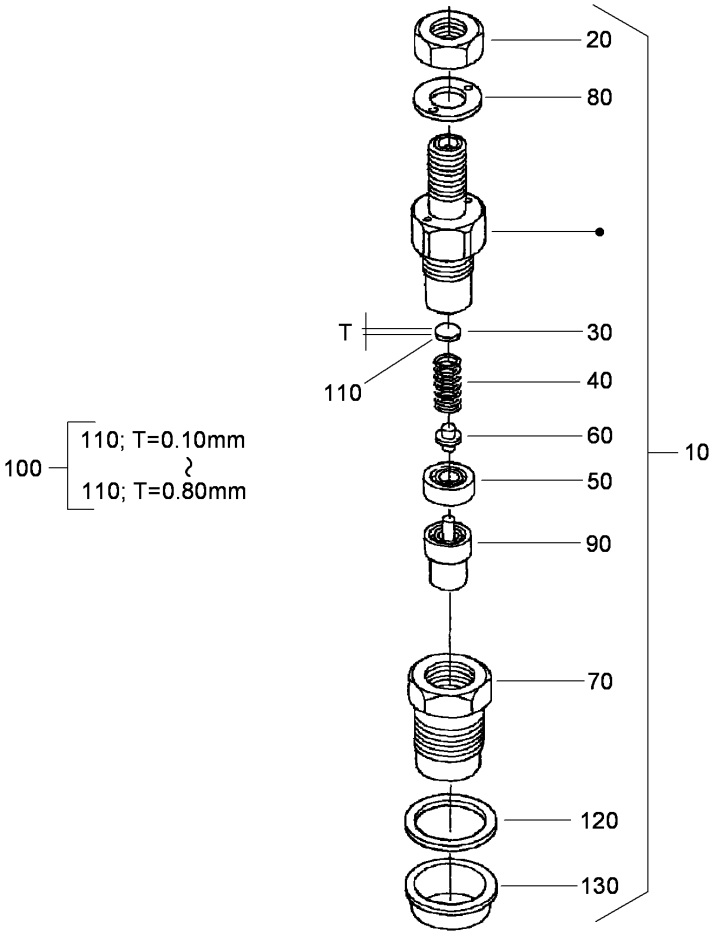

Nozzle Holder Assembly

Ref	Part No.	Qty.	Description
10	108-2866	3	Nozzle Holder Kit
20	99-8301	3	Nut
30	99-8302	3	Washer-Adjusting
40	99-8303	3	Spring-Nozzle
50	99-8304	3	Spacer-Distance
60	99-8305	3	Rod-Push
70	99-8306	3	Nut-Nozzle
80	99-8307	3	Washer-Plain
90	107-7826	3	Piece-Nozzle
100	99-8309	3	Adjusting Washer ASM
110	99-8310	3	Washer-Adjust (0.10Mm)
110	99-8311	3	Washer-Adjust (0.20Mm)
110	99-8312	3	Washer-Adjust (0.30Mm)
110	99-8313	3	Washer-Adjust (0.40Mm)
110	99-8314	3	Washer-Adjust (0.50Mm)
110	99-8315	3	Washer-Adjust (0.52Mm)
110	99-8316	3	Washer-Adjust (0.54Mm)
110	99-8317	3	Washer-Adjust (0.56Mm)
110	99-8318	3	Washer-Adjust (0.58Mm)
110	99-8319	3	Washer-Adjust (0.80Mm)
120	98-7676	3	Gasket
130	98-7677	3	Seal

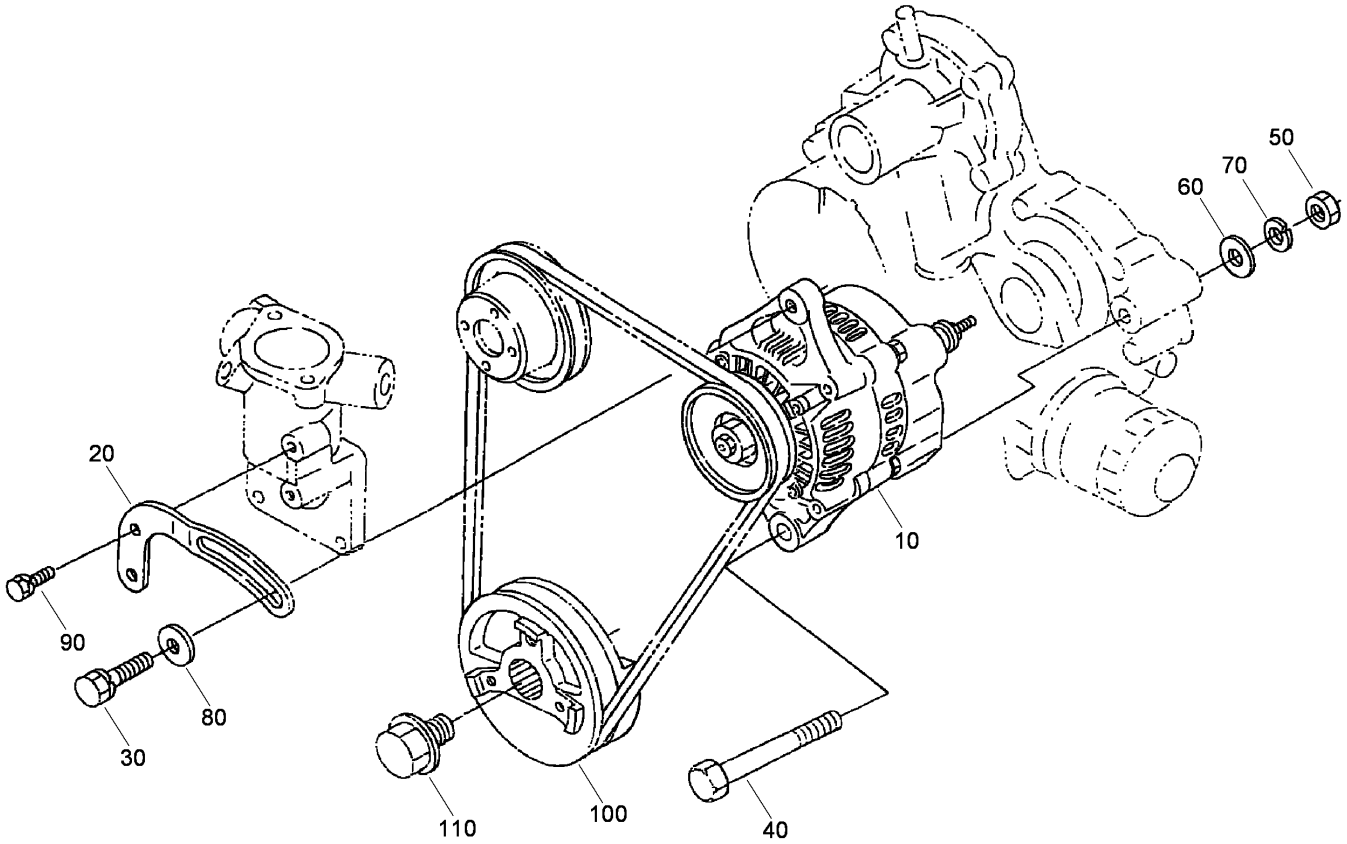

Alternator and Pulley Assembly

Ref	Part No.	Qty.	Description
10	98-9474	1	Alternator ASM
20	98-9573	1	Stay-Dynamo
30	108-7088	1	Bolt
40	98-9360	1	Bolt
50	98-7737	1	Nut
60	3256-24	1	Washer-Flat
70	98-7738	1	Washer-Spring
80	100-9233	1	Washer-Plain
90	98-7692	1	Bolt
100	98-9473	1	Pulley-Drive, Fan
110	98-9585	1	Bolt

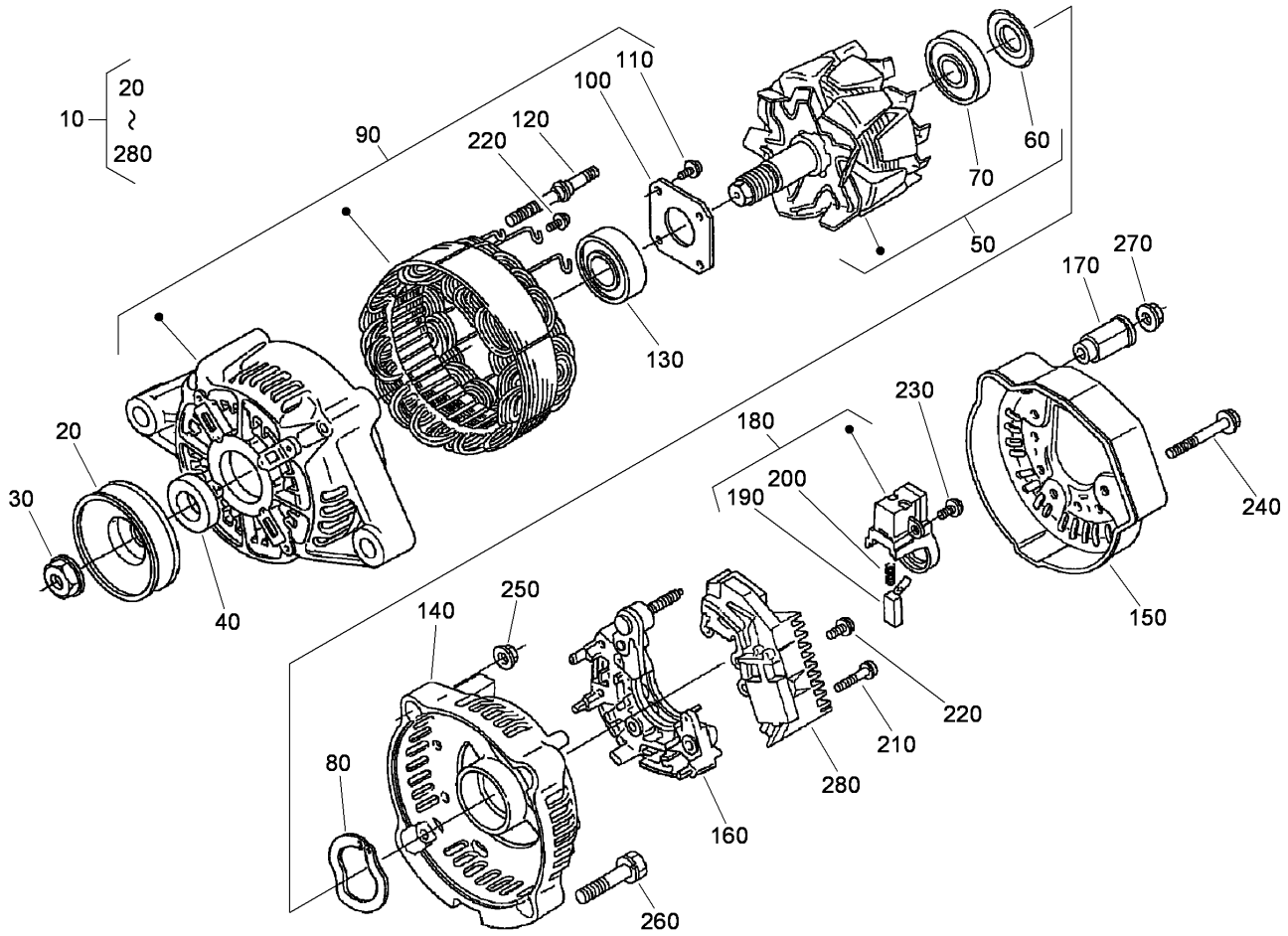

Alternator Components

Ref	Part No.	Qty.	Description
10	98-9474	1	Alternator ASM
20	98-9453	1	Pulley-Dynamo
30	98-7708	1	Nut
40	98-7709	1	Collar
50	107-0136	1	Rotor
60	98-7711	1	Cover-Bearing
70	107-0138	1	Bearing-Ball
80	98-7713	1	Washer-Thrust
90	107-0139	1	Drive End Frame ASM
100	98-7715	1	Plate-Retainer
110	98-7716	4	Screw-Head, Round
120	98-7717	2	Bolt-Through
130	107-0137	1	Bearing-Ball
140	107-9087	1	Frame-End
150	107-0140	1	Cover-End
160	98-7721	1	Rectifier ASM
170	98-7722	1	Bushing-Insulation
180	107-0141	1	Holder-Brush
190	98-7724	2	Brush
200	98-7725	2	Spring-Brush
210	98-7726	2	Screw-Head, Round
220	98-7727	6	Screw-Head, Round
230	98-7728	1	Screw-Head, Round
240	98-7729	3	Bolt

Ref	Part No.	Qty.	Description
250	98-7730	2	Nut
260	98-7731	2	Bolt
270	98-7732	1	Nut
280	110-3799	1	Regulator ASM

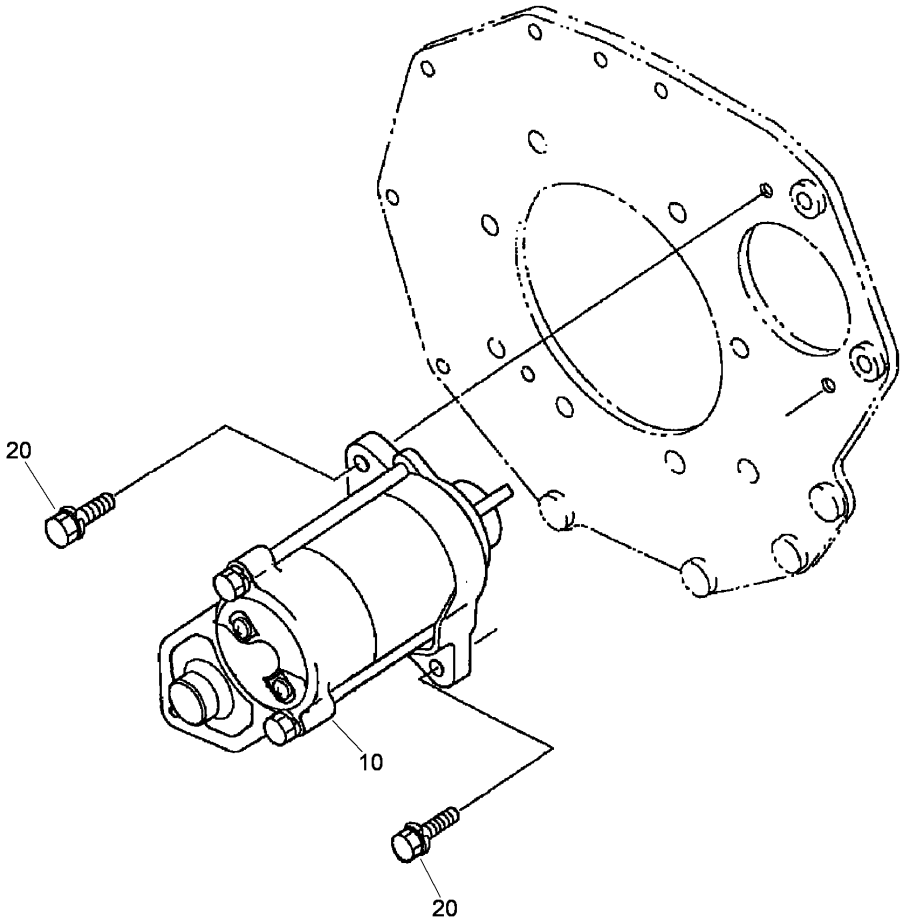

Starter Assembly

Ref	Part No.	Qty.	Description
10	98-9705	1	Starter ASM
20	98-7697	2	Bolt

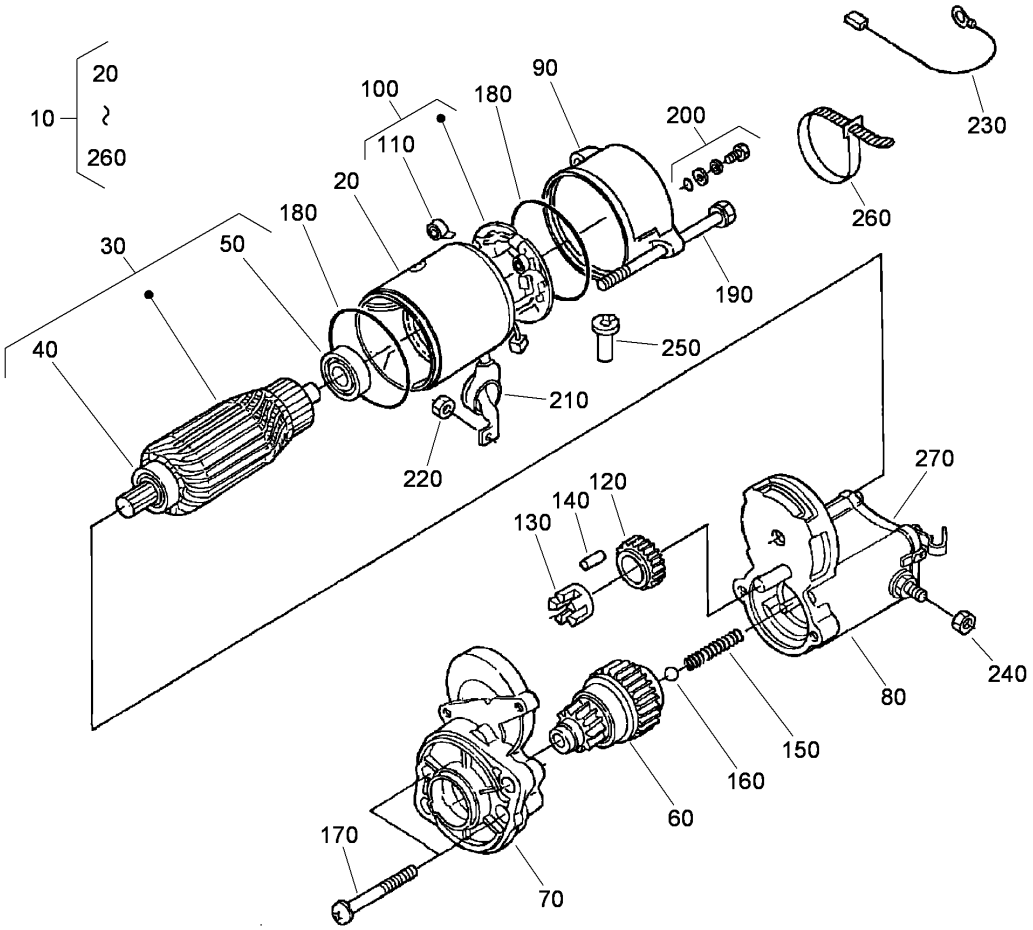

Starter Component Assembly

Ref	Part No.	Qty.	Description
10	98-9705	1	Starter ASM
20	104-8608	1	Yoke ASM
30	98-7742	1	Armature ASM
40	98-7744	1	Bearing
50	98-7743	1	Bearing
60	99-8373	1	Clutch-Running, Over
70	99-8374	1	Frame-End, Drive
80	105-3746	1	Magnetic Switch ASM
90	98-7748	1	Frame-End
100	98-7749	1	Brush Holder ASM
110	98-7750	4	Spring-Brush
120	98-7751	1	Gear
130	98-7752	1	Retainer
140	98-9707	5	Roller
150	98-7754	1	Spring
160	98-7755	1	Ball
170	98-7756	2	Bolt
180	98-7757	2	O-Ring
190	100-9240	2	Bolt
200	98-7758	2	Bolt ASM
210	99-8375	1	Cover
220	99-8371	1	Nut-Hex
230	98-9711	1	Cord-Solenoid, Stop
240	99-8376	1	Nut-Hex

Ref	Part No.	Qty.	Description
250	98-7759	1	Pipe-Drain
260	98-9712	1	Band-Cover
270	105-2886	1	Cover ASM

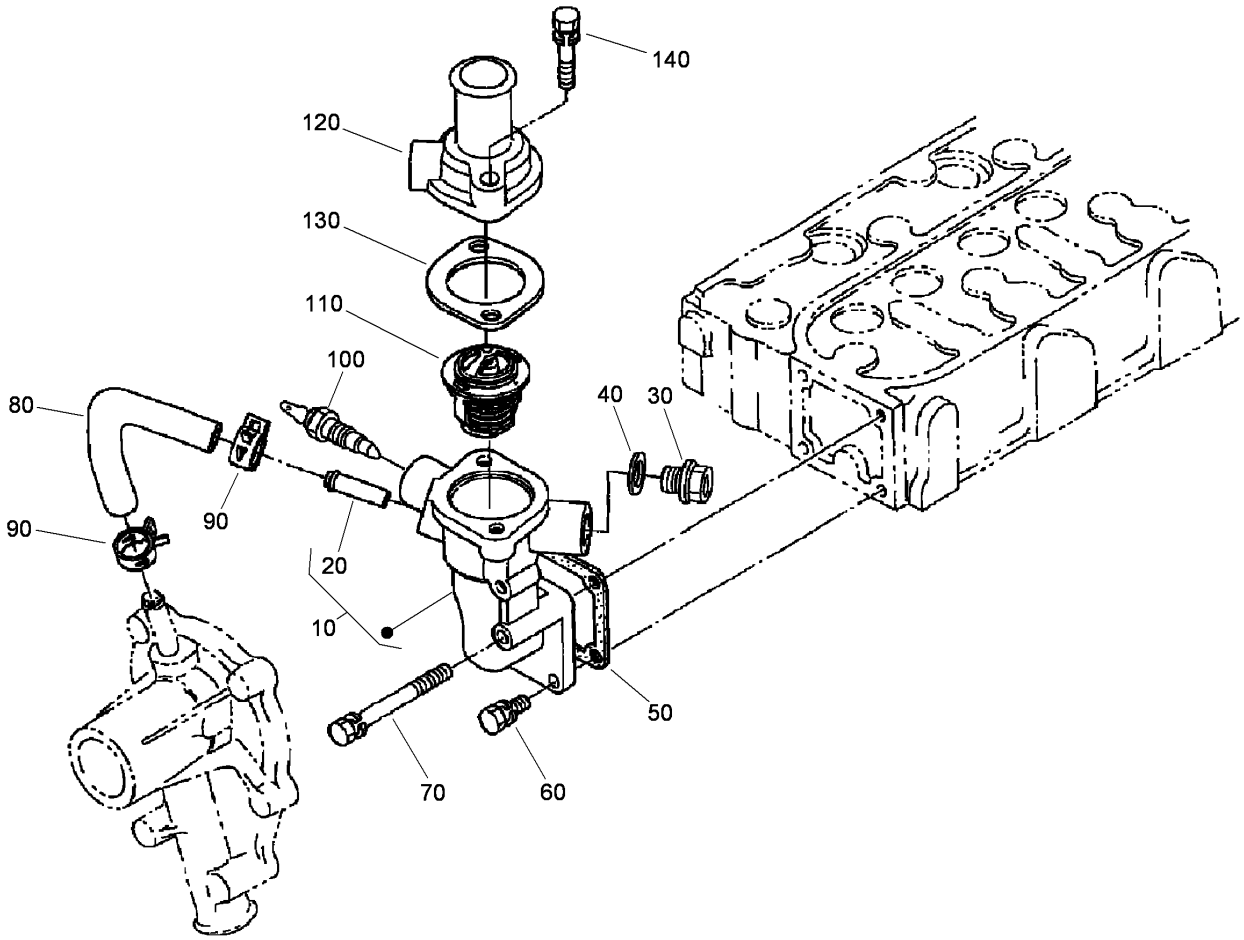

Water Flange and Thermostat Assembly

Ref	Part No.	Qty.	Description
10	98-9713	1	Water Flange ASM
20	98-9580	1	Pipe-Return, Water
30	105-3747	1	Plug
40	99-3583	1	Packing
50	98-9638	1	Gasket-Flange, Water
60	98-7692	3	Bolt
70	98-9356	1	Bolt
80	98-9578	1	Pipe-Return, Water
90	98-9579	2	Band-Pipe
100	98-9719	1	Thermoswitch
110	98-7778	1	Thermostat ASM
120	98-9471	1	Cover-Thermostat
130	105-3748	1	Gasket-Thermostat
140	98-7777	2	Bolt

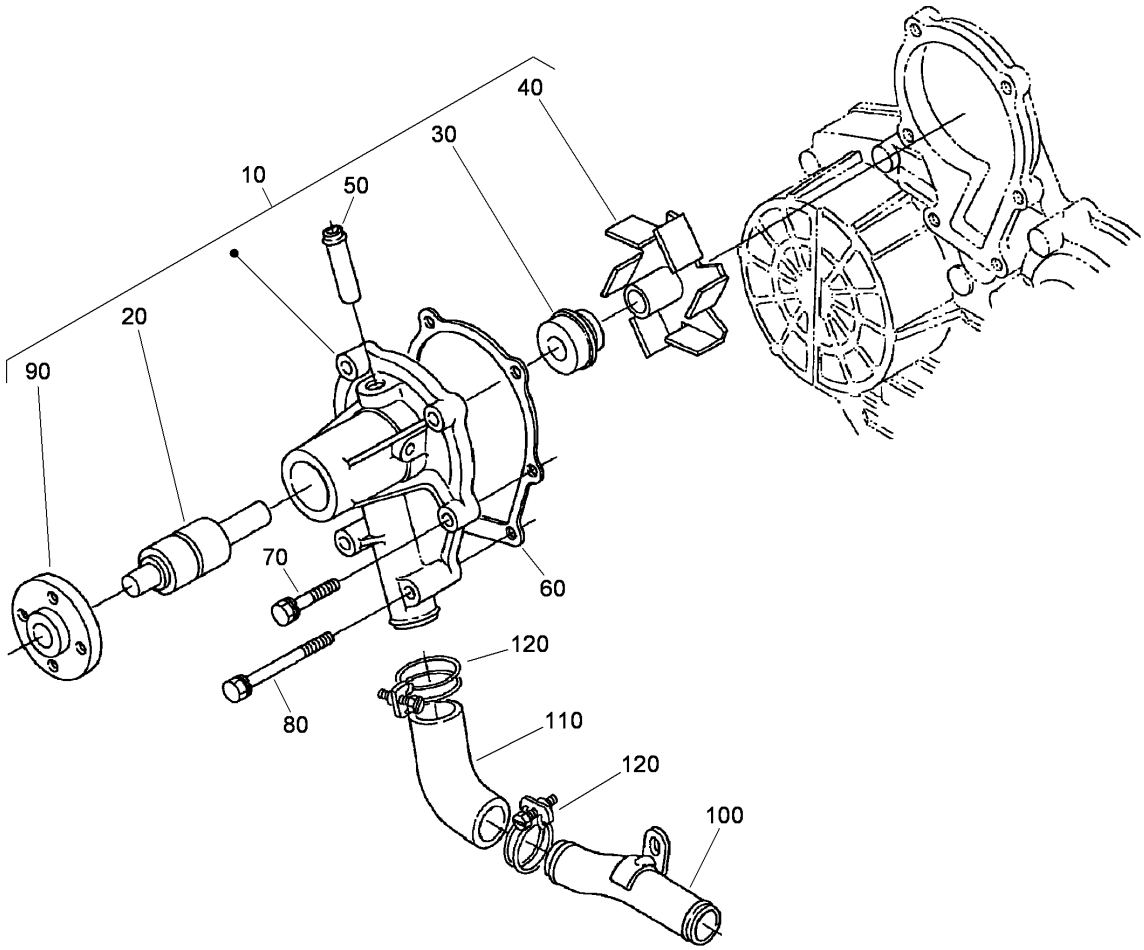

Water Pump Assembly

Ref	Part No.	Qty.	Description
10	107-9089	1	Water Pump ASM
20	99-3517	1	Bearing-Pump, Water
30	105-3750	1	Mechanical Seal ASM
40	112-8403	1	Impeller ASM
50	100-1932	1	Pipe-Return, Water
60	99-3454	1	Gasket-Pump, Water
70	98-9353	4	Bolt
80	107-9090	2	Bolt
90	99-3516	4	Flange-Pump, Water
100	98-9716	1	Pipe-Water
110	107-9091	1	Pipe-Water
120	98-9717	2	Clamp

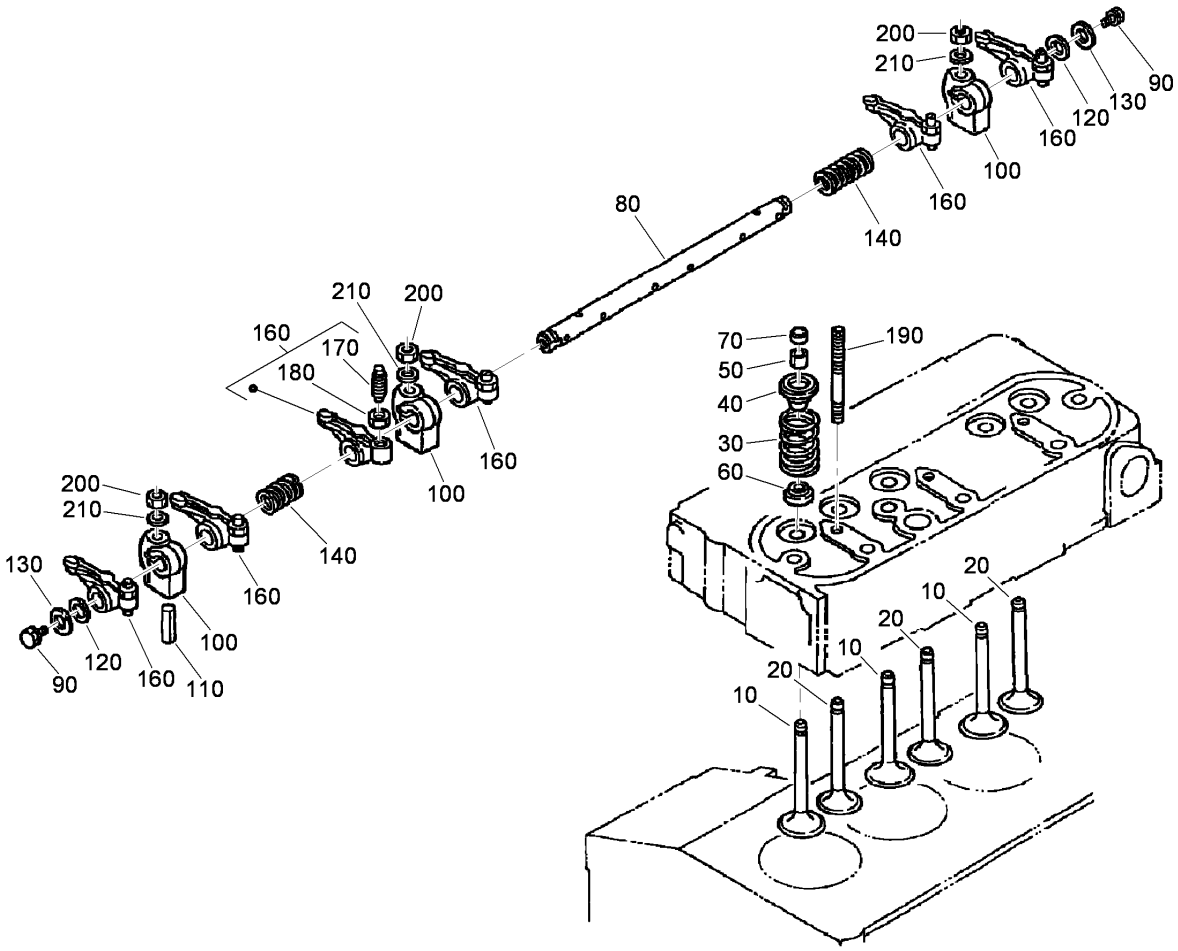

Valve and Rocker Arm Assembly

Ref	Part No.	Qty.	Description
10	112-7018	3	Valve-Inlet
20	98-9495	3	Valve-Exhaust
30	98-9648	6	Spring-Valve
40	107-9092	6	Retainer-Spring
50	98-9390	6	Collet-Set, Valve Spring
60	99-8385	6	Seat-Stem, Valve
70	98-9497	6	Cap-Valve
80	105-3790	1	R-Arm Shaft ASM
90	100-9265	2	Bolt
100	98-9505	3	Bracket-Arm, Rocker
110	105-3758	1	Pin-Spring
120	98-9507	2	Washer-Shaft, R-Arm
130	3256-1	2	Washer-Flat
140	98-9504	2	Spring-Arm, Rocker
160	98-9501	6	Rocker Arm ASM
170	98-9502	6	Screw-Adjusting
180	98-9503	6	Nut
190	98-9506	3	Stud
200	98-9393	3	Nut
210	98-9385	3	Washer-Flat

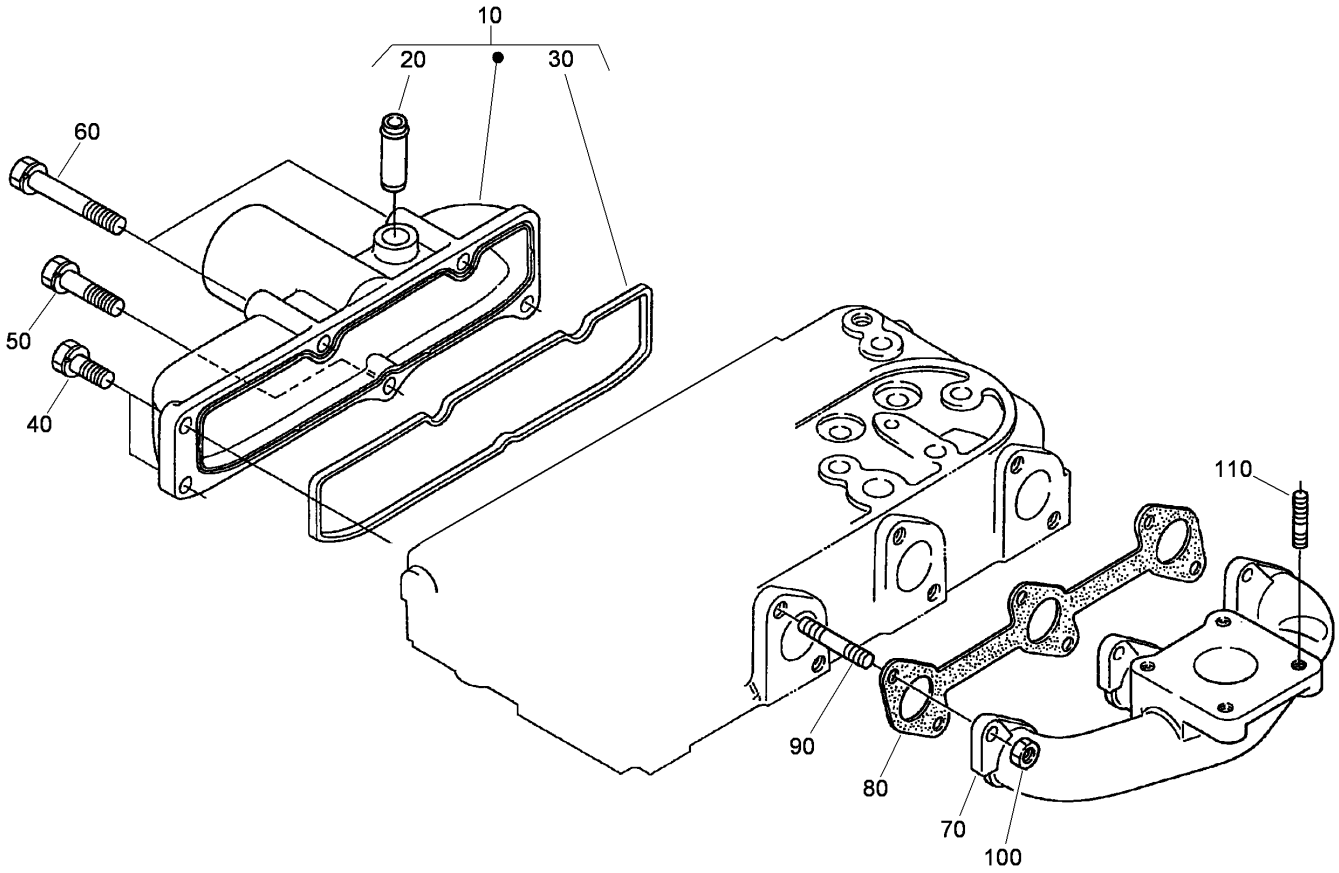

Inlet Manifold Assembly

Ref	Part No.	Qty.	Description
10	108-6577	1	Inlet Manifold ASM
20	98-9492	1	Joint-Pipe, Breather
30	98-9609	1	Gasket
40	98-7605	3	Bolt
50	98-9353	1	Bolt
60	105-3797	2	Bolt
70	107-9093	1	Manifold-Exhaust
80	99-8327	1	Gasket-Manifold, Exhaust
90	98-9588	6	Stud
100	98-9665	6	Nut
110	98-7769	4	Stud

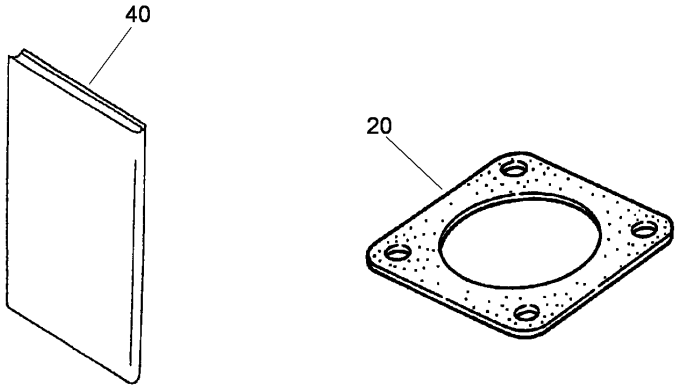

Muffler Gasket and Operator Manual

Ref	Part No.	Qty.	Description
20	99-8343	1	Gasket-Muffler
40	99-8954	1	Manual-Kubota

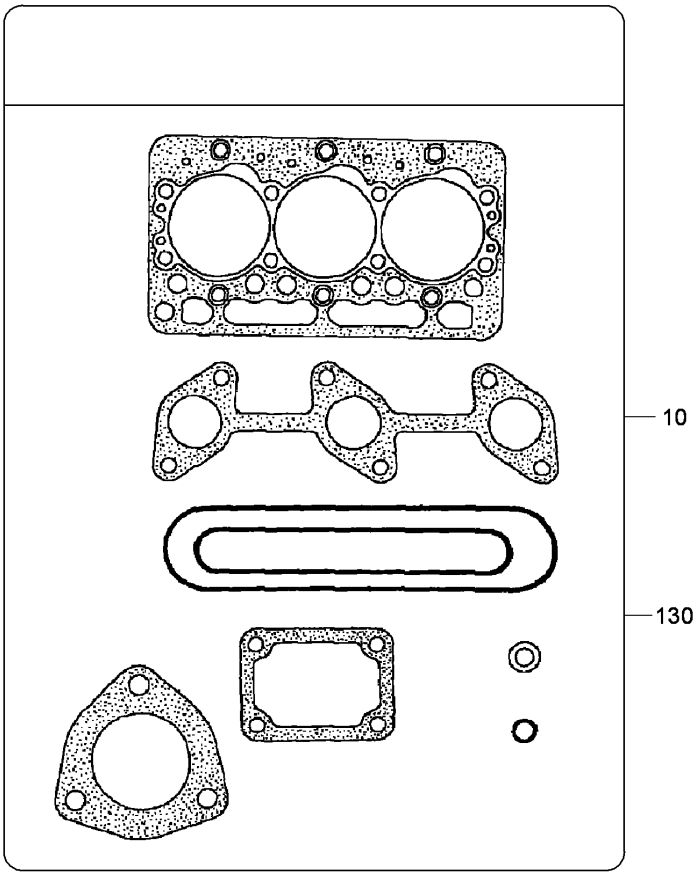

Upper and Lower Gasket Kits

Ref	Part No.	Qty.	Description
10	107-7848	1	Upper Gasket Kit
130	107-9095	1	Lower Gasket Kit

Attachments and Accessories

For 30344 - Groundsmaster 3280-D Traction Unit

Product Name	Model/Part
Premium Engine Oil, 10w30 (Drum)	108-1179
Premium Engine Oil, 10w30 (Pail)	108-1180
Premium Engine Oil, 15w40 (Drum)	108-1181
Premium Engine Oil, 15w40 (Pail)	108-1182
Premium Transmission/Hydraulic Tractor Fluid (Drum)	108-1183
Premium Transmission/Hydraulic Tractor Fluid (Pail)	108-1184
Premium All Purpose Grease	108-1190
Wheel	108-6563
Wheel And Tire ASM (Wide Tire Option)	108-6598
Armrest Adapter Kit	108-9687
Wheel Weight Kit	11-0440
Auxiliary Valve Kit	110-5670
Implement Flow Control Kit	110-5699
Blower Drive and Mounting Kit	110-8539
Attachment Frame Kit	110-8540
Element-Safety, 5 Inch	114-4057
Tire	231-95
Rear Weight Kit	24-5780
V-Plow Mounting Kit	30311
Mechanical Seat Suspension Kit	30312
Pneumatic Seat Suspension Kit	30313
15 Cubic Foot Bagger Kit	30356
60 Inch Blower Kit	30357
Bimini Sunshade for 2-Post Roll-Over Protection System	30358
Hardtop Sunshade	30359
60 Inch Side Discharge Mower	30366
62 Inch Rear Discharge Mower	30367
72 Inch Side Discharge Mower	30368
72 Inch Rear Discharge Mower	30369
62 Inch Guardian Recycler Mower	30376
72 Inch Guardian Recycler Mower	30379
Auxiliary Power Unit	30382
Cab ASM	30391
Standard Seat Kit	30398
52 Inch Blower Kit	30502
52 Inch Side Discharge Mower	30555
Arm Rest Kit	30707
48 Inch V-Plow	30750
Debris Blower	30823
Tire	69-9880
Spark Arrestor Screen	75-6880
Tire Chains (23 x 9.50-12)	82531

NOTES

NOTES

TORO®