FORM NO. 3315–279A

TORO®

MODEL NO. 20927B–2000001 & UP

PARTS CATALOG

48cm REAR BAGGING MOWER

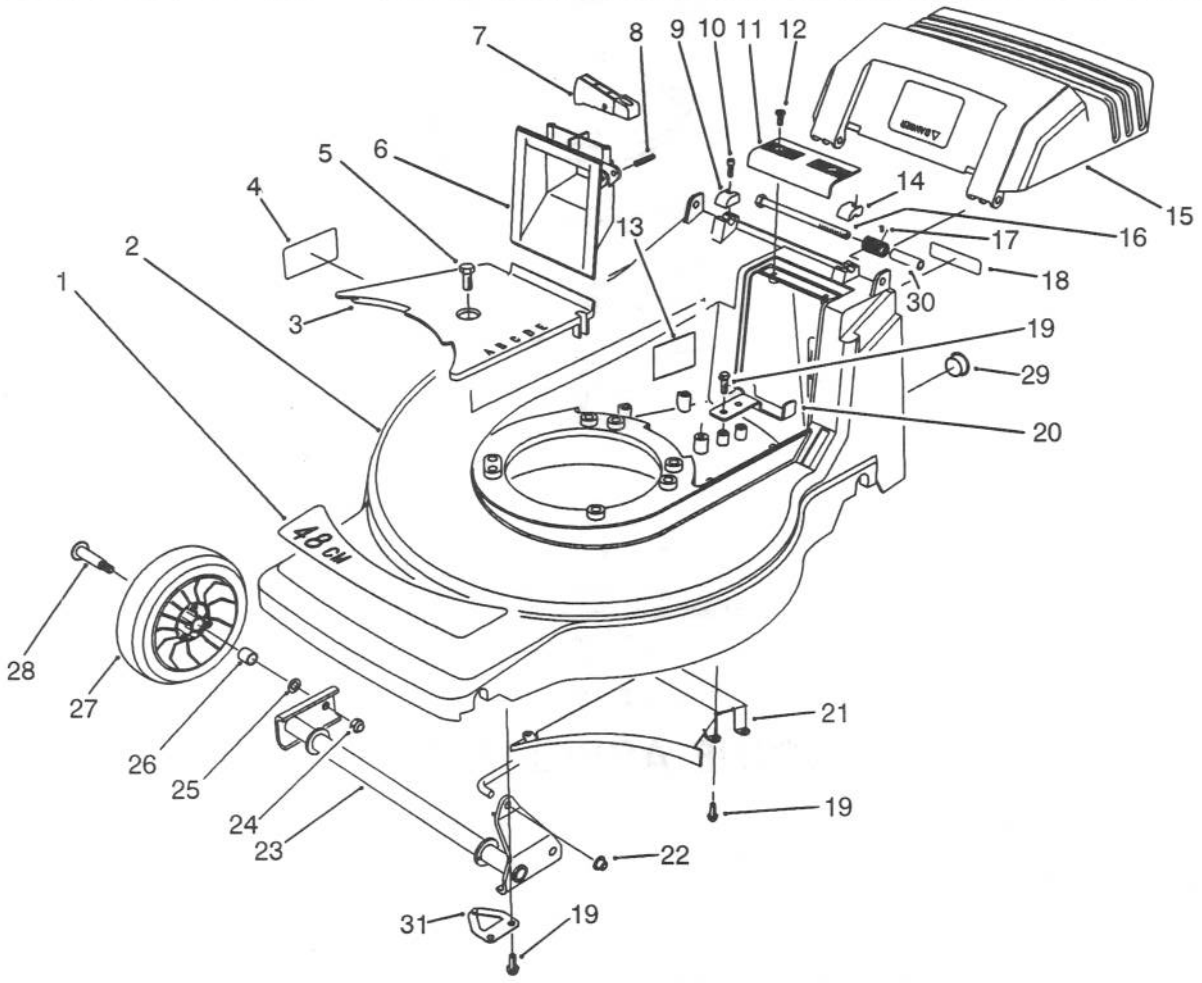

C–0589

HOUSING ASSEMBLY

Ref. No.	Part No.	Description	No. Used
1	71–8290	Decal – 48cm	1
2	14–0049	Housing – 48cm (Incl. Ref. #1, 4, & 13)	1
3	71–7920	Cover – Belt	1
4	62–3860	Decal – Danger	1
5	32144–70	Screw – Hex. Flange Hd.	1
6	71–7870	Grip – Lower	1
7	71–7930	Trigger – H.O.C.	1
8	3284–5	Pin – Roll	1
9	71–7910	Cap – Hinge Bolt R.H.	1
10	65–5210	Screw – Thread Forming	2
11	71–7860	Grip – Upper	1
12	32144–97	Screw – Thread Forming	2
13	66–1700	Decal – Noise Rating	1
14	71–7900	Cap – Hinge Bolt L.H.	1
15	71–8240	Door – Discharge	1
16	322–29	Screw – Cap Hex. Hd.	2

Ref. No.	Part No.	Description	No. Used
17	71–8300	Spring – Door	2
18	66–0680	Decal – French Regulation	1
19	32144–4	Screw – Thread Forming	10
20	71–7890	Guide – Belt Rear	1
21	71–7990	Ramp – Discharge	1
22	32112–11	Nut – Push	1
23	71–7820	Pivot – Front	1
24	3296–5	Nut – Lock	2
25	40–1940	Washer – Wheel	2
26	27–6250	Bushing – Wheel	4
27	46–1113	Wheel & Tire Assembly (Incl. Ref. #26)	2
28	27–6230	Bolt – Wheel	2
29	2410–74	Plug – Hole	1
30	71–8580	Spacer – Door	2
31	71–8750	Retainer – Shaft	2

©The TORO Company – 1992

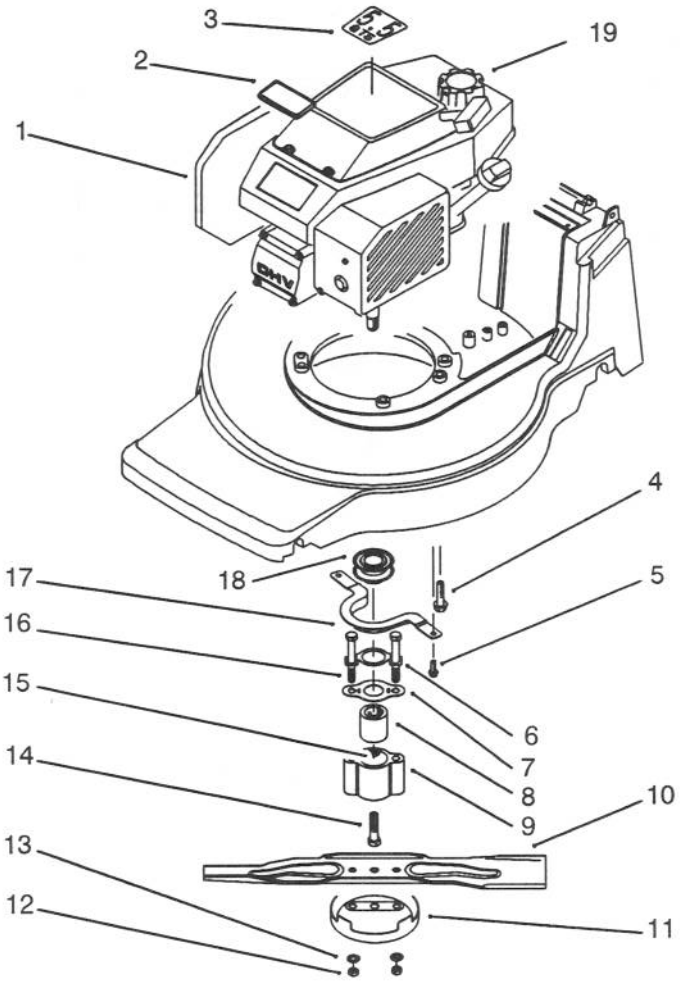

C–1158

ENGINE ASSEMBLY

Ref. No.	Part No.	Description	No. Used
1	77–8950	Engine – Complete	1
2	76–4710	Plate – Toro Logo	1
3	80–4800	Decal – Recoil	1
4	11–0590	Screw – Thread Forming	3
5	32144–4	Screw – Thread Forming	2
6	71–9220	Bracket – Retainer	1
7	71–8840	Spring – Friction	1
8	71–8780	Hub – Crankshaft	1
9	71–8790	Retainer – Blade	1
10	71–8210	Blade – 48cm	1

Ref. No.	Part No.	Description	No. Used
11	80–2770	Cup – Anti–Scalp	1
12	3296–6	Nut – Lock	2
13	40–1940	Washer	2
14	71–8950	Screw – Crankshaft	1
15	3253–22	Washer – Lock	1
16	71–8940	Screw – Blade	2
17	71–7960	Guide – Engine Belt	1
18	62–7550	Pulley – Driver	1
19	55–3570	Cap – Gas	1

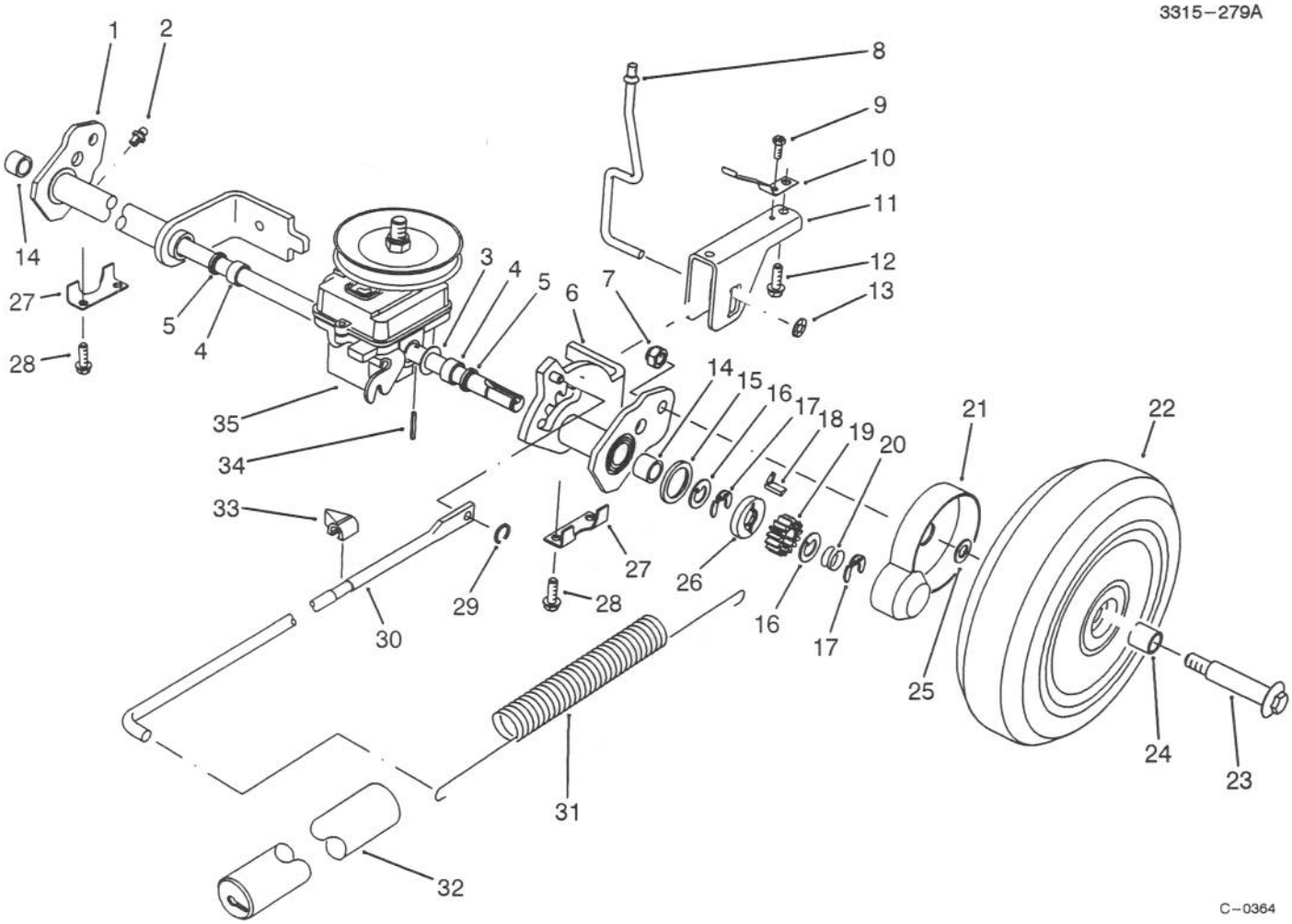

C–0364

S. P. REAR AXLE ASSEMBLY

Ref. No.	Part No.	Description	No. Used
1	71–8430	Rear Pivot Assembly R.H. (Incl. Ref. #2, 4, 5 & 14)	1
2	302–26	Fitting – Grease	2
3	36–4780	Washer	2
4	47–2890	Bushing – Sleeve	2
5	47–6730	Seal – Grease	2
6	71–8440	Rear Pivot Assembly L.H. (Incl. Ref. #2, 4, 5 & 14)	1
7	3296–5	Nut – Lock	2
8	71–7840	Rod – Trigger	1
9	32144–31	Screw – Thread Forming	1
10	71–8060	Spring – Trigger Return	2
11	71–8080	Saddle – H.O.C.	1
12	63–8590	Screw – Thread Forming	2
13	32112–13	Nut – Push	1
14	48–2060	Bearing – Needle	2
15	65–4710	Washer – Friction	2
16	65–4740	Washer – Keyed Thrust	4
17	65–2720	Ring – Retaining	4
18	66–6050	Key – Rocking L.H.	1
*	66–6040	Key – Rocking R.H.	1

Ref. No.	Part No.	Description	No. Used
19	65–4750	Gear – Pinion	2
20	65–4720	Spring – Compression	2
21	74–1660	Cover – Wheel	2
22	11–9519	Wheel, Tire & Gear Assy. (Incl. Ref. #24)	2
23	27–6230	Bolt – Wheel	2
24	27–6250	Bushing – Wheel	4
25	74–1670	Spacer – Wheel	2
26	65–4760	Washer – Clutch	2
27	71–7770	Plate – Rear Suspension	2
28	32144–4	Screw – Thread Forming	4
29	32151–93	Ring – Grip	1
30	71–7970	Rod – Link	1
31	71–7740	Spring – Counterbalance	1
32	71–8450	Cover – Spring	1
33	71–7980	Indicator – H.O.C.	1
34	32121–88	Pin – Roll	2
35	71–8250	Gearbox Assembly	1

*Not Illustrated

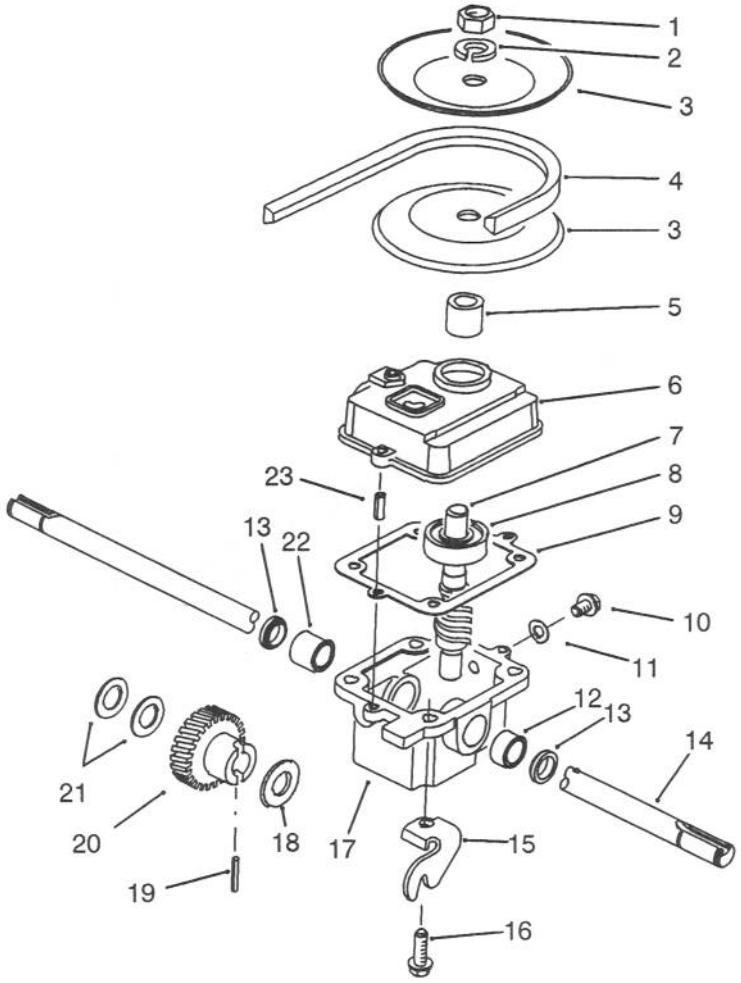

C–0365

GEARBOX ASSEMBLY NO. 71–8250

Ref. No.	Part No.	Description	No. Used
1	3220–4	Nut – Jam	1
2	3253–6	Washer – Lock	1
3	71–7750	Pulley – Half	2
4	71–8500	Belt – V	1
5	71–7570	Spacer – Pulley	1
6	39–1103	Cover – Gearbox	1
7	71–8050	Shaft & Worm	1
8	47–7250	Bearing – Ball	1
9	36–1000	Gasket – Gearbox	1
10	28–1550	Screw – Drain	1
11	46–9640	Gasket – Drain Screw	1
12	47–2890	Bushing – Sleeve	1

Ref. No.	Part No.	Description	No. Used
13	47–6730	Seal – Oil	2
14	71–7880	Shaft – Output	1
15	71–8120	Bracket – Traction	1
16	49–2040	Screw – Thread Forming	4
17	33–2061	Case – Gearbox	1
18	3–0724	Washer – Thrust	1
19	32121–120	Pin – Roll	1
20	71–8140	Gear – Helical	1
21	36–4780	Washer – Thrust	2
22	47–2900	Bushing – Sleeve	1
23	32121–1	Pin – Roll	2

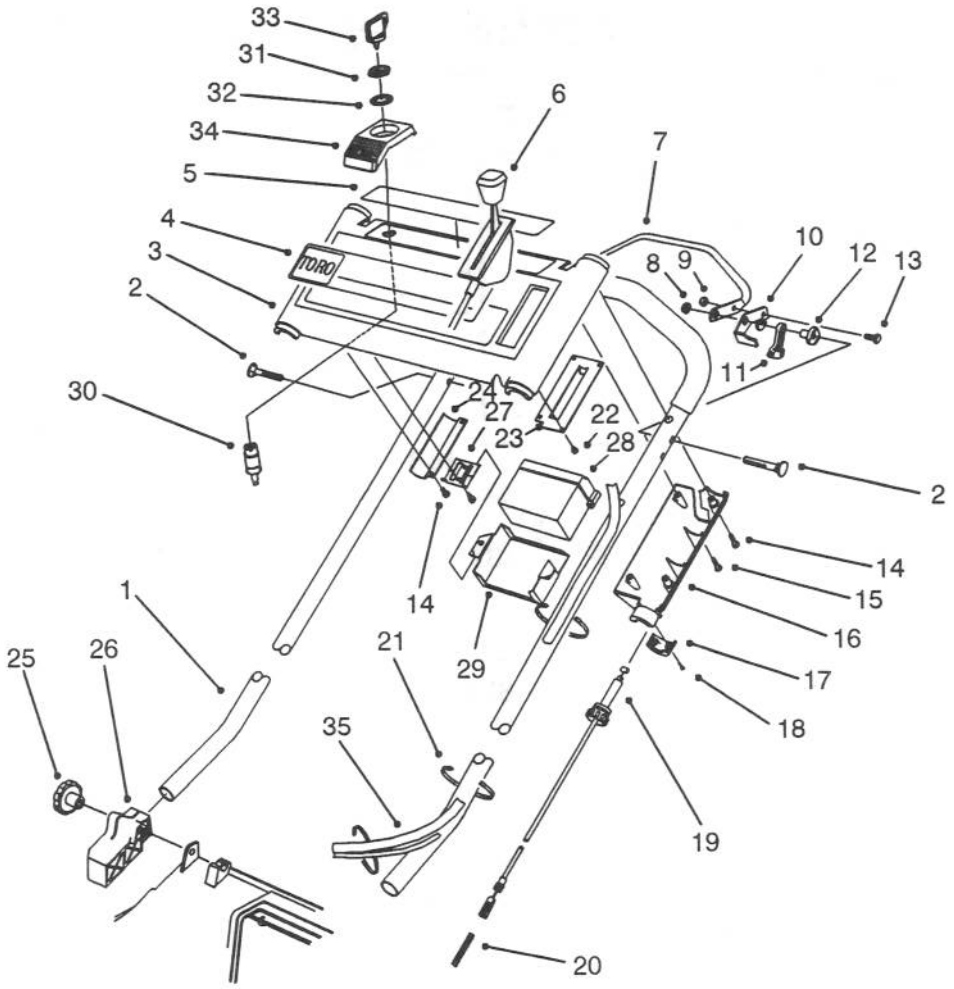

C–0517

S. P. HANDLE ASSEMBLY

Ref. No.	Part No.	Description	No. Used
1	71–9020	Handle	1
2	17–9426	Screw – Handle	2
3	14–0509	Panel – Control (Incl Ref. #4, & 5)	1
4	71–8330	Decal – TORO Logo	1
5	71–8570	Decal – Danger	1
6	71–8393	Control – Throttle Bend Type #1 Sheath Lg. 42.50 Wire Lg. 2 1/2	1
7	46–9900	Bar – Control	1
8	3296–29	Nut – Flange Lock	2
9	3296–42	Nut – Lock	1
10	46–8800	Lever – Control	1
11	46–5520	Lever – Traction	1
12	66–0330	Support – Spacer	2
13	321–3	Screw – Cap Hex. Hd.	1
14	32144–97	Screw – Thread Forming	9
15	32104–121	Screw – Thread Forming	1
16	71–7680	Cover – Throttle Lower	1
17	71–7630	Cap – Throttle Lower	1

Ref. No.	Part No.	Description	No. Used
18	32144–99	Screw – Thread Forming	2
19	71–8110	Cable – Traction	1
20	71–8310	Spring – Gearbox Return	1
21	3290–378	Tie – Cable	3
22	32144–98	Screw – Thread Forming	4
23	71–8040	Plate – Throttle	1
24	71–8130	Bracket – Panel	1
25	19–4050	Knob – Handle	2
26	71–8100	Mount – Handle R.H.	1
*	71–8090	Mount – Handle L.H.	1
27	71–8280	Bracket – Battery	2
28	55–7520	Battery Ass'y	1
29	55–8180	Retainer – Battery	1
30	46–5780	Switch – Starter (Incl. Ref. #31, & 32)	1
31	218–461	Nut – Lock	1
32	3254–5	Washer – Lock	1
33	63–8360	Key – Ignition	1
34	71–8200	Bracket – Ignition Switch	1
35	80–4791	Wire Harness	1

*Not Illustrated

ENGINE GTS-150 77-9130

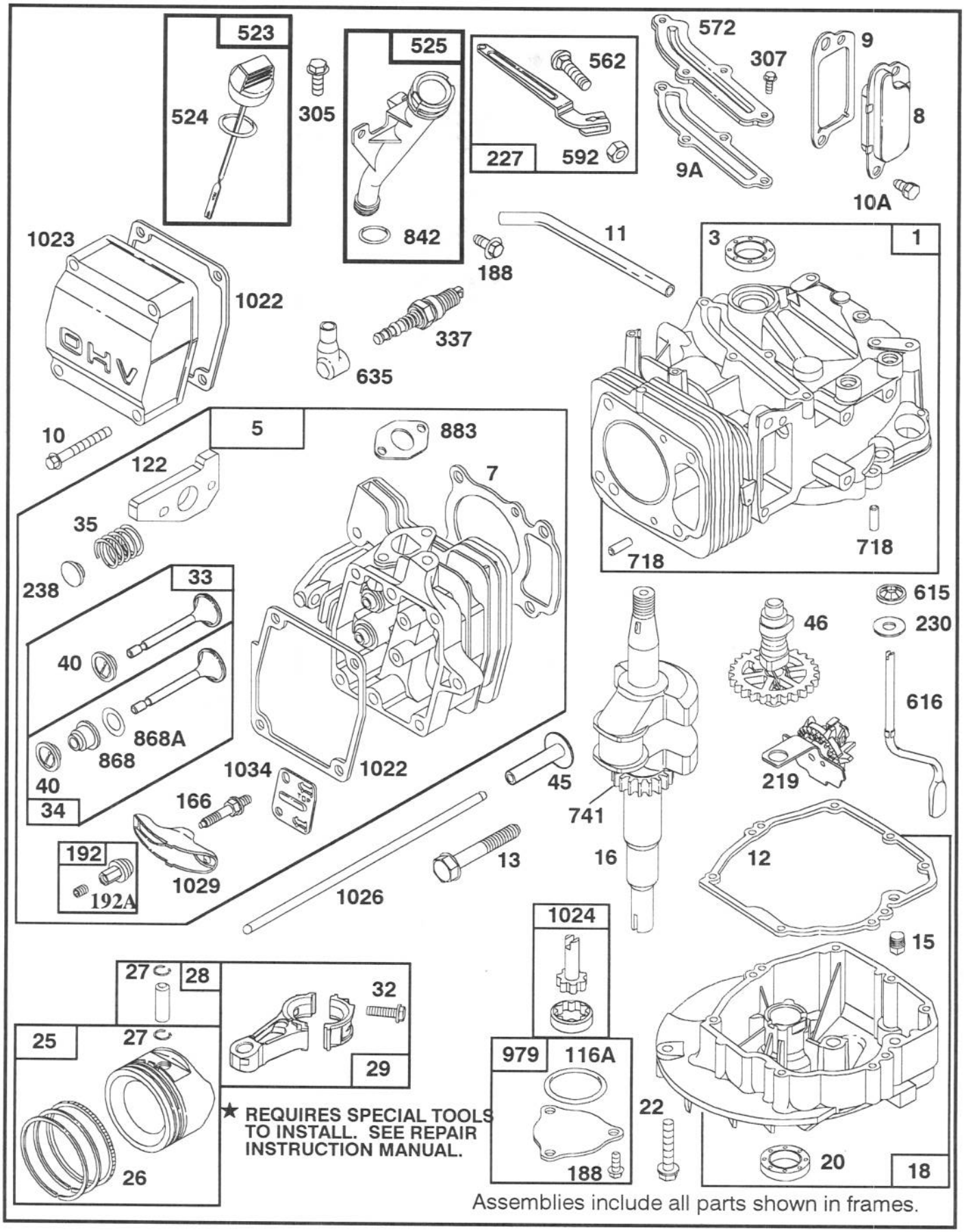

ENGINE GTS-150 77-9130

Ref. No.	Part No.	Description	No. Used
1	77-7590	Cylinder Assy.	1
*3	77-9060	Seal - Oil	1
5	77-7730	Head - Cylinder	1
*7	77-7740	Gasket - Cylinder Head	1
8	77-7430	Breather Valve	1
*9	77-7440	Gasket - Valve Cover	1
*9A	77-7410	Gasket - Breather	1
10	77-7360	Screw - Hex. Head (valve cover)	4
10A	77-9200	Screw - Hex Hd.	1
11	77-7350	Tube - Breather	1
*12	77-7550	Gasket - Engine Base	1
13	77-7630	Screw - Cylinder Head	4
15	77-7580	Plug - Oil Drain	1
16	77-7520	Crankshaft Note: Order Part No. 77-7540 For Timing Gear Key	1
18	77-7560	Base - Engine	1
*20	77-7570	Seal - Oil	1
22	77-9070	Screw - Engine Base Note: Order Part No. 77-9080 For Hole Nearest Breather	1
25	77-7690	Piston Assy. (Std.)	1
26	77-7700	Ring Set (Std.)	1
27	77-7710	Lock - Piston Pin	2
28	77-7720	Pin - Piston (STD)	1
29	77-7670	Rod - Connecting	1
32	77-7680	Screw - Connecting Rod	2
33	77-7860	Valve - Exhaust	1
34	77-7880	Valve - Intake	1
35	77-7810	Spring - Valve	2
40	77-7870	Retainer - Spring	2
45	77-7610	Tappet - Valve	2
46	77-7490	Gear - Cam	1
*116A	77-7660	Seal - O Ring	1
†122	77-7820	Adapter Assy.	1

Ref. No.	Part No.	Description	No. Used
166	77-7780	Stud - Rocker Arm	2
188	77-7450	Screw - Sem (Breather Mounting, pump cover)	5
192	77-7910	Nut - Hex Special	2
192A	77-9090	Screw - Set	1
219	77-7500	Gear - Governor	1
227	77-7370	Lever - Governor	1
230	77-7470	Washer - Thrust	1
238	77-7800	Cap - Valve	2
305	77-8310	Screw - Hex. Head	2
307	77-7420	Screw - Sem (Breather Cover)	4
337	77-7330	Plug - Spark	1
523	77-7260	Dipstick - Oil	1
*524	77-7270	Seal - Intake Elbow	1
525	77-7290	Tube - Oil Filler	1
562	77-7380	Bolt - Governor Lever	1
572	77-7400	Baffle - Cylinder	1
592	77-7390	Nut - Hex.	1
615	77-7480	Fastener	1
616	77-7460	Crank - Governor	1
635	77-7340	Elbow - Spark Plug	1
718	77-7600	Dowel - Sleeve	2
741	77-7530	Gear - Timing	1
*842	77-7300	Seal - O Ring	1
*868	77-7890	Seal Assy. - Valve	1
*868A	77-7900	Gasket - Valve	1
*883	77-7760	Gasket - Exhaust	1
979	77-7650	Cover - Oil Pump	1
*1022	77-7320	Gasket - Rocker Cover	1
1023	77-7060	Cover - Valve	1
1024	77-7640	Pump - Oil	1
1026	77-7620	Rod - Push	2
1029	77-7790	Arm - VLV Rocker	2
1034	77-7770	Guide - Push Rod	1

*Included in Gasket Set
†Included in Carburetor Overhaul Kit

ENGINE GTS-150 77-9130

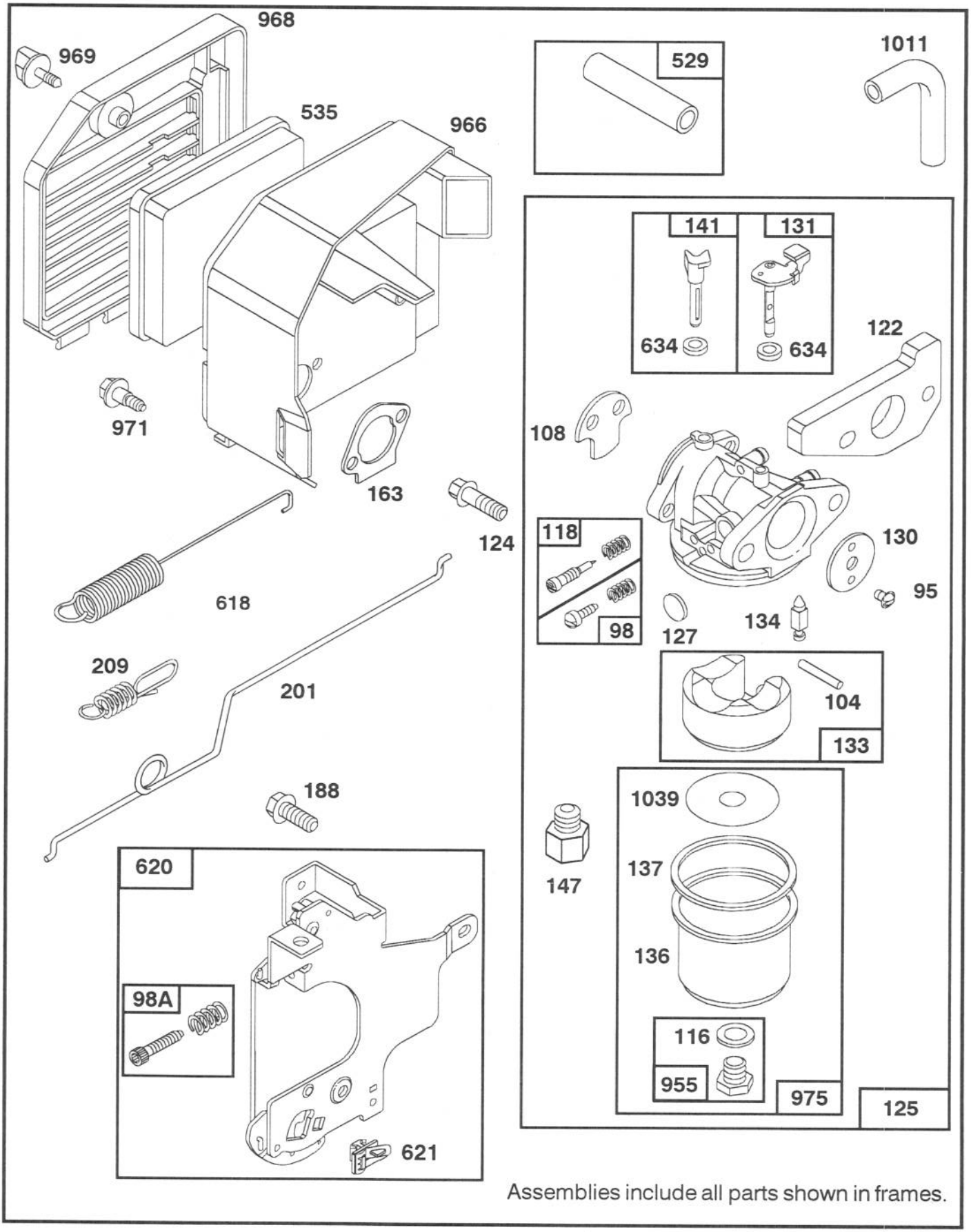

Assemblies include all parts shown in frames.

ENGINE GTS-150 77-9130

Ref. No.	Part No.	Description	No. Used
95	77-8090	Screw – Round Head	1
98	77-8240	Screw – Idle Adj.	1
98A	77-8020	Screw Assy – Speed Adj.	1
†104	77-8180	Pin – Float Hinge	1
108	77-8070	Valve – Choke	1
†116	77-8210	Washer – Fuel Bowl	1
†118	77-8230	Valve & Kit – Needle	1
†122	77-7820	Adapter Assy.	1
124	77-7970	Screw – Hex Head (Carburetor Mounting)	2
125	77-8050	Carburetor Assy.	1
†127	77-8100	Plug – Welch	1
130	77-8080	Valve – Throttle	1
131	77-8160	Shaft – Throttle	1
133	77-8170	Float – Carburetor	1
†134	77-8110	Valve – Float (Includes Seat)	1
136	77-7240	Bowl – Fuel	1
†137	77-8200	Gasket – Fuel Bowl	1
141	77-8130	Shaft – Choke	1
147	77-8120	Adapter – Jet Note: For High Altitude Jet, Order Part No. 77-9000	1
*163	77-7960	Gasket – Air Cleaner	1
188	77-7450	Screw – Hex. Head (connecting bracket)	2
201	77-7980	Link – Governor	1
209	77-7990	Spring – Governor	1
529	77-8030	Tube – Breather	1
535	77-7950	Element – Filter Note: 77-9010 – Element Paper (Optional)	1
618	77-8140	Spring – Return	1
620	77-8000	Bracket – Carburetor	1
621	77-8010	Switch – Stop	1
†634	77-8150	Washer – Seal	2
955	77-8220	Screw – Hex. Head	1
966	77-7940	Base Air Cleaner	1
968	77-7040	Cover – Air Cover	1
969	77-7920	Screw – Air Cleaner	1
971	77-7930	Screw – Air Cleaner	3
975	77-8190	Bowl Assy. – Carburetor	1
1011	77-8040	Tube – Vent	1
†1039	77-7250	Limiter – Float	1

*Included in Gasket Set
†Included in Carburetor Overhaul Kit

ENGINE GTS-150 77-9130

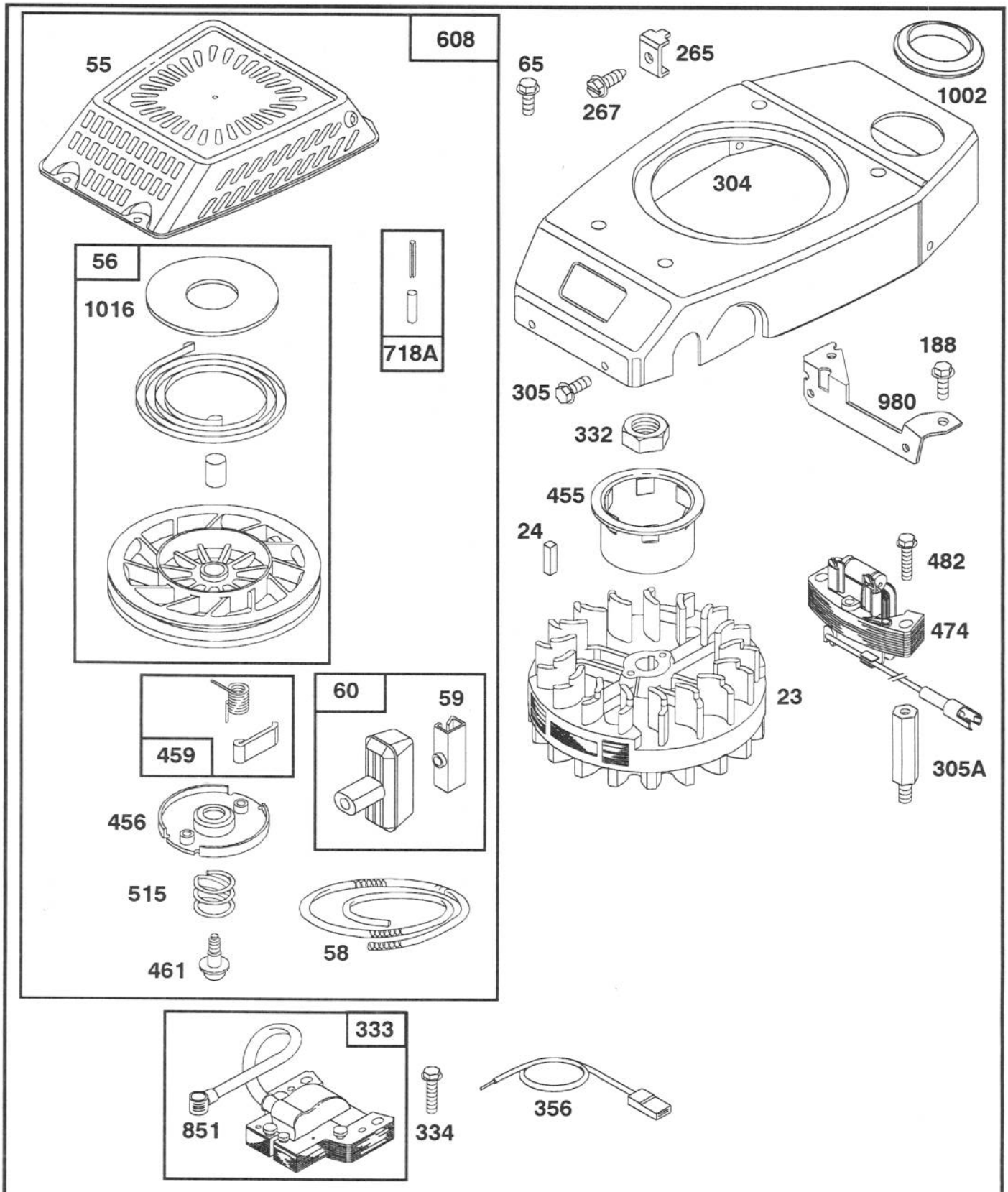

Assemblies include all parts shown in frames.

ENGINE GTS-150 77-9130

Ref. No.	Part No.	Description	No. Used
23	77-8320	Flywheel - Magneto	1
24	77-8340	Key - Flywheel	1
55	77-8460	Housing - Rewind Starter	1
56	77-8560	Pulley - Rewind Starter	1
58	77-8480	Spool - Starter Rope (Cut To Suit)	1
59	77-7210	Insert - Starter Grip	1
60	77-8510	Grip - Starter Rope	1
65	77-8300	Screw - Hex. Head	4
188	77-7450	Screw - Hex. Head (Blower bracket)	2
265	77-8280	Clamp - Casing	1
267	77-8290	Screw - Hex Head	1
304	77-8250	Housing - Blower	1
305	77-8310	Screw - Hex. Head (Blower Housing)	4
305A	77-8390	Stud - Mtg.	2

Ref. No.	Part No.	Description	No. Used
332	77-8360	Nut - Hexagon	1
333	77-8420	Armature - Magneto	1
334	77-8440	Screw - Sem	2
356	77-8400	Wire - Ground	1
455	77-8350	Cup - Starter	1
456	77-8470	Retainer - Spring	1
459	77-8530	Pawl & spring - Ratchet	2
461	77-8490	Screw - Rewind Starter	1
474	77-8370	Alternator	1
482	77-8380	Screw - Sem	2
515	77-8500	Spring - Retainer	1
608	77-8450	Starter Assy. - Rewind	1
718A	77-8550	Dowel - Sleeve	1
851	77-8430	Terminal - Spark Plug	1
980	77-7140	Bracket - Blower Housing	1
1002	77-7180	Grommet	1
1016	77-8570	Cover - Pulley	1

ENGINE GTS–150 77–9130

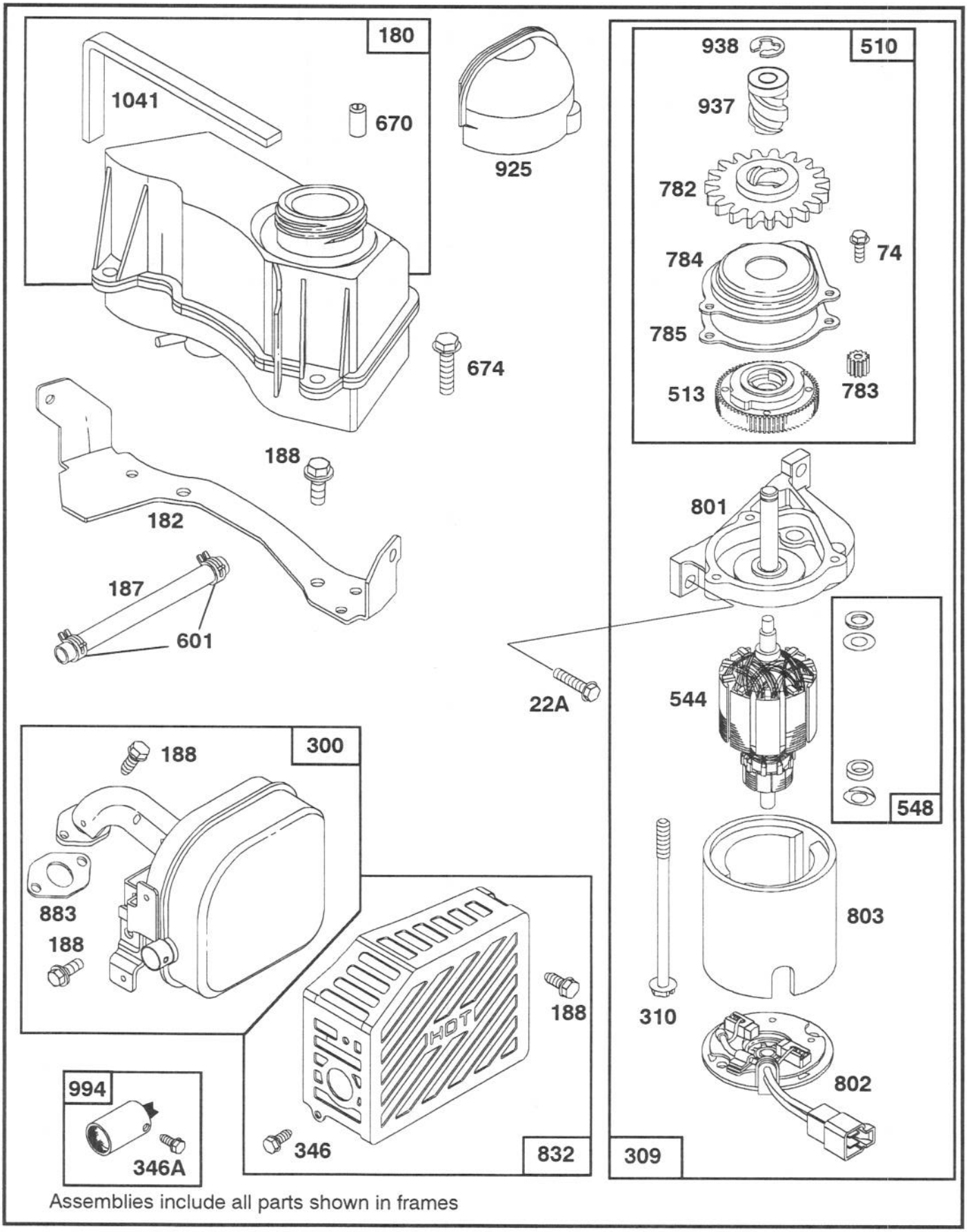

Assemblies include all parts shown in frames

ENGINE GTS-150 77-9130

Ref. No.	Part No.	Description	No. Used
22A	77-8720	Screw - Carb. Mtg.	2
74	77-8800	Screw - Sem	3
180	77-8580	Tank Assy. - Fuel	1
182	77-7170	Bracket - Fuel Tank	1
187	77-8620	Hose - Fuel (Cut To Suit)	1
188	77-7450	Screw - Hex. Head (Muffler guard, muffler manifold to head, connecting bracket, Tk bracket)	7
300	77-8640	Muffler - Exhaust	1
309	77-8670	Motor Starter	1
310	77-8710	Bolt - Thru	2
346	77-8650	Screw - Self Tap (Muffler Guard)	2
346A	77-9050	Screw - Arrester Mtg.	1
510	77-8910	Drive - Starter	1
513	77-8770	Clutch - Starter	1
544	77-8730	Armature Starter	1
548	77-8740	Washer - Starter	1
601	77-8630	Clamp - CL Pipe	2
670	77-9030	Spacer - Fuel Tank (Incl. 2)	1
674	77-8600	Screw - Tank Mtg.	2
782	77-8810	Gear - Starter	1
783	77-8760	Gear - Pinion	1
784	77-8780	Cover - Gear	1
785	77-8790	Gasket - Gear Cover	1
801	77-8680	Cap - Drive	1
802	77-8690	Cap - End	1
803	77-8700	Housing - Starter	1
832	77-8660	Guard - Muffler	1
*883	77-7760	Gasket - Exhaust	1
925	77-7200	Cover - Starter	1
937	77-8820	Drive - Starter	1
938	77-8830	Retainer - Lock	1
994	77-9040	Arrester - Spark	1
*1041	77-8590	Seal - Foam	1

*Included in Gasket Set

ENGINE GTS-150 77-9130

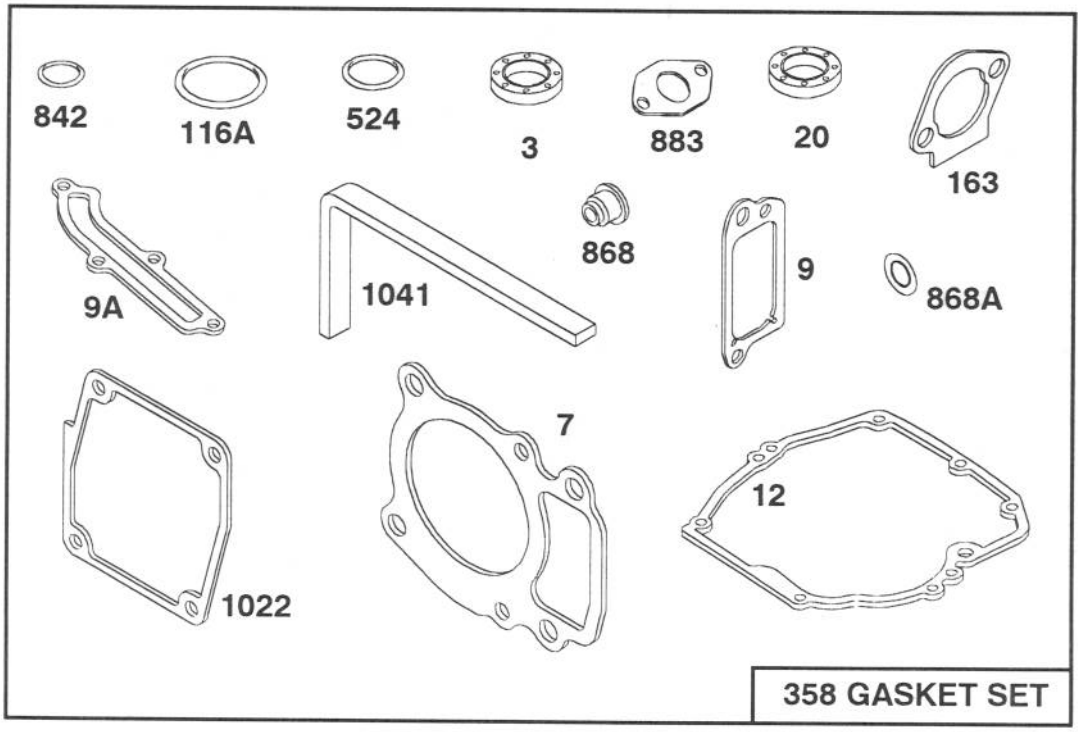

358 GASKET SET

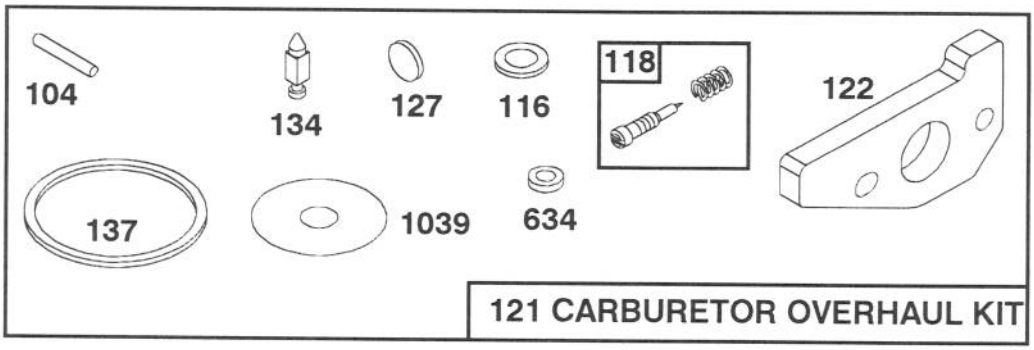

121 CARBURETOR OVERHAUL KIT

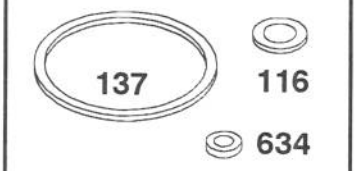

977 CARBURETOR GASKET SET

Assemblies include all parts shown in frames.

ENGINE GTS-150 77-9130

Ref. No.	Part No.	Description	No. Used
3	77-9060	Seal - Oil	1
7	77-7740	Gasket - Cylinder Head	1
9	77-7440	Gasket - Valve Cover	1
9A	77-7410	Gasket - Breather	1
12	77-7550	Gasket - Engine Base	1
20	77-7570	Seal - Oil	1
104	77-8180	Pin - Float Hinge	1
116	77-8210	Washer - Fuel Bowl	1
116A	77-7660	Seal - O Ring	1
118	77-8230	Valve & Kit - Needle	1
121	77-8920	Overhaul Kit - Carburetor	1
122	77-7820	Adapter Assy.	1
127	77-8100	Plug - Welch	1
134	77-8110	Valve - Float (Includes Seat)	1
137	77-8200	Gasket - Fuel Bowl	1

Ref. No.	Part No.	Description	No. Used
163	77-7960	Gasket - Air Cleaner	1
358	77-8900	Gasket Set	1
524	77-7270	Seal - Intake Elbow	1
634	77-8150	Washer - Seal	2
842	77-7300	Seal - O Ring	1
868	77-7890	Seal Assy. - Valve	1
868A	77-7900	Gasket - Valve	1
883	77-7760	Gasket - Exhaust	1
977	77-8930	Gasket Set - Carburetor	1
1022	77-7320	Gasket - Rocker Cover	1
1039	77-7250	Limiter - Float	1
1041	77-8590	Seal - Foam	1
	77-9020	Short Block	1
	77-8990	GTS150 Key/BBC Engine	1
	77-9000	High Altitude Jet	1

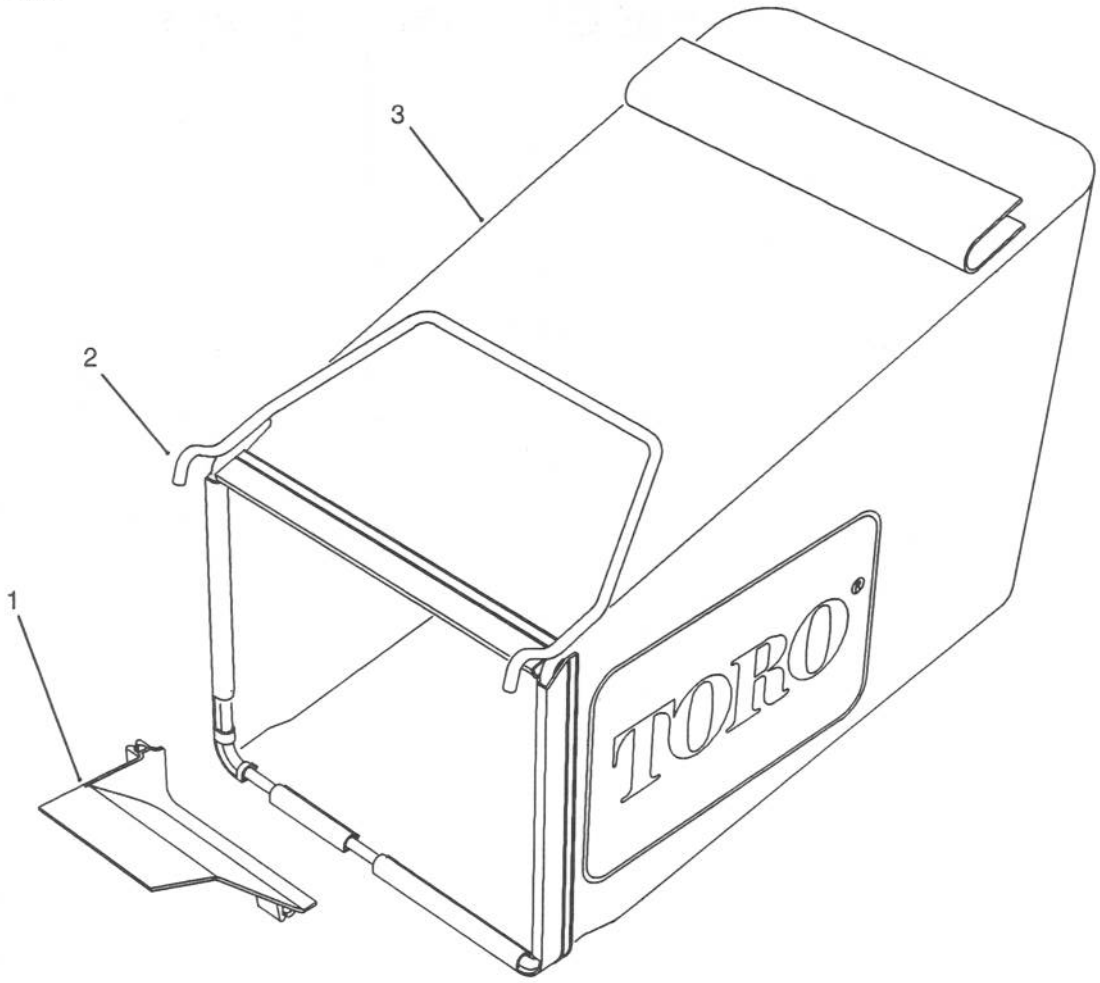

C–0659

GRASS BAG ASSEMBLY

Ref. No.	Part No.	Description	No. Used
1	71–3750	Ramp – Grass Bag	1
2	71–9060	Frame – Grass Bag	1

Ref. No.	Part No.	Description	No. Used
3	71–9050	Bag – Grass	1

AL-924541

Litho in U.S.A.