FORM NO. 3315–280

TORO®

MODEL NO. 03420–20232 & UP

PARTS CATALOG

REELMASTER® 216–D 2wd
TRACTION UNIT WITH ACCESSORIES

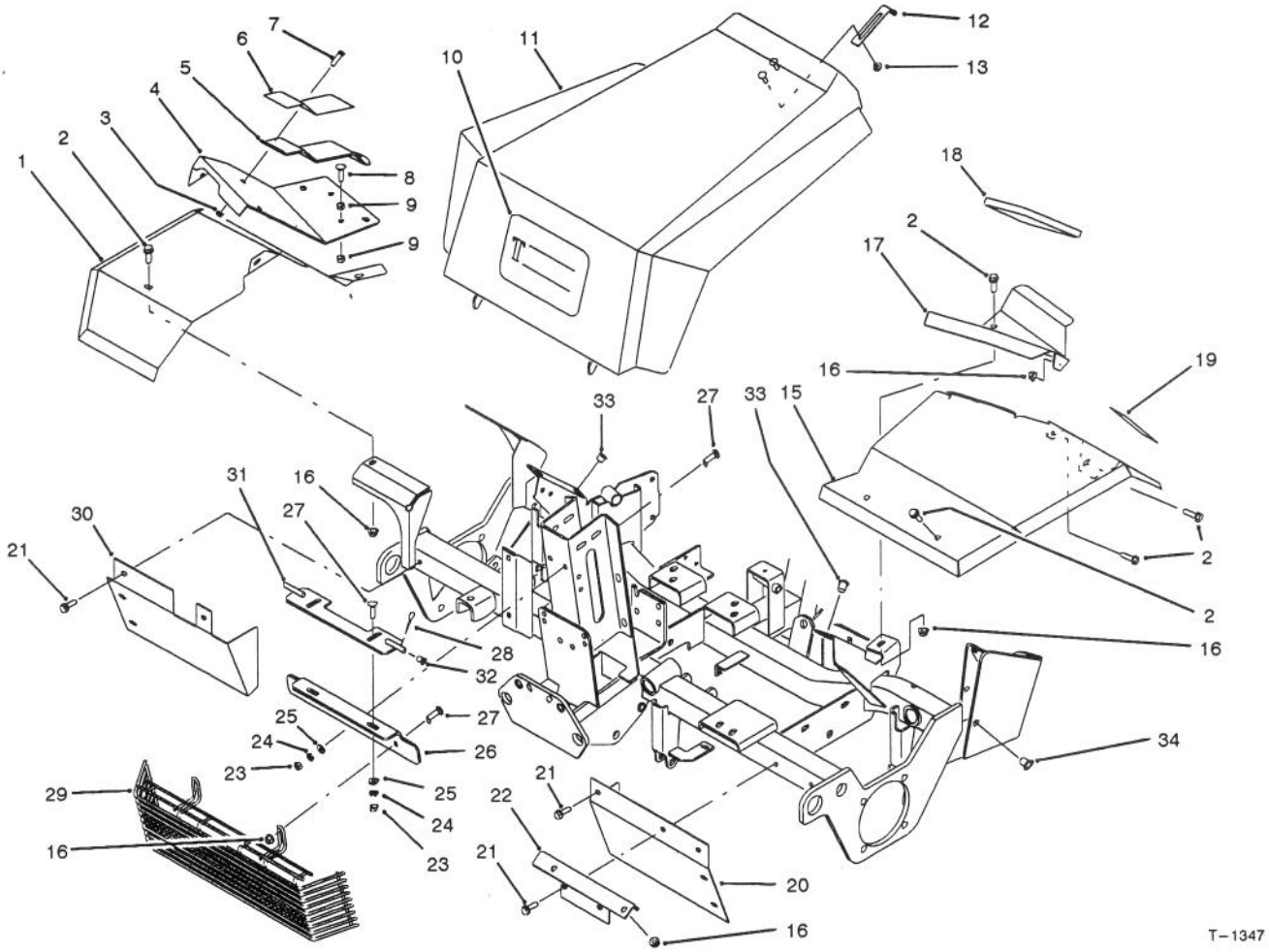

HOOD & GRILLE ASSEMBLY

Ref. No.	Part No.	Description	No. Used
1	83–9720	Fender – R.H.	1
2	3234–5	Screw – Hex. Washer Hd.	14
3	32128–33	Nut – Flange Lock	2
4	83–9740	Footrest – R.H.	1
5	76–2200	Footrest – Traction	1
6	76–2260	Pad – Footrest Traction	1
7	3229–1	Screw – Carriage	2
8	3230–27	Screw – Carriage	1
9	3218–2	Nut – Hex.	2
10	62–7400	Decal – TORO	1
11	83–7950	Hood	1
12	83–9970	Latch – Hood	1
13	32128–14	Nut – Flange Lock	2
15	83–9700	Fender – L.H.	1
16	32128–44	Nut – Flange Lock	13
17	83–9710	Footrest – L.H.	1
18	83–9840	Pad – Footrest L.H.	1

Ref. No.	Part No.	Description	No. Used
‡19	84–1650	Decal – Brake	1
20	83–9800	Shield – Grass Front L.H.	1
21	32104–82	Screw – Hex. Washer Hd.	5
22	83–8510	Bracket – Fender L.H.	1
23	3217–6	Nut – Hex.	4
24	3253–4	Washer – Lock	4
25	3256–23	Washer – Flat	4
26	85–4870	Support – Hinge	1
27	3230–23	Screw – Carriage	6
28	3290–467	Pin – Cotter Hair	2
29	83–8850	Grille – Front	1
30	83–8860	Shield – Grass Front R.H.	1
31	85–4890	Hinge – Hood	1
32	256–320	Bushing	2
33	32148–7	Insert – Threaded	3
34	32148–8	Insert – Threaded	1

‡For different language versions of this part, see International Decal Cross Reference.

TPS

© The TORO Company –1992

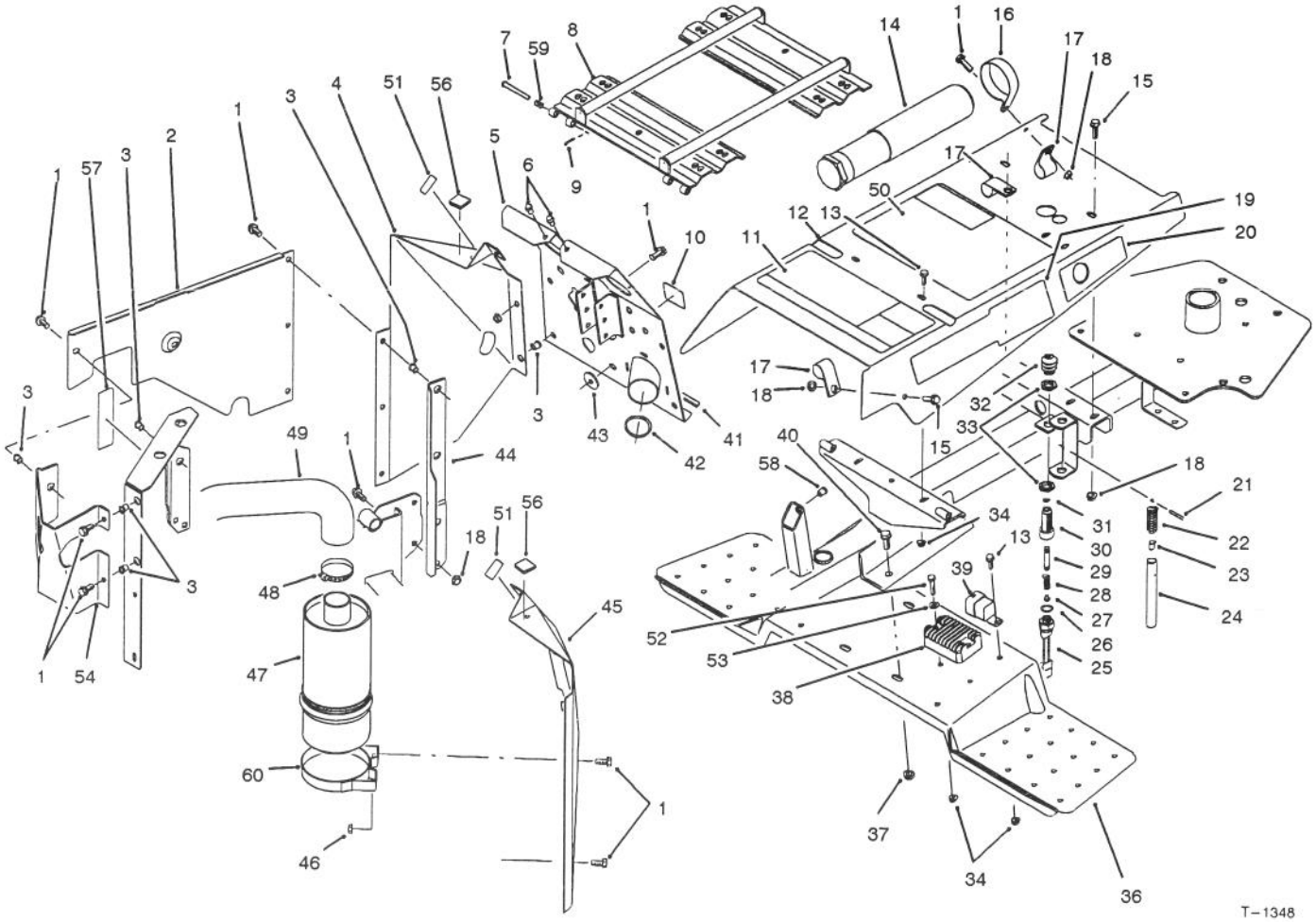

SKIRT ASSEMBLY

Ref. No.	Part No.	Description	No. Used
1	3234–5	Screw – Hex. Flange Hd.	24
2	83–8230	Panel – Right Front	1
3	32148–7	Insert – Threaded	8
4	83–8120	Panel – Right Rear	1
5	83–8190	Panel – Control	1
6	237–37	Bumper – Rubber	2
7	283–49	Pin – Clevis	2
8	76–2670	Plate – Seat Mounting	1
9	3272–4	Pin – Cotter	2
‡10	83–9150	Decal – Starting Fluid	1
‡11	83–9550	Decal – Warning	1
12	83–8880	Panel – Skirt	1
13	3234–4	Screw – Hex. Flange Hd.	3
14	74–0720	Tube – Manual	1
15	3234–36	Screw – Hex. Flange Hd.	3
16	2412–133	Clamp – R	2
17	2412–39	Clamp – R	3
18	32128–44	Nut – Flange Lock	10
19	83–8890	Decal – Reelmaster 216–D	2
21	32121–6	Pin – Roll	1
22	37–9590	Spring – Compression	1
23	28–6180	Pin	1
24	27–9870	Pin – Seat	1
25	72–4320	Switch – Seat	1
26	237–30	Seal – O–Ring	1
27	43–8610	Guide – Spring	1

Ref. No.	Part No.	Description	No. Used
28	43–8600	Spring – Compression	1
29	43–8860	Plunger – Switch	1
30	43–8620	Guide – Pin	1
31	237–7	Seal – O–Ring	1
32	43–8870	Boot – Switch	1
33	218–461	Nut – Hex.	2
34	32128–33	Nut – Flange Lock	5
36	83–9730	Step – Foot	1
37	32128–43	Nut – Flange Lock	4
†38	185516060	Regulator – Voltage	1
39	63–7590	Relay	1
40	3234–11	Screw – Hex. Flange Hd.	4
41	76–6471	Trim – Control Panel Bottom	1
42	237–71	Seal – O–Ring	1
43	62–7170	Spacer	1
44	83–9170	Right Channel Assembly (Incl. Ref. #3)	1
45	83–8110	Panel – Left	1
46	32128–20	Nut – Flange Lock	4
47	85–4910	Air Cleaner Assembly	1
48	2412–92	Clamp – Hose	1
49	83–8550	Hose – Air Cleaner	1
‡50	83–8900	Decal – Service Information	1
51	85–5180	Trim	2
52	321–8	Screw – Cap Hex. Hd.	2
53	3256–22	Washer – Flat	2

†Obtian from your Local Perkins Dealer.
‡For different language versions of this part, see International Decal Cross Reference.

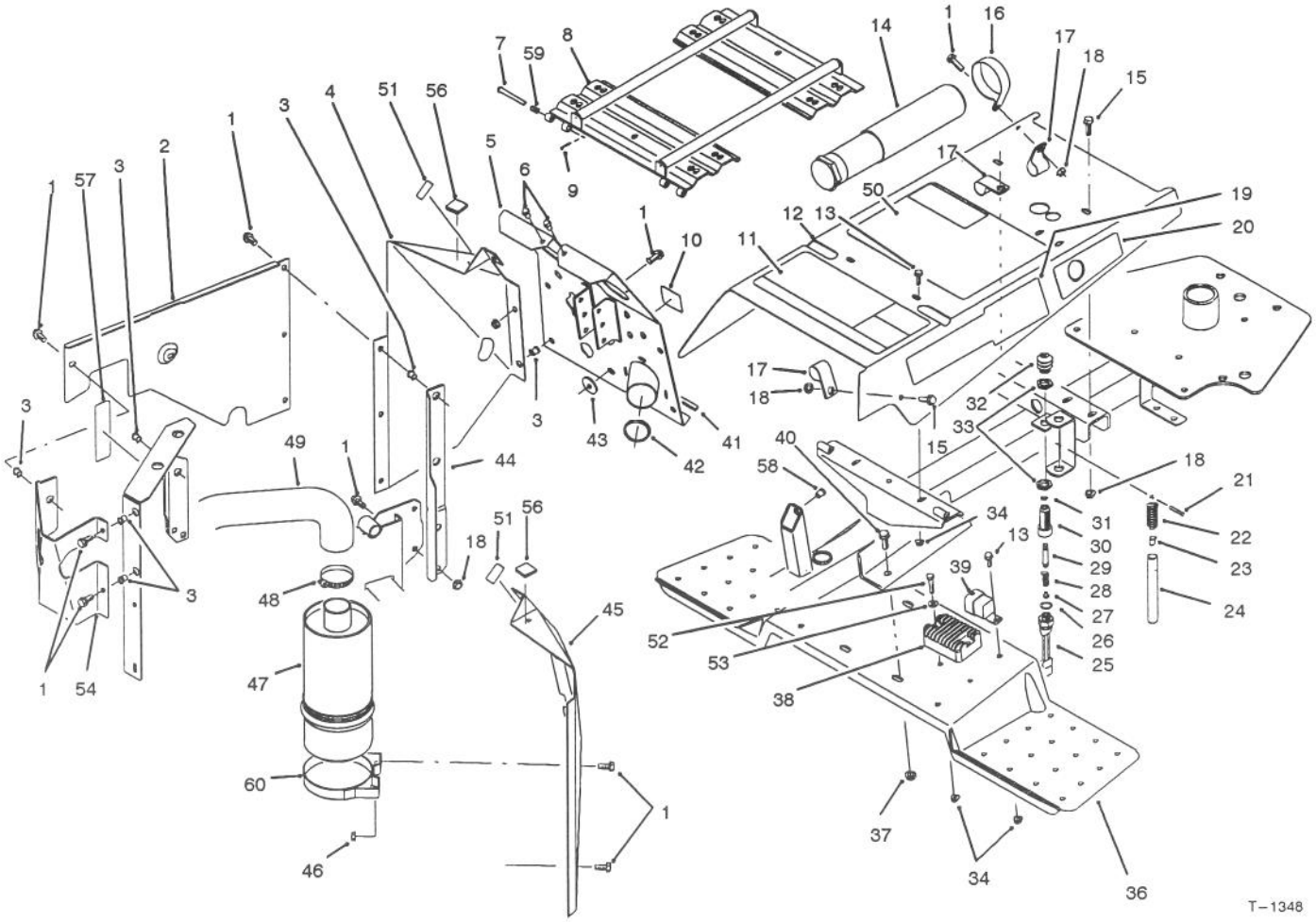

SKIRT ASSEMBLY (Continued)

Ref. No.	Part No.	Description	No. Used
54	85–5010	Bracket – Right Front	1
56	85–5140	Foam – Hood	2
57	67–5360	Decal – Danger	1
58	32148–8	Insert – Threaded	1
59	80–4130	Bushing	4

Ref. No.	Part No.	Description	No. Used
60	33–1350	Clamp Assembly (Incl. Ref. #61 & 62)	2
*61	3258–19	Screw – Round Hd.	2
*62	32107–11	Nut – Square	2
*	43–9071	Seat Switch Assembly (Incl. Ref. #25–33)	1

*Not Illustrated

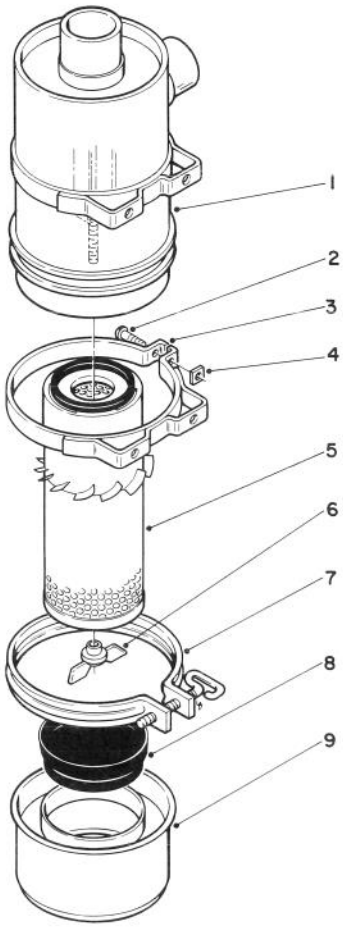

T-1349

AIR CLEANER ASSEMBLY

Ref. No.	Part No.	Description	No. Used
1		Body	1
2	3258-19	Screw - Round Hd.	2
3	33-1350	Band Assembly (Incl. Ref. #2 & 4)	2
4	32107-11	Nut - Square	2
5	33-1300	Element Assembly	1
6	33-1330	Nut Assembly	1
7	33-1340	Clamp Assembly	1
8	33-1310	Baffle	1
9	33-1320	Cup	1
*	85-4910	Air Cleaner (Complete) (Incl. Ref. #1 & 5-9)	1

*Not Illustrated

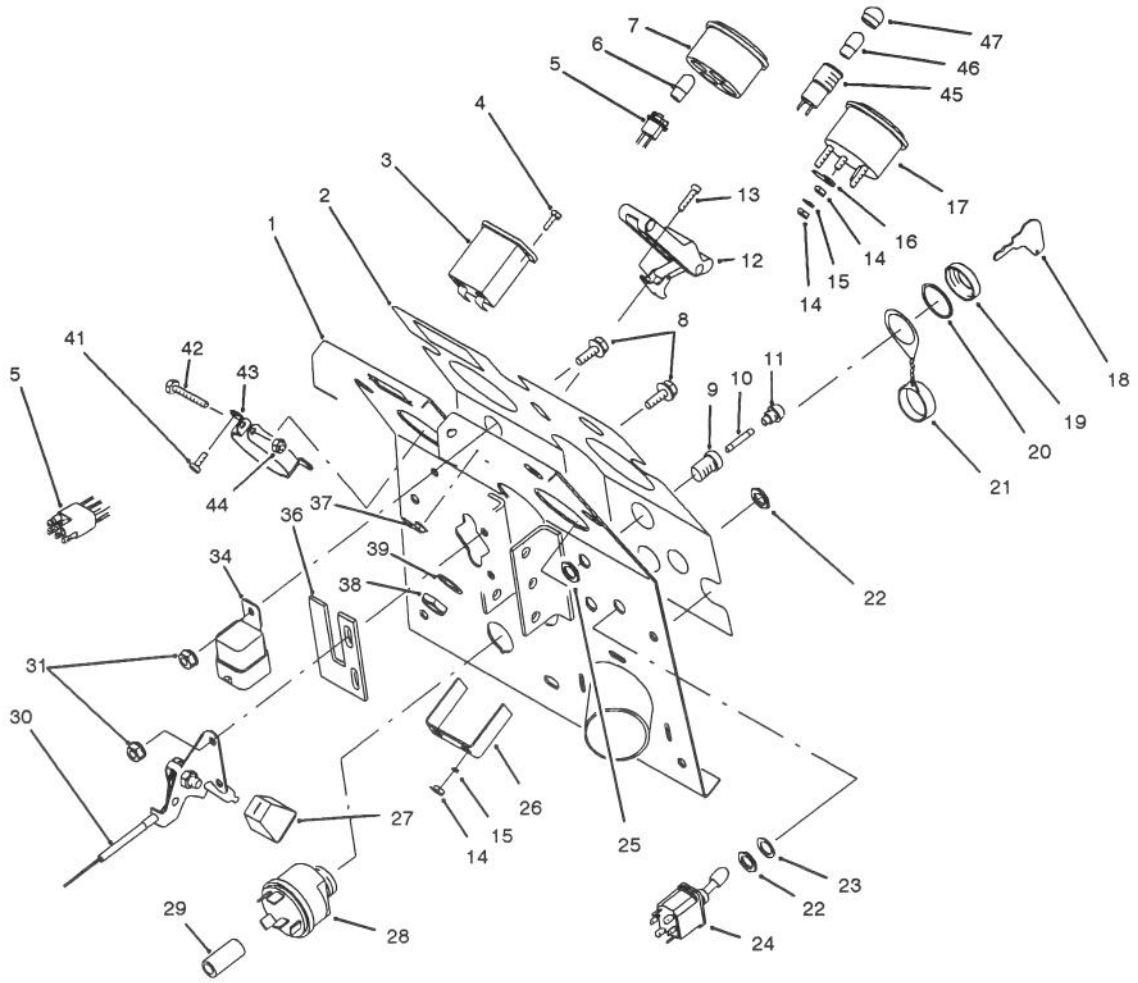

T–1350

INSTRUMENT PANEL ASSEMBLY

Ref. No.	Part No.	Description	No. Used
1	83–8190	Panel – Instrument	1
2	83–8180	Decal – Instrument Panel	1
3	75–6820	Hourmeter	1
4	32144–18	Screw – Hex. Hd.	2
5	75–4710	Harness – Warning Light	1
6	219–17	Bulb – Light	4
7	66–2960	Cluster – Warning	1
8	3234–4	Screw – Hex. Washer Hd.	3
9	218–489	Fuse Holder Assembly (Incl. Ref. #11 & 25)	2
10	218–469	Fuse – 15 Amp.	2
11		Cap – Fuse Holder	2
12	80–6980	Latch – Hood	1
13	3274–90	Screw – Hex. Socket Hd.	2
14	3219–14	Nut – Hex.	6
15	3253–2	Washer – Lock	5
16	3256–14	Washer – Flat	2
17	63–7430	Temperature Gauge Assy. (Incl. Ref. #14–16 & 26)	1
†18	385210060	Key – Ignition	2
†19		Nut – Retaining	1
†20	390190030	Seal – Switch	1
†21	385800010	Cover – Switch	1
22	218–500	Nut – Hex.	2
23	3254–20	Washer – Lock	1

Ref. No.	Part No.	Description	No. Used
24	85–4980	Switch Assembly (Incl. Ref. #22–23)	1
25		Nut – Hex.	2
26		Clamp – Gauge	1
27		Knob – Throttle	1
†28	385201160	Ignition Switch Assembly (Incl. Ref. #18 & 19)	1
29	80–7345	Hose	
30	83–8280	Throttle Assembly (Incl. Ref. #27)	1
31	32128–33	Nut – Flange Lock	3
34	63–7590	Relay	1
36	85–5000	Plate – Throttle	1
37	32149–9	Nut – Flange Lock	2
38		Nut – Hex.	1
39		Washer – Flat	1
41	32144–39	Screw – Pan Hd.	2
42	32105–1	Screw – Hex. Hd.	1
43	69–4780	Clamp – Light Cluster	1
44	3296–2	Nut – Lock	1
45	44–2212	Light Assembly (Incl. Ref. #38–39 & 46–47)	1
46	219–18	Bulb – Light	1
47	218–562	Lens – Light	1

†Obtain from your local Perkins Dealer.

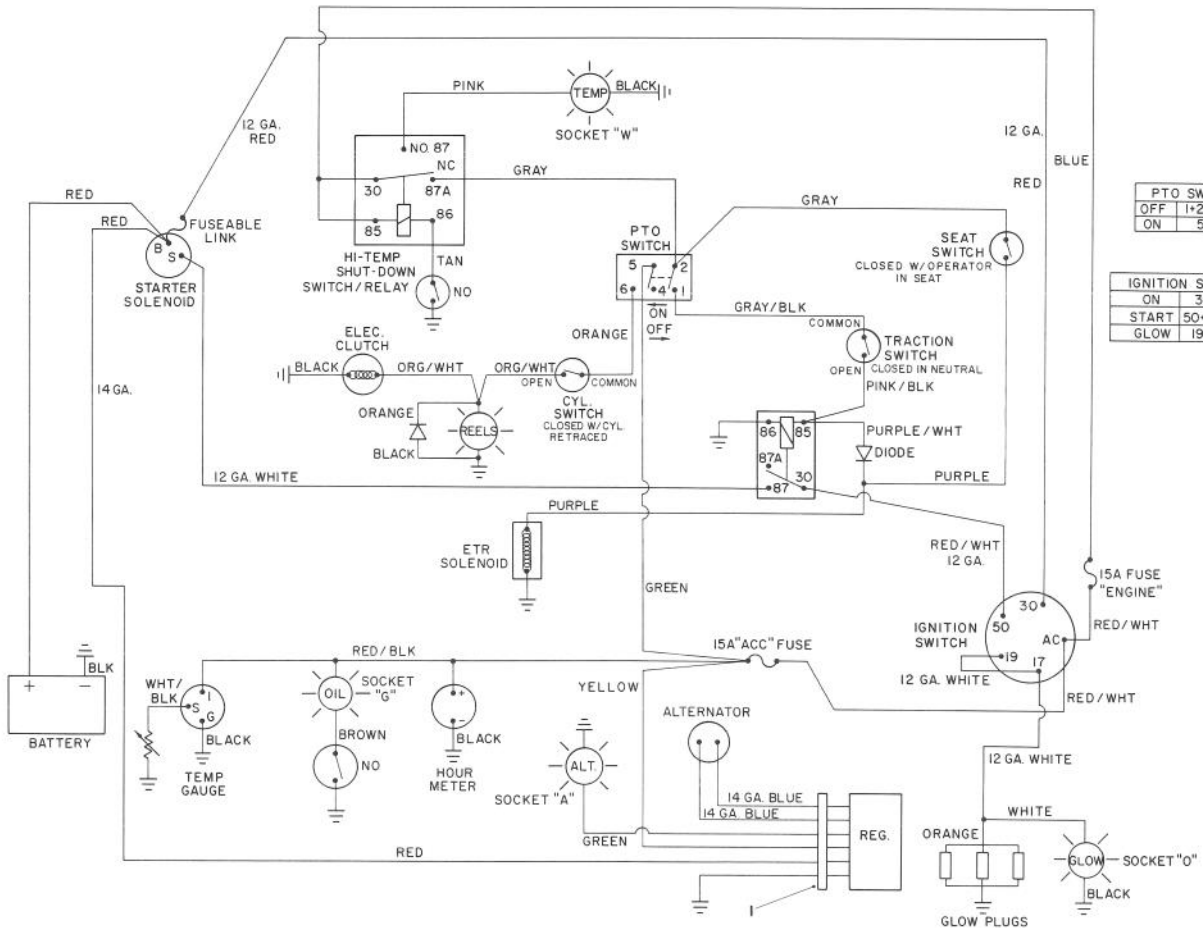

T–1409

ELECTRICAL SCHEMATIC

Ref. No.	Part No.	Description	No. Used
1	83–8920	Harness – Wire	1

Ref. No.	Part No.	Description	No. Used

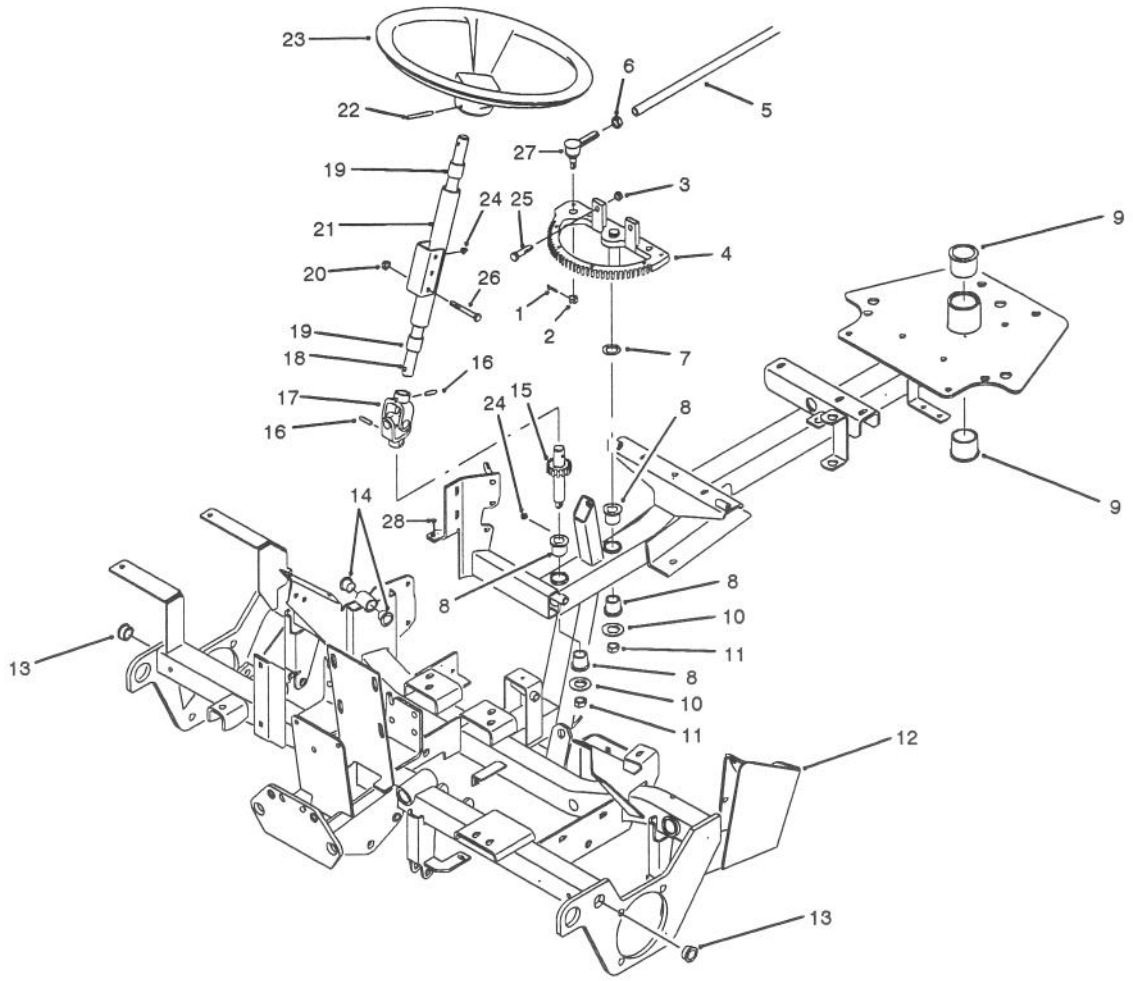

T–1351

FRAME ASSEMBLY

Ref. No.	Part No.	Description	No. Used
1	3272–6	Pin – Cotter	1
2	32136–4	Nut – Castle	1
3	3218–3	Nut – Jam	2
4	61–2040	Rack – Steering	1
5	61–2070	Rod – Steering	1
6	3220–5	Nut – Jam	1
7	3–6498	Washer – Thrust	A/R
8	256–117	Bushing – Flange	4
9	256–245	Bushing – Flange	2
10	3256–26	Washer – Flat	2
11	3296–28	Nut – Lock	2
12	83–7570	Frame Assembly (Incl. Ref. #8, 9, 13 & 14)	1
13	256–247	Bushing – Flange	2
14	256–287	Bushing – Flange	2
15	61–2010	Pinion – Steering	1

Ref. No.	Part No.	Description	No. Used
16	32121–15	Pin – Roll	2
17	61–3360	Joint – Universal	1
18	61–2080	Shaft – Steering	1
19	256–27	Bushing – Sleeve	2
20	3296–29	Nut – Flange Lock	1
21	61–2090	Steering Column Assembly (Incl. Ref. #19)	1
22	32121–10	Pin – Roll	1
23	76–1420	Wheel – Steering	1
24	302–5	Fitting – Grease	3
25	32141–84	Screw – Cap Hex. Hd.	2
26	322–12	Screw – Cap Hex. Hd.	1
27	21–0140	Rod End Assembly (Incl. Ref. #2)	1
28	32148–14	Insert – Threaded	1

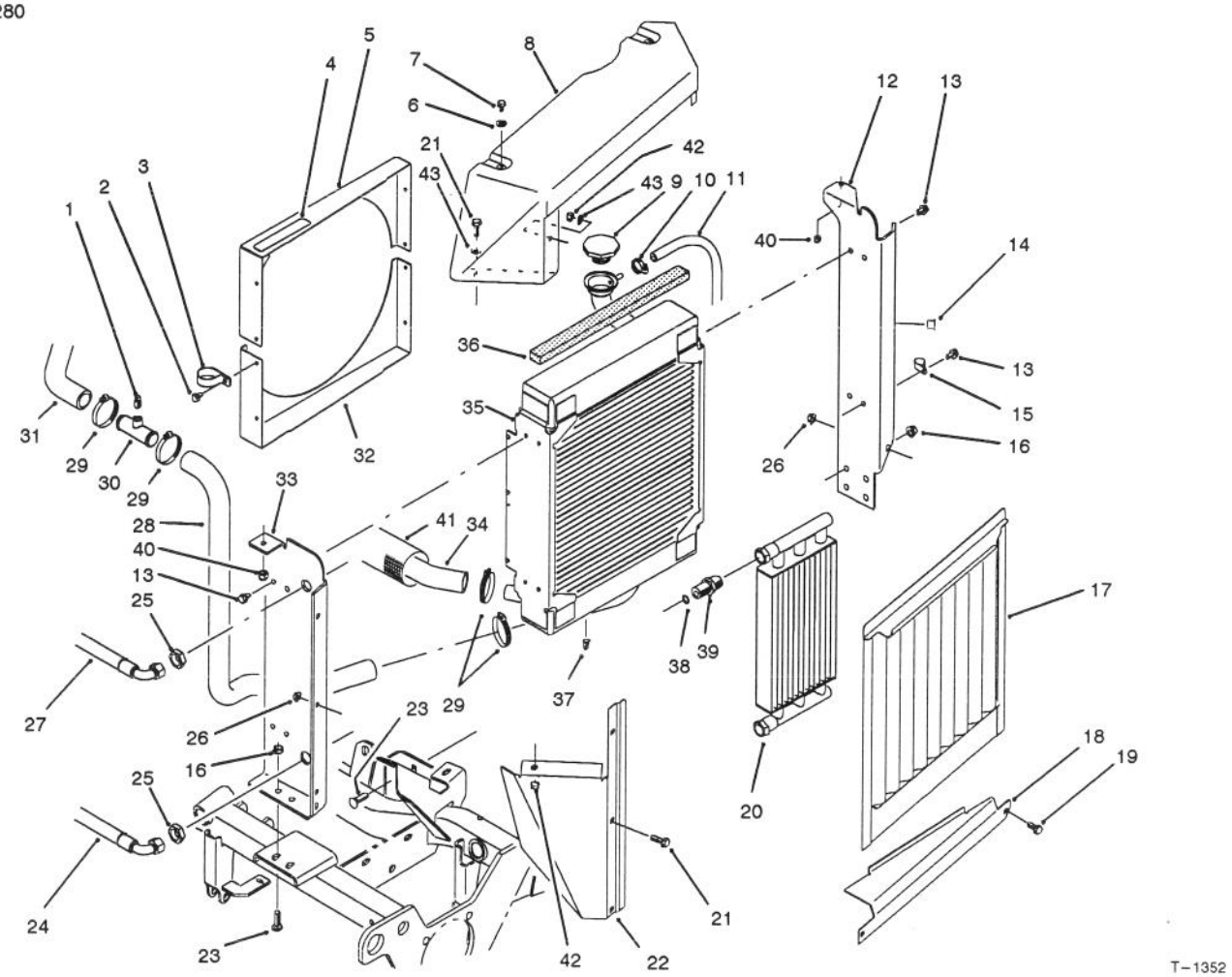

RADIATOR ASSEMBLY

Ref. No.	Part No.	Description	No. Used
1	281–7	Plug – Pipe	1
2	32104–116	Screw – Hex. Washer Hd.	8
3	2412–74	Clamp – R	1
‡4	77–3100	Decal – Warning	1
5	83–7840	Shroud – Fan Top	1
6	3256–22	Washer – Flat	2
7	3234–4	Screw – Cap Hex. Hd.	2
8	83–8040	Cover – Left	1
9	66–3240	Cap – Radiator	1
10	2412–108	Clamp – Hose	1
11	71–3382	Hose – Overflow	1
12	83–7980	Bracket – Radiator Rear	1
13	3234–28	Screw – Hex. Washer Hd.	8
14	32148–8	Insert – Threaded	3
15	2412–41	Clamp – R	1
16	32128–43	Nut – Flange Lock	6
17	83–8150	Screen – Radiator	1
18	83–8070	Bracket – Radiator Bottom	1
19	3234–5	Screw – Hex. Washer Hd.	2
20	24–0760	Cooler – Oil	1
21	3234–17	Screw – Hex. Washer Hd.	4
22	83–8210	Panel – Front Left	1
23	3231–22	Bolt – Carriage	6

Ref. No.	Part No.	Description	No. Used
24	85–5030	Hose – Hydraulic	1
25	340–127	Nut – Bulkhead	2
26	32128–44	Nut – Flange Lock	4
27	83–9670	Hose – Hydraulic	1
28	83–9060	Hose – Radiator	1
29	2412–34	Clamp – Hose	5
30	83–9080	Connector – Bleed	1
31	83–9070	Hose – Radiator	1
32	83–7850	Shroud – Fan Bottom	1
33	83–7990	Bracket – Radiator Front	1
34	83–9050	Hose – Radiator	1
35	83–7550	Radiator Assembly (Incl. Ref. #37)	1
36	83–9030	Foam – Top	1
37	281–1	Plug – Pipe	2
38	237–30	Seal – O–Ring	2
39	83–7970	Fitting – Hydraulic Bulkhead (Incl. Ref. #38)	2
40	3296–42	Nut – Lock	2
41	85–5170	Sleeve	1
42	3296–29	Nut – Lock	2
43	3256–23	Washer – Flat	2

‡For different language versions of this part, see International Decal Cross Reference.

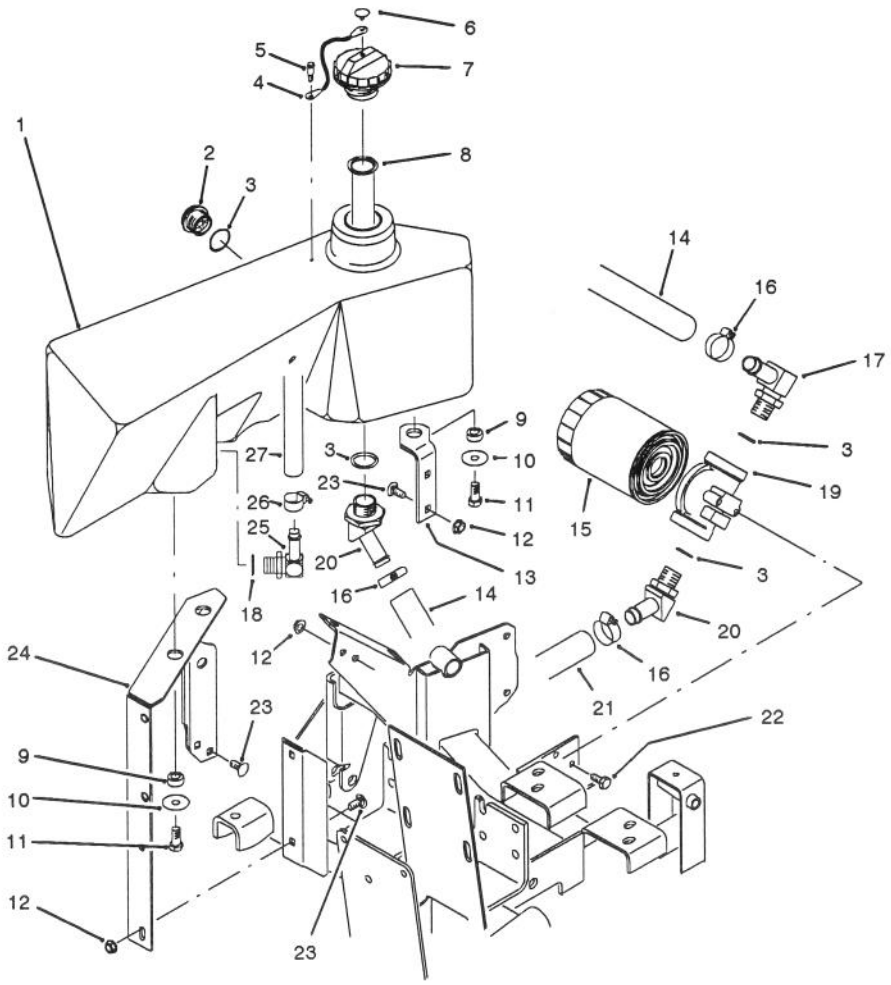

T–1353

HYDRAULIC RESERVOIR & FILTER ASSEMBLY

Ref. No.	Part No.	Description	No. Used
1	83–7720	Reservoir – Hydraulic	1
2	69–1170	Glass – Sight (Incl. Ref. #3)	1
3	237–81	Seal – O–Ring	4
4	75–0540	Teather – Cap	1
5	57–5420	Screw – Shoulder	1
6	2410–73	Retainer – Teather	1
7	70–8640	Cap – Hydraulic Reservoir (Incl Ref. #4 & 6)	1
8	61–2790	Screen – Filler	1
9	240–11	Grommet	3
10	63–8410	Washer – Flat	3
11	323–5	Screw – Cap Hex. Hd.	3
12	32128–44	Nut – Hex. Flange Hd.	6
13	83–9920	Bracket – Reservoir	1
14	83–9651	Hose – Hydraulic	1

Ref. No.	Part No.	Description	No. Used
15	54–0110	Element – Oil Filter	1
16	3212–34	Clamp – Hose	3
17	353–987	Fitting– Hydraulic 90° (Incl. Ref. #3)	1
18	237–79	Seal – O–Ring	1
19	68–8990	Head – Oil Filter	1
20	354–127	Fitting – Hydraulic 45° (Incl. Ref. #3)	2
21	83–9650	Hose – Hydraulic	1
22	3234–4	Screw – Hex. Washer Hd.	2
23	3230–23	Screw – Carriage	6
24	83–7780	Bracket – Support	1
25	354–120	Fitting – Hydraulic 90° (Incl. Ref. #18)	1
26	2412–36	Clamp – Hose	1
27	83–9670	Hose – Hydraulic	1

3315–280

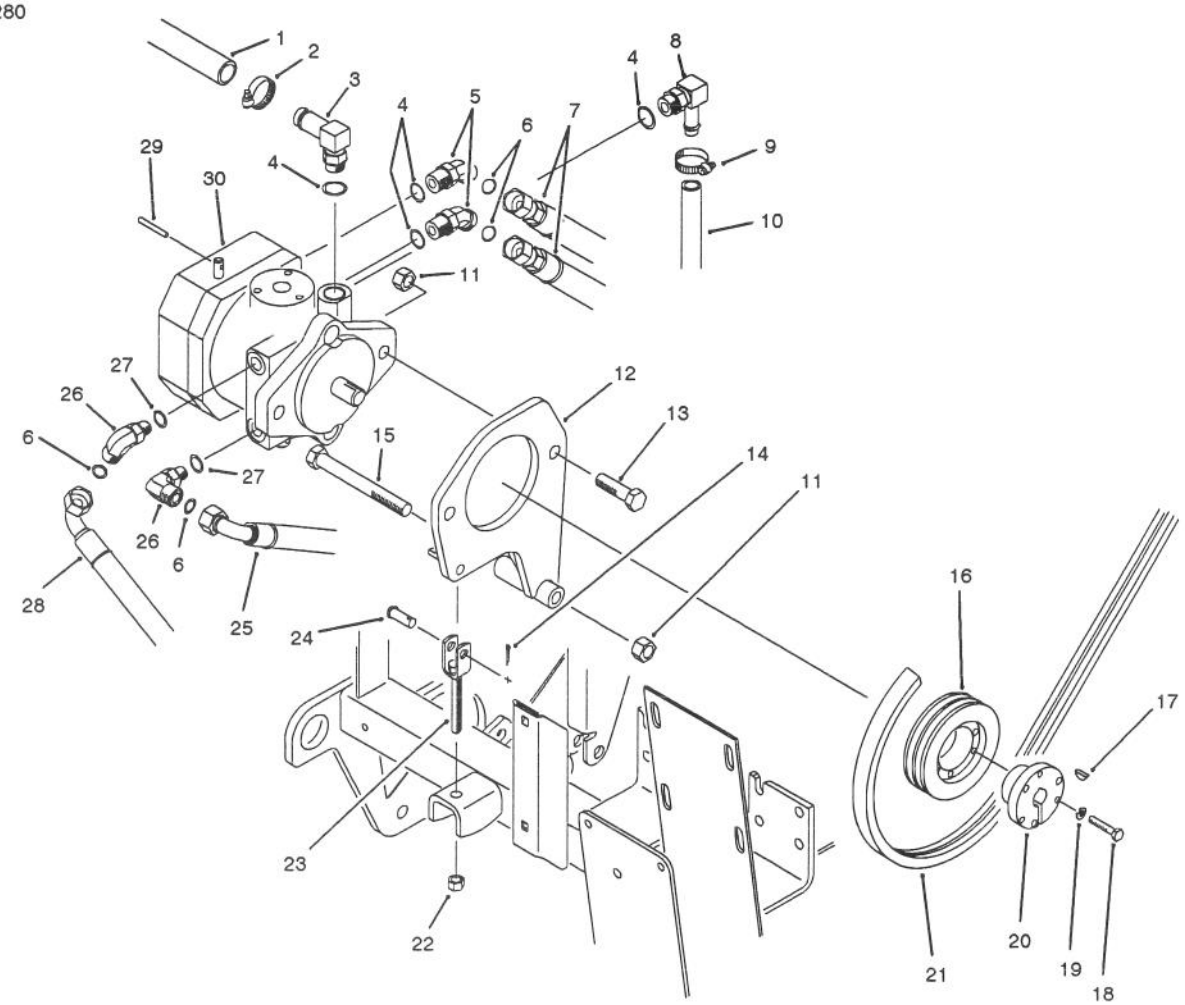

HYDRAULIC PUMP INSTALLATION ASSEMBLY

Ref. No.	Part No.	Description	No. Used
1	83–9650	Hose – Hydraulic	1
2	2412–34	Clamp – Hose	1
3	354–128	Fitting – Hydraulic 90° (Incl. Ref. #4)	1
4	237–79	Seal – O–Ring	4
5	340–101	Fitting – Hydraulic 45° (Incl. Ref. #4 & 6)	2
6	237–30	Seal – O–Ring	4
7	83–9600	Hose – Hydraulic	2
8	354–120	Fitting – Hydraulic 90° (Incl. Ref. #4)	1
9	2412–36	Clamp – Hose	1
10	85–5030	Hose – Hydraulic	1
11	3296–23	Nut – Lock	3
12	83–8320	Mount – Pump	1
13	325–7	Screw – Cap Hex. Hd.	2
14	3272–6	Pin – Cotter	1
15	325–18	Screw – Cap Hex. Hd.	1

Ref. No.	Part No.	Description	No. Used
16	85–4960	Pulley	1
17	3257–32	Key – Woodruff	1
18	321–13	Screw – Cap Hex. Hd.	3
19	3253–3	Washer – Lock	3
20	59–2150	Taper Lock Bushing Assy. (Incl. Ref. #18 & 19)	1
21	83–8540	Belt – Pump Drive	1
22	3296–6	Nut – Lock	1
23	83–9660	Clevis	1
24	283–2	Pin – Clevis	1
25	83–9640	Hose – Hydraulic	1
26	340–99	Fitting – Hydraulic 90° (Incl. Ref. #6 & 27)	2
27	237–42	Seal – O–Ring	2
28	83–9630	Hose – Hydraulic	1
29	32121–34	Pin – Dowel	1
30	85–4920	Hydraulic Pump Assembly (Incl. Ref. #17)	1

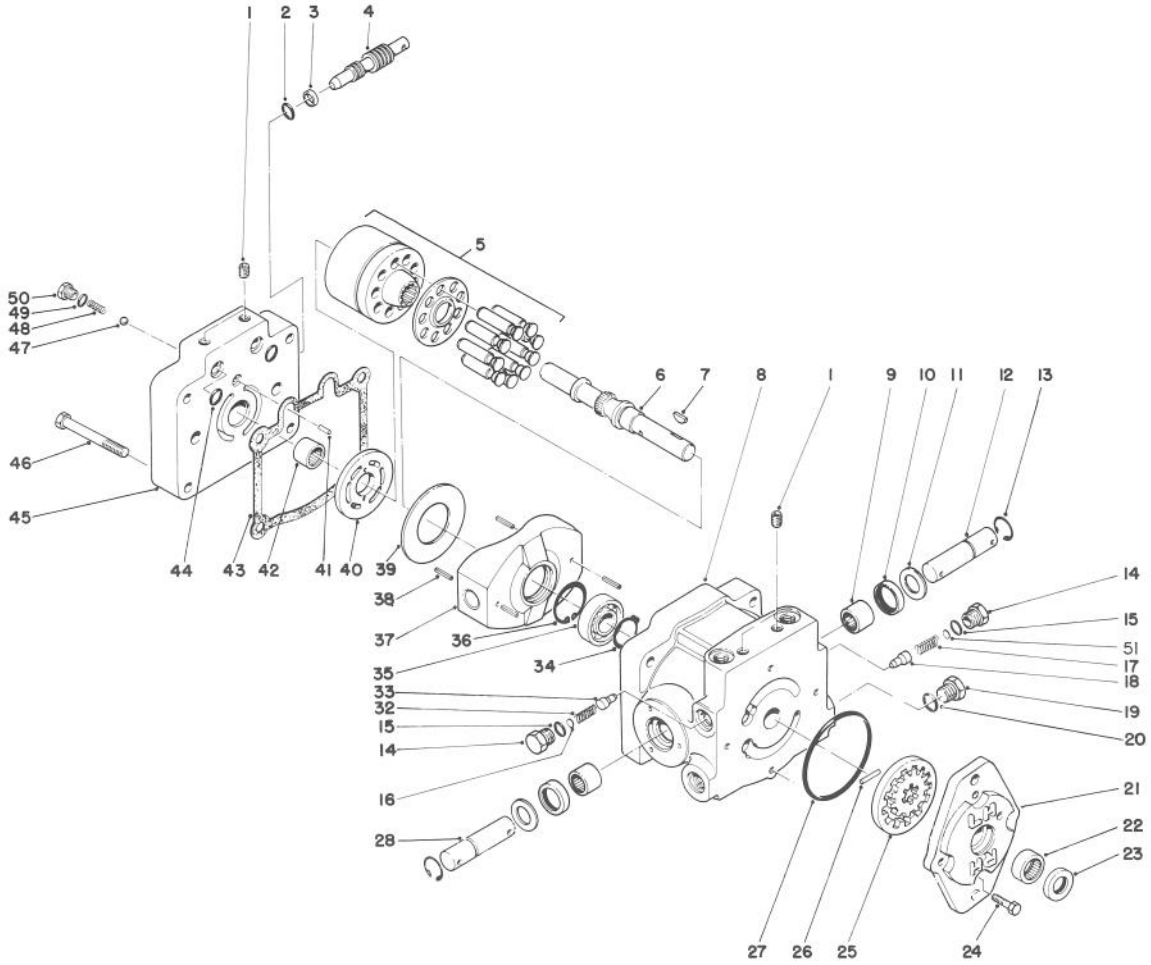

T-0245

HYDRAULIC PUMP ASSEMBLY NO. 85-4920

Ref. No.	Part No.	Description	No. Used
1	285-17	Plug - Pipe	6
2	237-22	O-Ring	1
3	25-2630	Ring	1
4	25-2620	Valve - By-Pass	1
5	48-1800	Cylinder Block Kit	1
6	67-8020	Shaft - Pump	1
7	3257-32	Key - Woodruff	1
8	85-4920	Hydraulic Pump Assembly (Complete)	1
9	252-82	Bearing - Needle	2
10	25-3210	Seal - Lip	2
11	25-2510	Washer	2
12	25-2580	Shaft - Trunion	1
13	32151-46	Ring - Retaining	2
14	25-2460	Plug	2
15	237-86	O-Ring	2
16	25-2470	Kit - Shim Pack	2
17	25-2570	Spring - Relief Valve	1
18	25-2560	Cone - Relief Valve	1
19	67-8030	Plug Assembly (Incl. Ref. #20)	1
20	67-8040	O-Ring	1
21	25-2690	Housing - Charge Pump	1
22	67-8050	Bearing - Needle	1
23	67-8060	Seal - Lip	1
24	322-4	Screw - Cap Hex. Hd.	4

Ref. No.	Part No.	Description	No. Used
25	25-2680	Gerotor Assembly	1
26	25-2530	Pin - Straight	1
27	237-95	O-Ring	1
28	49-8480	Shaft - Trunion	1
32	25-2480	Spring - Charge Relief	1
33	28-3420	Cone - Charge Relief	1
34	32120-15	Ring - Retaining	1
35	251-8	Bearing - Ball	1
36	32120-11	Ring - Retaining	1
37	25-2450	Swash/Plate	1
38	32121-91	Pin - Coiled Spring	3
39	25-2380	Plate - Thrust	1
40	25-2390	Plate - Valve	1
41	25-2430	Pin - Straight	1
42	67-8080	Bearing - Needle	1
43	25-2400	Gasket	1
44	62-4290	O-Ring	2
45	67-8090	Cap - Pump End	1
46	323-11	Screw - Cap Hex. Hd.	4
47	25-2490	Ball - Check Valve	2
48	25-2640	Spring - Check Valve	2
50	25-2650	Plug - Check Valve	2
*	25-3180	Kit - Check Valve (Incl. Ref. #47-50)	1
*	49-8520	Kit - Implement Relief (Incl. Ref. #14-18)	1

*Not Illustrated

3315–280

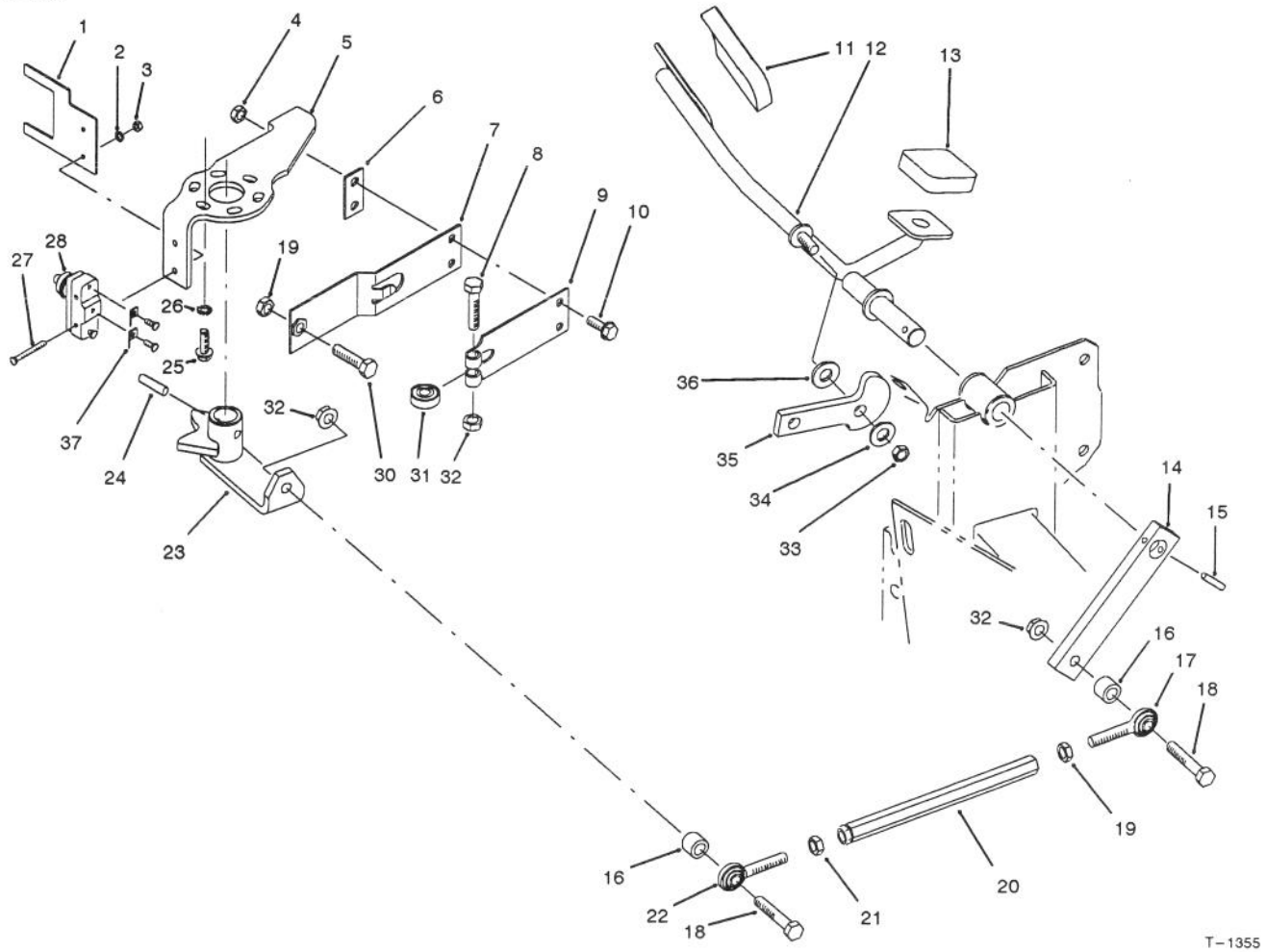

TRACTION CONTROL ASSEMBLY

Ref. No.	Part No.	Description	No. Used
1	46–8810	Stop – Spring	1
2	3254–9	Washer – ITLW	2
3	3217–16	Nut – Lock	2
4	3296–16	Nut – Lock	2
5	29–6120	Plate – Pump	1
6	51–3150	Shim – Spring	1
7	29–6170	Spring – Extended Leaf	1
8	322–17	Screw – Cap Hex. Hd.	1
9	29–6150	Spring – Leaf	1
10	321–6	Screw – Hex. Flange Hd.	2
11	74–9100	Pad – Forward	1
12	83–8270	Pedal – Traction	1
13	74–9110	Pad – Reverse	1
14	61–2610	Arm – Traction	1
15	32121–6	Pin – Roll	1
16	61–2370	Spacer	2
17	2411–52	End – Rod	1
18	322–9	Screw – Cap Hex. Hd.	2

Ref. No.	Part No.	Description	No. Used
19	3220–2	Nut – Jam	2
20	83–8760	Rod – Control	1
21	3220–20	Nut – Jam	1
22	2411–53	End – Rod	1
23	83–8770	Lever – Pump	1
24	32121–24	Pin – Roll	1
25	11–9760	Screw – Hex. Flange Hd.	3
26	3255–7	Washer – ETLW	3
27	3249–11	Screw – Round Hd.	2
28	29–6163	Switch	1
30	3210–7	Screw – Cap Hex. Hd.	1
31	251–259	Bearing – Ball	1
32	3296–29	Nut – Lock	3
33	3296–59	Nut – Lock	1
34	3256–24	Washer – Flat	1
35	74–6110	Cam – Stop	1
36	66–2920	Spacer	1
37	218–596	Tab	2

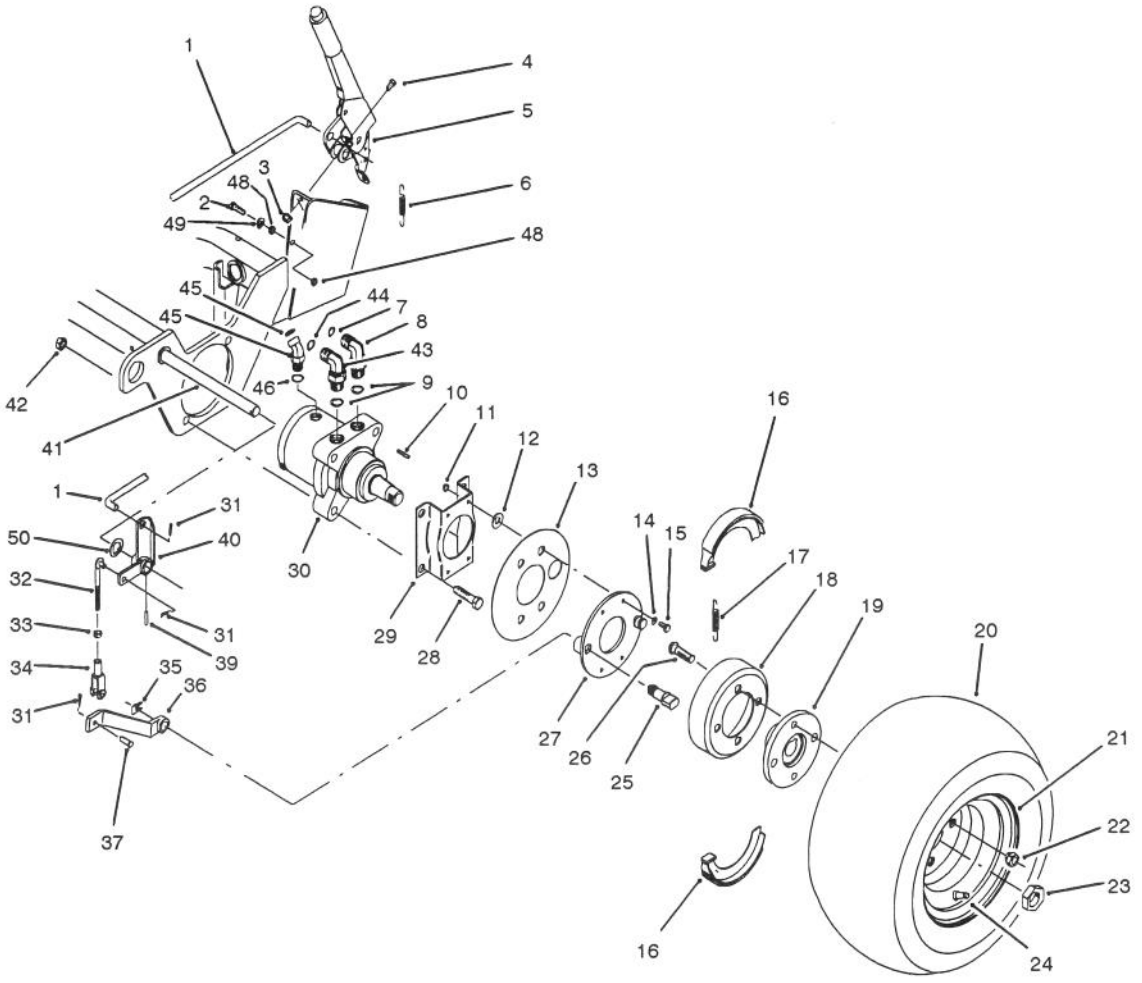

FRONT WHEEL ASSEMBLY

Ref. No.	Part No.	Description	No. Used
1	83–9350	Rod – Parking Brake	1
2	322–17	Screw – Cap Hex. Hd.	1
3	32128–44	Nut – Lock	2
4	3234–5	Screw – Hex. Washer Hd.	2
5	61–3990	Parking Brake Assembly	1
6	5–7290	Spring – Extension	1
7	237–30	Seal – O–Ring	2
8	340–105	Fitting – Hydraulic 90° (Incl. Ref. 7 & 9)	2
9	237–80	Seal – O–Ring	4
10	65–4640	Key – Square	2
11	3296–42	Nut – Lock	8
12	3256–16	Washer – Flat	8
13	83–9340	Shield – Grass	2
14	3253–3	Washer – Lock	8
15	321–5	Screw – Cap Hex. Hd.	8
16	70–9840	Shoe – Brake	4
17	70–9880	Spring – Extension	4
18	10–6821	Brake Drum Assembly (Incl. Ref. #19 & 26)	2
19	10–6870	Hub – Wheel	2
20	231–127	Tire	2
21	217–60	Rim	2
22	242–50	Nut – Lug	8

Ref. No.	Part No.	Description	No. Used
23	26–3790	Nut – Lock	2
24	232–27	Valve – Stem	2
25	70–9860	Pin – Pivot Brake	2
26	85–6540	Stud – Drive	8
27	70–9870	Plate – Brake	2
28	325–11	Screw – Cap Hex. Hd.	8
29	84–2000	Bracket – Brake	2
30	66–5291	Hydraulic Motor Assembly (Incl. Ref. #10)	2
31	3272–6	Pin – Cotter	5
32	84–1990	Rod – Adjusting	2
33	3220–2	Nut – Jam	2
34	282–2	Clevis	2
35	70–9850	Clip – Retaining	2
36	83–9250	Lever – Brake	2
37	283–1	Pin – Clevis	2
39	32121–6	Pin – Roll	2
40	83–9270	Pivot – Brake L.H.	1
*	83–9310	Pivot – Brake R.H.	1
41	83–9330	Shaft – Brake	1
42	3296–23	Nut – Lock	8
43	340–17	Fitting – Hydraulic 90° (Incl. Ref. #9 & 44)	2
44	237–65	Seal – O–Ring	2

*Not Illustrated

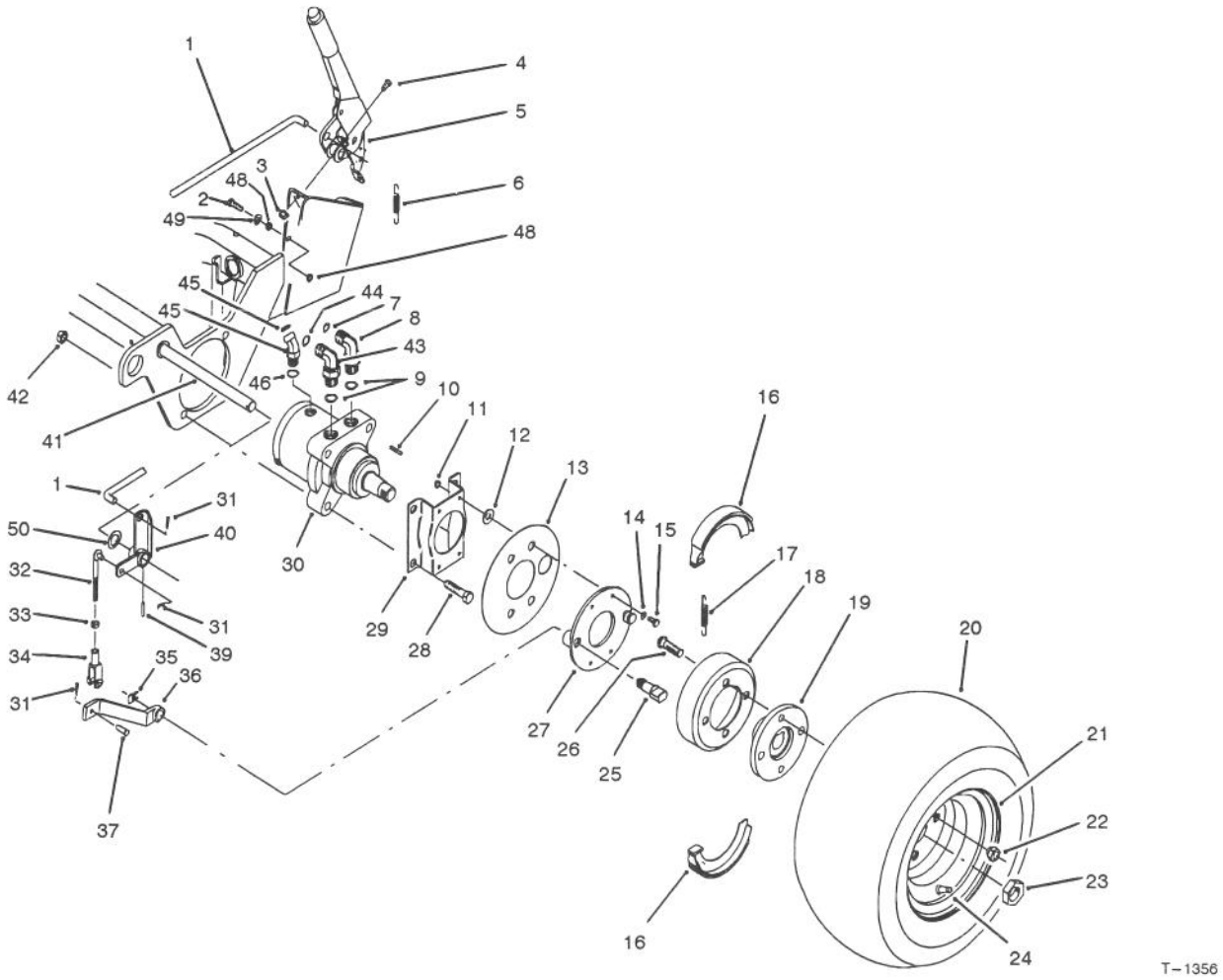

FRONT WHEEL ASSEMBLY (Continued)

Ref. No.	Part No.	Description	No. Used
45	340–103	Fitting – Hydraulic 45° (Incl. Ref. #46 & 47) (For Left Wheel Motor)	1
*	340–140	Fitting – Hydraulic Tee (Incl. Ref. #46 & 47) (For Right Wheel Motor)	1
46	237–78	Seal – O–Ring	2
47	237–21	Seal – O–Ring	3
48	32128–20	Nut – Lock	2
49	3256–23	Washer	1
50	3–6498	Washer	2
*	71–1500	Brake Assembly (Incl. Ref. #16, 17, 25, 27 & 35)	2

*Not Illustrated

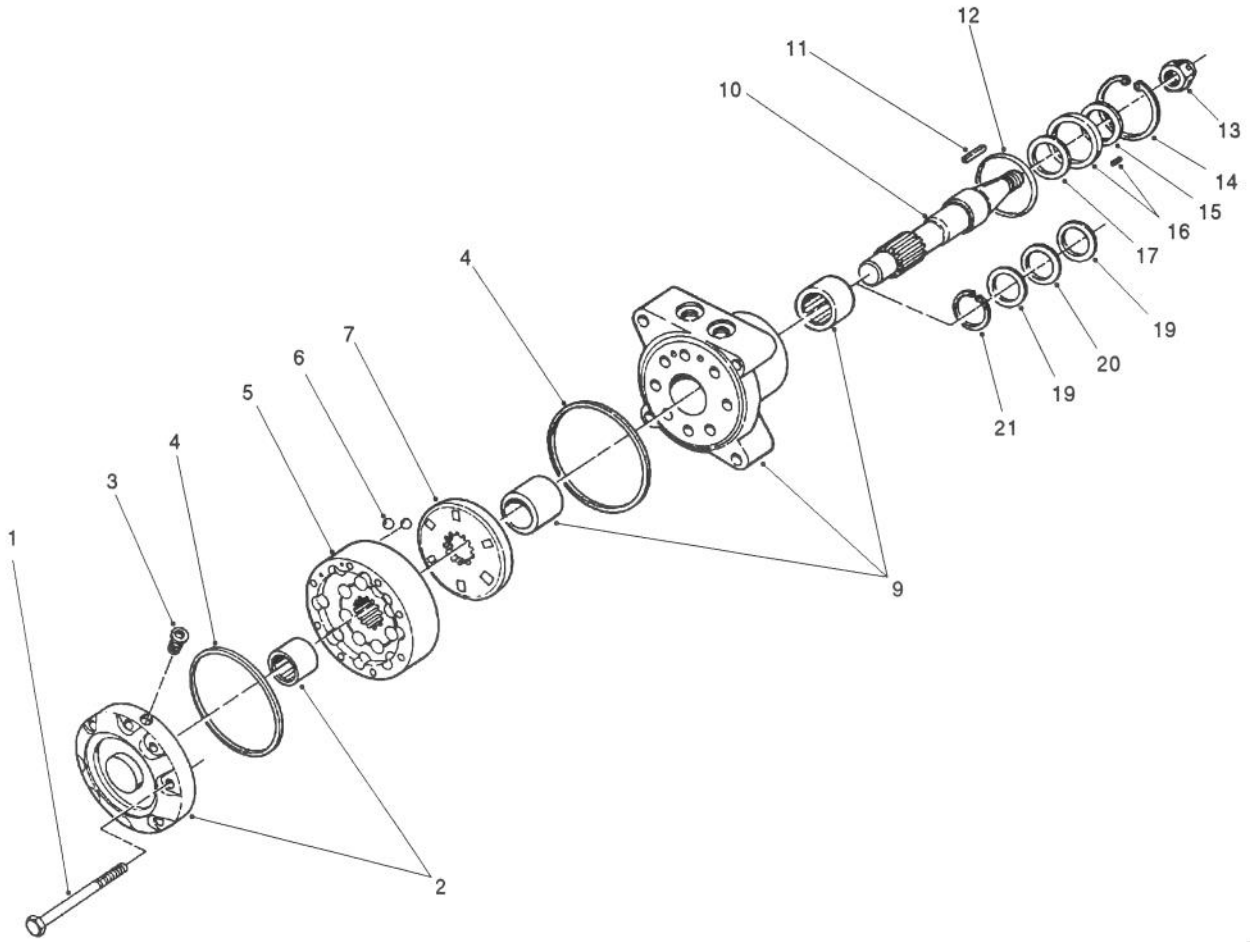

T-0274

HYDRAULIC DRIVE MOTOR ASSEMBLY NO. 66-5291

Ref. No.	Part No.	Description	No. Used
1	65-4580	Screw - Cap Hex Hd.	8
2	65-4680	Cover & Bearing Assembly	1
3	65-4560	Plug - Hex (Hollow)	1
4	65-4570	Seal - Square Ring	2
5	66-6110	IGR Assembly	1
6	65-4550	Valve - Check Ball	2
7	70-8150	Plate - Valve	1
9	65-4670	Body & Bearing Assembly	1
10	65-4660	Shaft	1
11	65-4640	Key - Square	1
12	65-4620	Seal - O-Ring	1

Ref. No.	Part No.	Description	No. Used
14	65-4500	Seal - Snap Ring	1
†15		Seal-Dust	1
†16		Retainer/Pin	1
†17		Seal-Lip	1
*	76-2350	Seal/Retainer Assembly (Incl. Ref. #15-17)	1
19	65-4600	Washer - Thrust	2
20	65-4610	Bearing - Thrust	1
21	65-4590	Ring - Snap	1
*	76-2360	Body Seal Kit (Incl. Ref. #4,12 & 15-17)	1

*Not Illustrated
†Not available from Toro as a replacement part.

3315–280

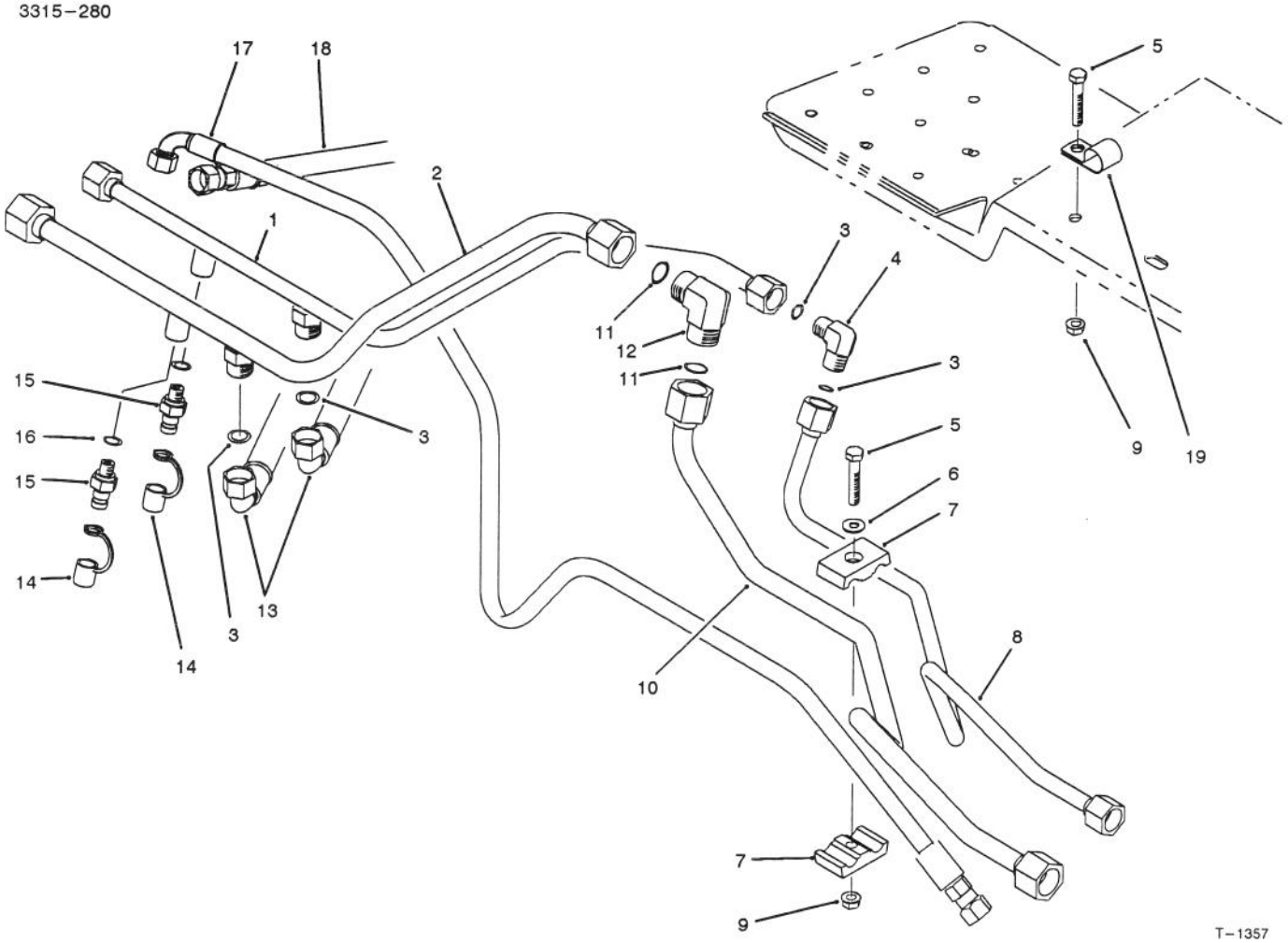

DRIVE MOTOR PLUMBING ASSEMBLY

Ref. No.	Part No.	Description	No. Used
1	83–9470	Hydraulic Tube Assembly (Incl. Ref. #3)	1
2	83–9440	Hydraulic Tube Assembly (Incl. Ref. #3)	1
3	237–30	Seal – O–Ring	4
4	340–163	Fitting – Hydraulic 90° (Incl. Ref. #3)	1
5	322–9	Screw – Cap Hex. Hd.	2
6	3256–3	Washer – Flat	1
7	56–7976	Clamp – Hydraulic Tube	2
8	83–9480	Tube – Hydraulic	1
9	3296–29	Nut – Lock	2

Ref. No.	Part No.	Description	No. Used
10	83–9450	Tube – Hydraulic	1
11	237–65	Seal – O–Ring	2
12	340–162	Fitting – Hydraulic 90° (Incl. Ref. #11)	1
13	83–9600	Hose – Hydraulic	2
14	354–79	Cap – Test Port	2
15	354–77	Hydraulic Test Port Fitting (Incl. Ref. #16)	2
16	237–78	Seal – O–Ring	2
17	85–5300	Hose – Hydraulic	1
18	85–4990	Hose – Hydraulic	1
19	2412–39	Clamp – R	1

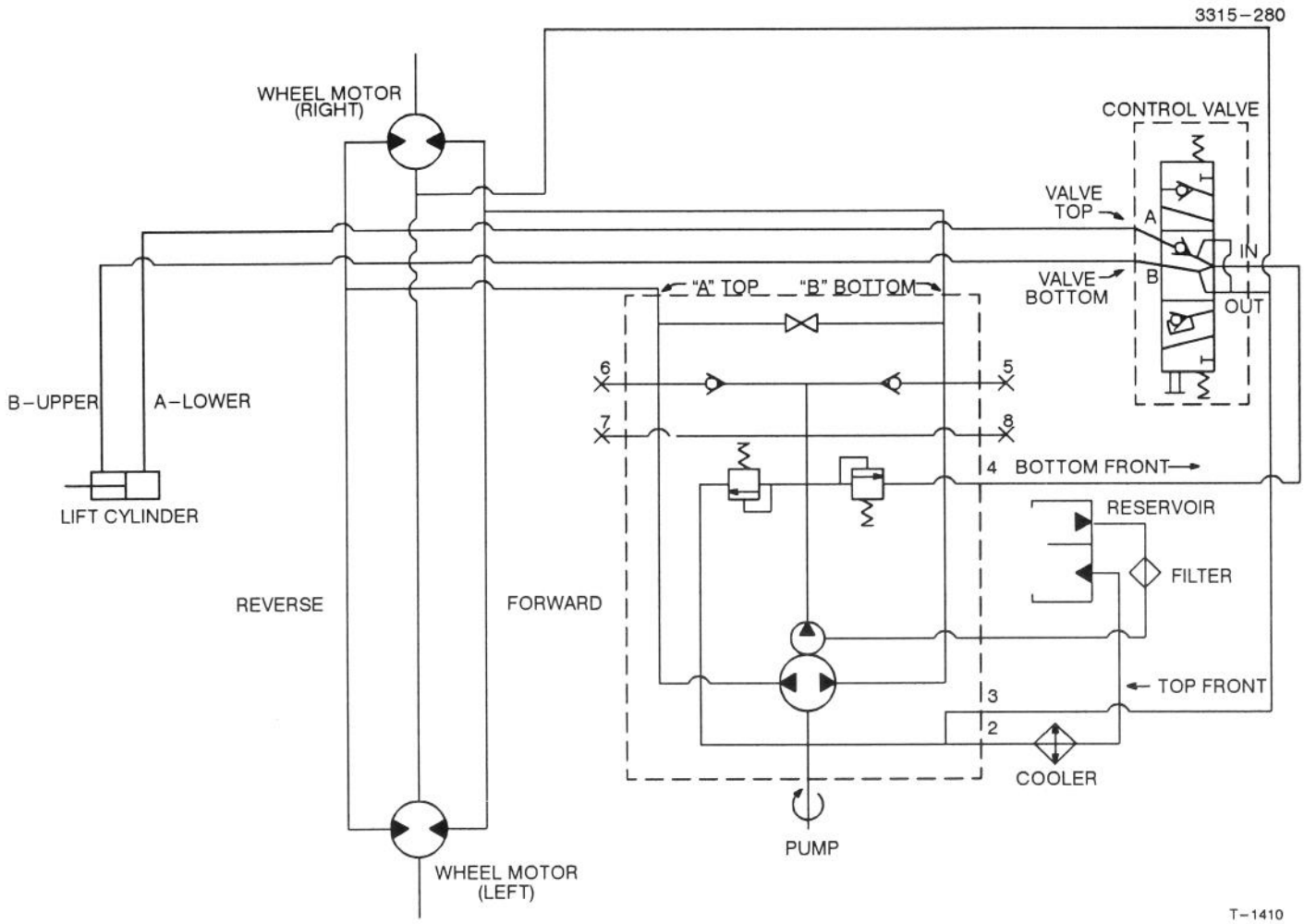

HYDRAULIC SCHEMATIC

Ref. No.	Part No.	Description	No. Used

Ref. No.	Part No.	Description	No. Used

3315–280

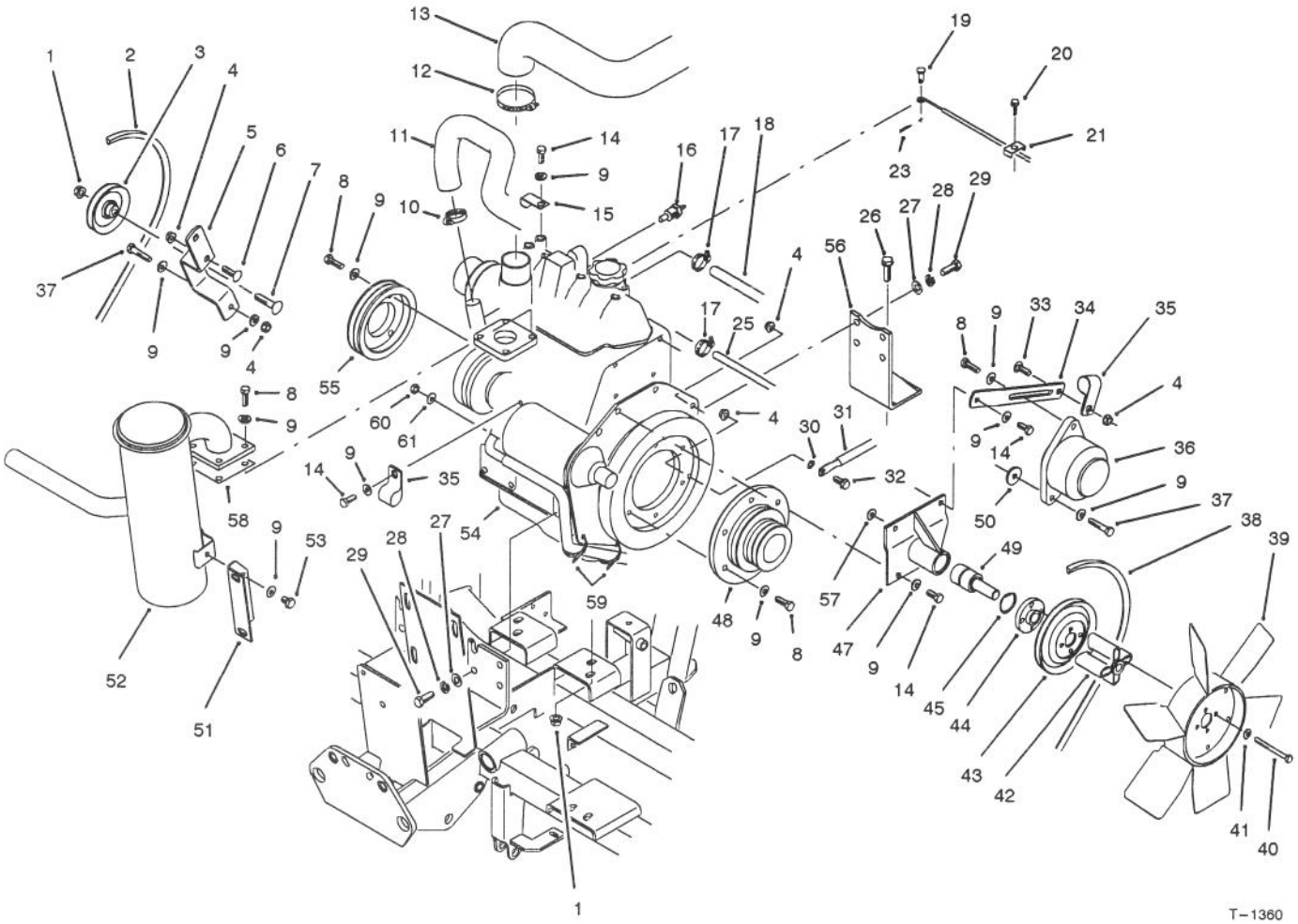

T–1360

ENGINE INSTALLATION ASSEMBLY

Ref. No.	Part No.	Description	No. Used
1	32128–43	Nut – Flange Lock	5
2	37–9090	Belt – V	1
3	63–8140	Pulley – Idler	1
4	32128–44	Nut – Flange Lock	5
5	83–7690	Bracket – Idler	1
6	3230–22	Screw – Carriage	1
7	3231–26	Screw – Carriage	1
8	48–9460	Screw – Cap Hex. Hd.	14
9	3256–23	Washer – Flat	23
10	2412–34	Clamp – Hose	1
11	83–9070	Hose – Coolant	1
12	2412–92	Clamp – Hose	1
13	83–8550	Hose – Air Intake	1
14	48–7700	Screw – Cap Hex. Hd.	6
15	249–53	Clamp – J	1
16	82–3110	Sensor – Temp	1
17	2412–108	Clamp – Hose	2
18	63–7620	Hose – Fuel	1
19	283–62	Pin – Clevis	1
20	3290–432	Screw – Hex. Hd.	1
21	81–1690	Clamp – Throttle Cable	1
23	3272–9	Pin – Cotter	1
25	75–4703	Hose – Fuel	1
26	3234–24	Screw – Hex. Flange Hd.	4
27	3256–24	Washer – Flat	16
28	48–9590	Washer – Lock	16

Ref. No.	Part No.	Description	No. Used
29	48–7780	Screw – Cap Hex. Hd.	16
30	3255–8	Washer – Lock E.T.L.W.	1
31	83–9210	Cable – Ground	1
32	3234–5	Screw – Hex. Washer Hd.	1
33	3230–1	Screw – Carriage	1
34	83–7700	Bracket – Alternator	1
35	2412–39	Clamp – R	2
†36	185046210	Alternator	1
37	322–7	Screw – Cap Hex. Hd.	2
38	83–9020	Belt – V	1
†39	145306380	Fan	1
40	321–14	Screw – Cap Hex. Hd.	4
41	48–8010	Washer – Flat	4
42	83–7620	Spacer – Fan	1
43	83–7630	Pulley – Fan	1
44	83–7610	Hub – Fan	1
45	32120–10	Ring – Retaining	1
47	83–9880	Bracket – Fan Spindle	1
48	83–8410	Pulley – Engine	1
49	36–7290	Spindle – Fan	1
50	62–9510	Washer – Flat	1
51	83–8220	Bracket – Muffler	1
52	83–8500	Muffler	1
53	3234–28	Screw – Hex. Washer Hd.	1
54	83–7540	Engine Assembly	1
55	83–7590	Pulley – Engine	1

†Obtain from your local Perkins Dealer.

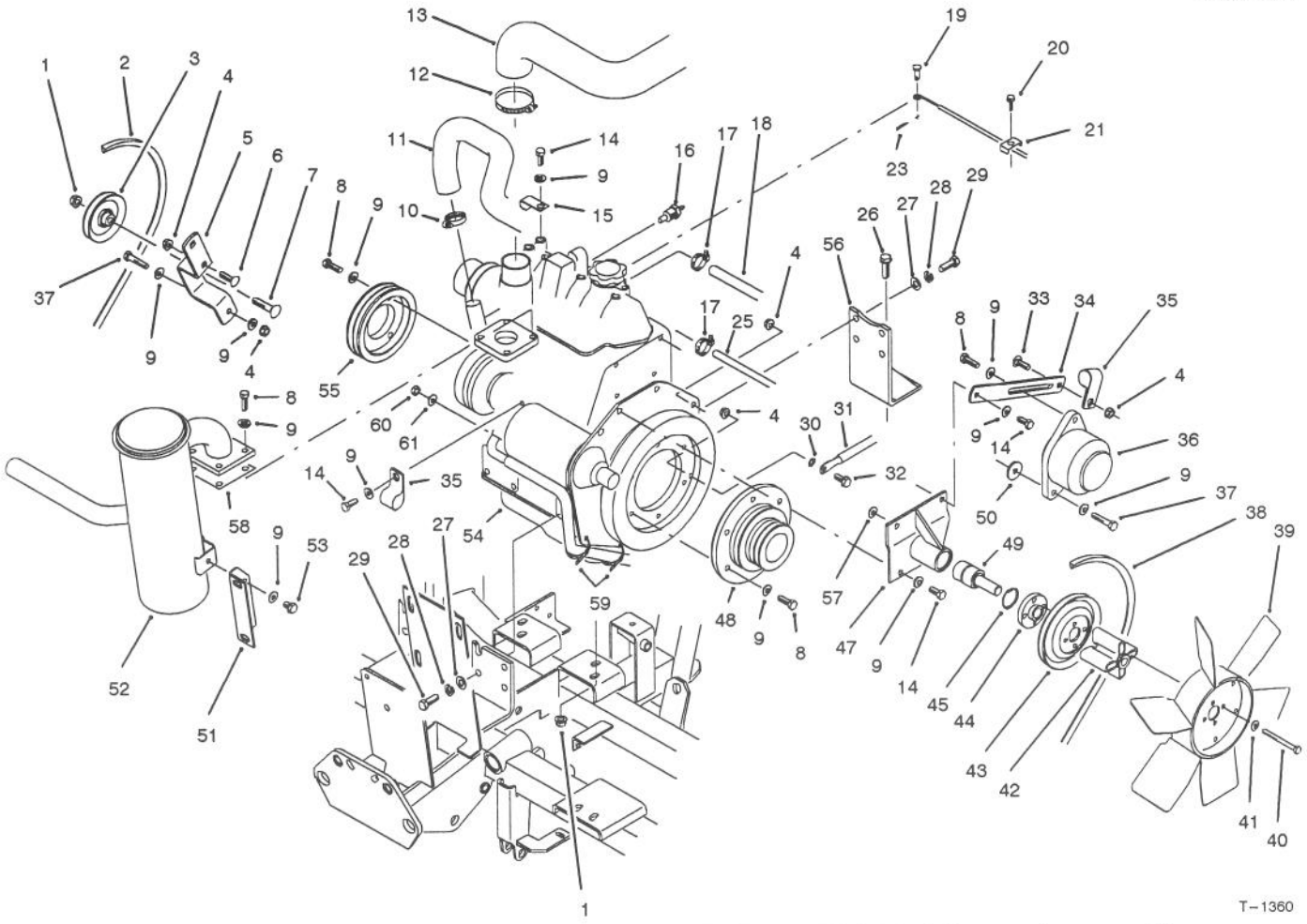

T–1360

ENGINE INSTALLATION ASSEMBLY (Continued)

Ref. No.	Part No.	Description	No. Used
56	83–8470	Bracket – Engine Mount	2
57	65–8270	Waher	1
58	83–9910	Gasket – Muffler	1

Ref. No.	Part No.	Description	No. Used
59	3290–379	Tie – Cable	2
60	57–6390	Nut	1
61	42–9850	Washer	1

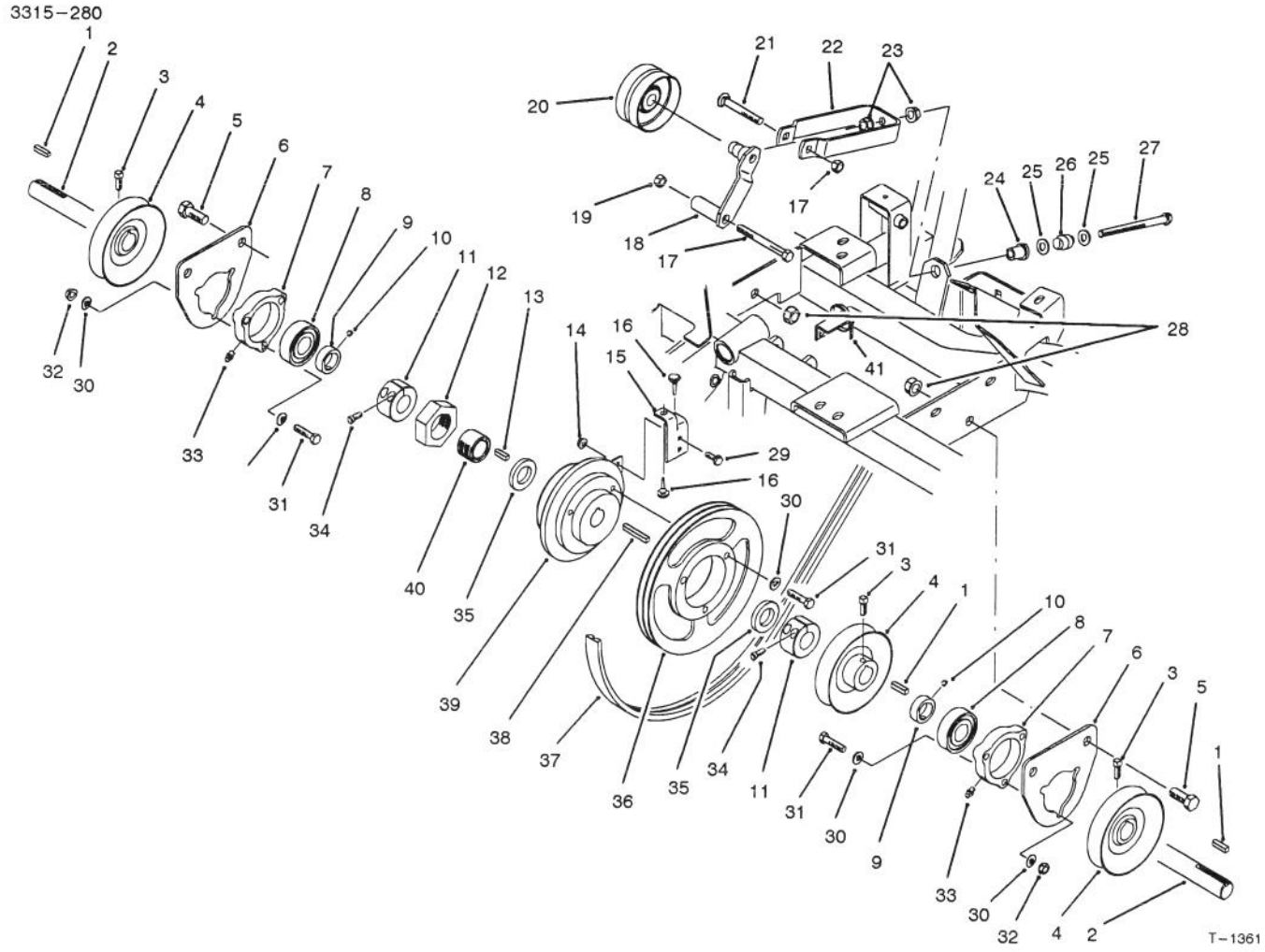

REEL DRIVE ASSEMBLY

Ref. No.	Part No.	Description	No. Used
1	5–7280	Key – Square	3
2	83–7820	Shaft – Drive	1
3	3242–4	Screw – Square Hd. Set	6
4	61–0140	Pulley – Reel	3
5	3234–32	Screw – Cap Hex. Hd.	4
6	61–2350	Support – Bearing	2
7	76–2460	Bearing Assembly (Incl. Ref. #7–10 & 33)	2
8	251–337	Bearing – Ball	2
9	251–77	Collar – Locking	2
10	3245–35	Screw – Set	4
11	83–7790	Collar	2
12	3218–17	Nut – Jam	1
13	10–7070	Key – Square	1
14	32128–33	Nut – Flange Lock	2
15	83–7830	Retainer – Clutch	1
16	240–13	Bumper	2
17	3296–39	Nut – Lock	2
18	83–8620	Bracket – Idler	1
19	323–15	Screw – Cap Hex. Hd.	1
20	83–8400	Pulley – Idler	1

Ref. No.	Part No.	Description	No. Used
21	3231–31	Bolt – Carriage	1
22	83–8630	Yoke – Belt Tension	1
23	32128–43	Nut – Flange Lock	2
24	83–9810	Bushing – Flange	1
25	3256–24	Washer – Flat	2
26	83–9690	Spring – Compression	1
27	83–9680	Screw – Cap Hex. Hd.	1
28	3296–23	Nut – Flange Lock	4
29	3234–4	Screw – Hex. Flange Hd.	2
30	3256–23	Washer – Flat	15
31	322–17	Screw – Cap Hex. Hd.	9
32	3296–29	Nut – Flange Lock	6
33	302–5	Fitting – Grease	2
34	3273–18	Screw – Hex. Socket Hd.	4
35	83–7810	Spacer	2
36	83–8420	Pulley – Clutch	1
37	83–8490	Belt – Drive	1
38	83–8080	Key – Square	1
39	83–9140	Clutch Assembly	1
40	83–7800	Sleeve	1
41	3290–379	Tie – Cable	1

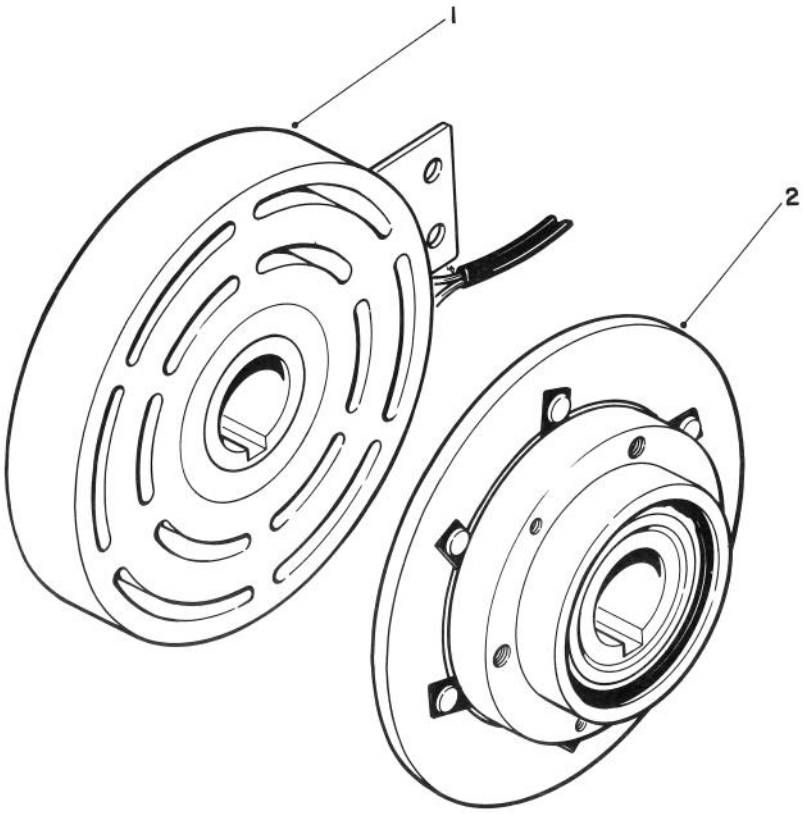

T–1362

ELECTRIC CLUTCH ASSEMBLY NO. 83–9140

Ref. No.	Part No.	Description	No. Used
1	84–7770	Field & Rotor Assembly	1

Ref. No.	Part No.	Description	No. Used
2	84–7780	Armature Assembly	1

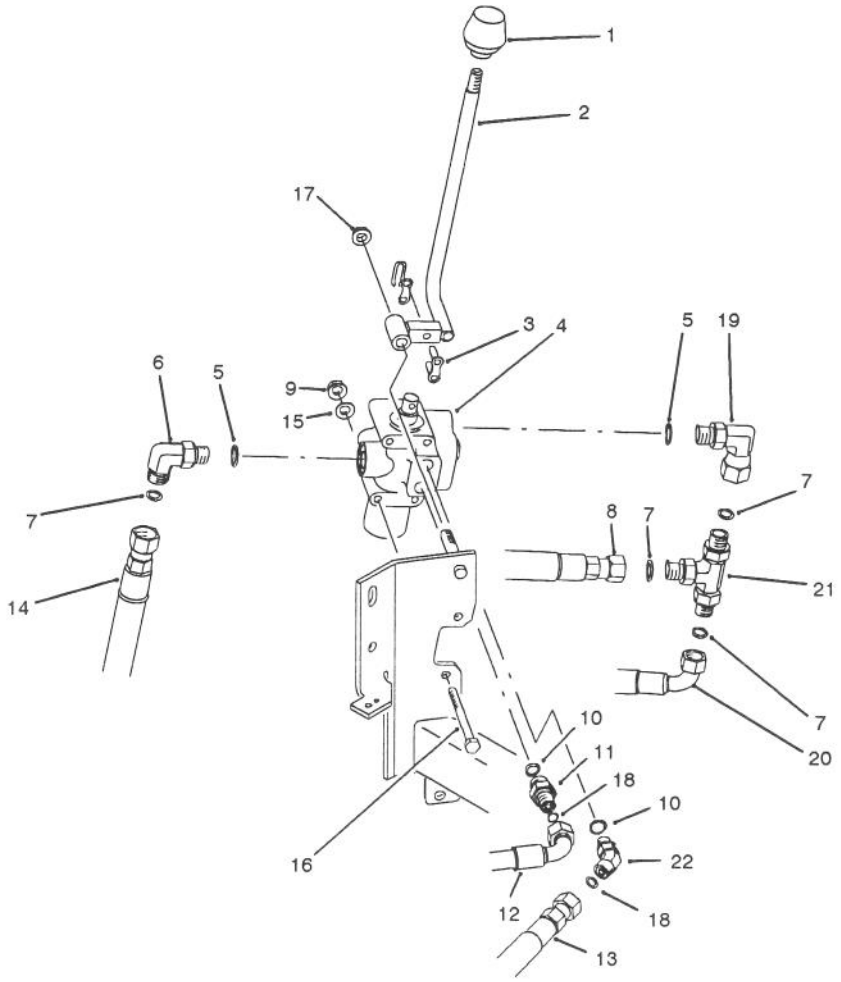

T–1376

CUTTING UNIT LIFT VALVE INSTALLATION ASSEMBLY

Ref. No.	Part No.	Description	No. Used
1	233–37	Knob	1
2	85–5160	Lever – Lift Valve	1
3	2710–16	Connecting Link Assembly	1
4	43–1950	Lift Valve Assembly	1
5	237–42	Seal – O–Ring	1
6	340–77	Fitting – Hydraulic 90° (Incl. Ref. #5 & 7)	1
7	237–22	Seal – O–Ring	4
8	83–9630	Hose – Hydraulic	1
9	3296–16	Nut – Flange Lock	2
10	237–78	Seal – O–Ring	2
11	340–92	Fitting – Hydraulic Straight (Incl. Ref. #10 & 18)	1
12	83–9620	Hose – Hydraulic	1

Ref. No.	Part No.	Description	No. Used
13	85–5310	Hose – Hydraulic	1
14	83–9640	Hose – Hydraulic	1
15	3256–22	Washer – Flat	2
16	321–23	Screw – Cap Hex. Hd.	2
17	3296–39	Nut – Flange Lock	1
18	237–21	Seal – O–Ring	2
19	340–110	Fitting – Hydraulic 90° (Incl. Ref. #5)	1
20	85–4990	Hose – Hydraulic	1
21	340–20	Fitting – Hydraulic Tee (Incl. Ref. #7)	1
22	340–103	Fitting – Hydraulic 45° (Incl. Ref. #10 & 18)	1

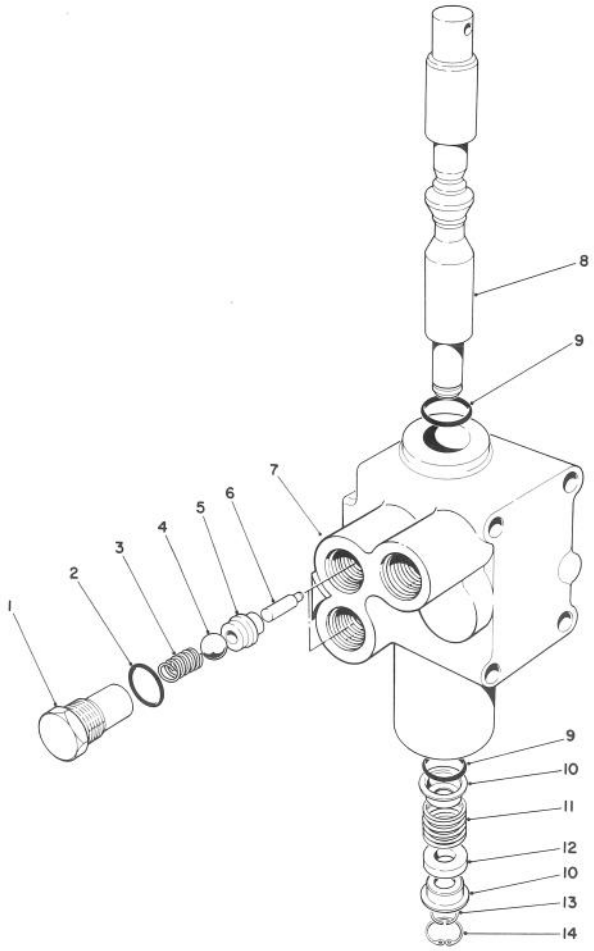

T-0280

CONTROL VALVE ASSEMBLY NO. 43-1950

Ref. No.	Part No.	Description	No. Used
1	22-8330	Plug	2
2	237-42	Seal - O-Ring	2
3	22-8340	Spring	2
4	22-8350	Ball	2
5	22-8370	Seat - Check Valve	2
6	22-8360	Pin - Cam	2
7		Body	1

Ref. No.	Part No.	Description	No. Used
8	22-8420	Spool	1
9	22-8500	Seal - O-Ring	2
10	22-8380	Retainer - Spring	2
11	22-8410	Spring	1
12	23-3030	Spacer	1
13	22-8480	Snap Ring - Spool	1
14	22-8490	Snap Ring	1

3315–280

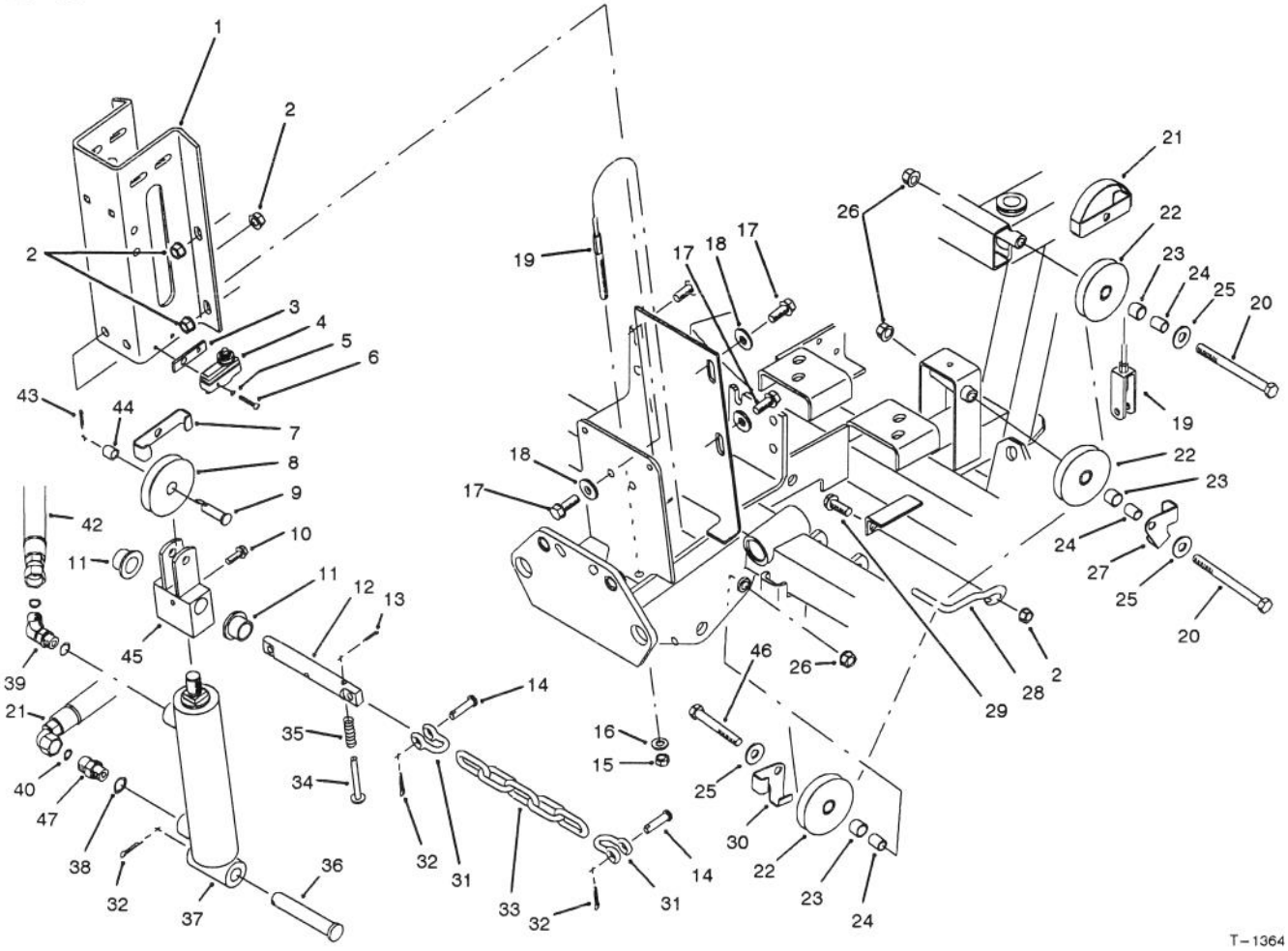

T–1364

CUTTING UNIT LIFT ASSEMBLY

Ref. No.	Part No.	Description	No. Used
1	83–9760	Bracket – Cylinder Support	1
2	32128–43	Nut – Flange Lock	7
3	61–2990	Spacer – Switch	1
4	29–6163	Switch – Lift	1
5	3254–9	Washer – Lock Internal	2
6	3250–35	Screw – Pan Hd.	2
7	5–2655	Keeper – Cable	1
8	5–2653	Cable Pulley Assembly (Incl. Ref. #44)	1
9	283–42	Pin – Clevis	1
10	3234–4	Screw – Hex. Washer Hd.	1
11	84–8440	Bushing – Flange	2
12	72–4190	Pin – Cylinder Guide	1
13	3272–4	Pin – Cotter	1
14	283–6	Pin – Clevis	4
15	3296–4	Nut – Lock	1
16	3256–23	Washer – Flat	1
17	3234–25	Screw – Hex. Washer Hd.	5
18	80–6990	Washer	4
19	83–8590	Cable – Lift	1
20	323–17	Screw – Cap Hex. Hd.	2
21	61–3240	Keeper – Cable	1
22	61–3210	Cable Pulley Assembly (Incl. Ref. #23)	3
23	256–1	Bushing – Sleeve	3
24	61–3230	Spacer	3

Ref. No.	Part No.	Description	No. Used
25	3256–24	Washer – Flat	3
26	3296–39	Nut – Flange Lock	3
27	83–9130	Keeper – Cable	1
28	63–1400	Guide – Cable	1
29	3234–11	Screw – Hex. Washer Hd.	1
30	5–2656	Keeper – Cable	1
31	282–4	Clevis	4
32	3272–11	Pin – Cotter	5
33	61–3830	Chain – Lift	2
34	71–1380	Pin – Spring	1
35	71–1370	Spring – Compression	1
36	283–78	Pin – Clevis	1
37	76–0020	Hydraulic Cylinder Assembly	1
38	237–42	Seal – O–Ring	2
39	340–87	Fitting – Hydraulic 45° (Incl. Ref. #38 & 40)	1
40	237–22	Seal – O–Ring	2
41	85–5310	Hose – Hydraulic	1
42	83–9620	Hose – Hydraulic	1
43	3272–6	Pin – Cotter	1
45	61–2430	Hub – Lift	1
44	256–2	Bushing – Sleeve	1
46	323–13	Screw – Cap Hex. Hd.	1
47	340–2	Fitting – Hydraulic Straight (Incl. Ref. #38 & 40)	1

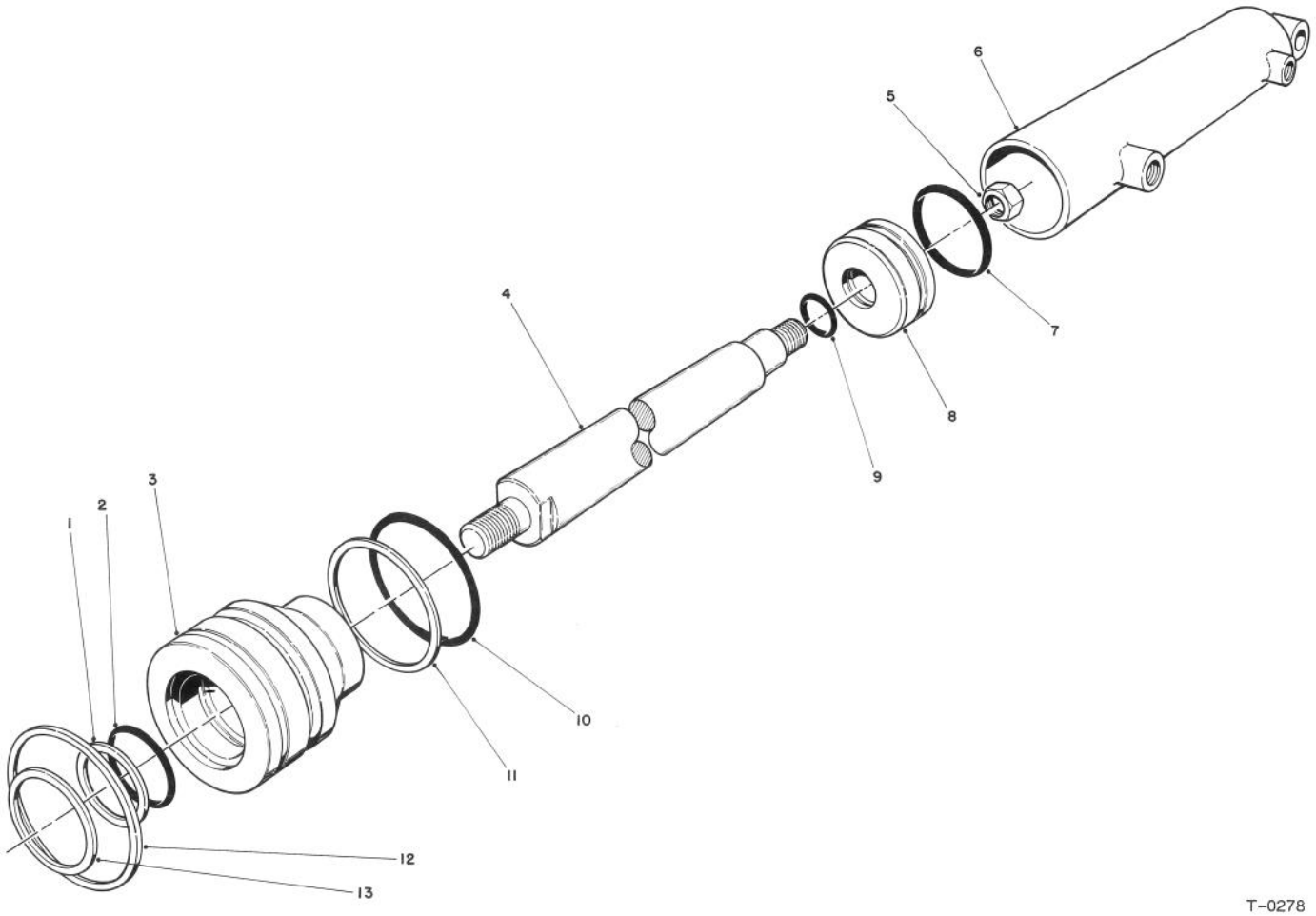

T-0278

HYDRAULIC CYLINDER ASSEMBLY NO. 76-0020

Ref. No.	Part No.	Description	No. Used
1		Washer - Backup	1
2		Seal - O-Ring	1
3	76-0090	Head	1
4	76-2320	Shaft	1
5	76-2330	Nut - Lock	1
6		Barrel	1
7		Uniring	1
8	76-0040	Piston	1

Ref. No.	Part No.	Description	No. Used
9		Seal - O-Ring	1
10		Seal - O-Ring	1
11		Washer - Backup	1
12	76-0050	Ring - Retaining	1
13		Seal-Dust	1
*	76-0030	Repair Kit (Incl. Ref. #1-2, 7, 9-11 &13)	1

*Not Illustrated

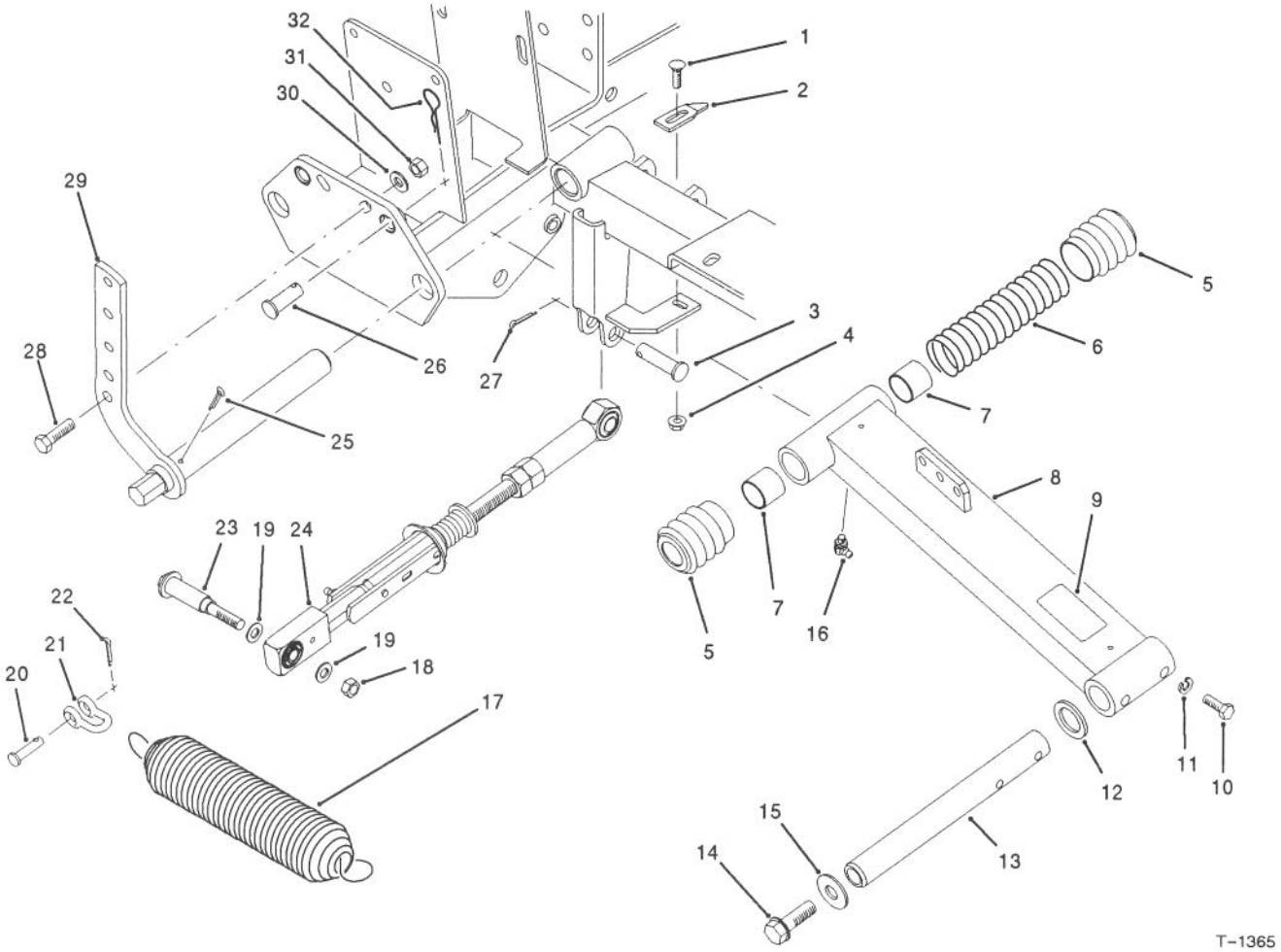

T-1365

FRONT CUTTING UNIT LIFT ARM ASSEMBLY

Ref. No.	Part No.	Description	No. Used
1	3229-1	Bolt - Carriage	2
2	76-2430	Scraper - Pulley	2
3	283-40	Pin - Clevis	2
4	32128-33	Nut - Flange Lock	2
5	61-7250	Boot	4
6	61-3270	Spring - Compression	2
7	3-0348	Bushing - Sleeve	4
8	61-2880	Lift Arm Assembly L.H. (Incl. Ref. #7 & 16)	1
*	61-2830	Lift Arm Assembly R.H. (Incl. Ref. #7 & 16)	1
‡9	55-4300	Decal - Warning	2
10	322-4	Screw - Cap Hex. Hd.	4
11	3253-4	Washer - Lock	4
12	256-115	Washer - Thrust	2
13	61-3000	Rod - Pivot	2
14	3234-32	Screw - Hex. Flange Hd.	2
15	3256-6	Washer - Flat	2

Ref. No.	Part No.	Description	No. Used
16	302-60	Fitting - Grease	2
17	5-0743	Spring - Extension	2
18	3296-59	Nut - Lock	2
19	3256-45	Washer - Flat	4
20	283-6	Pin - Clevis	2
21	282-4	Clevis	2
22	3272-11	Pin - Cotter	2
23	76-0370	Bolt - Shoulder	2
24	83-7900	Belt Tensioner Assembly	2
25	3272-17	Pin - Cotter	2
26	283-8	Pin - Clevis	2
27	3272-13	Pin - Cotter	2
28	323-7	Screw - Cap Hex. Hd.	2
29	61-2930	Shaft - Pivot L.H.	1
*	61-2900	Shaft - Pivot R.H.	1
30	3256-24	Washer - Flat	2
31	3296-39	Nut - Lock	2
32	3290-322	Pin - Hair	2

*Not Illustrated

‡For different language versions of this part, see International Decal Cross Reference.

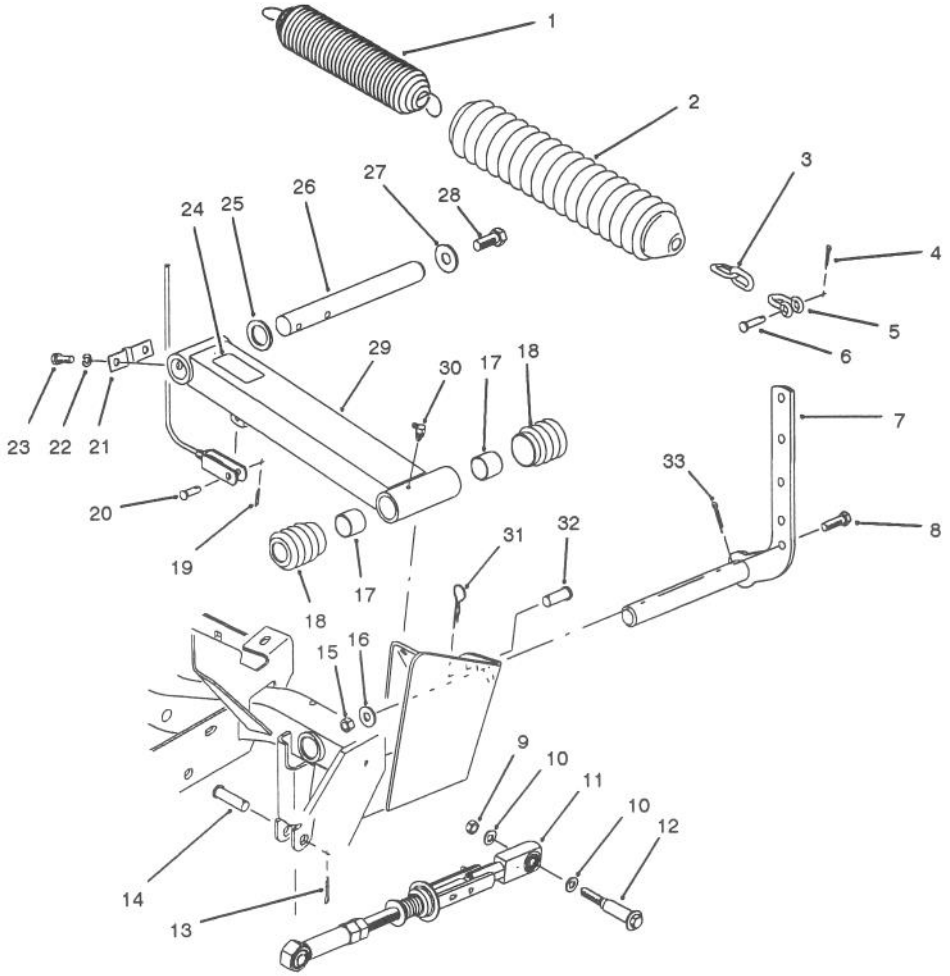

T–1366

REAR CUTTING UNIT LIFT ARM ASSEMBLY

Ref. No.	Part No.	Description	No. Used
1	5–0743	Spring – Extension	1
2	62–7240	Cover – Spring	1
3	62–7300	Chain	1
4	3272–11	Pin – Cotter	1
5	282–4	Clevis	1
6	283–6	Pin – Clevis	1
7	61–2930	Shaft – Pivot	1
8	323–7	Screw – Cap Hex. Hd.	1
9	3296–59	Nut – Lock	2
10	3256–45	Washer – Flat	4
11	83–7900	Belt Tensioner Assembly	2
12	76–0370	Bolt – Shoulder	2
13	3272–13	Pin – Cotter	2
14	283–40	Pin – Clevis	2
15	3296–39	Nut – Lock	1
16	3256–24	Washer – Flat	1
17	3–0348	Bushing – Sleeve	2

Ref. No.	Part No.	Description	No. Used
18	62–7250	Boot	2
19	3272–6	Pin – Cotter	1
20	283–1	Pin – Clevis	1
21	61–3820	Retainer – Cable	1
22	3253–4	Washer – Lock	2
23	322–4	Screw – Cap Hex. Hd.	2
‡24	55–4300	Decal – Warning	1
25	256–115	Washer – Thrust	1
26	61–3000	Rod – Pivot	1
27	3256–6	Washer – Flat	1
28	3234–32	Screw – Cap Hex. Hd.	1
29	61–2890	Lift Arm Assembly (Incl. Ref. #17 & 30)	1
30	302–60	Fitting – Grease	1
31	3290–322	Pin – Hair	1
32	283–8	Pin – Clevis	1
33	3272–17	Pin – Cotter	1

‡For different language versions of this part, see International Decal Cross Reference.

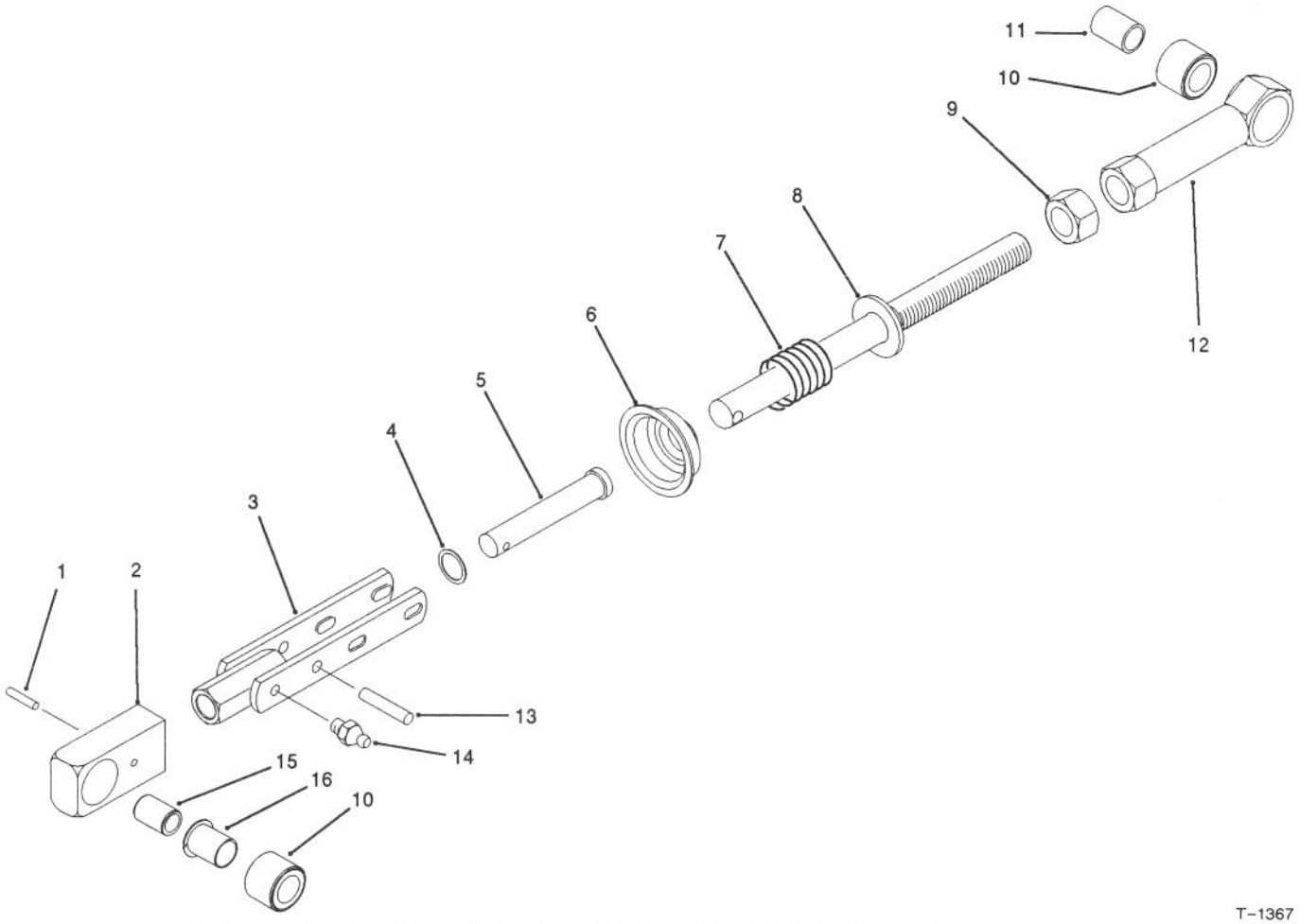

T-1367

BELT TENSIONER ASSEMBLY NO. 83-7900

Ref. No.	Part No.	Description	No. Used
1	32121-23	Pin - Roll	1
2	76-0350	Housing - Bushing	1
3	83-7930	Yoke	1
4	3256-54	Washer - Flat	1
5	283-55	Pin - Clevis	1
6	76-0360	Cup - Retainer	1
7	76-0410	Spring - Compression	1
8	83-7910	Rod	1

Ref. No.	Part No.	Description	No. Used
9	3218-6	Nut - Jam	1
10	56-9510	Bushing Assembly	2
11	256-173	Bushing - Sleeve	1
12	76-0300	Housing - Bushing	1
13	32121-9	Pin - Roll	1
14	302-5	Fitting - Grease	1
15	76-0390	Spacer	1
16	56-9520	Bushing - Nyliner	1

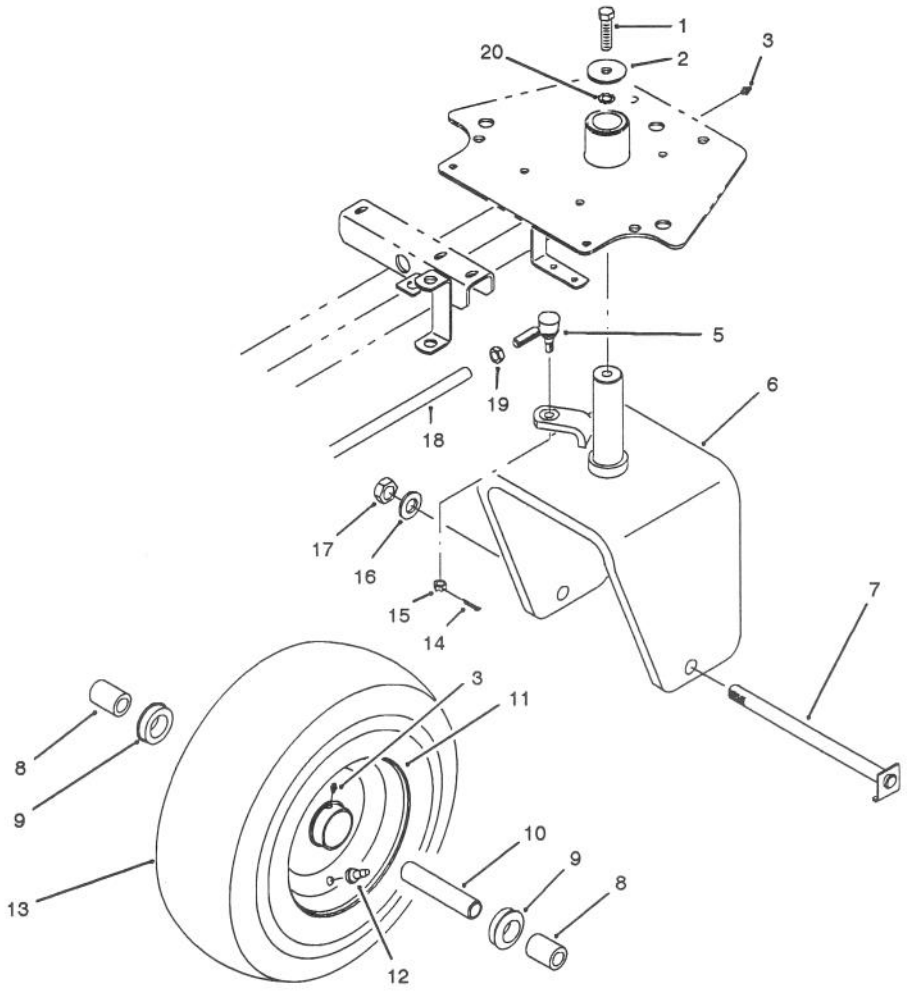

T–1368

REAR WHEEL ASSEMBLY

Ref. No.	Part No.	Description	No. Used
1	325–6	Screw – Cap Hex. Hd.	1
2	75–7730	Spacer	1
3	302–5	Fitting – Grease	2
5	20–0150	Rod End Assembly (Incl. Ref. #15)	1
6	83–7340	Fork – Caster	1
7	61–1960	Axle – Wheel	1
8	68–4210	Spacer – Wheel	2
9	251–321	Bearing – Wheel	2
10	241–130	Spacer – Bearing	1

Ref. No.	Part No.	Description	No. Used
11	241–129	Rim	1
12	232–47	Valve – Stem	1
13	231–122	Tire	1
14	3272–6	Pin – Cotter	1
15	32136–4	Nut – Castle	1
16	3256–28	Washer – Flat	1
17	3296–51	Nut – Lock	1
18	61–2070	Rod – Steering	1
19	3220–12	Nut – Jam	1
20	3255–2	Washer – Lock	1

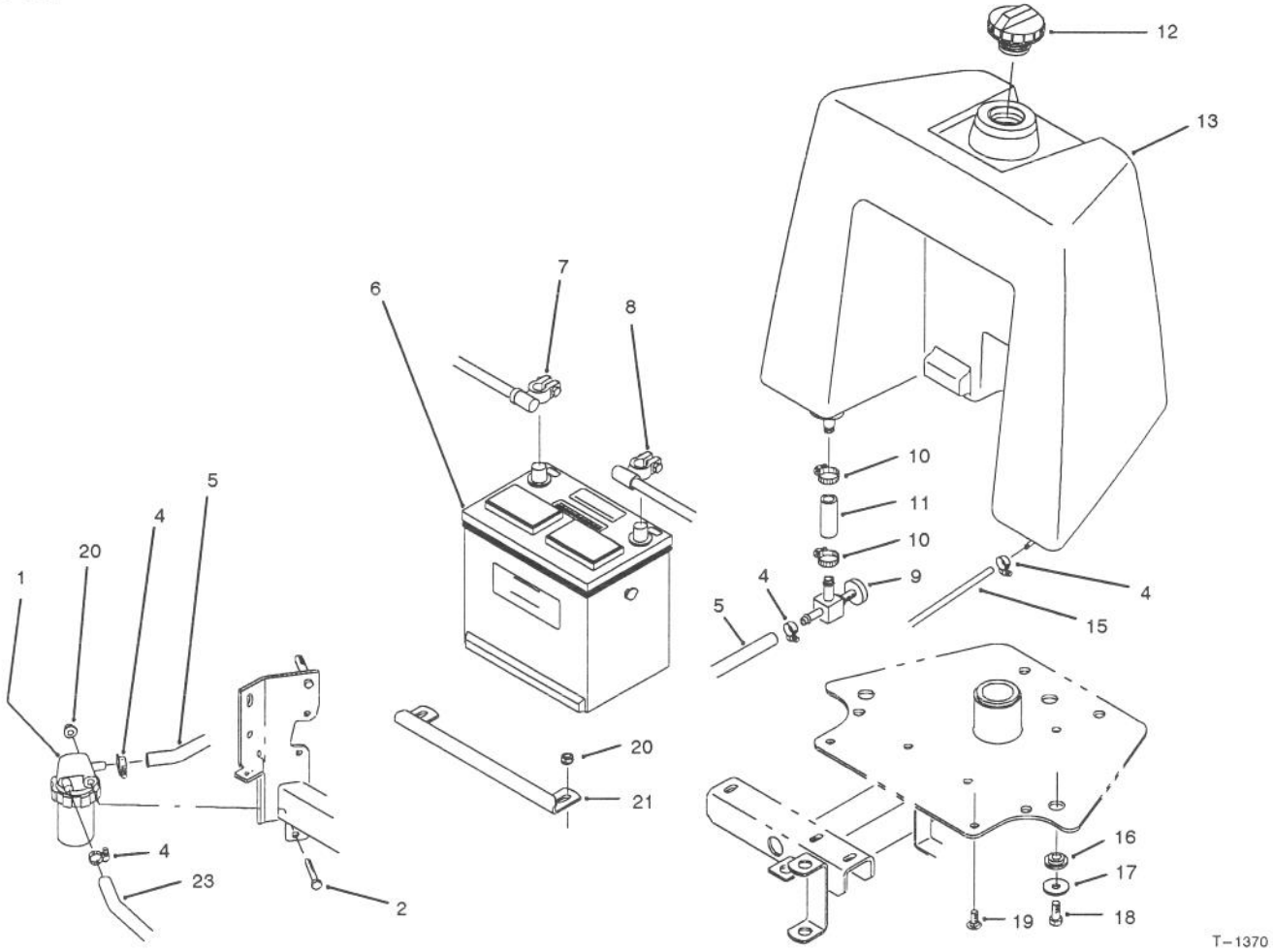

FUEL SYSTEM ASSEMBLY

Ref. No.	Part No.	Description	No. Used
†1	130366040	Fitler – Fuel	1
2	321–12	Screw – Cap Hex. Hd.	1
4	2412–108	Clamp – Hose	4
5	63–7620	Hose – Fuel	1
6	83–9000	Battery	1
7	83–9220	Cable – Battery Pos.	1
8	83–9210	Cable – Battery Neg.	1
9	56–2520	Valve – Fuel Shut–Off	1
10	2412–36	Clamp – Hose	2
11	56–2230	Hose – Fuel	1

Ref. No.	Part No.	Description	No. Used
12	70–8621	Cap – Fuel Tank	1
13	83–8720	Tank – Fuel	1
15	75–4703	Hose – Fuel	1
16	240–11	Grommet	3
17	63–8410	Washer – Flat	3
18	323–5	Screw – Cap Hex. Hd.	3
19	3230–1	Screw – Carriage	2
20	32128–44	Nut – Flange Lock	3
21	83–9240	Hold–Down – Battery	1
23	23–2140	Hose – Fuel	1

†Obtain from your local Perkins Dealer.

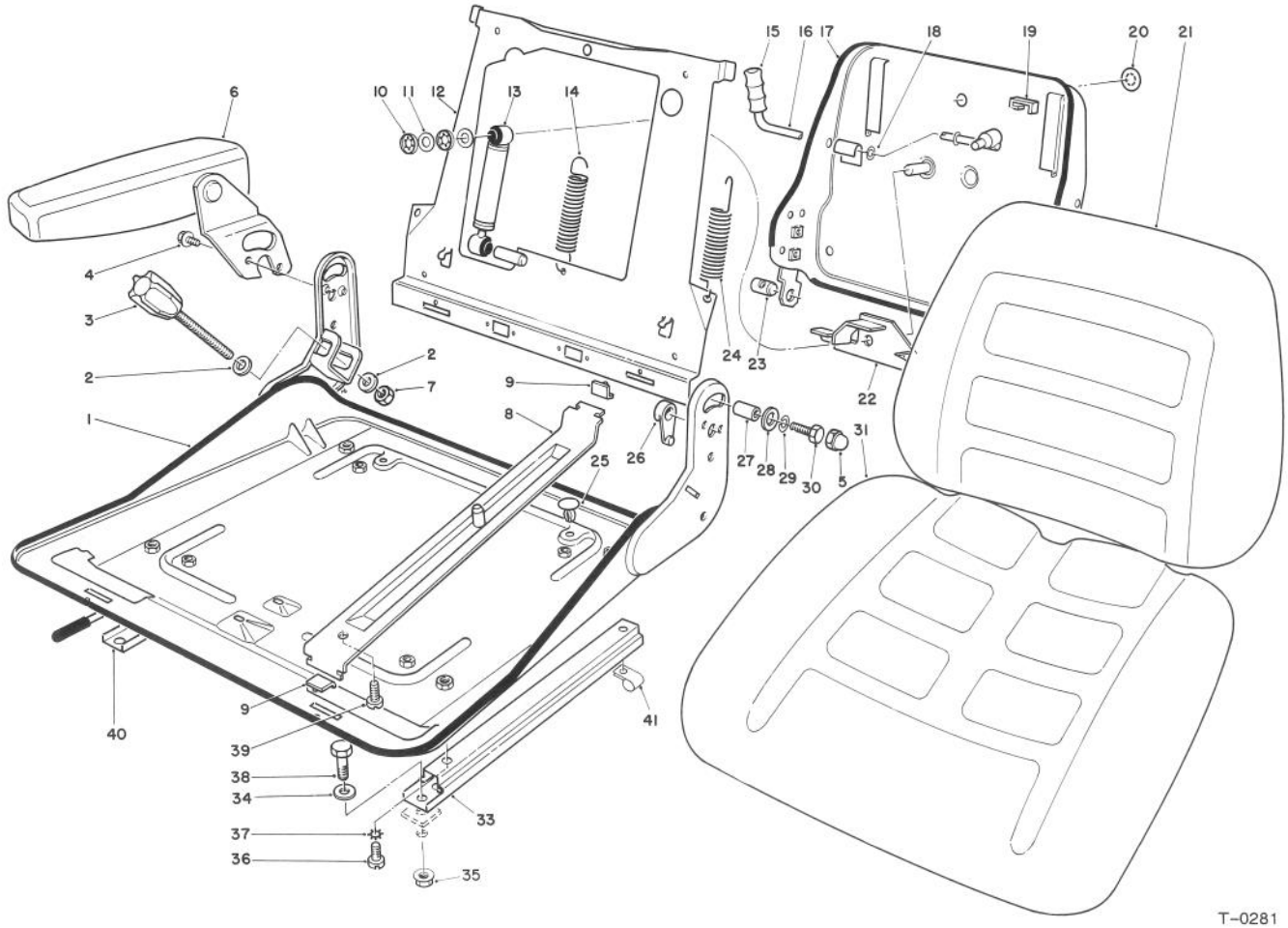

T-0281

SEAT ASSEMBLY MODEL NO. 30797 (Optional)

Ref. No.	Part No.	Description	No. Used
1	56-3810	Platform - Seat	1
2	56-3880	Washer - Flat	2
3	56-3870	Knob - Adjustment	1
4	56-3850	Screw - Hex. Hd. Machine	2
5	56-3960	Cover - Screw	4
6	55-4331	Arm Rest Assembly R.H.	1
	55-4330	Arm Rest Assembly L.H.	1
7	56-3890	Nut - Hex.	1
8	56-3970	Carrier - Seat	2
9	56-3980	Clip - Rail	4
10	56-4080	Clamp - Axle	2
11	39-9500	Washer - Flat	2
12	56-4040	Plate - Back	1
13	62-7670	Shock Absorber - Seat	1
14	56-4050	Spring - Extension	1
15		Grip - Cover	1
16	56-4150	Lever - Handle (Incl. Ref. #15)	1
17	56-3820	Cover - Seat Sack	1
18	56-4160	Washer - Flat	2
19	56-4130	Bumper	2
20	56-4120	Cover	1
21	56-3800	Cushion - Seat Back	1
22	56-4100	Bracket - Lever	1

Ref. No.	Part No.	Description	No. Used
23	56-4170	Pin - Clevis	1
24	56-4060	Spring - Extension	1
25	56-4190	Cap - Seat	2
26	56-3900	Spacer - Arm L.H.	1
	56-3910	Spacer - Arm R.H.	1
27	56-3920	Bushing - Sleeve	4
28	56-3930	Washer - Flat	4
29	56-3940	Washer - Lock	4
30	56-3950	Screw - Cap Hex. Hd.	4
31	76-2240	Cushion - Seat Bottom	1
32	55-8380	Seat Wire Assembly	1
33	40-3820	Bottom Rail Assembly L.H.	1
34	3256-23	Washer - Flat	4
35	32128-25	Nut - Flange Lock	4
36	56-4020	Screw - Machine	4
37	56-4030	Washer - Lock	4
38	322-3	Screw - Cap Hex. Hd.	4
39	56-3990	Screw - Machine	2
40	40-3790	Bottom Rail Assembly R.H.	1
41	2412-67	Clamp - R	1
*	76-2230	Seat Assembly (Incl. Ref. #1-3, 5, 7-31, 33, 36-37 & 39-40)	1

*Not Illustrated

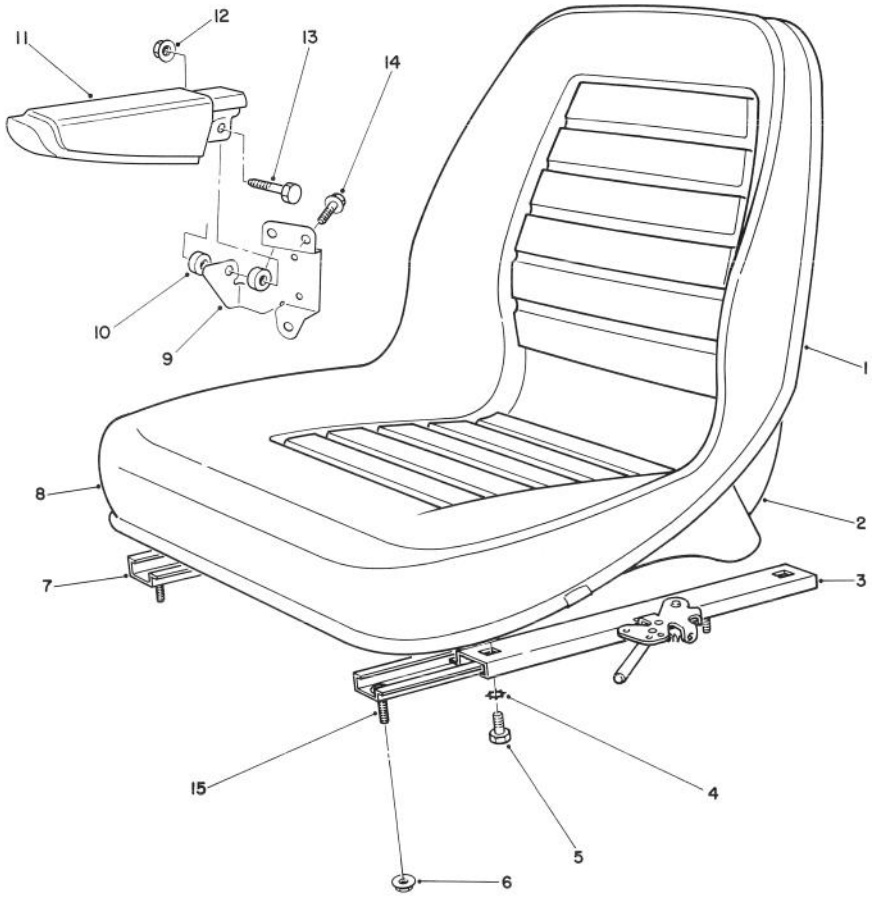

T-1070

SEAT ASSEMBLY MODEL NO. 30796 (Optional)

Ref. No.	Part No.	Description	No. Used
1		Trim	1
2		Shell	1
3	80-4260	Adjuster - L.H.	1
4	3255-8	Washer - Ext. Tooth Lock	4
5	322-2	Capscrew - Hex. Hd.	4
6	32128-25	Nut - Hex. Flange	4
7	80-4250	Adjuster - R.H.	1
8		Cushion	1
*	66-5400	Seat Assembly (Inc. Ref. #1, 2 & 8)	1

Ref. No.	Part No.	Description	No. Used
†9	69-0770	Bracket - Arm R.H.	1
	69-0760	Bracket - Arm L.H.	1
†10	69-1260	Spacer	4
†11	69-1180	Armrest	2
†12	32128-19	Nut - Flange	2
†13	323-9	Screw- Cap Hex. Hd.	2
†14	3234-23	Screw - Hex. Flange	6
15	3230-1	Bolt - Carriage	4

*Not Illustrated
†Optional item

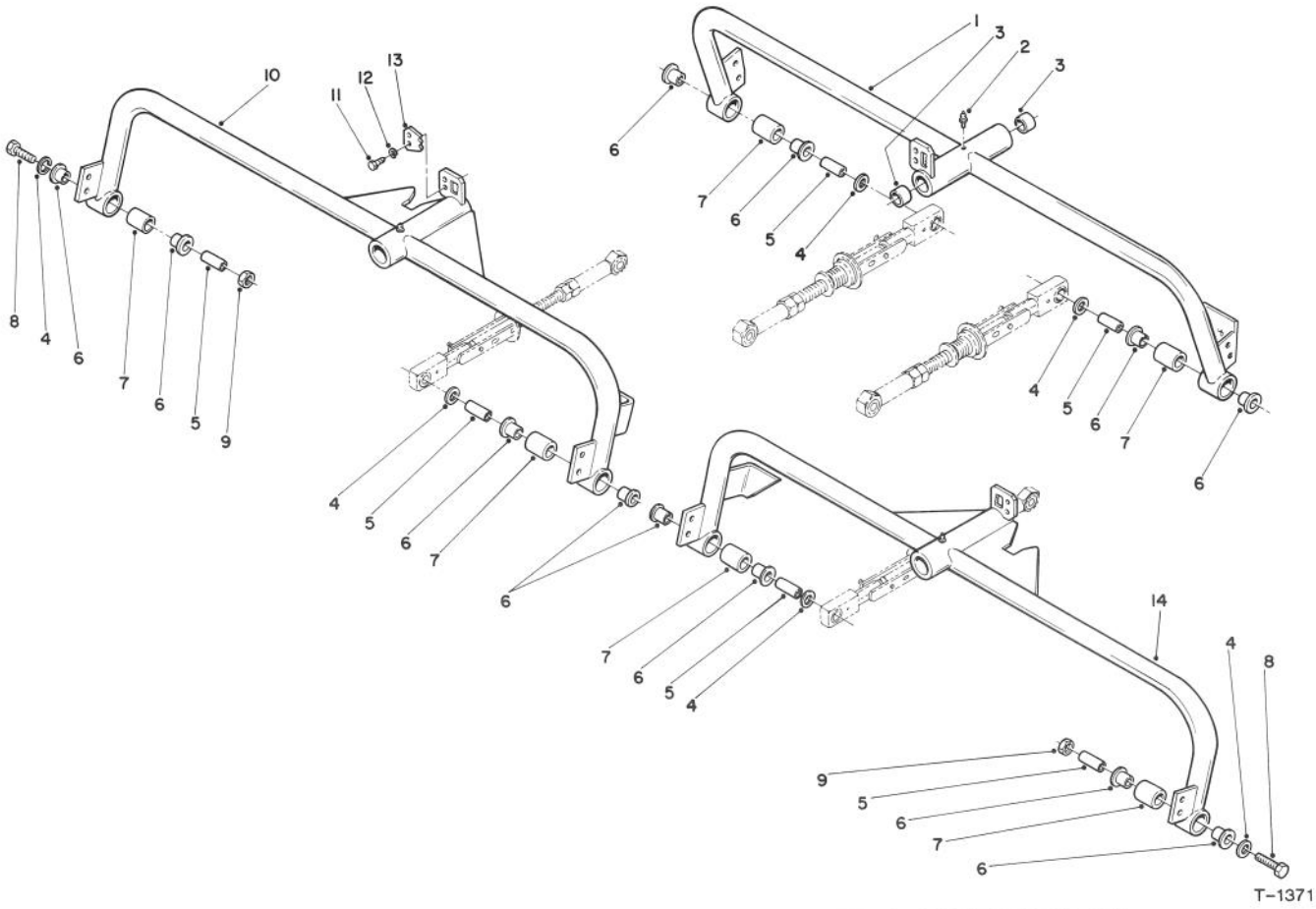

CUTTING UNIT CARRIER FRAME ASSEMBLY
(Floating Suspension For 8 & 11 Blade Cutting Units)

Ref. No.	Part No.	Description	No. Used
1	61-0870	Rear Carrier Frame Assy. (Incl. Ref. #2, 3 & 7)	1
2	302-5	Fitting - Grease	3
3	3-0348	Bushing	6
4	3256-26	Washer - Flat	6
5	61-1370	Spacer	6
6	256-285	Bushing - Flange	12
7	61-0710	Bushing Assembly	6
8	325-10	Screw - Cap Hex. Hd.	2
9	3296-59	Nut - Lock	2
10	61-0860	Right Carrier Frame Assy. (Incl. Ref. #2, 3 & 7)	1
11	321-2	Screw - Cap Hex. Hd.	6
12	3253-3	Washer - Lock	6
13	61-3600	Tab - Lift	3
14	61-0880	Left Carrier Frame Assy. (Incl. Ref. #2, 3 & 7)	1

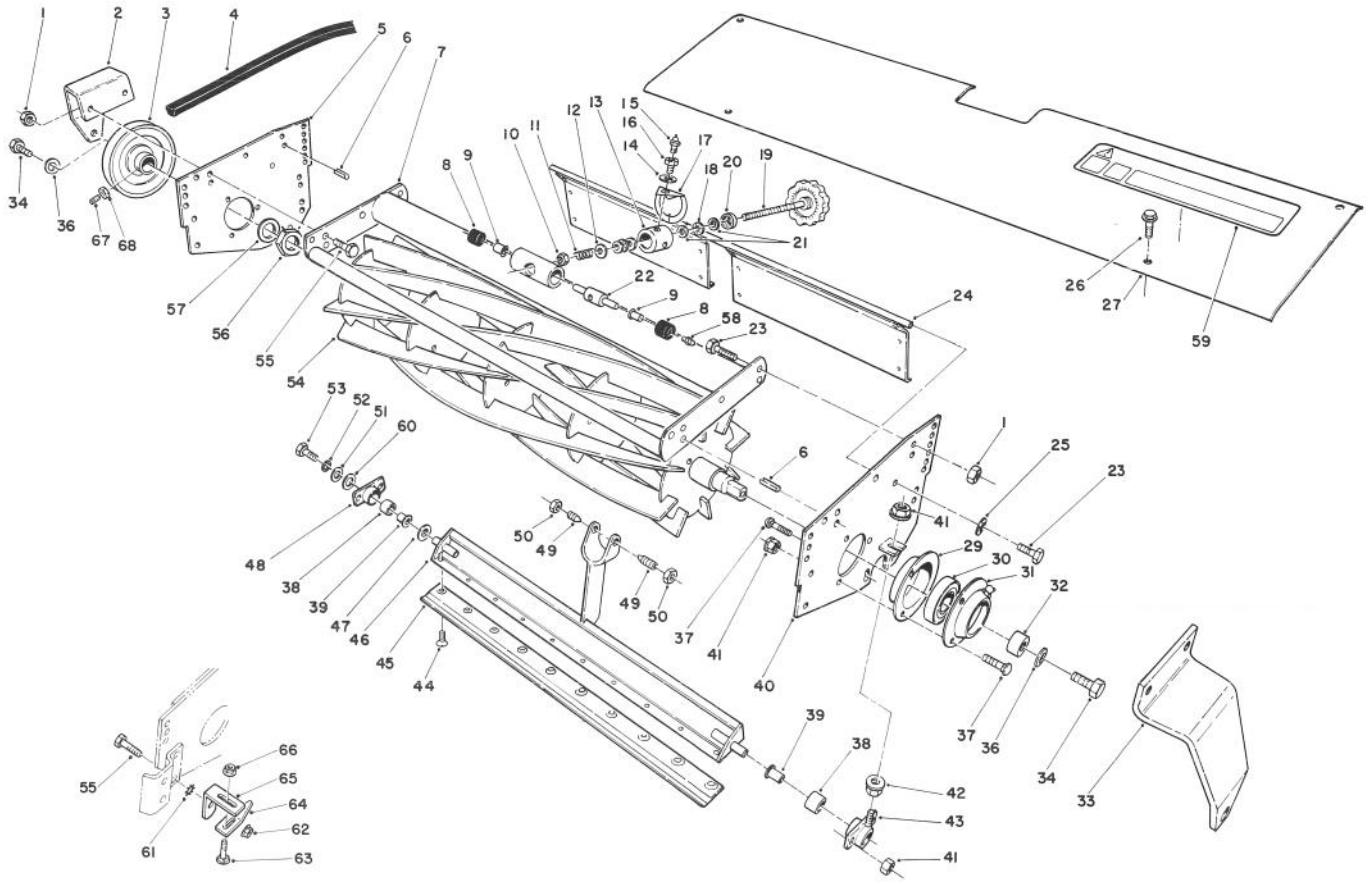

T-0285

8 & 11 BLADE CUTTING UNIT REEL ASSEMBLY

Ref. No.	Part No.	Description	No. Used
1	3296-39	Nut - Lock	8
2	61-0900	Bracket - Tensioner/Carrier (Use 2 Brackets on Rear Cutting Unit)	1
3	80-4270	Pulley - Reel	1
4	61-3380	V-Belt - Reel	1
5	61-1320	Sideplate	1
6	32121-36	Pin - Roll	4
7	61-0930	Frame - Reel	1
8	62-5510	Rubber Bushing Assembly	2
9	52-2890	Bushing - Flanged (Nylon)	2
10	3296-62	Nut - Lock	1
11	57-5270	Spring - Compression	1
12	29-8870	Washer	1
13	52-2980	Pivot - Single Point Adjust	1
14	3256-25	Washer - Flat	1
15	302-5	Fitting - Grease	1
16	52-2990	Capscrew - Spring Retainer	1
17	52-3000	Arm - Spring	1
18	257-6	Bearing - Thrust	2
19	61-1070	Handle - Assembly	1
20	253-84	Seal	1
21	257-5	Washer - Thrust	4
22	57-5260	Pin - S.P.A.	1
23	323-6	Screw - Cap Hex. Hd.	6
24	61-1130	Rear Grass Guard	1

Ref. No.	Part No.	Description	No. Used
25	3253-5	Washer - Lock	2
26	32144-10	Screw - Hex. Washer Hd.	4
27	61-0560	Shield - Top	1
29	76-2500	Flange - Bearing	2
30	251-331	Bearing	2
31	76-2490	Flange - Bearing (Lube)	2
*	302-11	Fitting - Grease	2
32	61-0500	Spacer - Reel	1
33	61-0890	Bracket - Carrier	1
34	3211-4	Screw - Cap Hex. Hd.	2
36	67-9760	Washer	2
37	3230-20	Bolt - Carriage	10
38	56-9510	Bushing Assy.	2
39	56-9520	Bushing - Flanged	2
40	61-0940	Sideplate - Adjust	1
41	3296-29	Nut - Lock	11
42	3217-6	Nut	1
43	61-0970	Housing - Bedbar Adj.	1
44	57-4910	Screw - Special	10
45	62-5180	Bedknife - 7 In. Reel	1
46	61-1210	Bedbar	1
47	61-1950	Washer - Bedbar	1
48	61-1010	Bedbar Housing	1
49	57-5190	Screw - Adjustment	2
50	3218-18	Nut - Jam	2
51	3256-56	Washer - Flat	1

NOTE: Front Left Cutting Unit Shown
*Not Illustrated

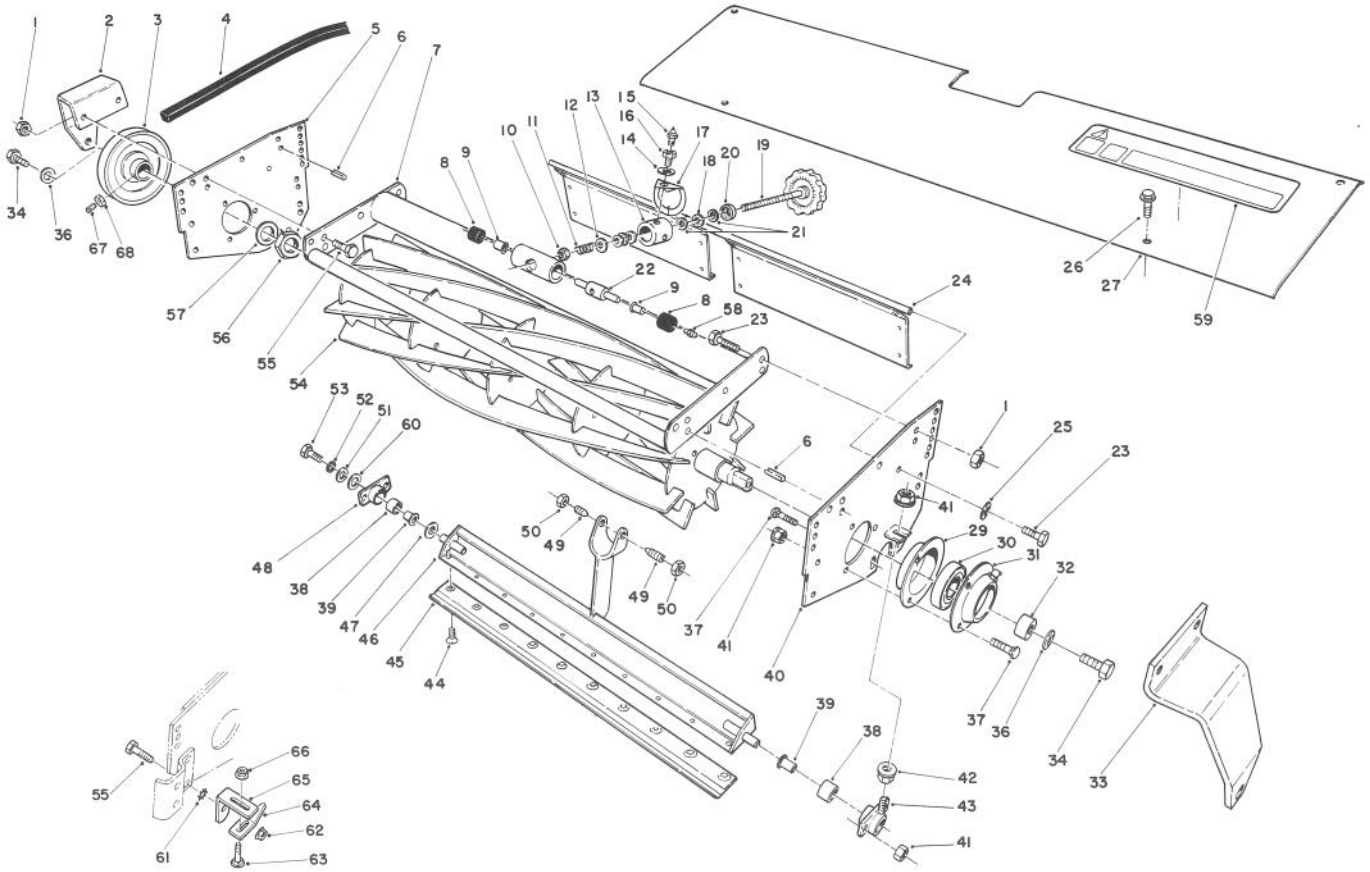

T–0285

8 & 11 BLADE CUTTING UNIT ASSEMBLY (Continued)

Ref. No.	Part No.	Description	No. Used
52	3253–4	Washer – Lock	1
53	322–3	Screw – Cap Hex. Hd.	1
54	12–7099	Reel Assembly – 8 Blade (Left C.U.)	1
*	12–7089	Reel Assembly – 8 Blade (Right & Center C.U.)	1
*	13–1709	Reel Assembly – 11 Blade (Left C.U.)	1
*	13–1699	Reel Assembly – 11 Blade (Right & Center C.U.)	1
55	323–7	Screw – Cap Hex. Hd.	5
56	67–5840	Nut – Jam	1
57	27–1850	Washer	1
58	302–18	Fitting – Grease	1

Ref. No.	Part No.	Description	No. Used
‡59	62–5070	Decal – Warning	1
60	62–7120	Spacer	1
61	3255–2	Washer – Lock E.T.L.W.	1
62	32128–21	Nut – Flange Lock	1
63	3229–11	Bolt – Carriage	1
64	76–2430	Bracket – Debris Cleaner	1
65	76–2440	Support – Debris Cleaner	1
66	32128–10	Nut – Flange Lock	1
67	3243–6	Screw – Set Sq. Hd.	1
68	3218–3	Nut – Jam	1
*	13–3649	Overhaul Kit (Incl. Ref. #8, 9, 18, 20, 30, 38, 39 & 44)	1

NOTE: Front Left Cutting Unit Shown
*Not Illustrated ‡For different language versions of this part, see International Decal Cross Reference.

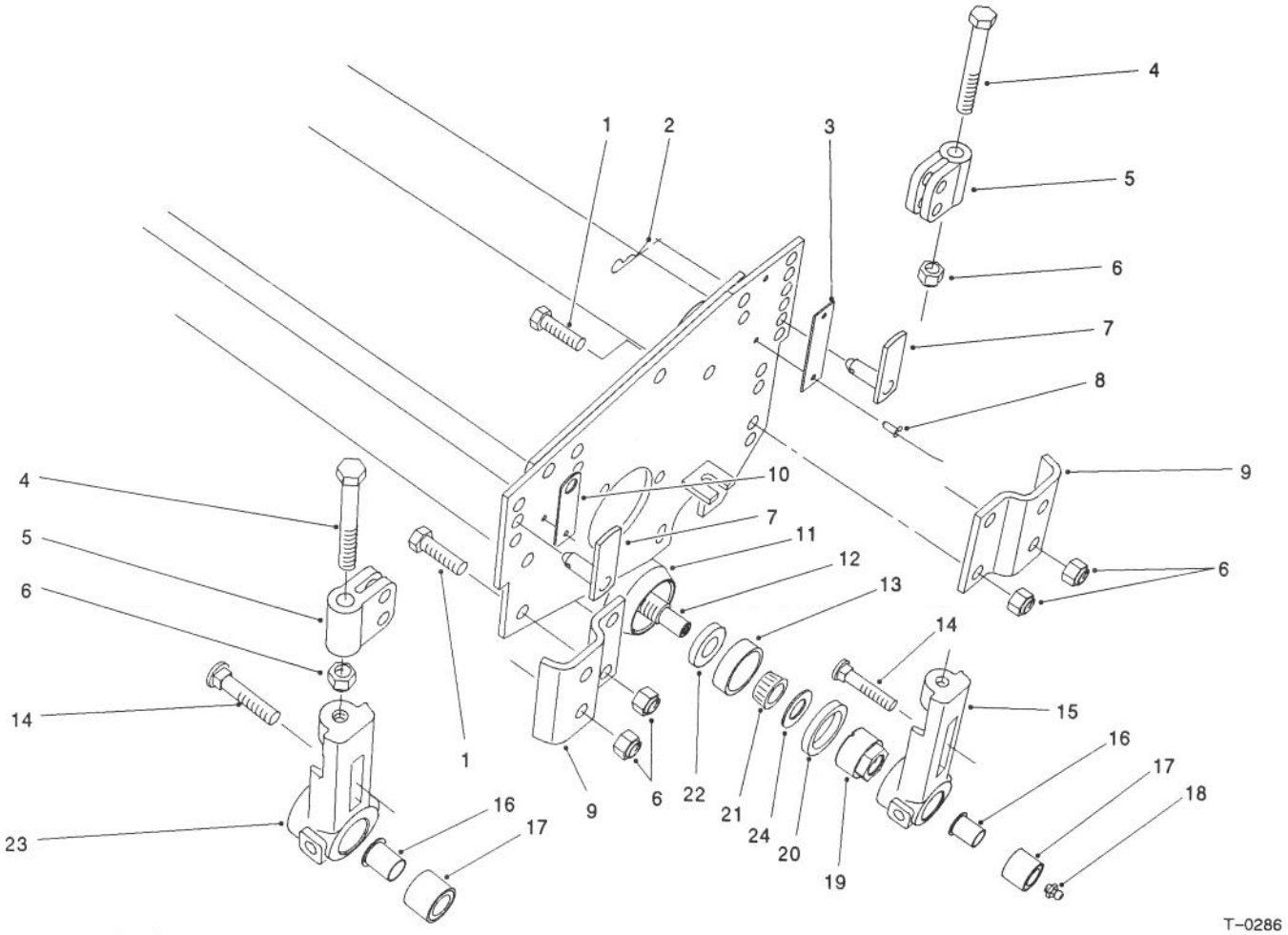

8 & 11 BLADE CUTTING UNIT ROLLER ASSEMBLY (Floating Suspension)

Ref. No.	Part No.	Description	No. Used
1	323-6	Screw - Cap Hex Hd.	8
2	3290-467	Cotter - Hairpin	4
3	61-3800	Plate - HOC Rear	2
4	61-0790	Screw - Cap Hex Hd.	4
5	61-0420	Support - HOC	4
6	3296-39	Nut - Lock	16
7	71-3690	Pin - HOC	4
8	3290-55	Rivet - Pop	6
9	61-0910	Bracket - Angle	4
10	61-3790	Plate - HOC Front	2
11	61-0380	Cap - Roller	2
12	61-0400	Shaft - Roller	1
13	254-79	Cup - Bearing	2
14	3231-2	Bolt - Carriage	4

Ref. No.	Part No.	Description	No. Used
15	61-0430	Bracket - Rear	2
16	56-9520	Bushing - Flanged	2
17	56-9510	Bushing	4
18	302-5	Fitting - Grease	2
19	71-3590	Nut - Adjustment	2
20	253-153	Seal - Outer	2
21	254-78	Cone - Bearing	2
22	253-152	Seal - Inner	2
23	61-0440	Bracket - Front	2
24	62-7660	Washer - Shim (not used on all full roller assemblies)	2
*	61-0410	Full Roller Assembly (Incl. Ref. #11-13, 18-22 & 24)	1

NOTE: Front Left Cutting Unit Shown
*Not Illustrated

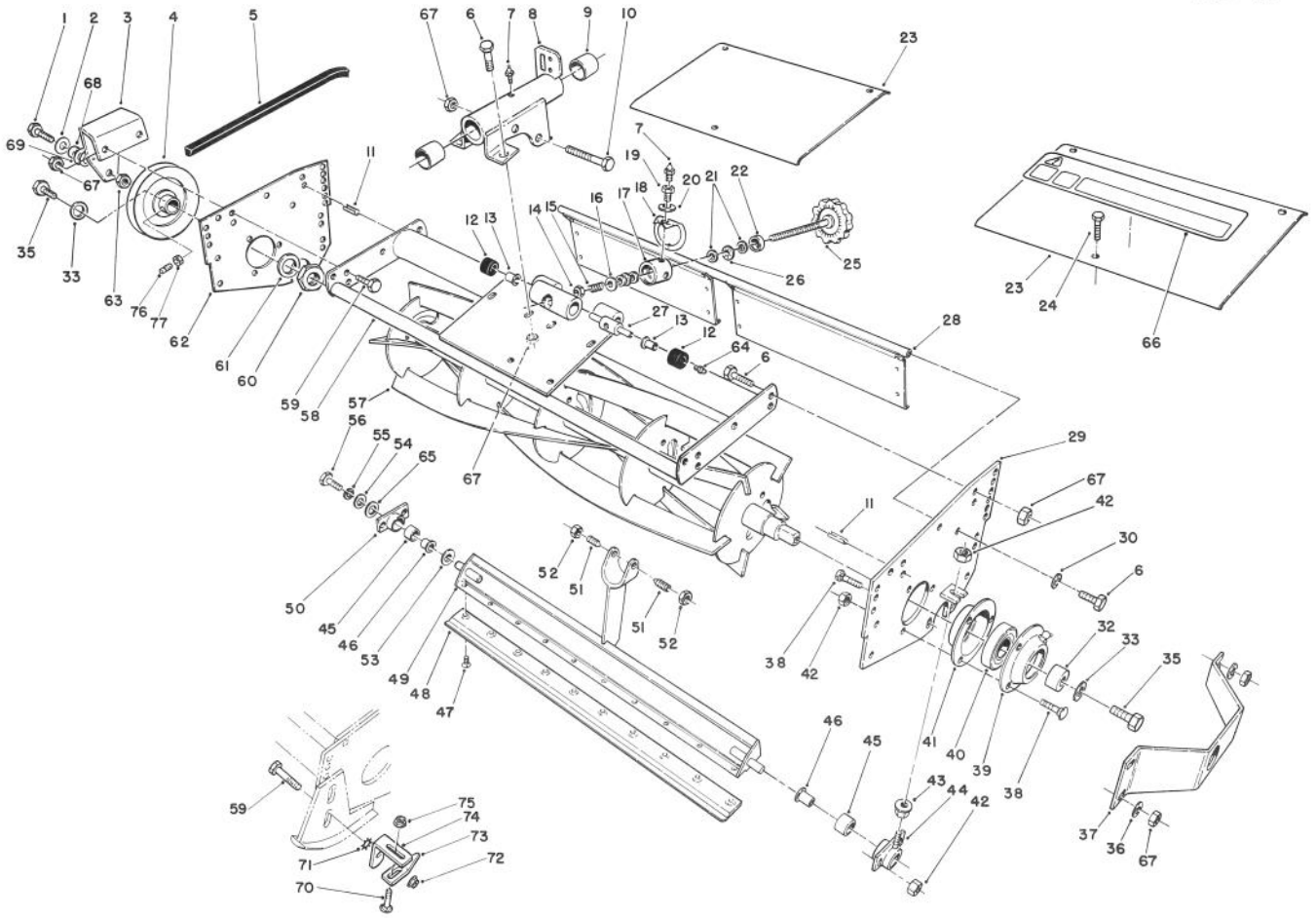

T–0283

5 BLADE CUTTING UNIT REEL ASSEMBLY (Fixed Suspension)

Ref. No.	Part No.	Description	No. Used
1	323–9	Screw – Cap Hex. Hd. (Use 2 capscrews on rear cutting unit)	1
2	3256–4	Washer – Flat (Use 2 washers on rear cutting unit)	1
3	61–0900	Bracket – Tensioner (Use 2 brackets on rear cutting unit)	1
4	80–4280	Pulley – Reel, 5 Blade	1
5	61–3380	V–Belt	1
6	323–6	Screw – Cap Hex. Hd.	8
7	302–5	Fitting – Grease	2
8	61–1050	Front Support – L.H. (Incl. Ref. #7 & 9)	1
*	61–3660	Front Support – R.H. (Incl. Ref. #7 & 9)	1
*	61–0670	Rear Support (Incl. Ref. #7 & 9)	1
9	3–0348	Bushing	2
10	323–12	Screw – Cap Hex. Hd.	1
11	32121–36	Pin–Roll	4
12	62–5510	Rubber Bushing Assembly	2
13	52–2890	Bushing – Flanged Nylon	2
14	3296–62	Nut – Lock	1
15	57–5270	Spring – Compression	1
16	29–8870	Washer – Flat	1
17	52–2980	Pivot – Single Point Adjust	1
18	52–3000	Arm – Spring	1
19	52–2990	Capscrew – Spring Retainer	1
20	3256–25	Washer – Flat	1
21	257–5	Washer – Thrust	4
22	253–84	Seal	1
23	61–0550	Shield – Top	2
24	32144–10	Screw – Cap Hex. Hd.	6
25	61–1070	Handle – Assembly	1
26	257–6	Bearing – Thrust	2
27	57–5260	Pin – S.P.A.	1
28	61–1130	Rear Grass Guard	1
29	61–0940	Sideplate – Adjust	1
30	3253–5	Washer – Lock	2
32	61–0500	Spacer – Bearing	1
33	67–9760	Washer – Flat	2
35	3211–4	Screw– Cap Hex. Hd.	2
36	3256–3	Washer – Flat	5
37	61–0610	Guard – Side (Used on front units only)	1
38	3230–20	Bolt – Carriage	10
39	76–2490	Flange – Bearing (Lube)	2
*	302–11	Fitting – Grease	2
40	251–331	Bearing	2
41	76–2500	Flange – Bearing	2
42	3296–29	Nut – Lock	11
43	3217–6	Nut	1

NOTE: Front Left Cutting Unit Shown
*Not Illustrated

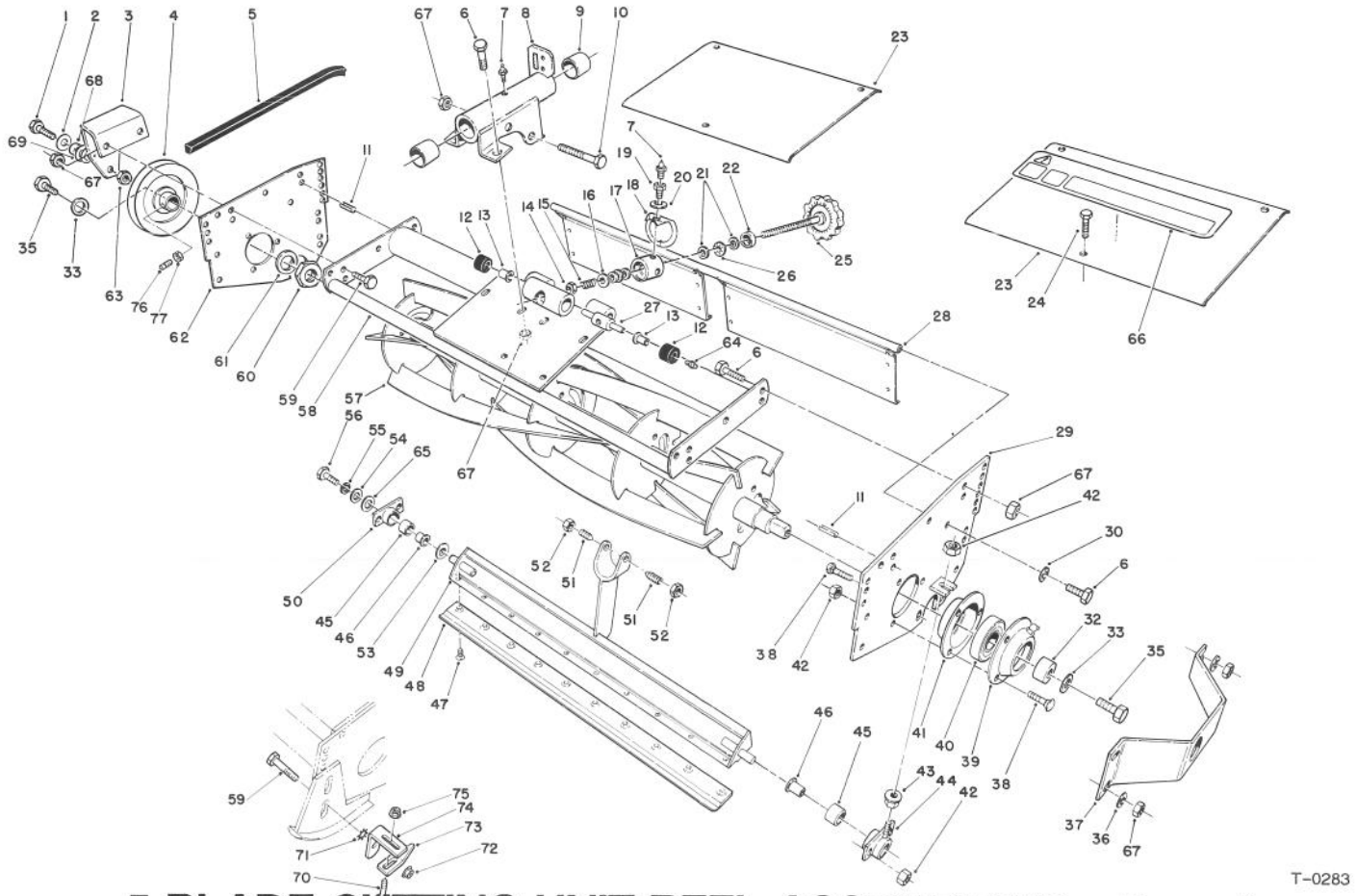

5 BLADE CUTTING UNIT REEL ASSEMBLY(Continued) (Fixed Suspension)

Ref. No.	Part No.	Description	No. Used
44	61-0970	Housing - Bedbar Adj.	1
45	56-9510	Bushing Assembly	2
46	56-9520	Bushing - Flanged	2
47	57-4910	Screw - Special	10
48	62-5180	Bedknife - 7 In. Reel	1
49	61-1210	Bedbar	1
50	61-1010	Bedbar Housing	1
51	57-5190	Screw - Adjustment	2
52	3218-18	Nut-Jam	2
53	61-1950	Washer-Bedbar	1
54	3256-56	Washer - Flat	1
55	3253-4	Washer-Lock	1
56	322-3	Screw - Cap Hex. Hd.	1
57	12-7079	Reel Assy. - 5 Blade (Left C.U.)	1
*	12-7059	Reel Assy. - 5 Blade (Right & Rear C.U.)	1
58	61-0660	Reel Frame	1
59	323-7	Screw - Cap Hex. Hd. (Use 5 screws on rear cutting unit)	2
60	67-5840	Nut - Jam	1
61	27-1850	Washer	1
62	61-1320	Sideplate - Reel	1
63	3296-59	Nut - Lock (Use 2 nuts on rear C.U.)	1
64	302-18	Fitting - Grease	1

Ref. No.	Part No.	Description	No. Used
65	62-7120	Spacer	1
‡66	62-5070	Decal - Warning	1
67	3296-39	Nut - Lock (Use 14 nuts on rear unit)	12
68	76-2290	Spacer (Use 2 spacers on rear cutting unit)	1
69	3256-45	Washer Flat (Use 4 washers on rear cutting unit)	2
70	3229-11	Bolt - Carriage (Rear cutting unit)	1
71	3255-2	Washer - Lock E.T.L.W. (Rear cutting unit)	1
72	32128-21	Nut - Flange Lock (Rear cutting unit)	1
73	76-2430	Bracket - Debris Cleaner (Rear cutting unit)	1
74	76-2440	Support - Debris Cleaner (Rear cutting unit)	1
75	32128-10	Nut - Flange Lock (Rear cutting unit)	1
76	3243-6	Screw - Set Sq. Hd.	1
77	3218-3	Nut - Jam	1
*	13-3649	Overhaul Kit (Incl. Ref. #12, 13, 22, 26 40 & 45-47)	1

NOTE: Front Left Cutting Unit Shown

*Not Illustrated ‡For different language versions of this part, see International Decal Cross Reference.

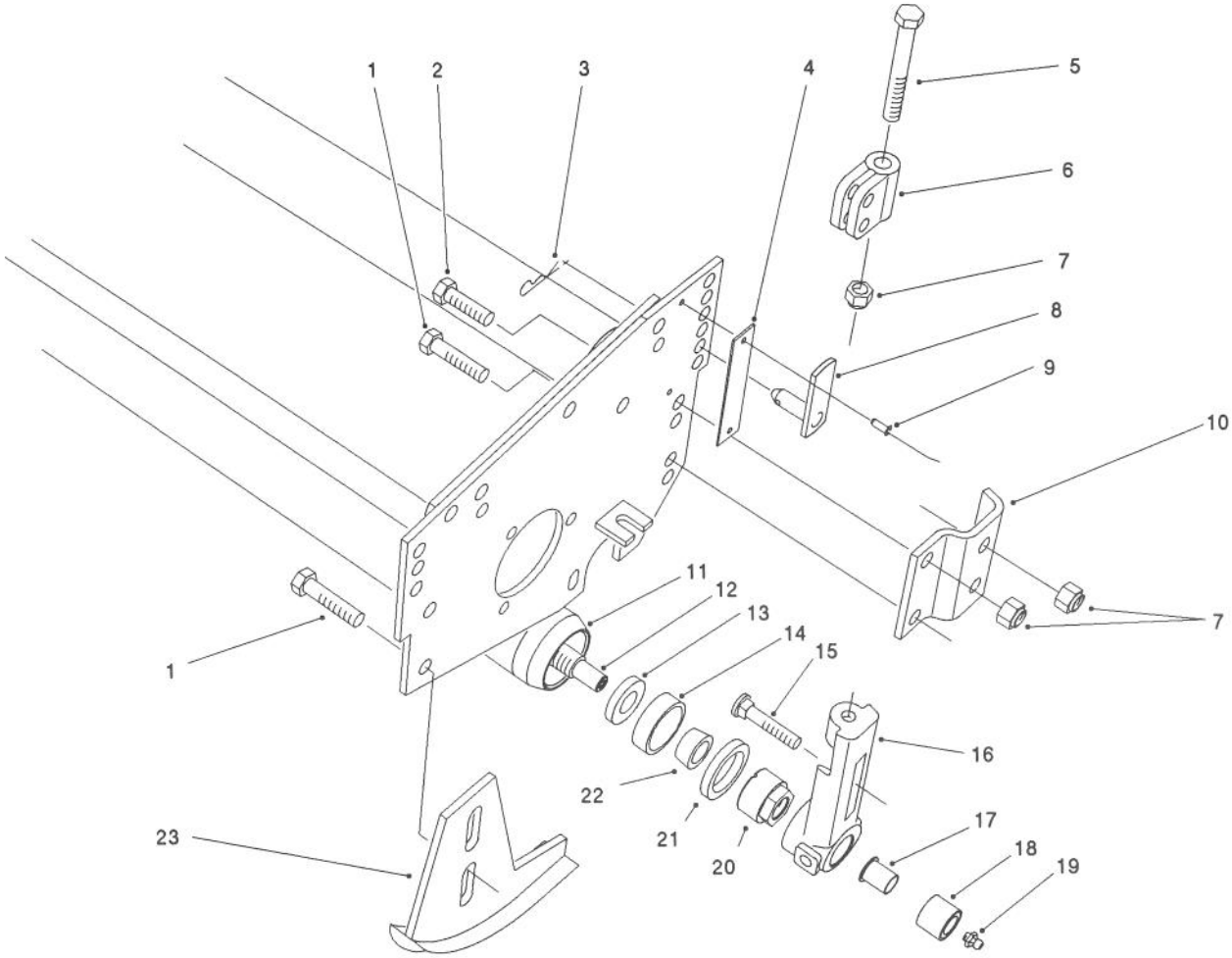

5 BLADE CUTTING UNIT ROLLER ASSEMBLY (Fixed Suspension)

Ref. No.	Part No.	Description	No. Used
1	323-7	Screw - Cap Hex. Hd.	3
2	323-6	Screw - Cap Hex. Hd.	5
3	3290-467	Cotter - Hairpin	2
4	61-3810	Plate - HOC	2
5	61-0790	Screw - Cap Hex. Hd.	2
6	61-0420	Support - HOC	2
7	3296-39	Nut - Lock	9
8	71-3690	Pin - HOC	2
9	3290-55	Rivet - Pop	4
10	61-0910	Bracket - Angle	2
11	61-0380	Cap - Roller	2
12	61-0400	Shaft - Roller	1
13	253-152	Seal - Inner	2

Ref. No.	Part No.	Description	No. Used
14	254-79	Cup - Bearing	2
15	3231-2	Bolt - Carriage	2
16	61-0430	Bracket - Rear	2
17	56-9520	Bushing - Flanged	1
18	56-9510	Bushing Assembly	2
19	302-5	Fitting - Grease	2
20	71-3590	Nut - Adjustment	2
21	253-153	Seal - Outer	2
22	254-78	Cone - Bearing	2
23	03446	Skid Kit (Incl. Ref. #1)	1
*	61-0410	Roller Assembly (Incl. Ref. #11-14,19-22)	1

NOTE: Front Left Cutting Unit Shown
*Not Illustrated

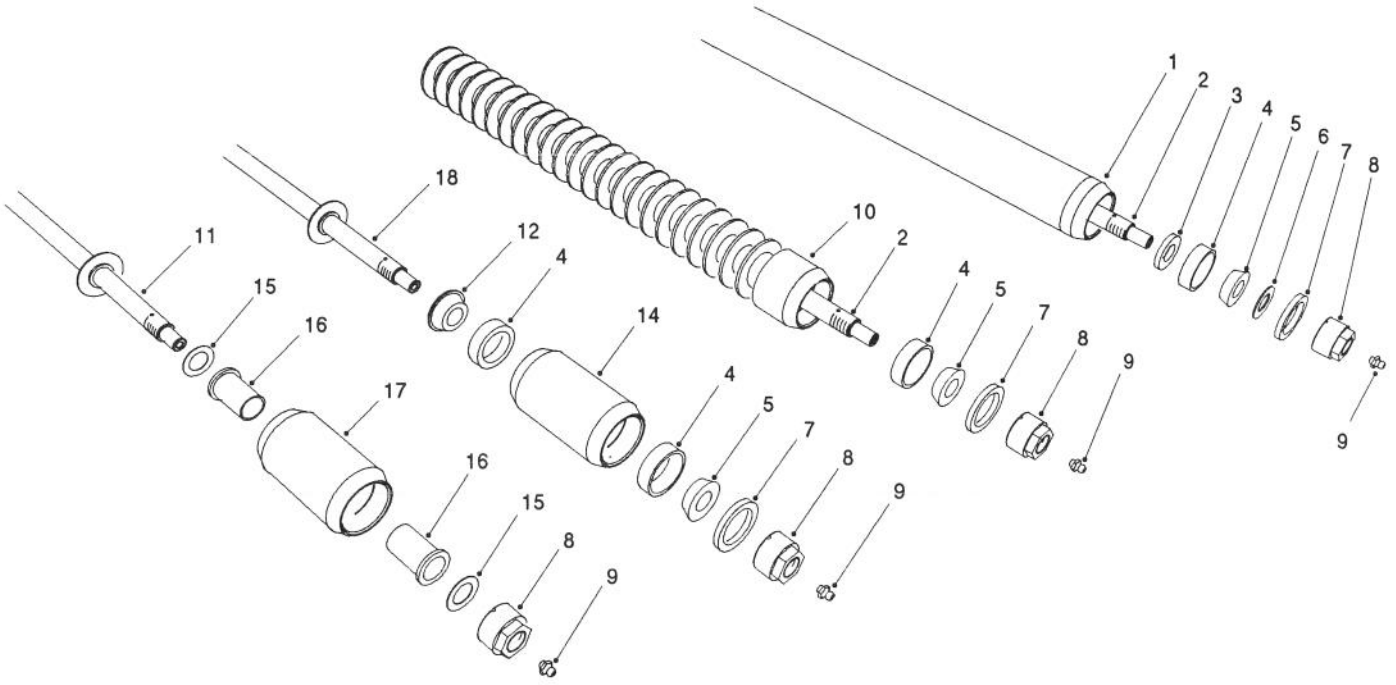

T-0287

CUTTING UNIT ROLLER OPTIONS

Ref. No.	Part No.	Description	No. Used
1	61-0380	Cap - Full Roller	2
2	61-0400	Shaft - Full/Wiehle Roller	2
3	253-152	Seal - Inner	2
4	254-79	Cup - Bearing (Outer)	8
5	254-78	Cone - Bearing (Outer)	6
6	62-7660	Washer - Shim (not used on all full roller assemblies)	2
7	253-153	Seal - Outer	6
8	71-3590	Nut - Adjustment	8
9	302-5	Fitting - Grease	8
10	82-2400	Wiehle Roller Weld Assy.	1
11	62-4990	Shaft - Anti-Scalp Roller	1
12	252-112	Cone - Bearing (Inner)	2
14	76-2400	Roller - Sectional	2
15	3-6498	Washer - Thrust	4
16	256-117	Bushing - Flanged	4
17	63-5060	Roller - Anti-Scalp	2

Ref. No.	Part No.	Description	No. Used
18	76-2380	Shaft - Sectional Roller	1
*	61-0410	Full Roller Assembly (Incl. Ref. #1 -9)	1
*	62-7410	Wiehle Roller Assembly (Incl. Ref. #2, 4-5 & 7-10)	1
*	62-4970	Sectional Roller Assembly (Incl. Ref. #4-5, 7-9, 12, 14 & 18)	1
*	63-5090	Anti-Scalp Roller Assembly (Incl. Ref. #8-9, 11 & 15-17)	1
*	03440	Full Roller Kit (Incl. 3 No. 61-0410)	1
*	03450	Wiehle Roller Kit (Incl. 3 No. 62-7410)	1
*	03445	Sectional Roller Kit (Incl. 3 No. 62-4970)	1
*	03447	Anti-Scalp Roller Kit (Incl. 3 No. 63-5090)	1

*Not Illustrated

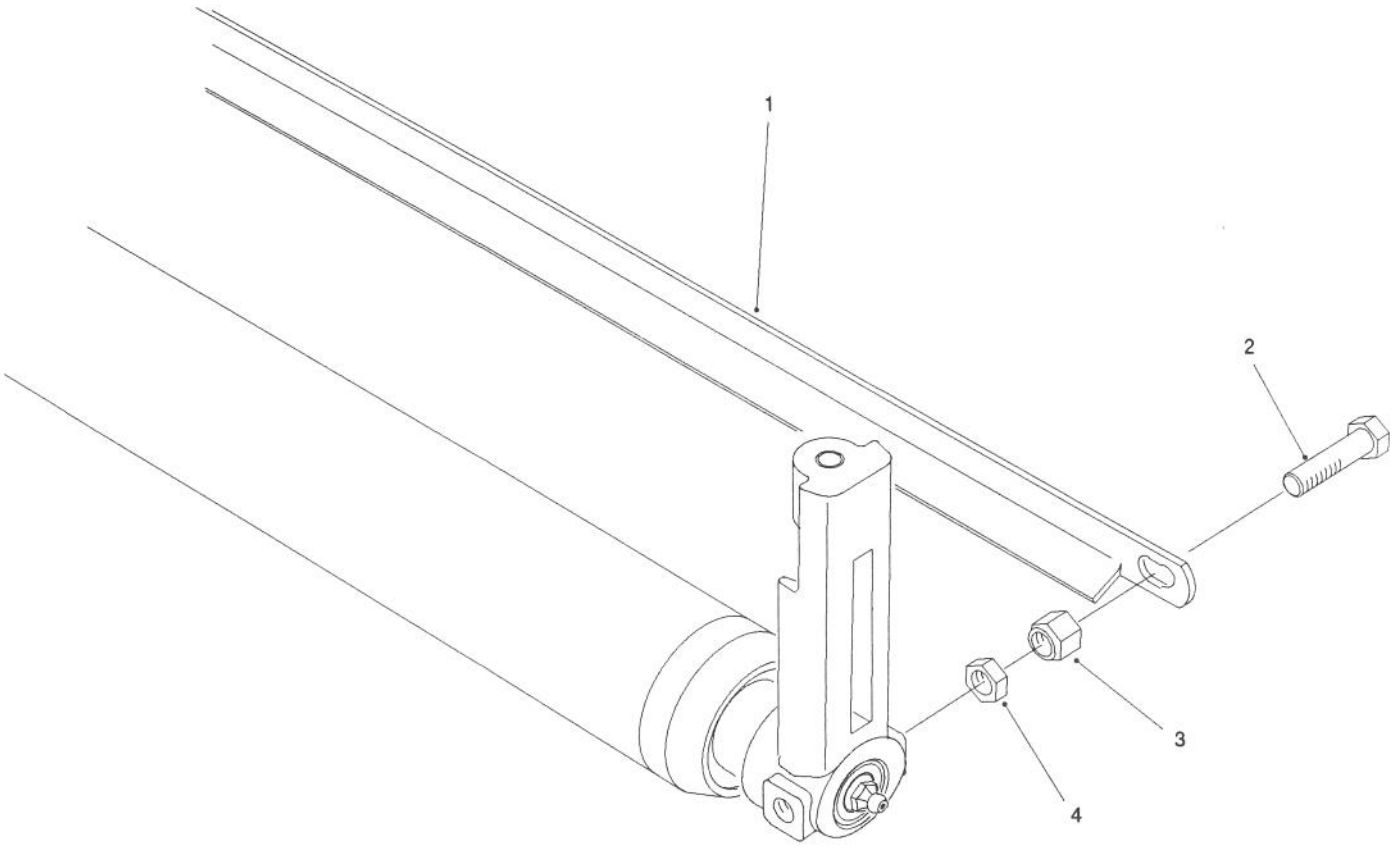

T-0288

CUTTING UNIT ROLLER SCRAPER KIT NO. 60–9560 (Optional)

Ref. No.	Part No.	Description	No. Used
1	61–0590	Scraper – Roller	3
2	323–7	Screw – Cap Hex. Hd.	6

Ref. No.	Part No.	Description	No. Used
3	3296–59	Nut – Lock	6
4	3218–3	Nut – Jam	6

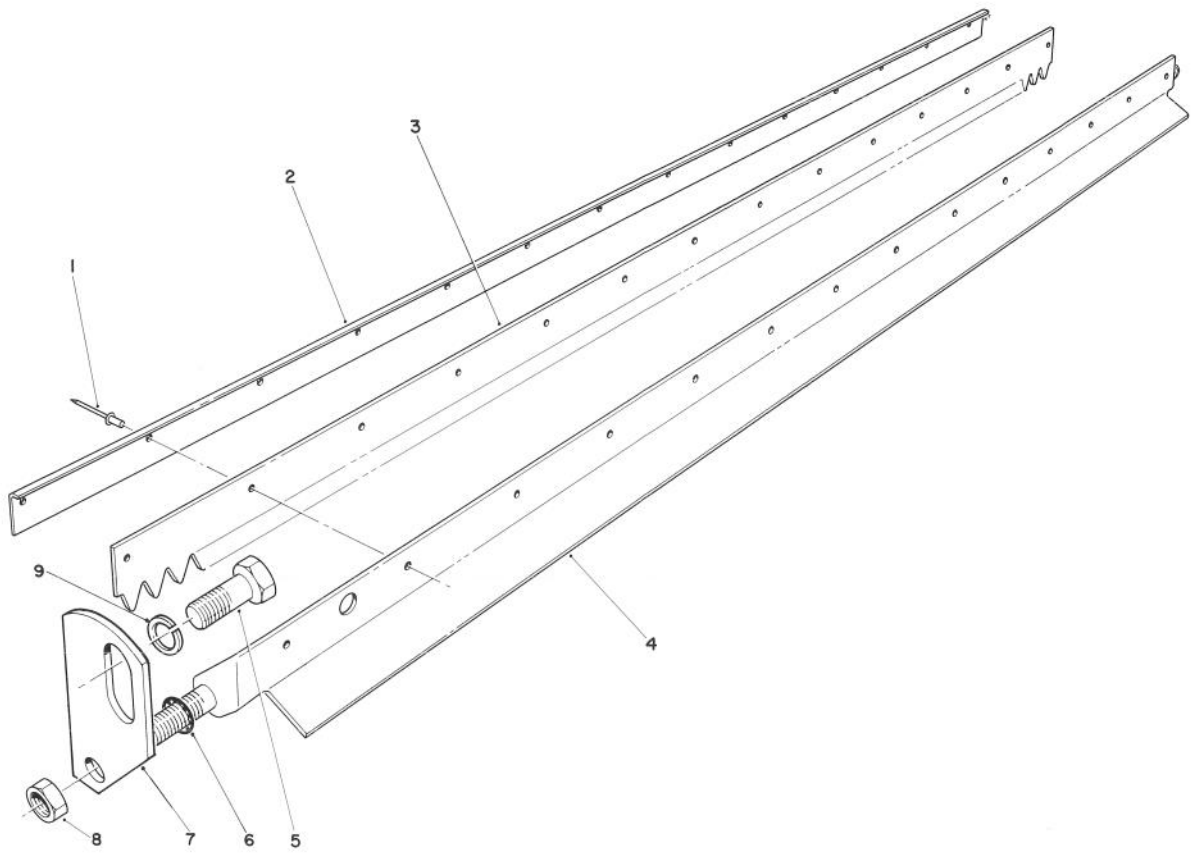

T-1036

COMB KIT PART NO. 67-9400 (Optional)

Ref. No.	Part No.	Description	No. Used
1	3296-13	Rivet - Pop	14
2	67-9450	Support - Comb	1
3	67-9470	Comb	1
4	67-9430	Plate - Comb	1
5	323-7	Screw - Cap Hex. Hd.	2

Ref. No.	Part No.	Description	No. Used
6	3254-18	Washer - Lock I.T.L.W.	6
7	80-4690	Support - Scraper	2
8	3296-39	Nut - Lock	2
9	3256-35	Washer	6

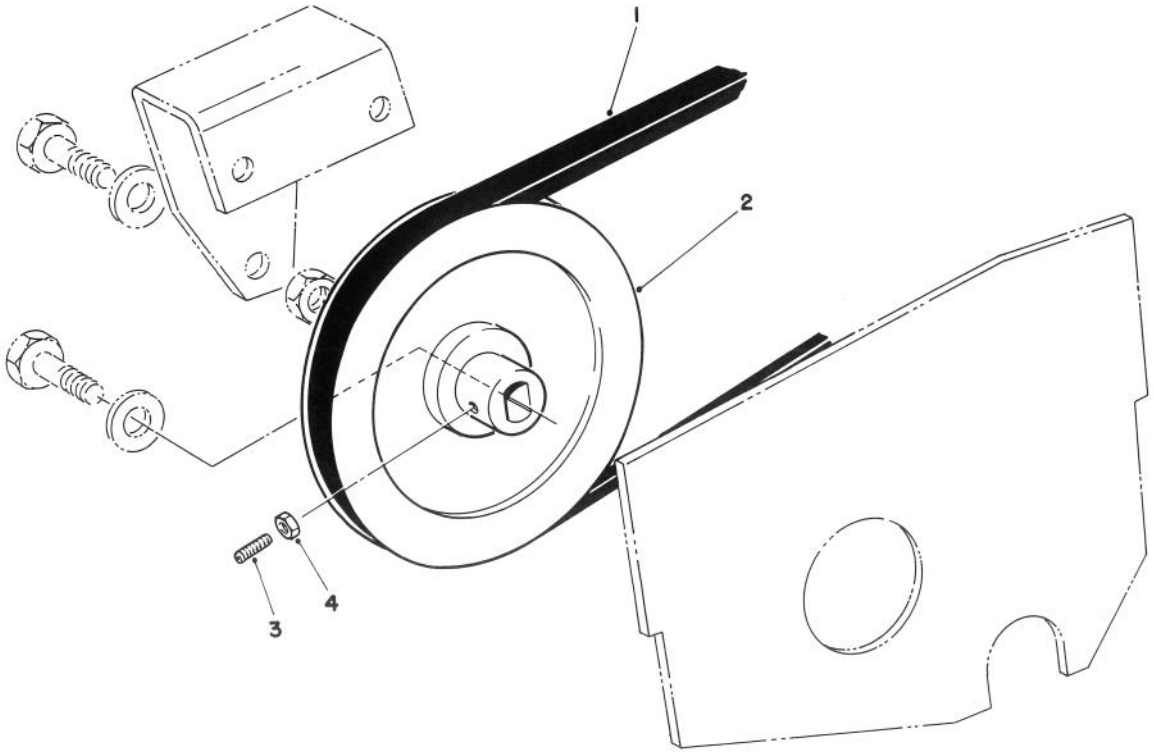

T-0930

LARGE PULLEY KIT NO. 67-9540 (Optional)

Ref. No.	Part No.	Description	No. Used
1	80-4290	Pulley - Reel	3
2	72-4770	Belt - V	3

Ref. No.	Part No.	Description	No. Used
3	3247-6	Screw - Set	3
4	3218-3	Nut - Jam	3

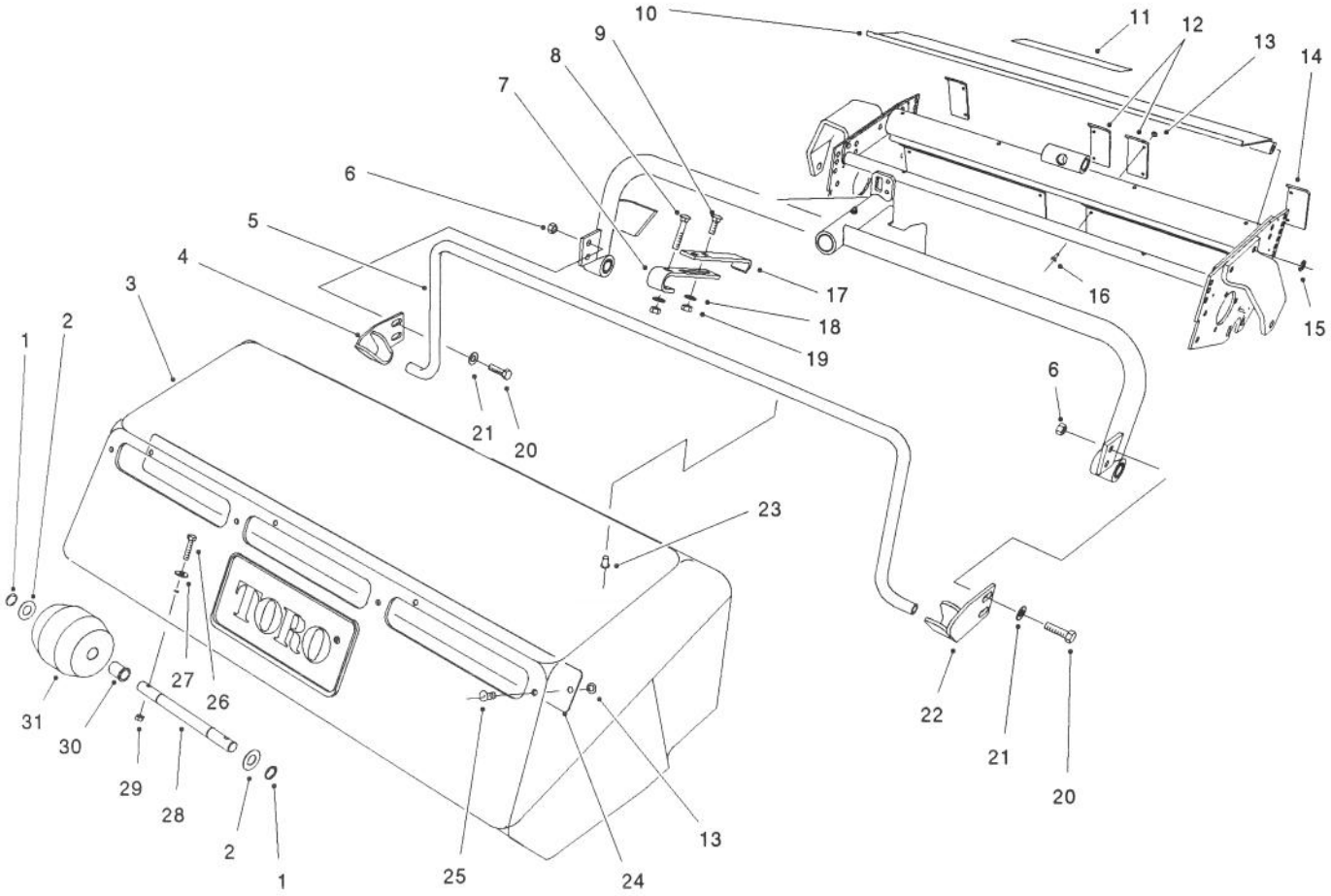

T-0289

GRASS COLLECTION SYSTEM MODEL NO. 03433 (Optional)
(Front Cutting Unit Basket Assembly)

Ref. No.	Part No.	Description	No. Used
1	32120-64	Ring - Snap	8
2	3-9274	Spacer - Wheel	8
3	61-1330	Front Grass Basket Assy. (Incl. Ref. #1, 2, 5, 7-9, 13, 17-19 & 23-31)	2
4	61-1280	Bracket - Basket R.H.	2
5	61-1190	Support - Basket (Front)	2
6	3296-39	Nut - Lock	8
7	61-3160	Hanger - Basket (Front)	2
8	3230-5	Bolt - Carriage	2
9	3230-2	Bolt - Carriage	4
10	61-0750	Defector - Grass	2
11	62-5070	Decal - Warning	2
12	61-3290	Cover - Middle	4
13	3256-49	Washer - Flat	32
14	61-3280	Cover - End	4
15	3253-21	Washer - Lock	4
16	3269-23	Rivet - Pop	24
17	62-7230	Hanger - Adjustable (Front)	2
18	3256-23	Washer - Flat	6
19	3296-29	Nut - Lock	6
20	323-7	Screw - Cap Hex. Hd.	8
21	3256-24	Washer - Flat	8
22	61-1270	Bracket - Basket L.H.	2
23	3269-18	Rivet - Pop	20
24	61-3170	Baffle - Grass	2
25	3269-22	Rivet - Pop	8
26	321-8	Screw - Cap Hex. Hd.	8
27	3256-2	Washer - Flat	8
28	5-2891	Shaft - Wheel	4
29	32153-4	Nut-Lock	8
30	256-90	Bushing - Flange	8
31	4-7439	Wheel Assembly (Incl. Ref. #30)	4

NOTE: Left Front Cutting Unit Shown

NOTE: Model No. 03433 Includes 2 Front and 1 Rear Basket Assembly.

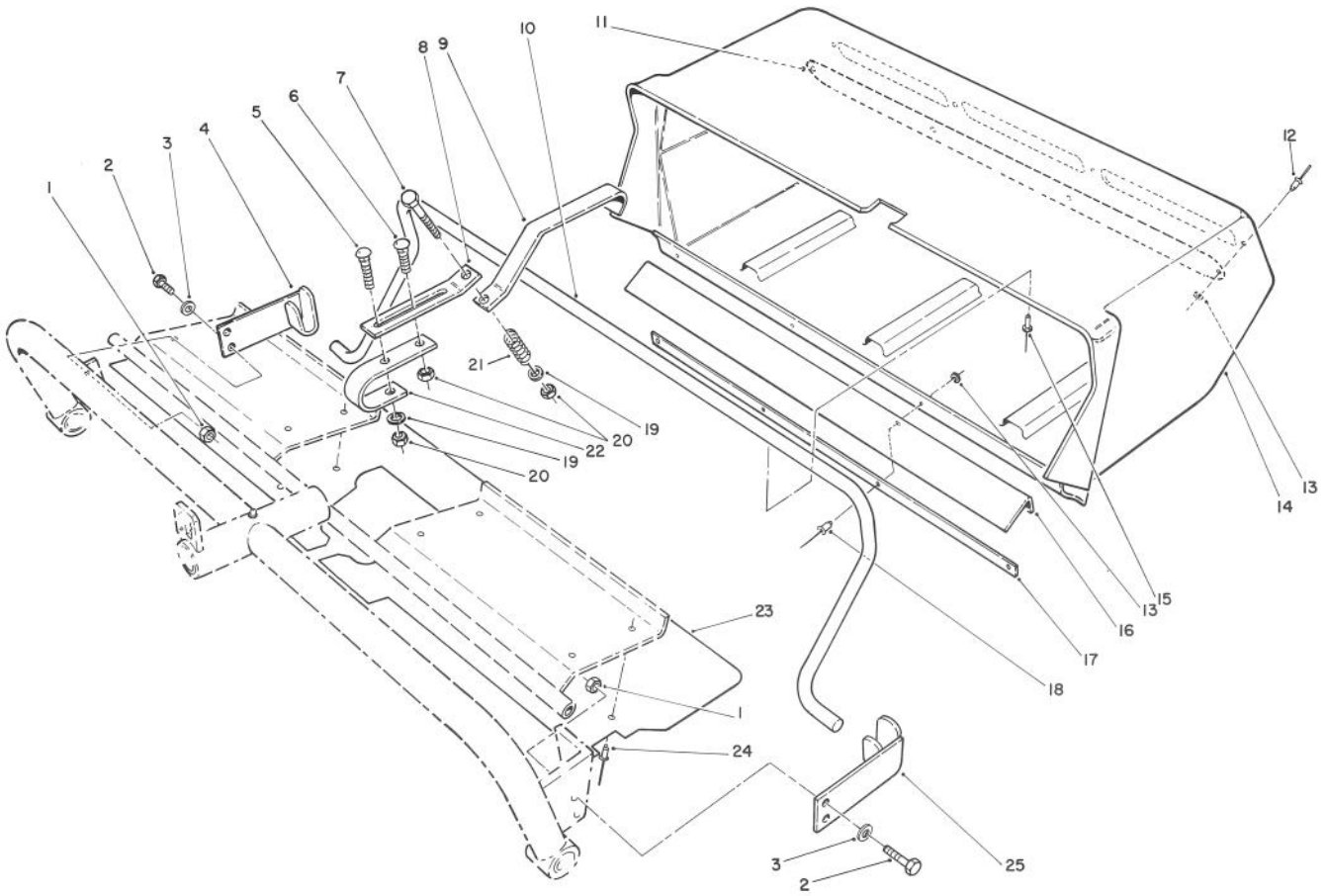

T-0290

GRASS COLLECTION SYSTEM MODEL NO. 03433 (Optional)
(Rear Cutting Unit Basket Assembly)

Ref. No.	Part No.	Description	No. Used
1	3296-39	Nut - Lock	3
2	323-7	Screw - Cap Hex. Hd.	4
3	3256-24	Washer - Flat	4
4	61-1260	Bracket - Basket R.H.	1
5	3230-8	Bolt - Carriage	1
6	3230-2	Bolt - Carriage	1
7	322-7	Screw - Cap Hex. Hd.	1
8	67-5910	Plate - Rear	1
9	67-5890	Hanger - Basket Rear	1
10	67-5920	Support - Basket Rear	1
11	61-3170	Baffle - Grass	1
12	3269-22	Rivet - Pop	4
13	3256-49	Washer	8

Ref. No.	Part No.	Description	No. Used
14	61-1340	Rear Grass Basket Assy. (Incl. Ref. #10-13 & 15-18)	1
15	3269-18	Rivet - Pop	10
16	62-5130	Flap - Rubber	1
17	63-8740	Strap - Basket	1
18	3290-282	Rivet - Pop	10
19	3256-23	Washer - Flat	2
20	3296-29	Nut - Lock	3
21	63-4220	Spring - Compression	1
22	62-7480	Bracket - Hanger	1
23	67-5800	Flap - Basket Rear	1
24	3269-23	Rivet - Pop	8
25	61-1250	Bracket - Basket L.H.	1

NOTE: Model No. 03433 Includes 2 Front and 1 Rear Basket Assembly.

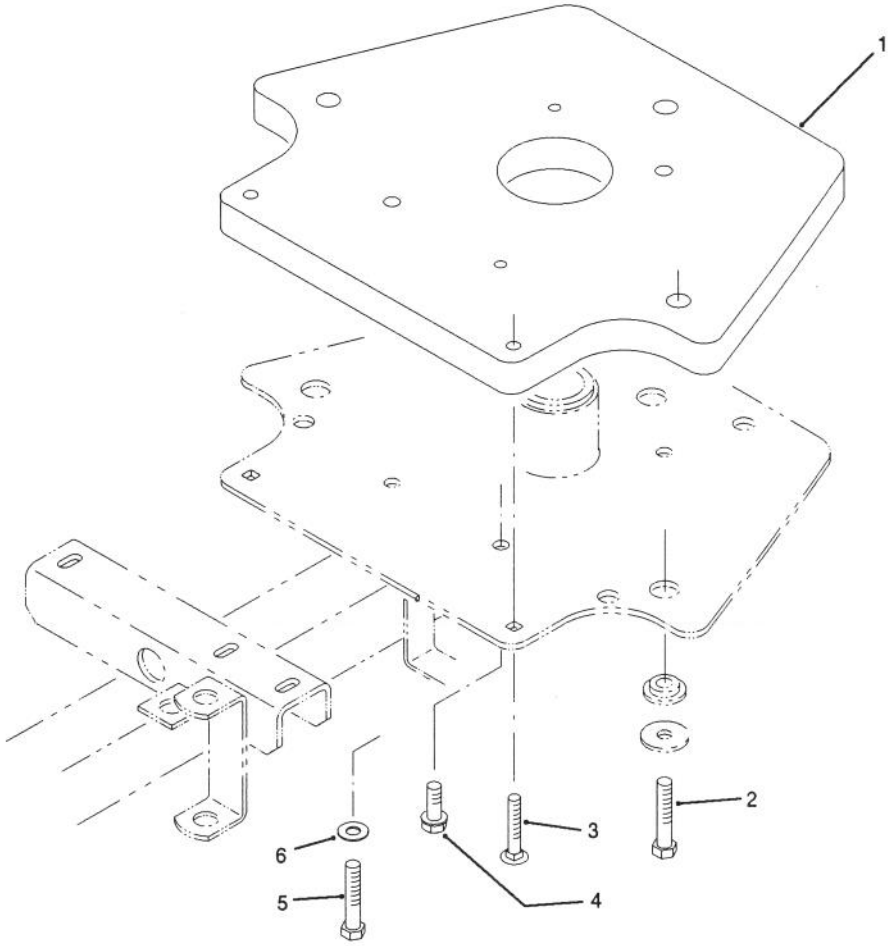

T-1372

WEIGHT KIT NO. 83-9370

Ref. No.	Part No.	Description	No. Used
1	83-9390	Weight	1
2	323-10	Screw - Cap Hex. Hd.	3
*†	232-14	Screw - Cap Hex. Hd.	3
3	3230-5	Screw - Carriage	2
*†	3230-9	Screw - Carriage	2

Ref. No.	Part No.	Description	No. Used
4	3234-11	Screw - Hex. Washer Hd.	2
†5	323-10	Screw - Cap Hex. Hd.	2
†6	3256-24	Washer - Flat	2

*Not Illustrated
†Required when installing 2 weights.

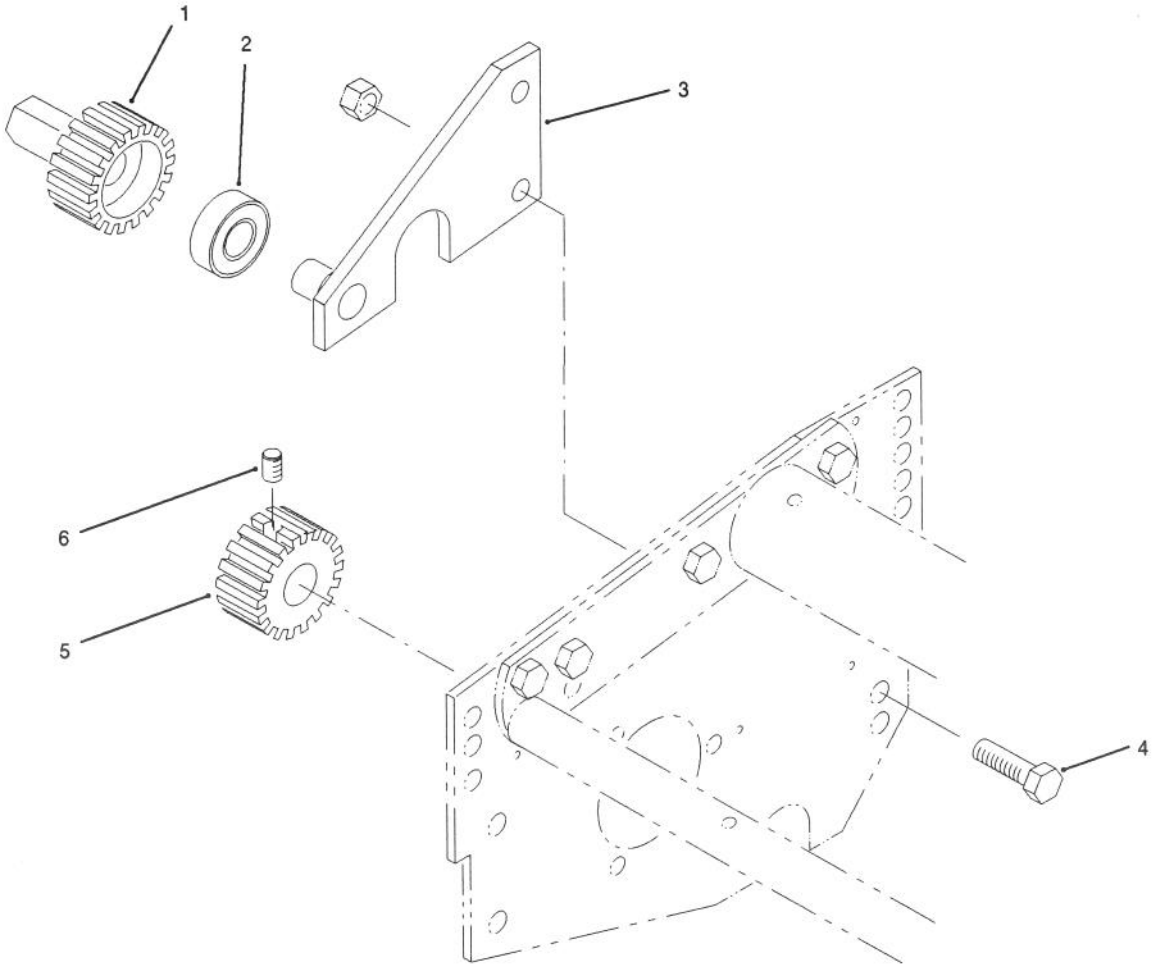

T-1372

BACKLAP KIT NO. 84-5510

Ref. No.	Part No.	Description	No. Used
1	84-5590	Gear - Driver	1
2	251-270	Bearing - Ball	1
3	84-5580	Plate - Attachment (L.H. Cutting Unit)	1
*	84-5570	Plate - Attachment (R.H. & Ctr. Cuttung Uint)	2

Ref. No.	Part No.	Description	No. Used
4	323-7	Screw - Cap Hex. Hd.	6
5	84-5560	Gear - Reel Shaft	3
6	3246-9	Screw - Set	6

*Not Illustrated

SPECIAL TOOLS

DRIVE MOTOR SEAL INSTALLATION TOOL NO. *19-2660

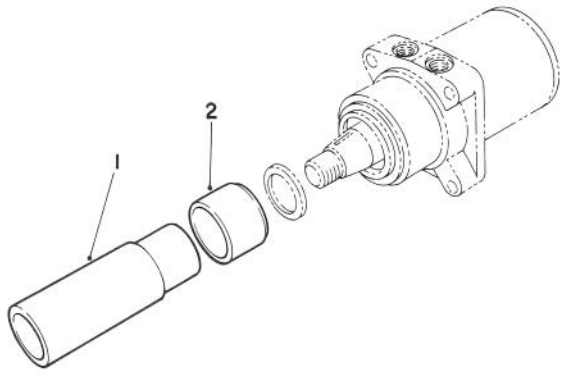

T-0728

Ref. No.	Part No.	Description	No. Used
1		Driver - Seal	1
2		Holder - Seal	1

BEDKNIFE SCREW TOOL NO. *TOR510880

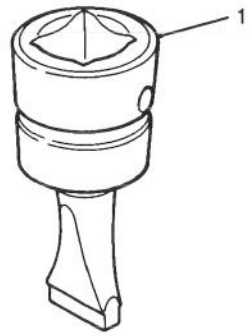

T-0729

Ref. No.	Part No.	Description	No. Used
1		Tool - Bedknife Screw	1

HYDRAULIC OIL RESERVOIR PLUG NO. *63-4310

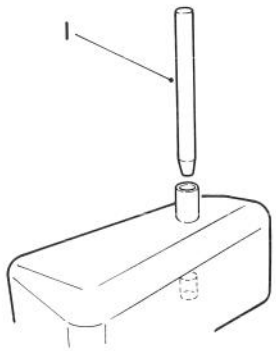

T-1213

Ref. No.	Part No.	Description	No. Used
1		Plug - Reservoir	1

BACKLAPPING BRUSH ASSEMBLY NO. *TOR299100

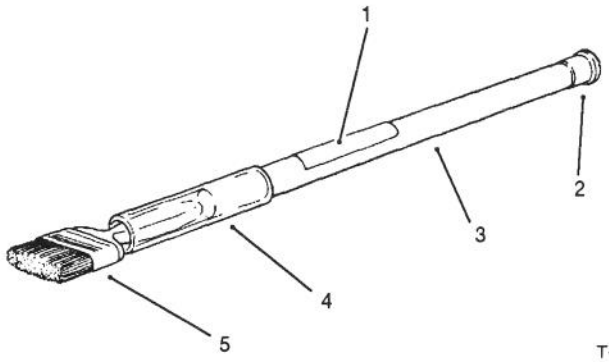

T-0731

Ref. No.	Part No.	Description	No. Used
1	12-9140	Decal	1
2	2410-18	Plug	1
3	29-9080	Handle	1
4	29-9090	Hose - Handle	1
5	36-4310	Brush	1

*Obtain these items directly from OTC 2013 4th St. Owatonna, MN. 55060 1-800-533-0492 (in Minnesota and Canada 1-507-455-7050) Fax. 507-455-7011.

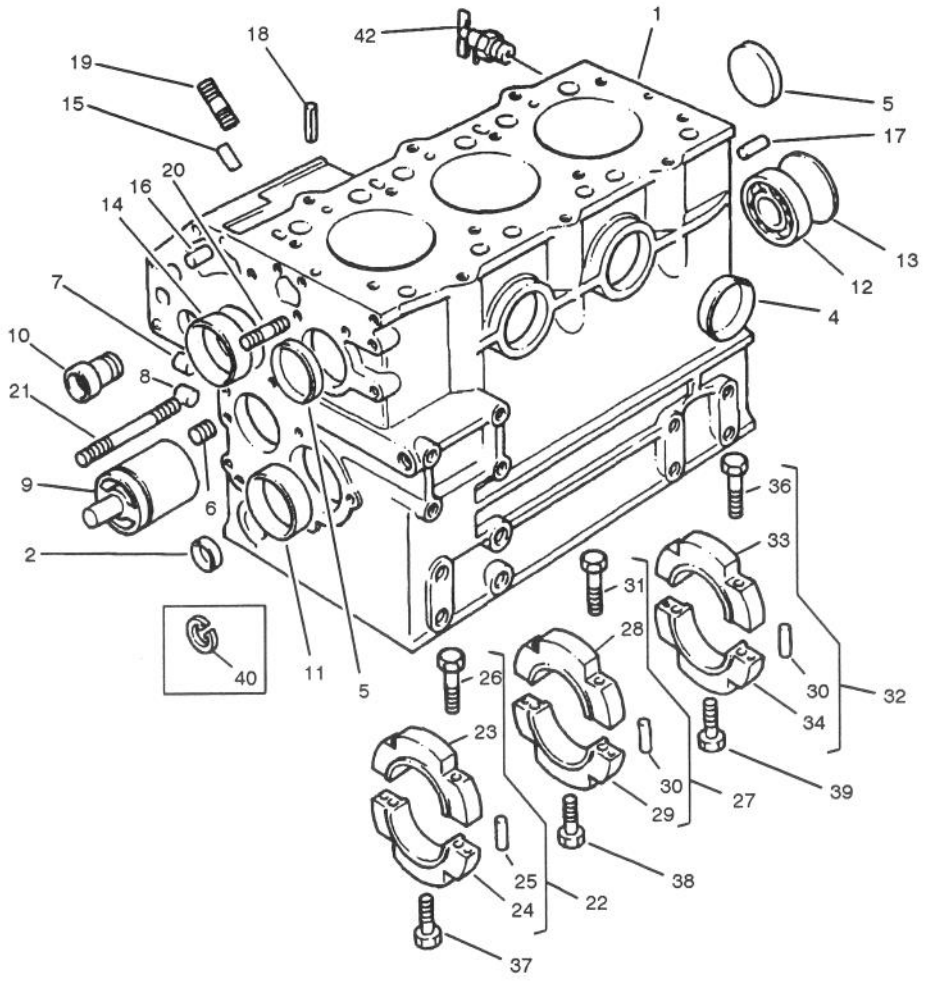

T–1377

CYLINDER BLOCK ASSEMBLY

Ref. No.	Part No.	Description	No. Used
1	110186030	Kit – Cylinder Block	1
2	064200015	Plug	1
4	064200040	Plug	2
5	064200040	Plug	2
6	198466050	Plug	3
7	198466010	Plug	4
8	198466070	Plug	2
9	165296160	Shaft	1
10	198517090	Bush	1
11	198517300	Bush	1
*	198517304	Bush –.25mm	1
*	198517307	Bush –.50mm	1
12	040106203	Bearing – Ball	1
13	064100045	Plug	1
14	042303015	Bush	1
15	030500512	Dowel	2
16	030500512	Dowel	2
17	030500820	Dowel	2
18	030309005	Pin	2
19	012100620	Stud	2
20	012100635	Stud	1
21	012100660	Stud	1
22	110156220	Holder Incl. Ref. #23 & 24)	1

Ref. No.	Part No.	Description	No. Used
23		Cap	1
24		Cap	1
25	030500612	Dowel	2
26	010810840	Screw	2
27	110156230	Holder Incl. Ref. #28 & 29)	1
28		Cap	1
29		Cap	1
30	030500612	Dowel	2
31	010810840	Screw	2
32	110156240	Holder Incl. Ref. #33 & 34)	1
33		Cap	1
34		Cap	1
36	010810840	Screw	2
37	011310850	Screw	1
38	011310850	Screw	1
39	010700845	Screw	2
40	036509005	Circlip	1
41	064200018	Plug	2
42	198736052	Cock	1
*	110006330	Short Block Assembly	1
*	195906610	Kit – Gasket	1

*Not Illustrated

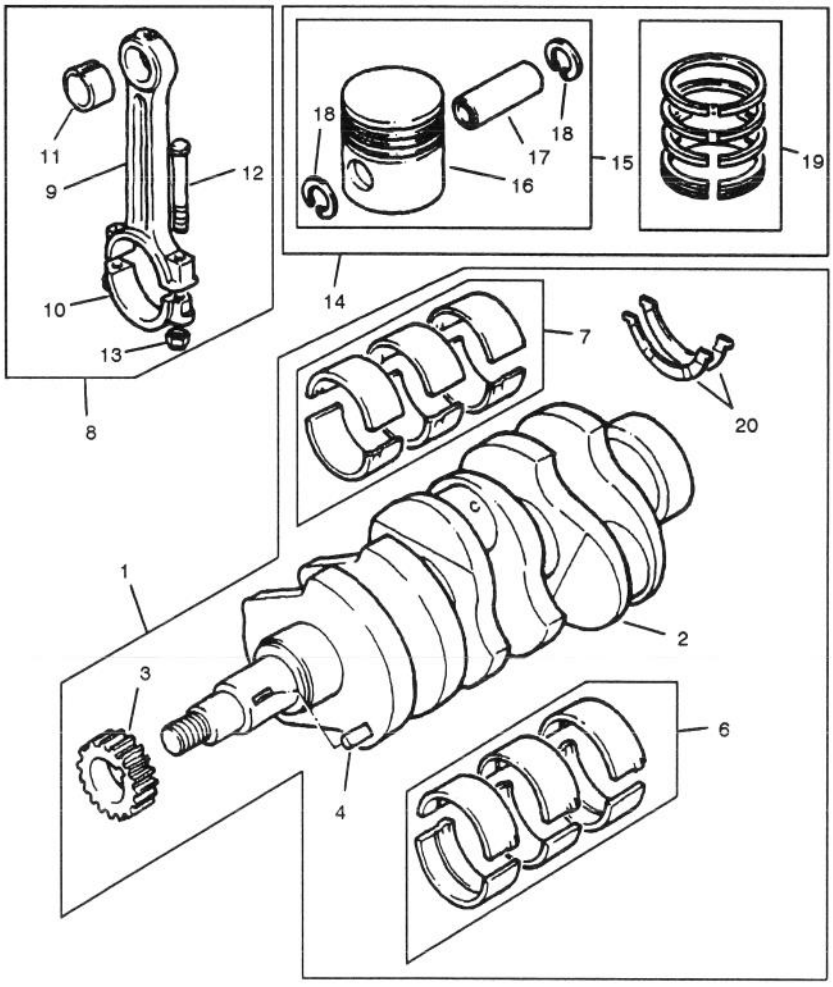

CRANKSHAFT ASSEMBLY

Ref. No.	Part No.	Description	No. Used
1	115236020	Kit – Crankshaft Inc. Ref. #2)	1
2		Crankshaft	1
3	115276210	Gear	1
4	030509020	Key	1
6	198586030	Kit – Bearing Std.	1
*	198586034	Kit – Bearing –0.25mm	1
*	198586037	Kit – Bearing –0.50mm	1
7	198586060	Kit – Bearing Std.	1
*	198586064	Kit – Bearing –0.25mm	1
*	198586067	Kit – Bearing –0.50mm	1
8	115026240	Connecting Rod Assembly Incl. Ref. # 9 & 10)	3
9		Rod	1
10		Cap	1
11	198517325	Bush	1
12	115176130	Screw	2

Ref. No.	Part No.	Description	No. Used
13	020109103	Nut	2
14	115016670	Kit – Piston Std.	3
*	115016674	Kit – Piston +0.5mm	1
*	115016677	Kit – Piston +1.0mm	1
15	115016770	Kit – Piston Std. Incl. Ref. #16)	1
*	115016774	Kit – Piston +0.5mm Incl. Ref. #16)	1
*	115016777	Kit – Piston +1.0mm Incl. Ref. #16)	1
16		Piston	1
17	115326260	Pin	1
18	03500019	Circlip	2
19	115107260	Kit – Piston Ring	1
*	115107263	Kit – Piston Ring +0.5mm	1
*	115107265	Kit – Piston Ring +1.0mm	1

*Not Illustrated

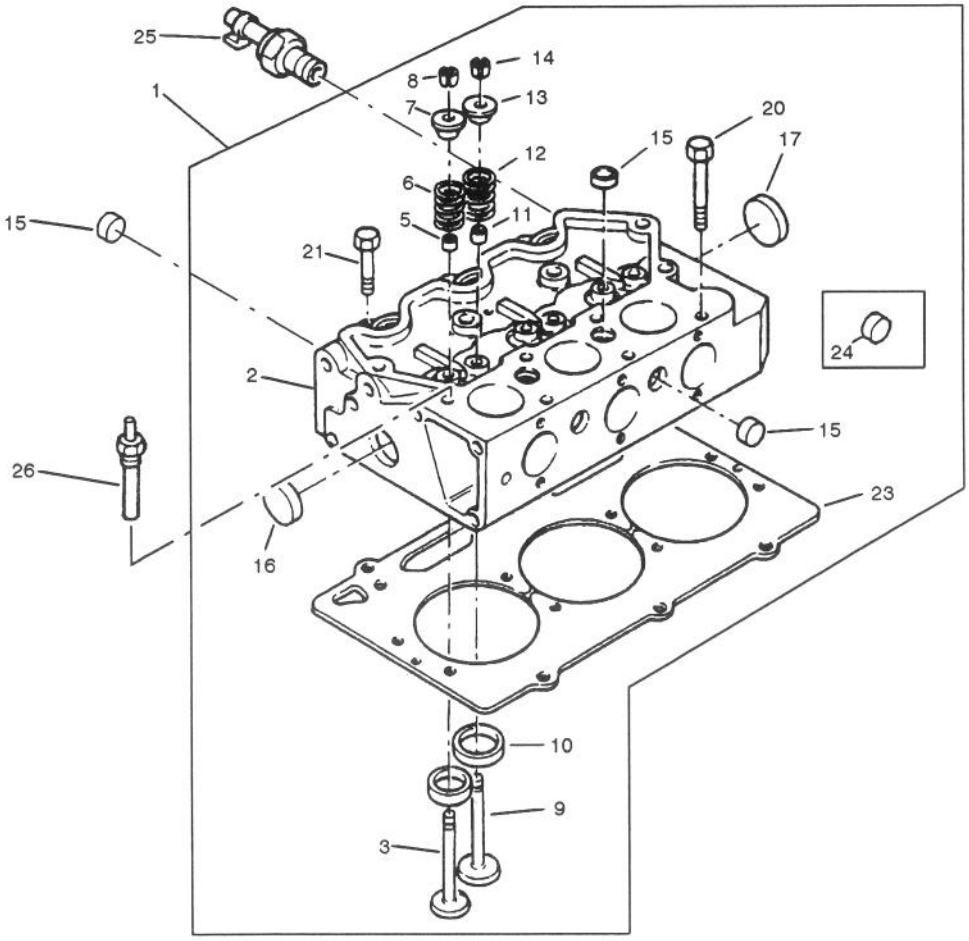

T-1379

CYLINDER HEAD ASSEMBLY

Ref. No.	Part No.	Description	No. Used
1	111016911	Kit – Cylinder Head	1
2	111086030	Kit – Cylinder Head	1
3	120166280	Valve Inlet	3
5	120406080	Seal	3
6	198217070	Spring	3
7	120186100	Cap	3
8	120226080	Cotter	6
9	120176290	Valve Exhaust	3
10	110136290	Insert	3
11	120406080	Seal	3
12	198217070	Spring	3
13	120186100	Cap	3

Ref. No.	Part No.	Description	No. Used
14	120226080	Cotter	6
15	198466070	Plug	4
16	064200022	Plug	3
17	064200022	Plug	3
20	111136340	Screw	11
21	111136350	Screw	3
23	111147100	Gasket +1.2mm	1
*	111147110	Gasket +1.3mm	1
24	064200018	Plug	2
25	185246060	Switch – Oil Pressure	1
26	385720101	Sender – Temperature	1

*Not Illustrated

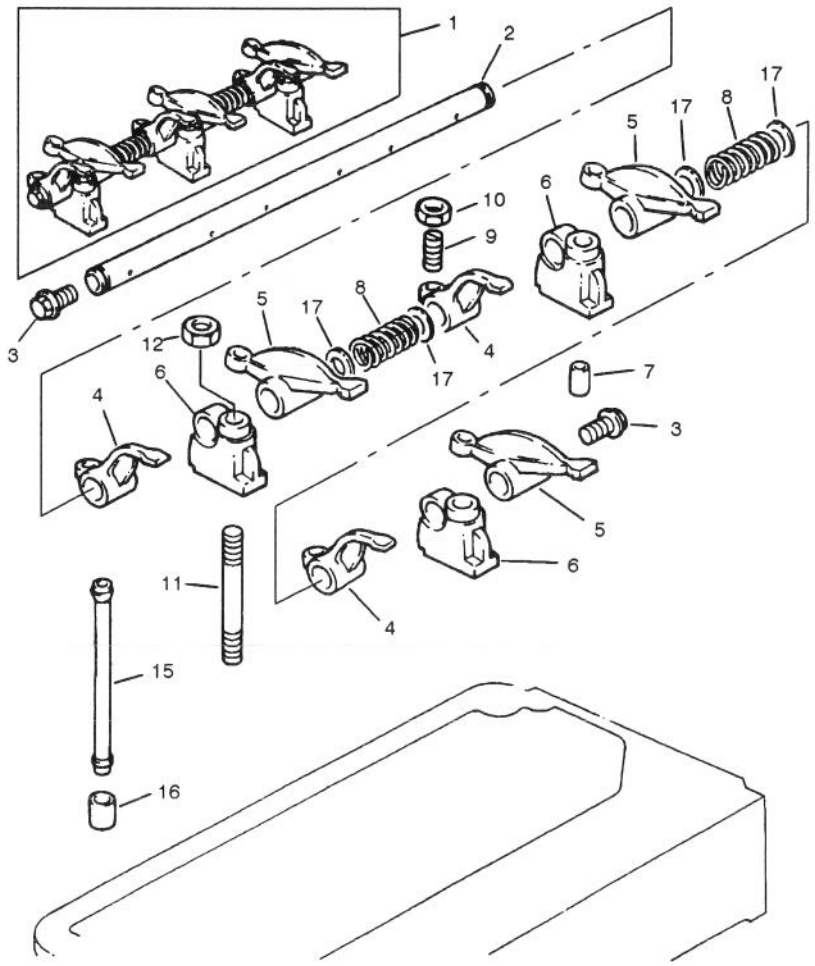

T-1380

ROCKER ARM ASSEMBLY

Ref. No.	Part No.	Description	No. Used
1	120336020	Rocker Shaft Assembly	1
2	120316190	Shaft	1
3	064609006	Plug	2
4	120356120	Lever	3
5	120356110	Lever	3
6	120346170	Bracket	3
7	030300325	Pin	1
8	198217080	Spring	2

Ref. No.	Part No.	Description	No. Used
9	199486220	Adjusting Screw	6
10	020109076	Nut	6
11	012109177	Stud	3
12	023100008	Nut	3
15	120456240	Rod	6
16	120116100	Tappet	6
17	199280280	Washer	4

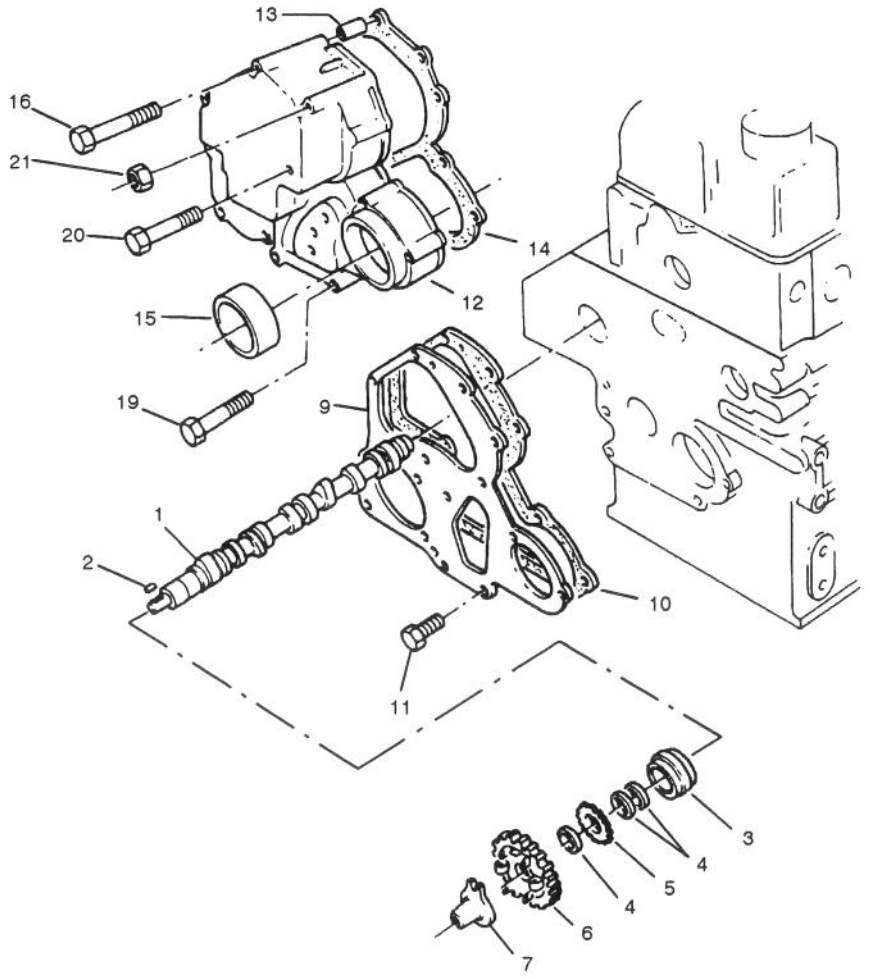

T-1381

CAMSHAFT ASSEMBLY

Ref. No.	Part No.	Description	No. Used
1	120026120	Camshaft	1
2	034100508	Key	1
3	040109059	Bearing	1
4	199216230	Spacer	3
5	120736081	Gear	1
6	120016030	Gear	1
7	125256120	Tappet	1
9	165166260	Plate	1
10	165996400	Joint	1

Ref. No.	Part No.	Description	No. Used
11	011300612	Bolt	3
12	165106130	Cover	1
13	030300414	Pin	1
14	165996410	Joint	1
15	198636090	Seal	1
16	011300680	Screw	2
19	011300640	Screw	4
20	011300660	Screw	2
21	023100006	Nut	1

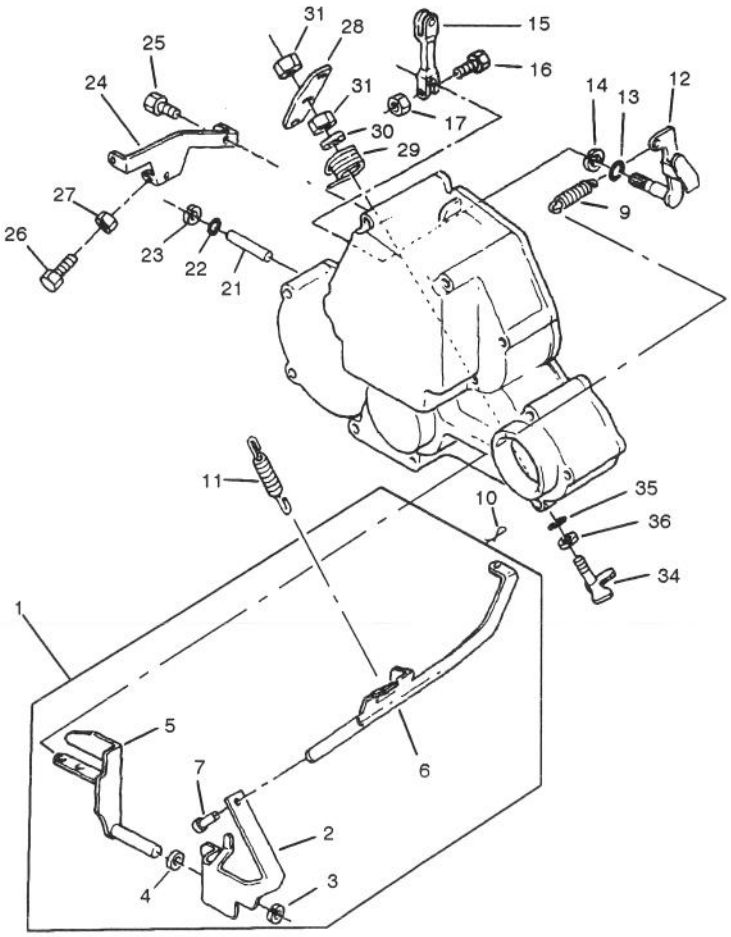

T–1382

TIMING COVER ASSEMBLY

Ref. No.	Part No.	Description	No. Used
1	125046140	Lever (Incl. Ref. #2, 6 & 7)	1
2		Lever	1
3	036800008	Circlip	1
4	026200010	Washer	1
5	125406071	Lever	1
6		Link	1
7		Pin	1
9	198217220	Spring	1
10	031100004	Pin	1
11	198217420	Spring	1
12	125156170	Arm	1
13	052100070	O Ring	1
14	036800008	Circlip	1
15	125416020	Lever	1
16	010110630	Screw	1

Ref. No.	Part No.	Description	No. Used
17	023100006	Nut	1
21	125116130	Shaft	1
22	052100030	Seal – O–Ring	1
23	036800005	Circlip	1
24	125976120	Stay	1
25	011300618	Screw	2
26	010109264	Screw	2
27	023100006	Nut	2
28	125176080	Lever	1
29	198216760	Spring	1
30	026200008	Washer	1
31	020300008	Nut	2
34	125156180	Arm	1
35	052100050	O Ring	1
36	036800006	Circlip	1

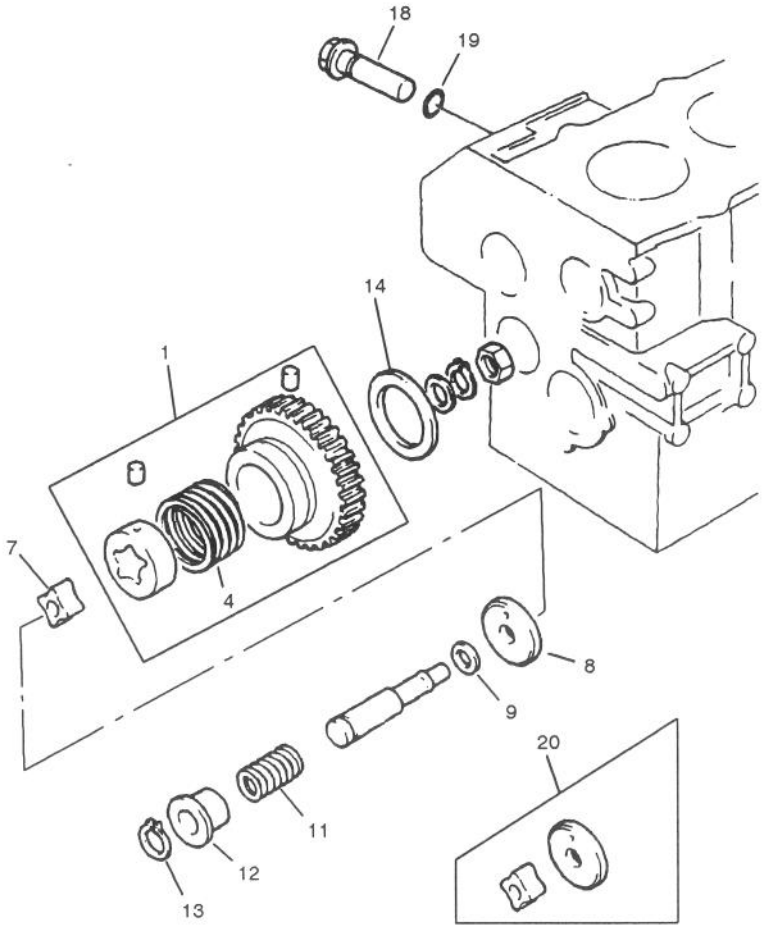

T-1383

OIL PUMP ASSEMBLY

Ref. No.	Part No.	Description	No. Used
1	165026110	Gear	1
4	198216821	Spring	1
7	140166130	Rotor	1
8	140116140	Cover	1
9	199286150	Shim +0.10mm	1
*	199286160	Shim +0.15mm	1
*	199286170	Shim +0.20mm	1
*	199286180	Shim +0.50mm	1

Ref. No.	Part No.	Description	No. Used
11	198216720	Spring	1
12	199236540	Collar	1
13	036800010	Circlip	1
14	199266180	Washer	1
18	140036120	Valve	1
19	052100150	Seal – O–Ring	1
20	140186010	Repalr Kit	1

*Not Illustrated

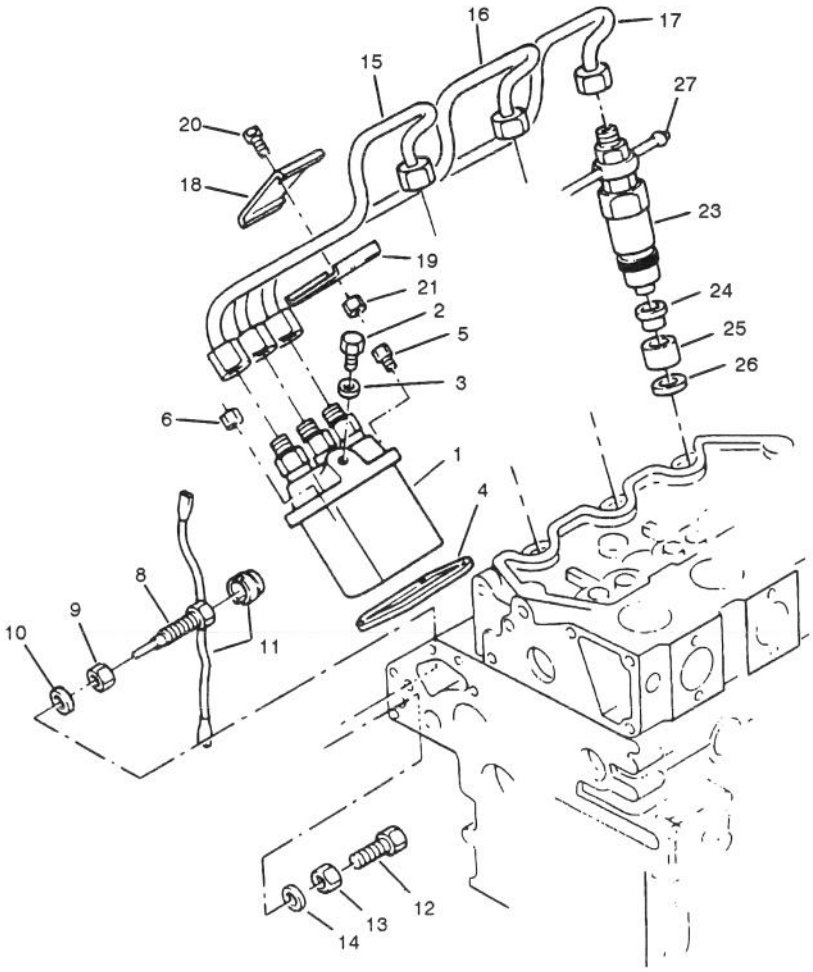

T–1384

FUEL INJECTION SYSTEM ASSEMBLY

Ref. No.	Part No.	Description	No. Used
1	131017340	Injection Pump	1
2	131236201	Screw	1
3	025100006	Washer	1
4	131437310	Shim +0.2mm	1
*	131437320	Shim +0.3mm	1
*	131437330	Shim +0.4mm	1
*	131437340	Shim +0.5mm	1
*	131437340	Shim +1.0mm	1
5	011300620	Screw	2
6	023100006	Nut	2
8	131046160	Screw	1
9	023109002	Nut	1
10	025100010	Washer	1
11	198236030	Wire	1
12	010109270	Screw	1

Ref. No.	Part No.	Description	No. Used
13	023109002	Nut	1
14	025100010	Washer	1
15	131507010	Injection Pipe No. 1 Cyl.	1
16	131507020	Injection Pipe No. 2 Cyl.	1
17	131507030	Injection Pipe No. 3 Cyl.	1
18	199106020	Damper	2
19	199106020	Damper	2
20	010100625	Screw	2
21	023100006	Nut	2
23	131406340	Atomiser	3
24	131426200	Gasket	3
25	111316280	Insert	3
26	198996090	Seal	3
27	131606260	Pipe	1

*Not Illustrated

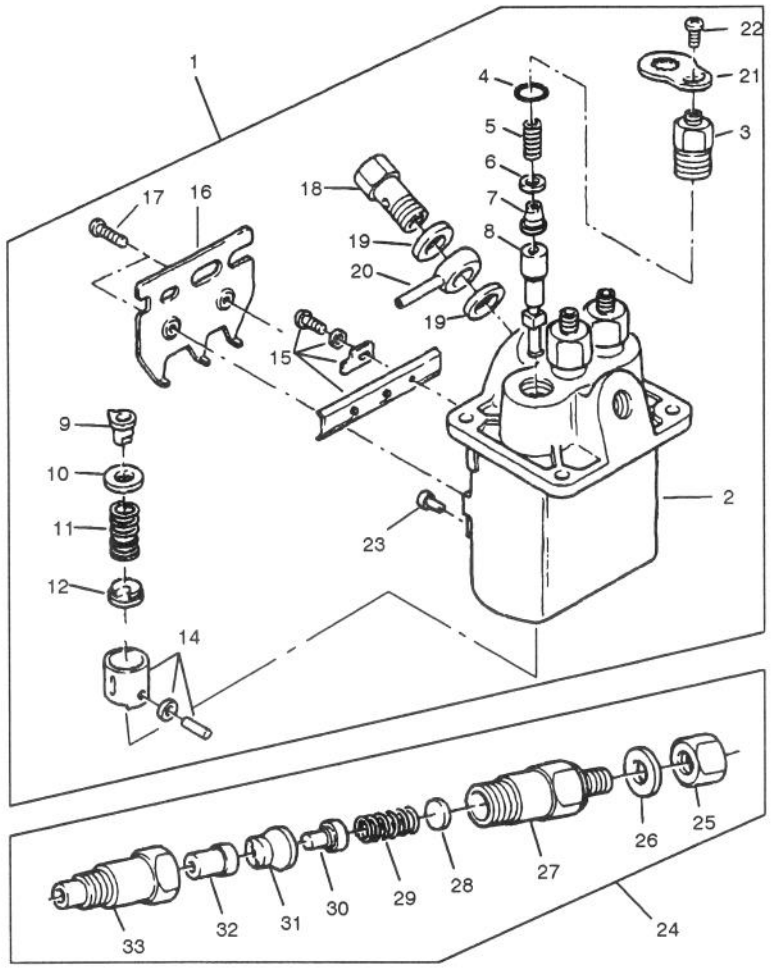

T-1385

INJECTION PUMP ASSEMBLY

Ref. No.	Part No.	Description	No. Used
1	131017340	Injection Pipe	1
2	131296665	Housing	1
3	131196120	Holder	3
4	131226170	Seal – O–Ring	3
5	131176430	Spring	3
6	131186050	Gasket	3
7	131156160	Valve	3
8	131116410	Element	3
9	131296951	Sleeve	3
10	131296620	Seat	3
11	131176440	Spring	3
12	131296621	Seat	3
*	131296622	Plate +1.85mm	1
*	131296623	Plate +1.90mm	1
*	131296625	Plate +2.00mm	1
*	131296626	Plate +2.05mm	1
*	131296627	Plate +2.10mm	1
*	131296628	Plate +2.15mm	1
*	131296629	Plate +2.20mm	1
*	131296630	Plate +2.25mm	1
*	131296631	Plate +2.30mm	1
*	131296632	Plate +2.35mm	1
*	131296633	Plate +2.40mm	1
*	131296634	Plate +2.45mm	1
*	131296635	Plate +2.50mm	1
14	131256120	Tappet	3

Ref. No.	Part No.	Description	No. Used
15	131296636	Rack	1
16	131296650	Bracket	1
17	131136320	Screw	2
18	131236190	Bolt	1
19	131246180	Washer	2
20	131246130	Nipple	1
21	131296662	Plate	3
22	131136330	Screw	3
23	131296651	Pin	3
24	131406340	Atomiser	3
25	131446069	Nut	1
26	131426210	Washer	1
27	131446065	Body	1
28	131437250	Shim +0.90mm	1
*	131437251	Shim +0.925mm	1
*	131437252	Shim +0.95mm	1
*	131437253	Shim +0.975mm	1
*	131437354	Shim +1.00mm	1
*	131437255	Shim +1.025mm	1
*	131437256	Shim +1.05mm	1
*	131437257	Shim +1.075mm	1
*	131437258	Shim +1.10mm	1
*	131437259	Shim +1.125mm	1
*	131437260	Shim +1.15mm	1
*	131437261	Shim +1.175mm	1
*	131437262	Shim +1.20mm	1

*Not Illustrated

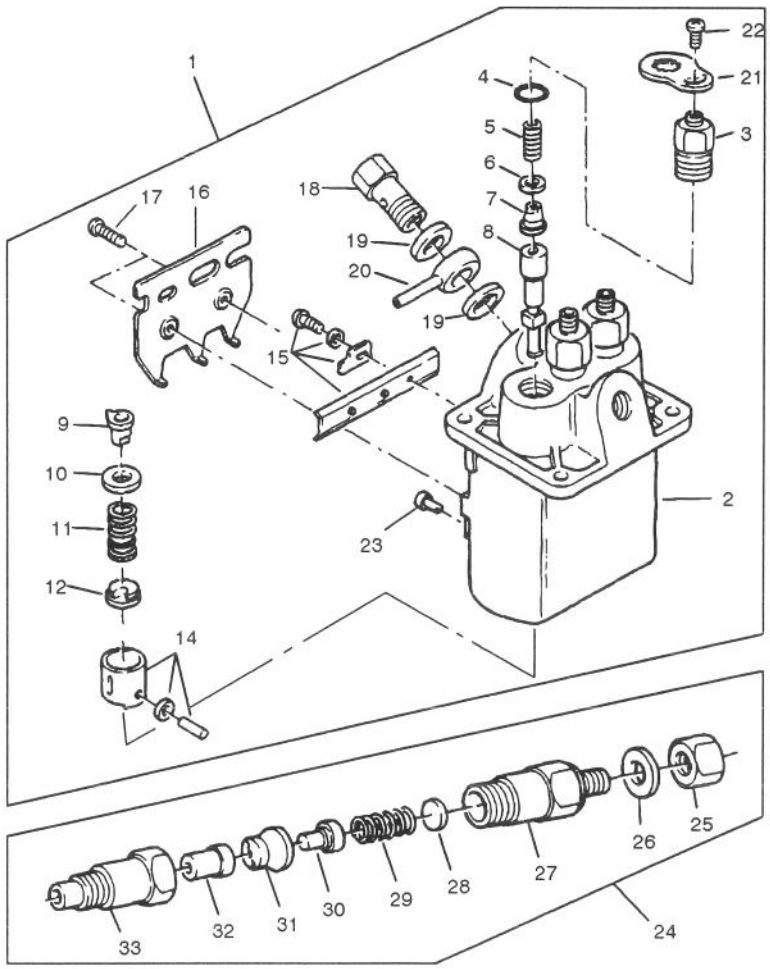

T–1385

INJECTION PUMP ASSEMBLY (Continued)

Ref. No.	Part No.	Description	No. Used
28	131437263	Shim +1.225mm	1
*	131437264	Shim +1.250mm	1
*	131437265	Shim +1.275mm	1
*	131437266	Shim +1.30mm	1
*	131437267	Shim +1.325mm	1
*	131437268	Shim +1.35mm	1
*	131437269	Shim +1.375mm	1
*	131437270	Shim +1.40mm	1
*	131437271	Shim +1.425mm	1
*	131437272	Shim +1.45mm	1

Ref. No.	Part No.	Description	No. Used
29	131446066	Spring	1
30	131446070	Pin	1
31	131446068	Spacer	1
32	131416150	Nozzle	1
33	131446067	Nut	1

*Not Illustrated

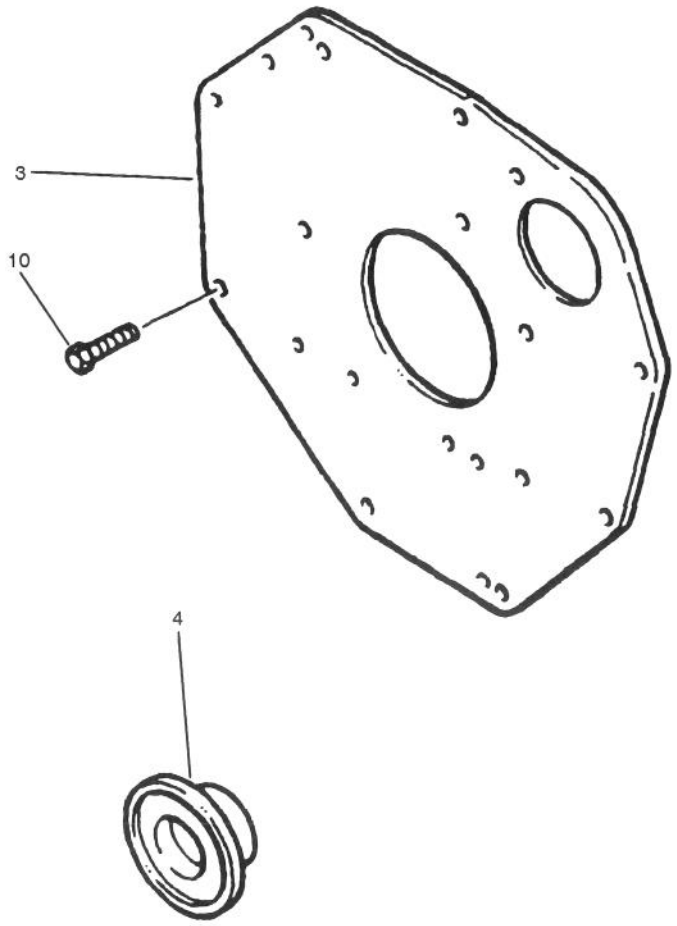

T–1386

FLYWHEEL HOUSING ASSEMBLY

Ref. No.	Part No.	Description	No. Used
3	110366700	Plate	1
4	198636080	Seal	1

Ref. No.	Part No.	Description	No. Used
10	011310816	Screw	10

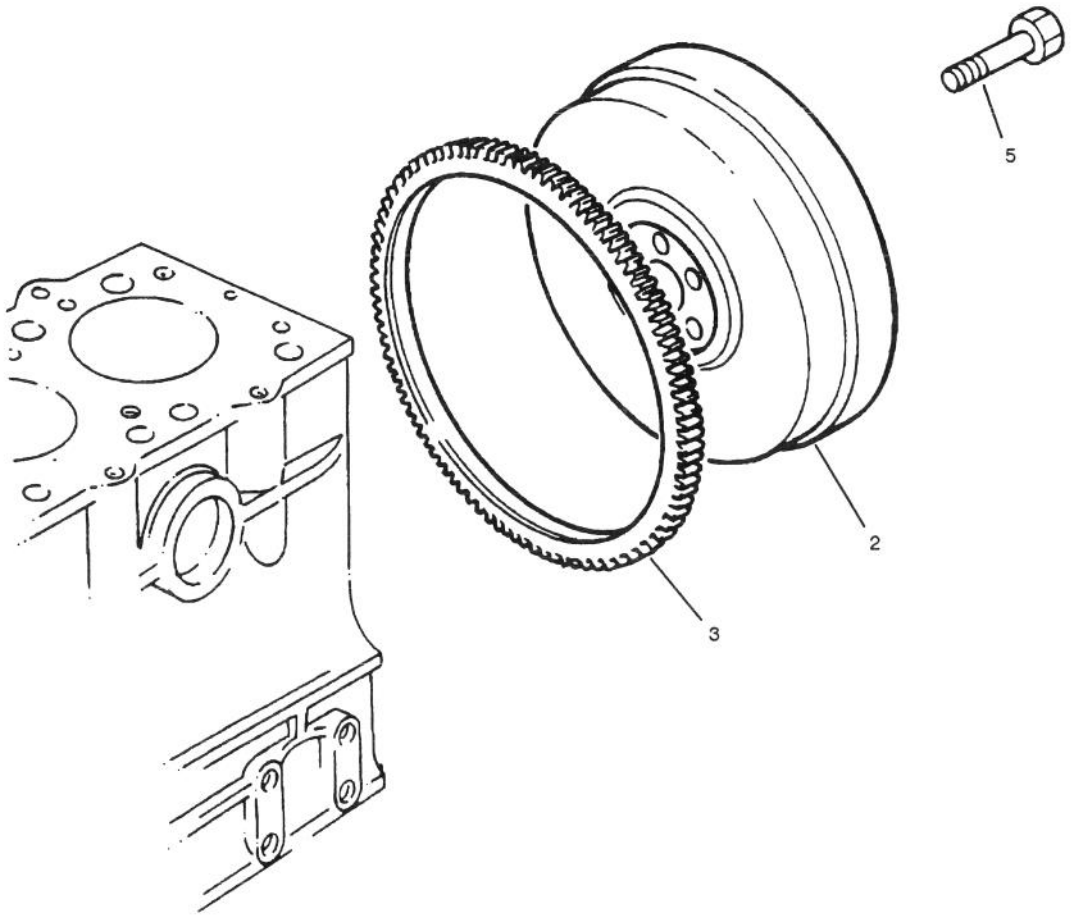

T–1387

FLYWHEEL ASSEMBLY

Ref. No.	Part No.	Description	No. Used
2	115356921	Flywheel	1
3	115376150	Gear – Ring	1

Ref. No.	Part No.	Description	No. Used
5	010109330	Screw	4

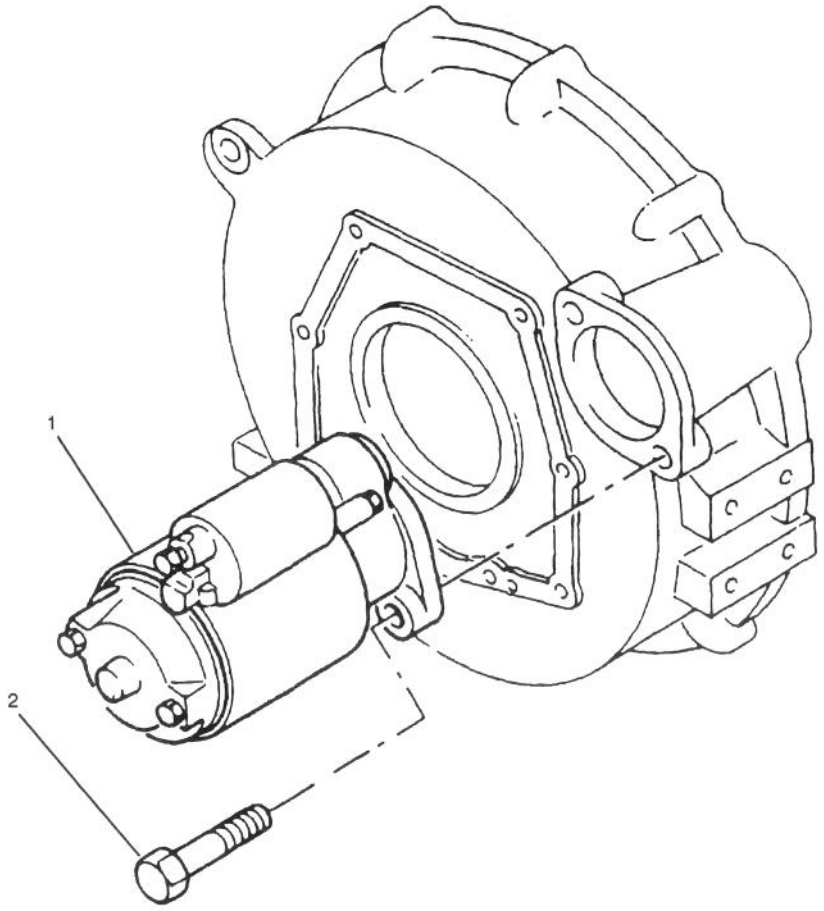

T–1388

STARTER INSTALLATION ASSEMBLY

Ref. No.	Part No.	Description	No. Used
1	185086370	Startermotor	1

Ref. No.	Part No.	Description	No. Used
2	011601020	Screw	2

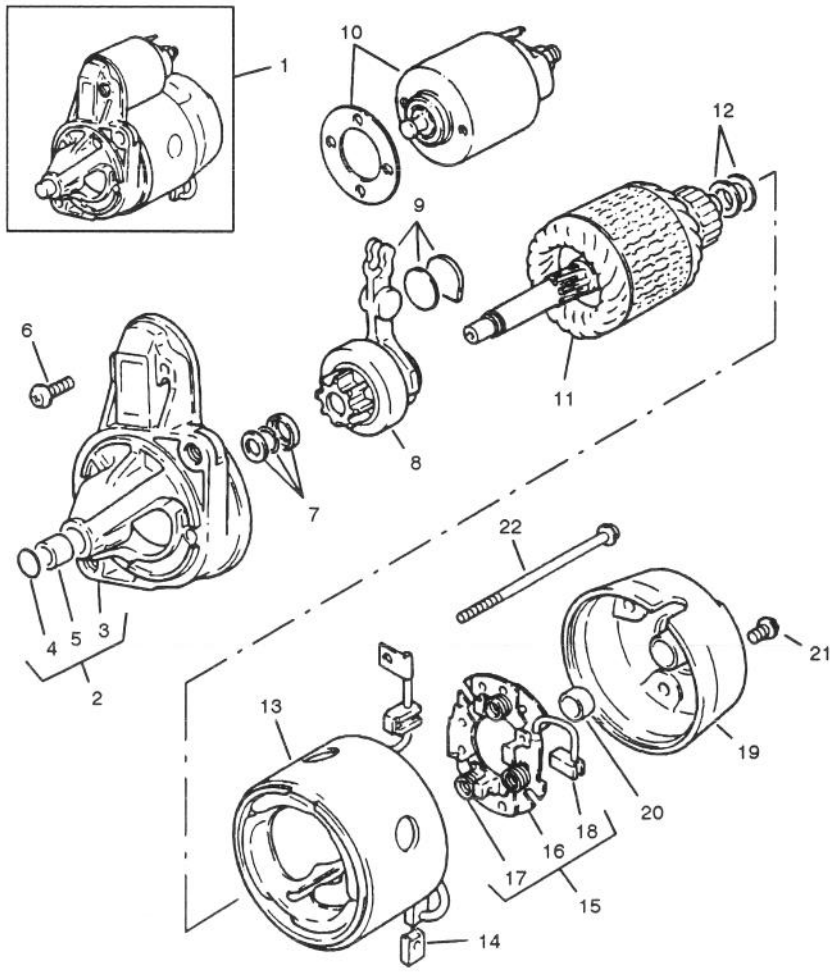

T–1389

STARTER ASSEMBLY

Ref. No.	Part No.	Description	No. Used
1	185086370	Startermotor	1
2	185846471	Cover	
		(Incl. Ref. #3 & 4)	1
3		Cover	1
4		Ring	1
5	185846472	Bush	2
6	185846468	Screw	2
7	185846473	Washer	1
8	185866240	Pinion	1
9	185846469	Lever	1
10	185816220	Switch	1
11	185846474	Armature	1

Ref. No.	Part No.	Description	No. Used
12	185846475	Washer	1
13	185846476	Yoke	1
14	185416400	Brush	1
15	185416390	Holder	
		(Incl. Ref. #16)	1
16		Holder	1
17	185886010	Spring	1
18	185416410	Brush	1
19	185846477	Cover	1
20	185846478	Bush	1
21	185846468	Screw	3
22	185846470	Screw	2

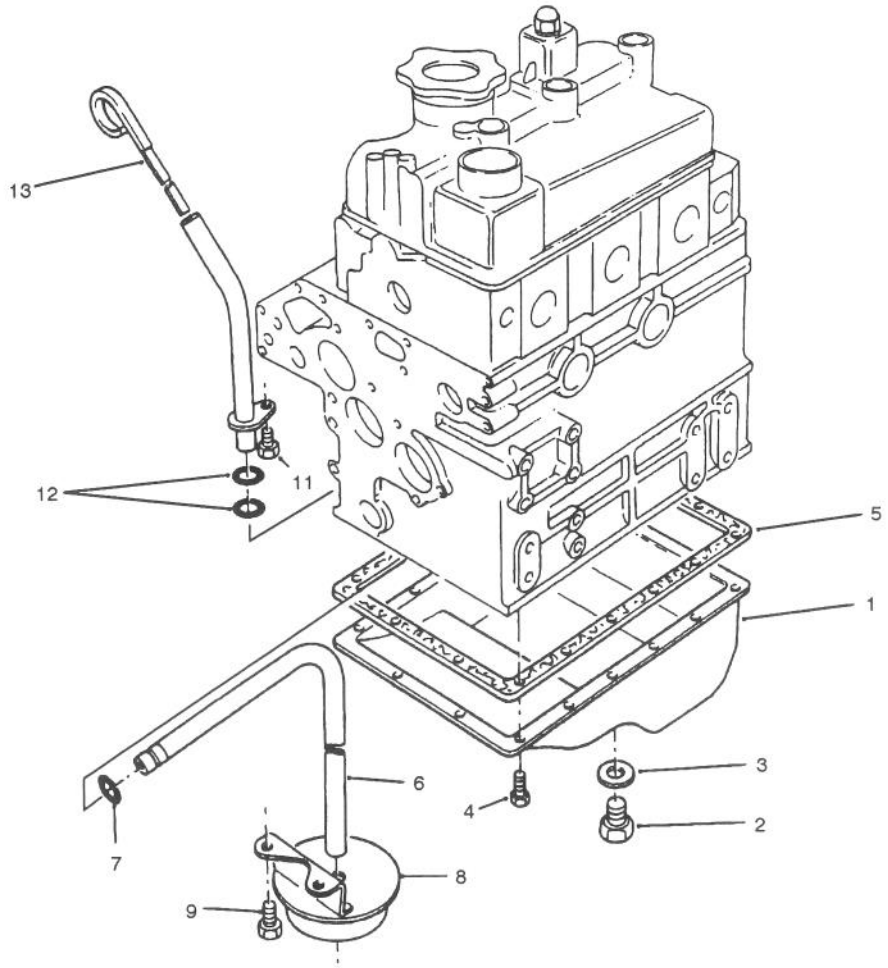

T–1390

OIL SUMP ASSEMBLY

Ref. No.	Part No.	Description	No. Used
1	110706860	Sump	1
2	010401212	Plug	2
3	025100012	Washer	2
4	010109235	Screw	18
5	110996590	Gasket	1
6	140986590	Pipe	1
7	052109076	Seal – O–Ring	1

Ref. No.	Part No.	Description	No. Used
8	140406310	Strainer	1
9	011300612	Bolt	2
11	011300612	Bolt	1
*	011300812	Screw	1
12	052100100	Seal – O–Ring	2
13	198416371	Dipstick	1

*Not Illustrated

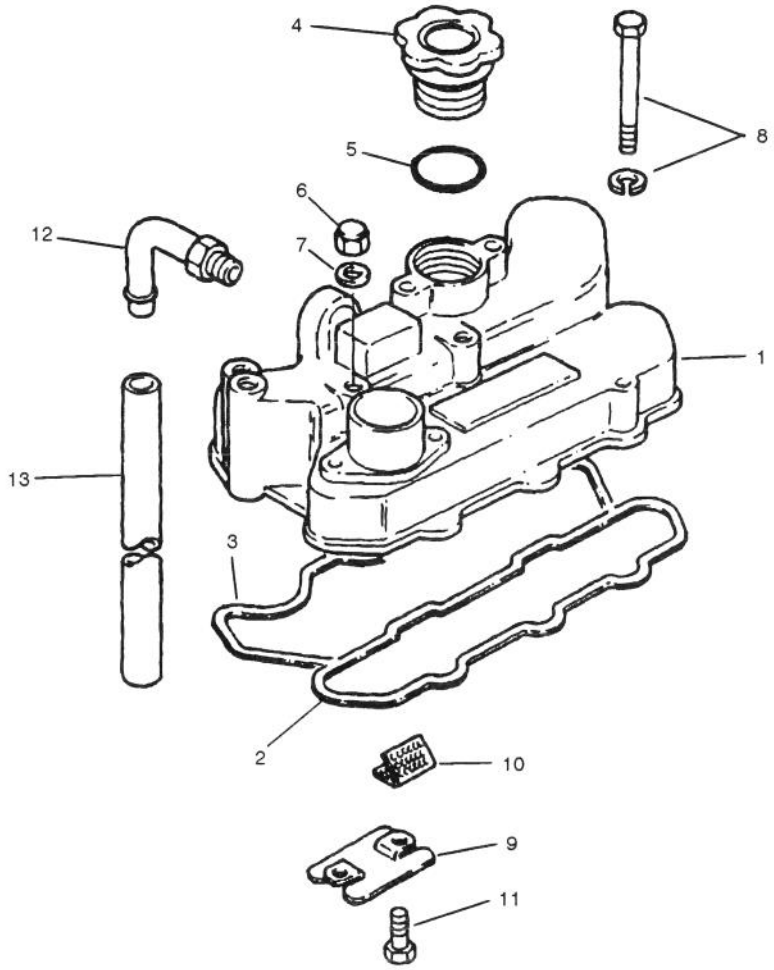

T–1391

VALVE COVER ASSEMBLY

Ref. No.	Part No.	Description	No. Used
1	111216630	Cover	1
*	111026371	Cover	1
2	111996330	Gasket	1
3	111996060	Gasket	1
4	198436010	Cap	1
5	052100400	Seal	1
6	024500008	Nut	3

Ref. No.	Part No.	Description	No. Used
7	198996060	Washer	3
8	011300650	Screw	2
9	110666110	Plate	1
10	110666120	Gauze	1
11	011300612	Bolt	2
12	110986500	Pipe	1
13	068122560	Hose	1

*Not Illustrated

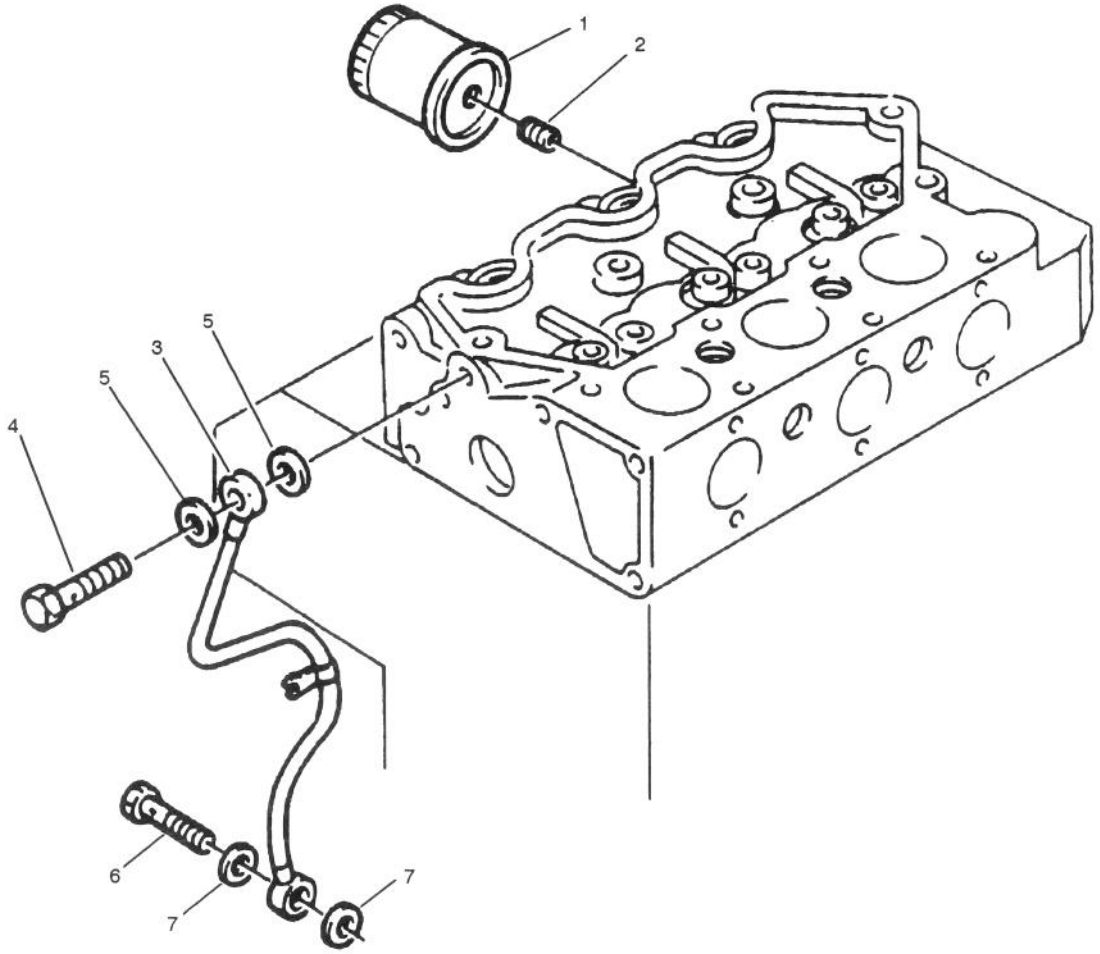

T–1392

OIL FILTER ASSEMBLY

Ref. No.	Part No.	Description	No. Used
1	140516190	Filter – Oil	1
2	140546020	Connection	1
3	140606680	Pipe	1
4	198486780	Bolt	1

Ref. No.	Part No.	Description	No. Used
5	198996060	Washer	2
6	198486780	Bolt	1
7	198996060	Washer	2

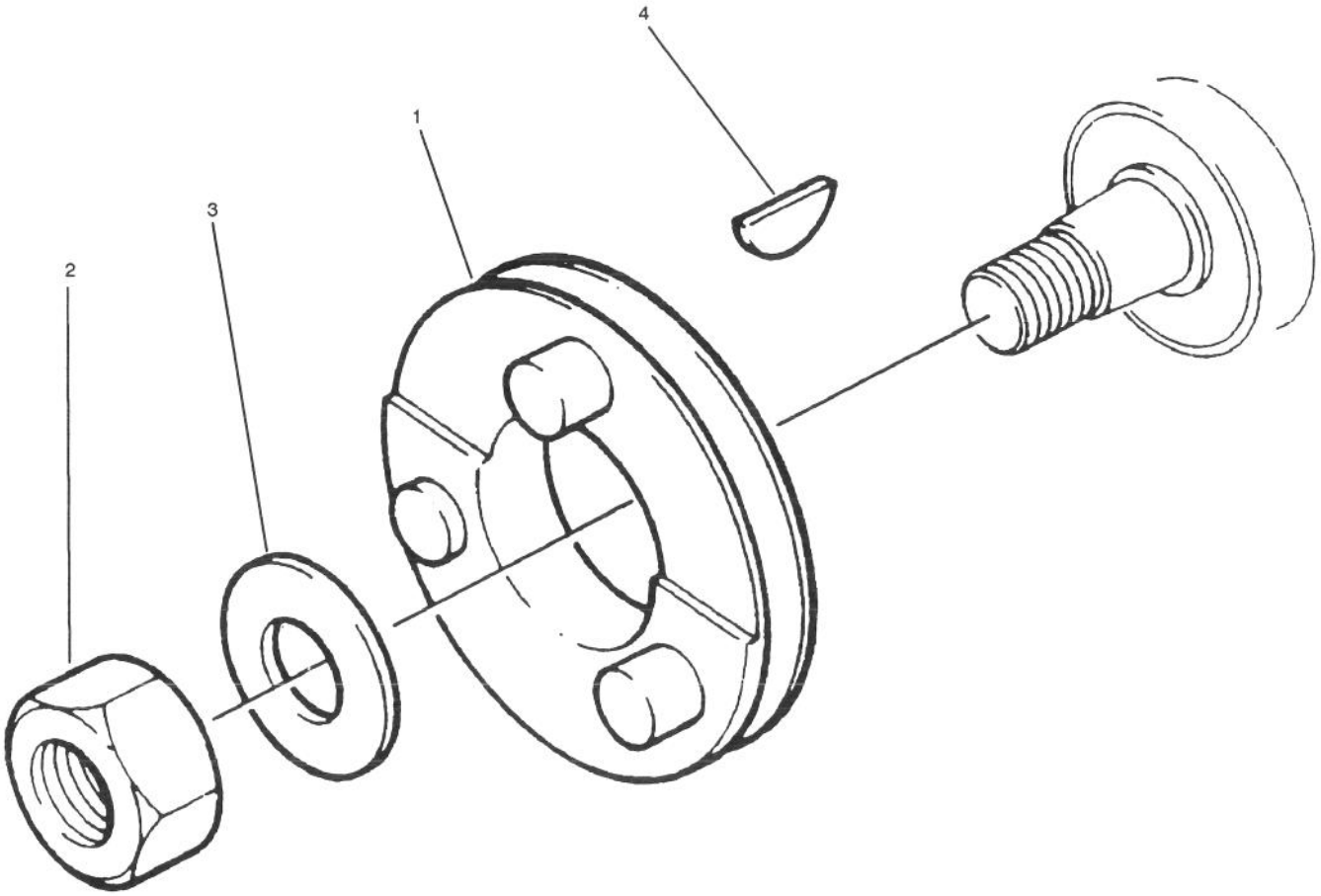

T–1393

FRONT DRIVE PULLY ASSEMBLY

Ref. No.	Part No.	Description	No. Used
1	115397550	Pulley	1
2	020800018	Nut	1

Ref. No.	Part No.	Description	No. Used
3	026200018	Washer	1
4	134100508	Key	1

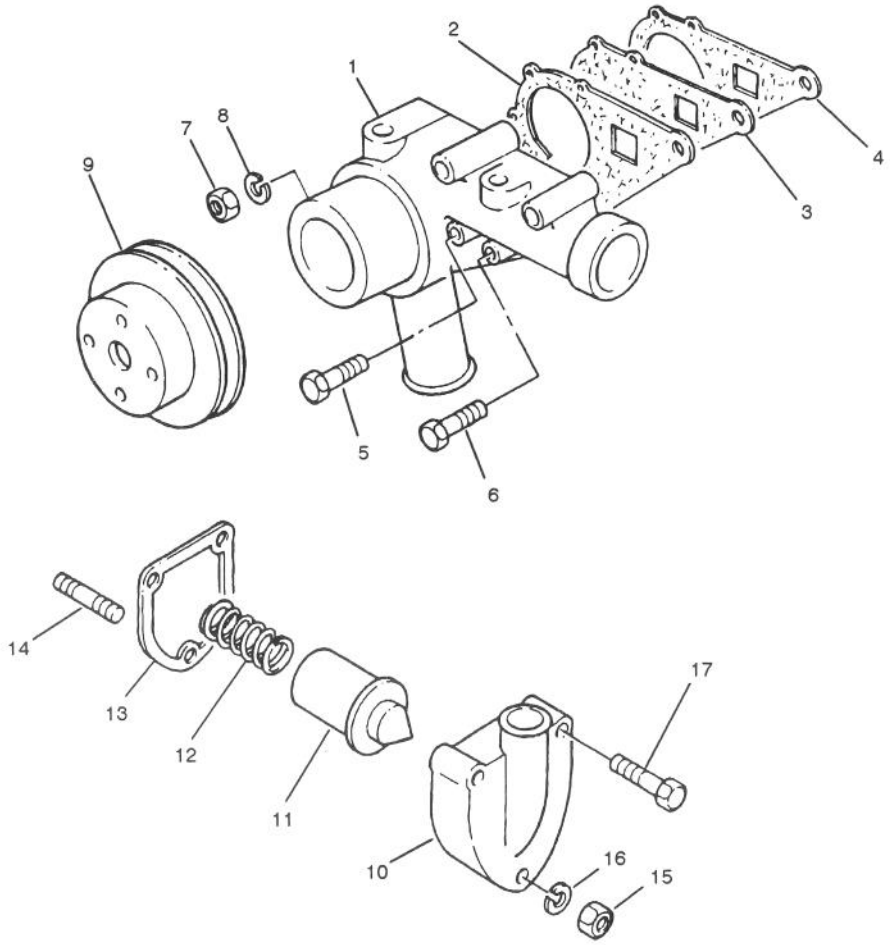

T-1394

WATER PUMP ASSEMBLY

Ref. No.	Part No.	Description	No. Used
1	145016840	Pump – Water	1
2	145996430	Gasket	1
3	145146270	Backplate	1
4	145996420	Gasket	1
5	011300635	Screw	3
6	011300650	Screw	4
7	023100006	Nut	1
8	027100006	Washer	1
9	145336490	Pulley	1

Ref. No.	Part No.	Description	No. Used
10	145216160	Housing	1
11	145206061	Thermostat	1
12	198217090	Spring	1
13	145996440	Gasket	1
14	012100650	Stud	1
15	023100006	Nut	1
16	027100006	Washer	1
17	011300650	Screw	2

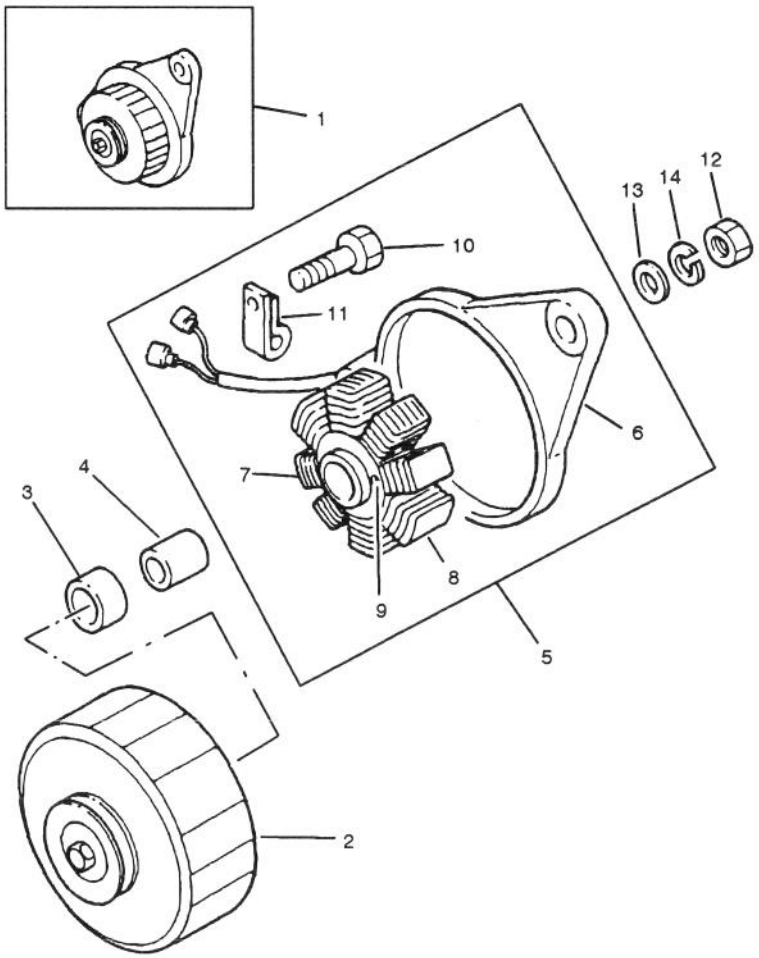

T-1397

ALTERNATOR ASSEMBLY

Ref. No.	Part No.	Description	No. Used
1	185046210	Alternator	1
2	185446219	Pulley	1
3	040126201	Bearing	1
4	199236510	Collar	1
5	185446217	Plate	1
6	185716200	Plate	1
7	040126201	Bearing	1

Ref. No.	Part No.	Description	No. Used
8	185426218	Stator	1
9	015140425	Screw	2
10	015140408	Screw	1
11	185446220	Clip	1
12	020210010	Nut	1
13	026100010	Washer	1
14	027100010	Washer	1

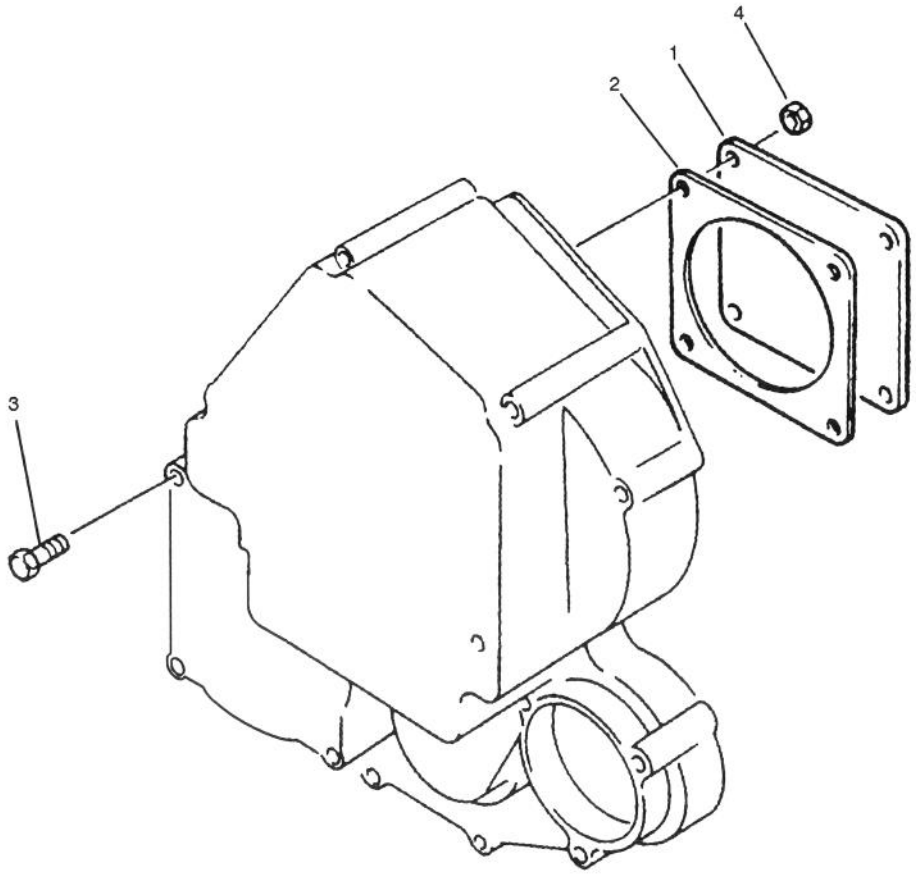

T–1398

TIMING COVER PLATE ASSEMBLY

Ref. No.	Part No.	Description	No. Used
1	165206360	Plate	1
2	165996420	Gasket	1

Ref. No.	Part No.	Description	No. Used
3	010110850	Screw	4
4	023100008	Nut	4

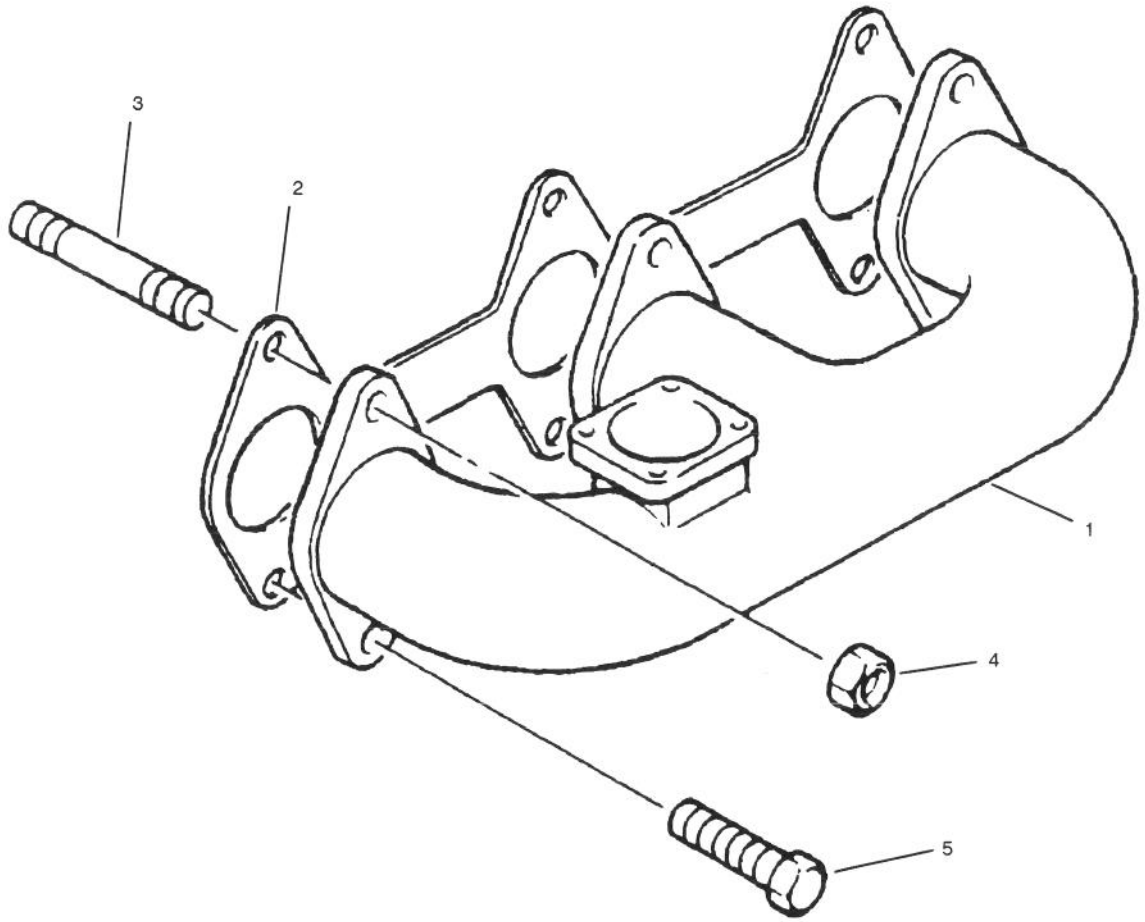

T-1399

EXHAUST MANIFOLD ASSEMBLY

Ref. No.	Part No.	Description	No. Used
1	135616630	Manifold – Exhaust	1
2	135996520	Gasket	1
3	012110625	Stud	3
4	023100006	Nut	3
5	011310625	Screw	3

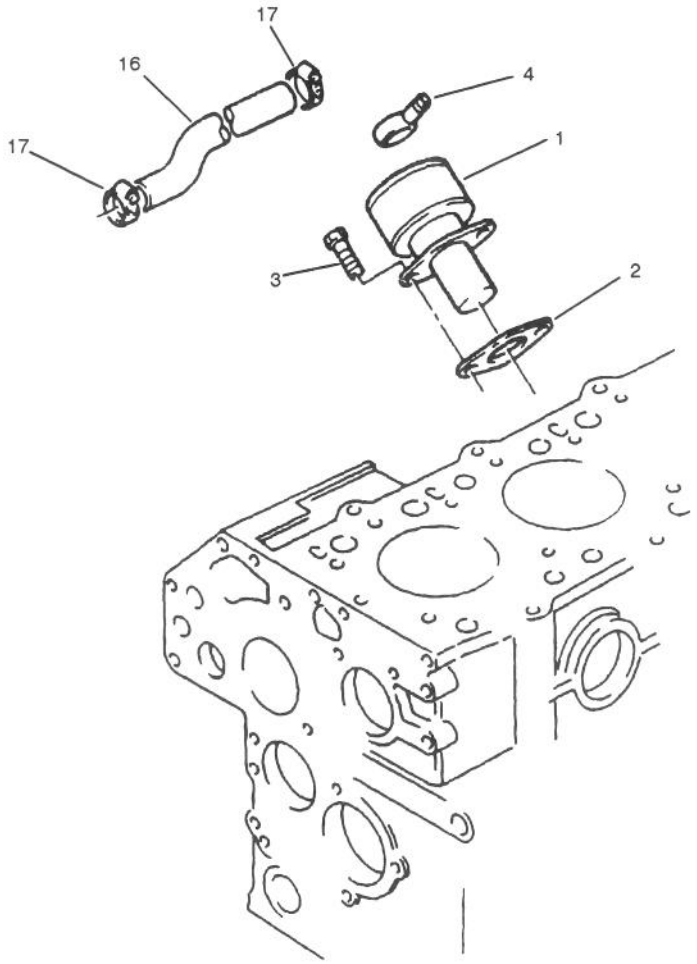

T–1400

LOW PRESSURE FUEL SYSYEM ASSEMBLY

Ref. No.	Part No.	Description	No. Used
1	130506140	Pump – Lift	1
2	130996070	Gasket	1
3	011140616	Screw	2

Ref. No.	Part No.	Description	No. Used
4	198486840	Connection	2
16	068209084	Hose	1
17	067100015	Clip	2

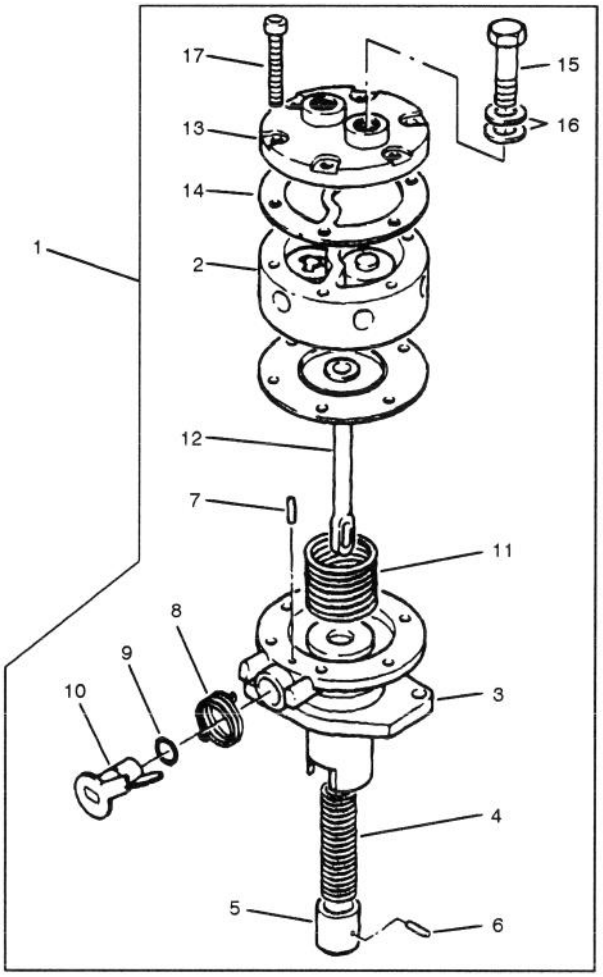

T-1401

LIFT PUMP ASSEMBLY

Ref. No.	Part No.	Description	No. Used
1	130506140	Lift Pump Assembly (Incl. Ref. #2)	1
2		Body	1
3	130516080	Body	1
4	130516081	Spring	1
5	130516082	Plunger	1
6	130516085	Pin	1
7	130516088	Pin	1
8	130516083	Spring	1
9	131226180	Seal – O-Ring	1
10	130516086	Lever	1
11	130516087	Spring	1
12	130516084	Diaphragm	1
13	130516090	Cap	1
14	130516089	Gasket	1
15	130516092	Bolt	2
16	130516069	Washer	4
17	130516091	Screw	6

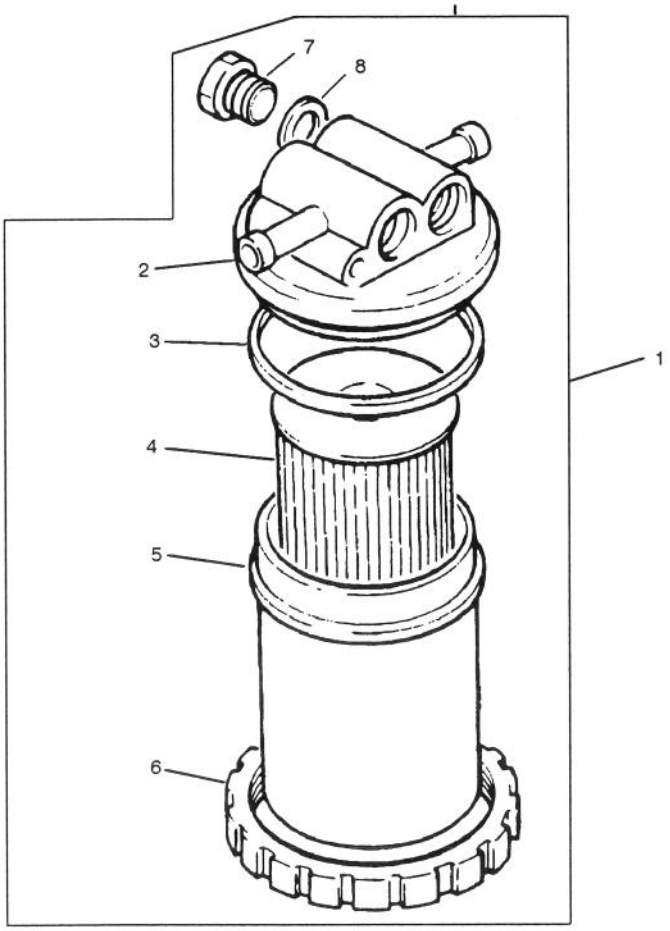

T-1402

FUEL FILTER ASSEMBLY

Ref. No.	Part No.	Description	No. Used
1	130306041	Fuel Filter Assembly (Incl. Ref. #2)	1
2		Head	1
3	052100440	Seal – O–Ring	1
4	130366040	Element	1

Ref. No.	Part No.	Description	No. Used
5	130336031	Container	1
6	130446090	Seal – O–Ring	1
7	130446080	Plug	2
8	130326120	Washer	2

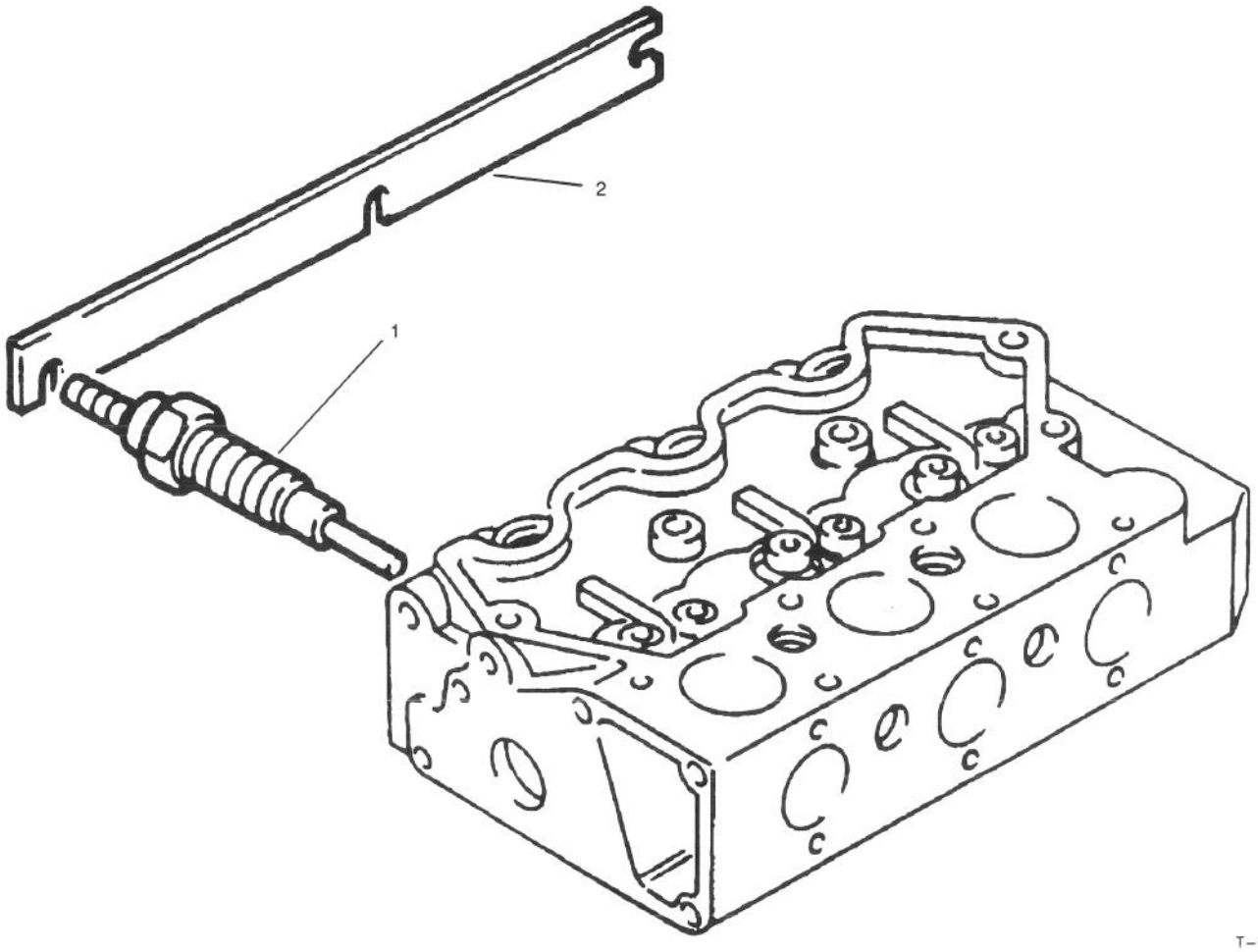

T–1403

COLD START SYSTEM ASSEMBLY

Ref. No.	Part No.	Description	No. Used
1	185366060	Heater	3

Ref. No.	Part No.	Description	No. Used
2	185376170	Bar	1

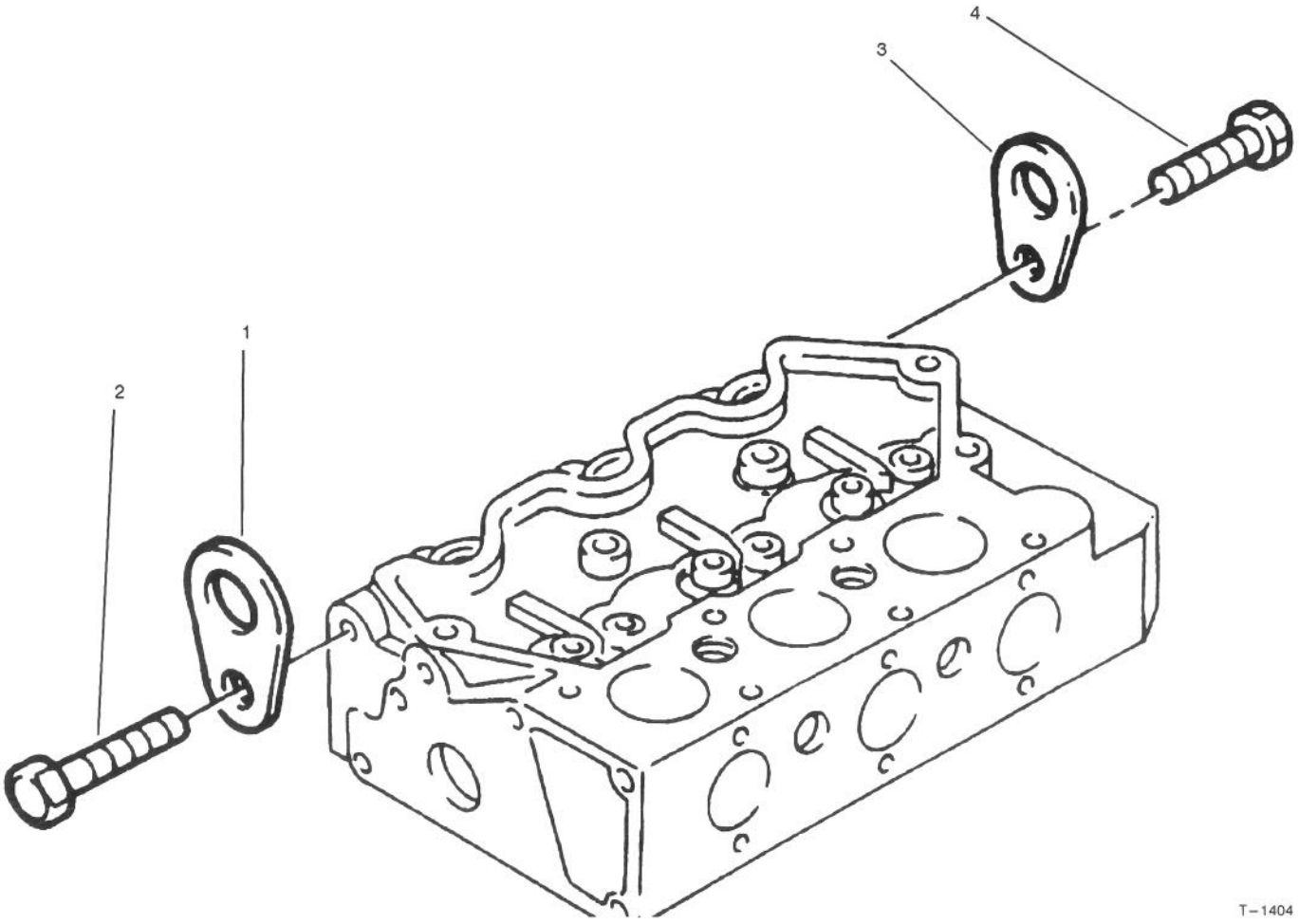

T–1404

ENGINE LIFTING TAB ASSEMBLY

Ref. No.	Part No.	Description	No. Used
1	195816200	Plate	1
2	011310816	Screw	1

Ref. No.	Part No.	Description	No. Used
3	195816200	Plate	1
4	011310816	Screw	1

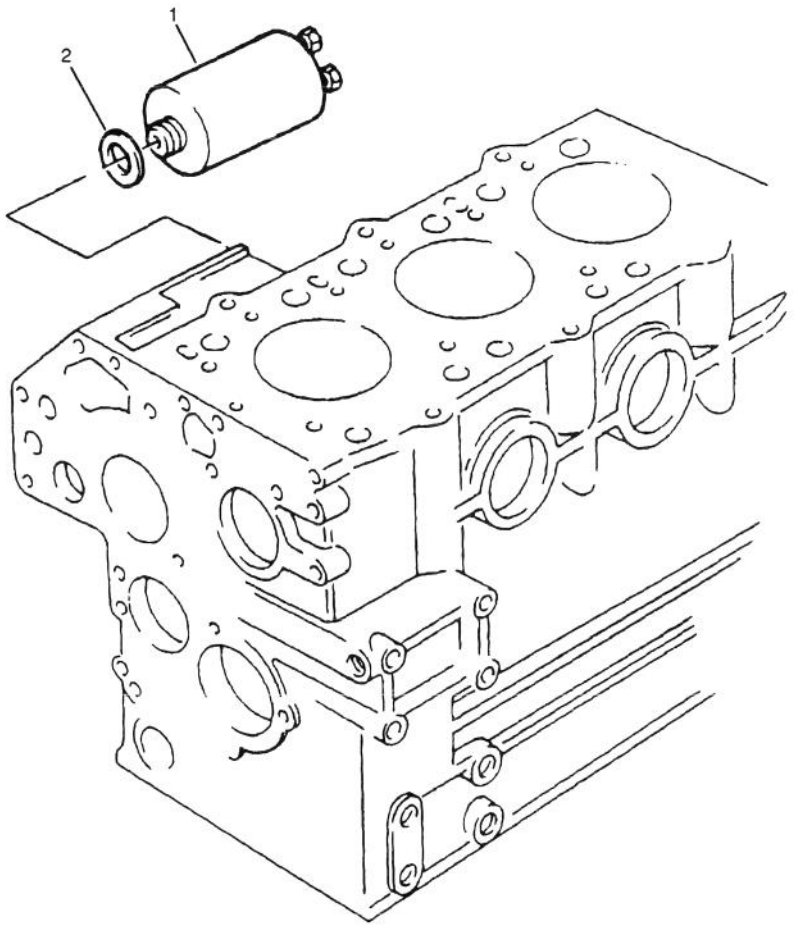

T–1405

THROTTLE STOP ASSEMBLY

Ref. No.	Part No.	Description	No. Used
1	185206082	Solenoid	1

Ref. No.	Part No.	Description	No. Used
2	025100016	Washer	1

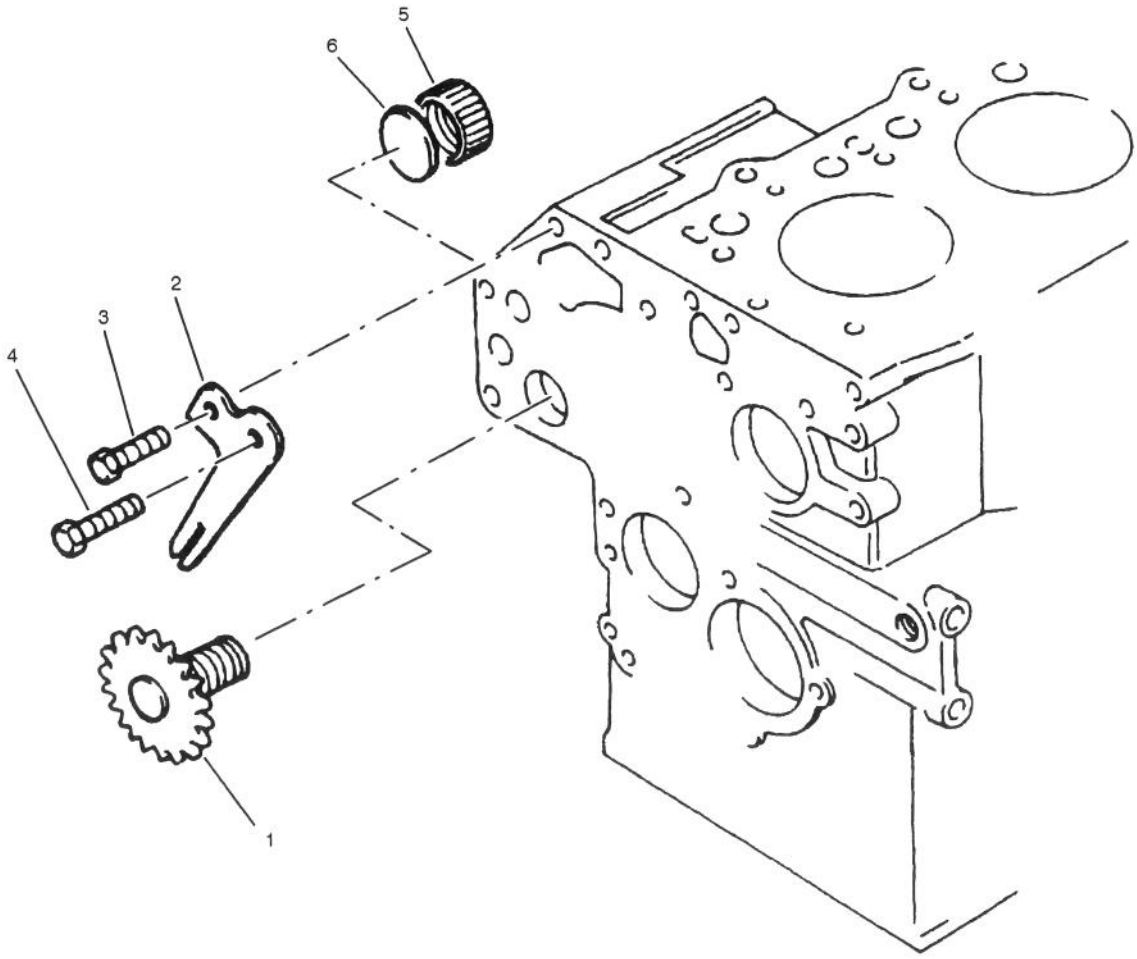

T–1406

RECORDER ASSEMBLY

Ref. No.	Part No.	Description	No. Used
1	120076070	Shaft	1
2	199566651	Plate	1
3	011310612	Screw	1

Ref. No.	Part No.	Description	No. Used
4	010700610	Screw	1
5	199376230	Cap	1
6	120996060	Seal	1

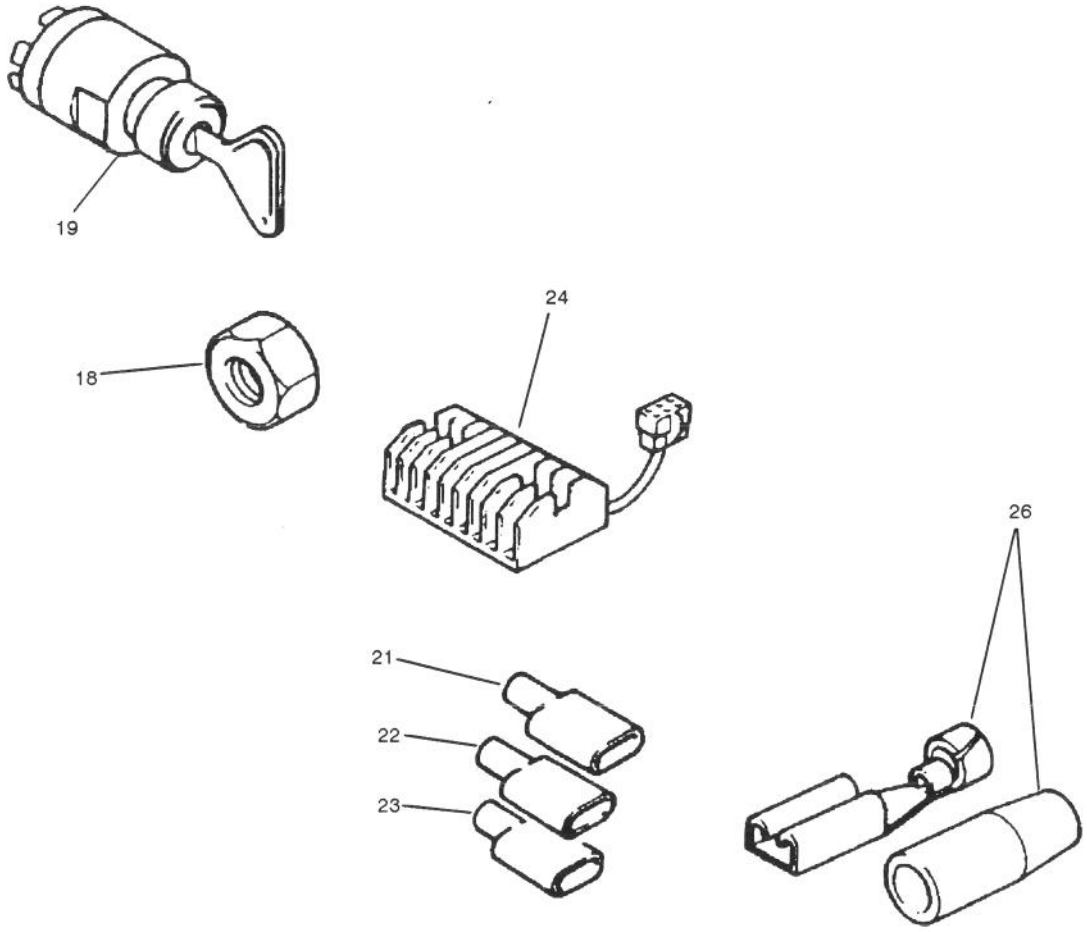

T-1407

ELECTRICAL COMPONANT ASSEMBLY

Ref. No.	Part No.	Description	No. Used
18	020100008	Nut	1
19	385201160	Switch	1
21	385620010	Connection	1
22	385620280	Connection	2

Ref. No.	Part No.	Description	No. Used
23	385620270	Connection	1
24	185516060	Regulator	1
26	385620200	Connection	2

INTERNATIONAL DECAL CROSS REFERENCE

JAPANESE DECAL KIT NO. 85–5110

DESCRIPTION	LOCATION	PART NUMBER	
		ENGLISH	JAPANESE
Decal Control	Skirt Panel	80–4220	84–6960
Decal Service	Skirt Panel	83–8900	84–7180
Panel Starting Fluid	Control Panel	83–9150	84–6660
Decal Parking Brake	Left Fender	84–1650	84–6860
Decal Warning	Fan Top Shroud	77–3100	84–6760
Decal Warning	Skirt Panel	83–9550	84–7080
Decal Warning	Hydraulic Tank Support	67–5360	84–7280
Decal Warning	Cutting Unit Top Shields	62–5070	84–6560
Decal Warning	Cutting Unit Lift Arms	55–4300	84–2940

ITALIAN DECAL KIT NO. 85–5120

DESCRIPTION	LOCATION	PART NUMBER	
		ENGLISH	ITALIAN
Decal Control	Skirt Panel	80–4220	84–6950
Decal Service	Skirt Panel	83–8900	84–7170
Panel Starting Fluid	Control Panel	83–9150	84–6650
Decal Parking Brake	Left Fender	84–1650	84–6850
Decal Warning	Fan Top Shroud	77–3100	84–6750
Decal Warning	Skirt Panel	83–9550	84–7070
Decal Warning	Hydraulic Tank Support	67–5360	84–7270
Decal Warning	Cutting Unit Top Shields	62–5070	84–6550
Decal Warning	Cutting Unit Lift Arms	55–4300	84–2910

SWEDISH DECAL KIT NO. 85–5060

DESCRIPTION	LOCATION	PART NUMBER	
		ENGLISH	SWEDISH
Decal Control	Skirt Panel	80–4220	84–6990
Decal Service	Skirt Panel	83–8900	84–7210
Panel Starting Fluid	Control Panel	83–9150	84–6690
Decal Parking Brake	Left Fender	84–1650	84–6890
Decal Warning	Fan Top Shroud	77–3100	84–6790
Decal Warning	Skirt Panel	83–9550	84–7110
Decal Warning	Hydraulic Tank Support	67–5360	84–7310
Decal Warning	Cutting Unit Top Shields	62–5070	84–6590
Decal Warning	Cutting Unit Lift Arms	55–4300	84–2870

GERMAN DECAL KIT NO. 85–5050

DESCRIPTION	LOCATION	PART NUMBER	
		ENGLISH	GERMAN
Decal Control	Skirt Panel	80–4220	84–6940
Decal Service	Skirt Panel	83–8900	84–7160
Panel Starting Fluid	Control Panel	83–9150	84–6640
Decal Parking Brake	Left Fender	84–1650	84–6840
Decal Warning	Fan Top Shroud	77–3100	84–6740
Decal Warning	Skirt Panel	83–9550	84–7060
Decal Warning	Hydraulic Tank Support	67–5360	84–7260
Decal Warning	Cutting Unit Top Shields	62–5070	84–6540
Decal Warning	Cutting Unit Lift Arms	55–4300	84–2900

INTERNATIONAL DECAL CROSS REFERENCE (Cont.)

SPANISH DECAL KIT NO. 85–5070

DESCRIPTION	LOCATION	PART NUMBER	
		ENGLISH	SPANISH
Decal Control	Skirt Panel	80–4220	84–6980
Decal Service	Skirt Panel	83–8900	84–7200
Panel Starting Fluid	Control Panel	83–9150	84–6680
Decal Parking Brake	Left Fender	84–1650	84–6880
Decal Warning	Fan Top Shroud	77–3100	84–6780
Decal Warning	Skirt Panel	83–9550	84–7100
Decal Warning	Hydraulic Tank Support	67–5360	84–7300
Decal Warning	Cutting Unit Top Shields	62–5070	84–6580
Decal Warning	Cutting Unit Lift Arms	55–4300	84–2900

FRENCH DECAL KIT NO. 85–5040

DESCRIPTION	LOCATION	PART NUMBER	
		ENGLISH	FRENCH
Decal Control	Skirt Panel	80–4220	84–6930
Decal Service	Skirt Panel	83–8900	84–7150
Panel Starting Fluid	Control Panel	83–9150	84–6630
Decal Parking Brake	Left Fender	84–1650	84–6830
Decal Warning	Fan Top Shroud	77–3100	84–6730
Decal Warning	Skirt Panel	83–9550	84–7050
Decal Warning	Hydraulic Tank Support	67–5360	84–7250
Decal Warning	Cutting Unit Top Shields	62–5070	84–6530
Decal Warning	Cutting Unit Lift Arms	55–4300	84–2800

DANISH DECAL KIT NO. 85–5130

DESCRIPTION	LOCATION	PART NUMBER	
		ENGLISH	DANISH
Decal Control	Skirt Panel	80–4220	84–6900
Decal Service	Skirt Panel	83–8900	84–7120
Panel Starting Fluid	Control Panel	83–9150	84–6600
Decal Parking Brake	Left Fender	84–1650	84–6800
Decal Warning	Fan Top Shroud	77–3100	84–6700
Decal Warning	Skirt Panel	83–9550	84–7020
Decal Warning	Hydraulic Tank Support	67–5360	84–7220
Decal Warning	Cutting Unit Top Shields	62–5070	84–6500
Decal Warning	Cutting Unit Lift Arms	55–4300	84–2930

DUTCH DECAL KIT NO. 85–5080

DESCRIPTION	LOCATION	PART NUMBER	
		ENGLISH	DUTCH
Decal Control	Skirt Panel	80–4220	84–6910
Decal Service	Skirt Panel	83–8900	84–7130
Panel Starting Fluid	Control Panel	83–9150	84–6610
Decal Parking Brake	Left Fender	84–1650	84–8610
Decal Warning	Fan Top Shroud	77–3100	84–6710
Decal Warning	Skirt Panel	83–9550	84–7030
Decal Warning	Hydraulic Tank Support	67–5360	84–7230
Decal Warning	Cutting Unit Top Shields	62–5070	84–6510
Decal Warning	Cutting Unit Lift Arms	55–4300	84–2920

INTERNATIONAL DECAL CROSS REFERENCE (Cont.)

FINNISH DECAL KIT NO. 85-5090

DESCRIPTION	LOCATION	PART NUMBER	
		ENGLISH	FINISH
Decal Control	Skirt Panel	80-4220	84-6920
Decal Service	Skirt Panel	83-8900	84-7140
Panel Starting Fluid	Control Panel	83-9150	84-6620
Decal Parking Brake	Left Fender	84-1650	84-6820
Decal Warning	Fan Top Shroud	77-3100	84-6720
Decal Warning	Skirt Panel	83-9550	84-7040
Decal Warning	Hydraulic Tank Support	67-5360	84-7240
Decal Warning	Cutting Unit Top Shields	62-5070	84-6520
Decal Warning	Cutting Unit Lift Arms	55-4300	84-7010

NORWEGIAN DECAL KIT NO. 85-5100

DESCRIPTION	LOCATION	PART NUMBER	
		ENGLISH	NORWEGIAN
Decal Control	Skirt Panel	80-4220	84-6970
Decal Service	Skirt Panel	83-8900	84-7190
Panel Starting Fluid	Control Panel	83-9150	84-6670
Decal Parking Brake	Left Fender	84-1650	84-6870
Decal Warning	Fan Top Shroud	77-3100	84-6770
Decal Warning	Skirt Panel	83-9550	84-7090
Decal Warning	Hydraulic Tank Support	67-5360	84-7270
Decal Warning	Cutting Unit Top Shields	62-5070	84-6570
Decal Warning	Cutting Unit Lift Arms	55-4300	84-7000

TORO PART NUMBER INDEX

Part No.	Description	Pg. No.	Ref. No.	Qty.
03440	Full Roller Kit	40	*	1
03445	Sectional Roller Kit	40	*	1
03446	Skid Kit	39	23	1
03447	Anti-Scalp Roller Kit	40	*	1
03450	Wiehle Roller Kit	40	*	1
3-0348	Bushing	33	3	6
3-0348	Bushing	37	9	2
3-0348	Bushing - Sleeve	26	7	4
3-0348	Bushing - Sleeve	27	17	2
3-6498	Washer	14	50	2
3-6498	Washer - Thrust	7	7	A/R
3-6498	Washer - Thrust	40	15	4
3-9274	Spacer - Wheel	44	2	8
4-7439	Wheel Assembly	44	31	4
5-0743	Spring - Extension	27	1	1
5-0743	Spring - Extension	26	17	2
5-2653	Cable Pulley Assembly	24	8	1
5-2655	Keeper - Cable	24	7	1
5-2656	Keeper - Cable	24	30	1
5-2891	Shaft - Wheel	44	28	4
5-7280	Key - Square	20	1	3
5-7290	Spring - Extension	13	6	1
10-6821	Brake Drum Assembly	13	18	2
10-6870	Hub - Wheel	13	19	2
10-7070	Key - Square	20	13	1
11-9760	Screw - Hex. Flange Hd.	12	25	3
12-7059	Reel Assy. - 5 Blade	38	*	1
12-7079	Reel Assy. - 5 Blade	38	57	1
12-7089	Reel Assembly - 8 Blade	35	*	1
12-7099	Reel Assembly - 8 Blade	35	54	1
12-9140	Decal	48	1	1
13-1699	Reel Assembly - 11 Blade	35	*	1
13-1709	Reel Assembly - 11 Blade	35	*	1
13-3649	Overhaul Kit	35	*	1
13-3649	Overhaul Kit	38	*	1
20-0150	Rod End Assembly	29	5	1
21-0140	Rod End Assembly	7	27	1
22-8330	Plug	23	1	2
22-8340	Spring	23	3	2
22-8350	Ball	23	4	2
22-8360	Pin - Cam	23	6	2
22-8370	Seat - Check Valve	23	5	2
22-8380	Retainer - Spring	23	10	2
22-8410	Spring	23	11	1
22-8420	Spool	23	8	1
22-8480	Snap Ring - Spool	23	13	1
22-8490	Snap Ring	23	14	1
22-8500	Seal - O-Ring	23	9	2
23-2140	Hose - Fuel	30	23	1
23-3030	Spacer	23	12	1
24-0760	Cooler - Oil	8	20	1
25-2380	Plate - Thrust	11	39	1
25-2390	Plate - Valve	11	40	1
25-2400	Gasket	11	43	1
25-2430	Pin - Straight	11	41	1
25-2450	Swash/Plate	11	37	1
25-2460	Plug	11	14	2
25-2470	Kit - Shim Pack	11	16	2
25-2480	Spring - Charge Relief	11	32	1
25-2490	Ball - Check Valve	11	47	2
25-2510	Washer	11	11	2
25-2530	Pin - Straight	11	26	1
25-2560	Cone - Relief Valve	11	18	1
25-2570	Spring - Relief Valve	11	17	1
25-2580	Shaft - Trunion	11	12	1
25-2620	Valve - By-Pass	11	4	1
25-2630	Ring	11	3	1
25-2640	Spring - Check Valve	11	48	2
25-2650	Plug - Check Valve	11	50	2
25-2680	Gerotor Assembly	11	25	1
25-2690	Housing - Charge Pump	11	21	1
25-3180	Kit - Check Valve	11	*	1
25-3210	Seal - Lip	11	10	2
26-3790	Nut - Lock	13	23	2
27-1850	Washer	35	57	1
27-1850	Washer	38	61	1
27-9870	Pin - Seat	2	24	1
28-3420	Cone - Charge Relief	11	33	1
28-6180	Pin	2	23	1
29-6120	Plate - Pump	12	5	1
29-6150	Spring - Leaf	12	9	1
29-6163	Switch	12	28	1
29-6163	Switch - Lift	24	4	1
29-6170	Spring - Extended Leaf	12	7	1
29-8870	Washer	34	12	1
29-8870	Washer - Flat	37	16	1
29-9080	Handle	48	3	1
29-9090	Hose - Handle	48	4	1
33-1300	Element Assembly	4	5	1
33-1310	Baffle	4	8	1
33-1320	Cup	4	9	1
33-1330	Nut Assembly	4	6	1
33-1340	Clamp Assembly	4	7	1
33-1350	Band Assembly	4	3	2
33-1350	Clamp Assembly	3	60	2
36-4310	Brush	48	5	1
36-7290	Spindle - Fan	18	49	1
37-9090	Belt - V	18	2	1
37-9590	Spring - Compression	2	22	1
39-9500	Washer - Flat	31	11	2
40-3790	Bottom Rail Assembly R.H.	31	40	I
40-3820	Bottom Rail Assembly L.H.	31	33	1
42-9850	Washer	19	61	1
43-1950	Lift Valve Assembly	22	4	1
43-8600	Spring - Compression	2	28	1
43-8610	Guide - Spring	2	27	1
43-8620	Guide - Pin	2	30	1
43-8860	Plunger - Switch	2	29	1
43-8870	Boot - Switch	2	32	1
43-9071	Seat Switch Assembly	3	*	1
44-2212	Light Assembly	5	45	1
46-8810	Stop - Spring	12	1	1
48-1800	Cylinder Block Kit	11	5	1
48-7700	Screw - Cap Hex. Hd.	18	14	6
48-7780	Screw - Cap Hex. Hd.	18	29	16
48-8010	Washer - Flat	18	41	4
48-9460	Screw - Cap Hex. Hd.	18	8	14
48-9590	Washer - Lock	18	28	16
49-8480	Shaft - Trunion	11	28	1
49-8520	Kit - Implement Relief	11	*	1
51-3150	Shim - Spring	12	6	1
52-2890	Bushing - Flanged (Nylon)	34	9	2
52-2890	Bushing - Flanged Nylon	37	13	2
52-2980	Pivot - Single Point Adjust	34	13	1
52-2980	Pivot - Single Point Adjust	37	17	1
52-2990	Capscrew - Spring Retainer	34	16	1
52-2990	Capscrew - Spring Retainer	37	19	1
52-3000	Arm - Spring	34	17	1
52-3000	Arm - Spring	37	18	1
54-0110	Element - Oil Filter	9	15	1
55-4300	Decal - Warning	26	9	2
55-4300	Decal - Warning	27	24	1
55-4330	Arm Rest Assembly L.H.	31		1
55-4331	Arm Rest Assembly R.H.	31	6	1
55-8380	Seat Wire Assembly	31	32	1
56-2230	Hose - Fuel	30	11	1
56-2520	Valve - Fuel Shut-Off	30	9	1
56-3800	Cushion - Seat Back	31	21	1
56-3810	Platform - Seat	31	1	1
56-3820	Cover - Seat Sack	31	17	1
56-3850	Screw - Hex. Hd. Machine	31	4	2
56-3870	Knob - Adjustment	31	3	1

*Not Illustrated

TORO PART NUMBER INDEX (Cont.)

Part No.	Description	Pg. No.	Ref. No.	Qty.
56–3880	Washer – Flat	31	2	2
56–3890	Nut – Hex.	31	7	1
56–3900	Spacer – Arm L.H.	31	26	1
56–3910	Spacer – Arm R.H.	31		1
56–3920	Bushing – Sleeve	31	27	4
56–3930	Washer – Flat	31	28	4
56–3940	Washer – Lock	31	29	4
56–3950	Screw – Cap Hex. Hd.	31	30	4
56–3960	Cover – Screw	31	5	4
56–3970	Carrier – Seat	31	8	2
56–3980	Clip – Rail	31	9	4
56–3990	Screw – Machine	31	39	2
56–4020	Screw – Machine	31	36	4
56–4030	Washer – Lock	31	37	4
56–4040	Plate – Back	31	12	1
56–4050	Spring – Extension	31	14	1
56–4060	Spring – Extension	31	24	1
56–4080	Clamp – Axle	31	10	2
56–4100	Bracket – Lever	31	22	1
56–4120	Cover	31	20	1
56–4130	Bumper	31	19	2
56–4150	Lever – Handle	31	16	1
56–4160	Washer – Flat	31	18	2
56–4170	Pin – Clevis	31	23	1
56–4190	Cap – Seat	31	25	2
56–7976	Clamp – Hydraulic Tube	16	7	2
56–9510	Bushing	36	17	4
56–9510	Bushing Assembly	28	10	2
56–9510	Bushing Assembly	39	18	2
56–9510	Bushing Assembly	38	45	2
56–9510	Bushing Assy.	34	38	2
56–9520	Bushing – Flanged	36	16	2
56–9520	Bushing – Flanged	39	17	1
56–9520	Bushing – Flanged	34	39	2
56–9520	Bushing – Flanged	38	46	2
56–9520	Bushing – Nyliner	28	16	1
57–4910	Screw – Special	34	44	10
57–4910	Screw – Special	38	47	10
57–5190	Screw – Adjustment	34	49	2
57–5190	Screw – Adjustment	38	51	2
57–5260	Pin – S.P.A.	34	22	1
57–5260	Pin – S.P.A.	37	27	1
57–5270	Spring – Compression	34	11	1
57–5270	Spring – Compression	37	15	1
57–5420	Screw – Shoulder	9	5	1
57–6390	Nut	19	60	1
59–2150	Taper Lock Bushing Assy.	10	20	1
61–0140	Pulley – Reel	20	4	3
61–0380	Cap – Full Roller	40	1	2
61–0380	Cap – Roller	36	11	2
61–0380	Cap – Roller	39	11	2
61–0400	Shaft – Full/Wiehle Roller	40	2	2
61–0400	Shaft – Roller	36	12	1
61–0400	Shaft – Roller	39	12	1
61–0410	Full Roller Assembly	36	*	1
61–0410	Full Roller Assembly	40	*	1
61–0410	Roller Assembly	39	*	1
61–0420	Support – HOC	36	5	4
61–0420	Support – HOC	39	6	2
61–0430	Bracket – Rear	36	15	2
61–0430	Bracket – Rear	39	16	2
61–0440	Bracket – Front	36	23	2
61–0500	Spacer – Bearing	37	32	1
61–0500	Spacer – Reel	34	32	1
61–0550	Shield – Top	37	23	2
61–0560	Shield – Top	34	27	1
61–0590	Scraper – Roller	41	1	3
61–0610	Guard – Side	37	37	1
61–0660	Reel Frame	38	58	1
61–0670	Rear Support	37	*	1
61–0710	Bushing Assembly	33	7	6
61–0750	Defector – Grass	44	10	2
61–0790	Screw – Cap Hex Hd.	36	4	4
61–0790	Screw – Cap Hex. Hd.	39	5	2
61–0860	Right Carrier Frame Assy.	33	10	1
61–0870	Rear Carrier Frame Assy.	33	1	1
61–0880	Left Carrier Frame Assy.	33	14	1
61–0890	Bracket – Carrier	34	33	1
61–0900	Bracket – Tensioner	37	3	1
61–0900	Bracket – Tensioner/Carrier	34	2	1
61–0910	Bracket – Angle	36	9	4
61–0910	Bracket – Angle	39	10	2
61–0930	Frame – Reel	34	7	1
61–0940	Sideplate – Adjust	37	29	1
61–0940	Sideplate – Adjust	34	40	1
61–0970	Housing – Bedbar Adj.	34	43	1
61–0970	Housing – Bedbar Adj.	38	44	1
61–1010	Bedbar Housing	34	48	1
61–1010	Bedbar Housing	38	50	1
61–1050	Front Support – L.H.	37	8	1
61–1070	Handle – Assembly	34	19	1
61–1070	Handle – Assembly	37	25	1
61–1130	Rear Grass Guard	34	24	1
61–1130	Rear Grass Guard	37	28	1
61–1190	Support – Basket (Front)	44	5	2
61–1210	Bedbar	34	46	1
61–1210	Bedbar	38	49	1
61–1250	Bracket – Basket L.H.	45	25	1
61–1260	Bracket – Basket R.H.	45	4	1
61–1270	Bracket – Basket L.H.	44	22	2
61–1280	Bracket – Basket R.H.	44	4	2
61–1320	Sideplate	34	5	1
61–1320	Sideplate – Reel	38	62	1
61–1330	Front Grass Basket Assy.	44	3	2
61–1340	Rear Grass Basket Assy.	45	14	1
61–1370	Spacer	33	5	6
61–1950	Washer – Bedbar	34	47	1
61–1950	Washer–Bedbar	38	53	1
61–1960	Axle – Wheel	29	7	1
61–2010	Pinion – Steering	7	15	1
61–2040	Rack – Steering	7	4	1
61–2070	Rod – Steering	7	5	1
61–2070	Rod – Steering	29	18	1
61–2080	Shaft – Steering	7	18	1
61–2090	Steering Column Assembly	7	21	1
61–2350	Support – Bearing	20	6	2
61–2370	Spacer	12	16	2
61–2430	Hub – Lift	24	45	1
61–2610	Arm – Traction	12	14	1
61–2790	Screen – Filler	9	8	1
61–2830	Lift Arm Assembly R.H.	26	*	1
61–2880	Lift Arm Assembly L.H.	26	8	1
61–2890	Lift Arm Assembly	27	29	1
61–2900	Shaft – Pivot R.H.	26	*	1
61–2930	Shaft – Pivot	27	7	1
61–2930	Shaft – Pivot L.H.	26	29	1
61–2990	Spacer – Switch	24	3	1
61–3000	Rod – Pivot	26	13	2
61–3000	Rod – Pivot	27	26	1
61–3160	Hanger – Basket (Front)	44	7	2
61–3170	Baffle – Grass	45	11	1
61–3170	Baffle – Grass	44	24	2
61–3210	Cable Pulley Assembly	24	22	3
61–3230	Spacer	24	24	3
61–3240	Keeper – Cable	24	21	1
61–3270	Spring – Compression	26	6	2
61–3280	Cover – End	44	14	4
61–3290	Cover – Middle	44	12	4
61–3360	Joint – Universal	7	17	1
61–3380	V–Belt	37	5	1
61–3380	V–Belt – Reel	34	4	1
61–3600	Tab – Lift	33	13	3

*Not Illustrated

TORO PART NUMBER INDEX (Cont.)

Part No.	Description	Pg. No.	Ref. No.	Qty.
61-3660	Front Support - R.H.	37	*	1
61-3790	Plate - HOC Front	36	10	2
61-3800	Plate - HOC Rear	36	3	2
61-3810	Plate - HOC	39	4	2
61-3820	Retainer - Cable	27	21	1
61-3830	Chain - Lift	24	33	2
61-3990	Parking Brake Assembly	13	5	1
61-7250	Boot	26	5	4
62-4290	O-Ring	11	44	2
62-4970	Sectional Roller Assembly	40	*	1
62-4990	Shaft - Anti-Scalp Roller	40	11	1
62-5070	Decal - Warning	35	59	1
62-5070	Decal - Warning	38	66	1
62-5070	Decal - Warning	44	11	2
62-5130	Flap - Rubber	45	16	1
62-5180	Bedknife - 7 In. Reel	34	45	1
62-5180	Bedknife - 7 In. Reel	38	48	1
62-5510	Rubber Bushing Assembly	34	8	2
62-5510	Rubber Bushing Assembly	37	12	2
62-7120	Spacer	35	60	1
62-7120	Spacer	38	65	1
62-7170	Spacer	2	43	1
62-7230	Hanger - Adjustable (Front)	44	17	2
62-7240	Cover - Spring	27	2	1
62-7250	Boot	27	18	2
62-7300	Chain	27	3	1
62-7400	Decal - TORO	1	10	1
62-7410	Wiehle Roller Assembly	40	*	1
62-7480	Bracket - Hanger	45	22	1
62-7660	Washer - Shim	40	6	2
62-7660	Washer - Shim (not used	36	24	2
62-7670	Shock Absorber - Seat	31	13	1
62-9510	Washer - Flat	18	50	1
63-1400	Guide - Cable	24	28	1
63-4220	Spring - Compression	45	21	1
63-5060	Roller - Anti-Scalp	40	17	2
63-5090	Anti-Scalp Roller Assembly	40	*	1
63-7430	Temperature Gauge Assy.	5	17	1
63-7590	Relay	5	34	1
63-7590	Relay	2	39	1
63-7620	Hose - Fuel	30	5	1
63-7620	Hose - Fuel	18	18	1
63-8140	Pulley - Idler	18	3	1
63-8410	Washer - Flat	9	10	3
63-8410	Washer - Flat	30	17	3
63-8740	Strap - Basket	45	17	1
65-4500	Seal - Snap Ring	15	14	1
65-4550	Valve - Check Ball	15	6	2
65-4560	Plug - Hex (Hollow)	15	3	1
65-4570	Seal - Square Ring	15	4	2
65-4580	Screw - Cap Hex Hd.	15	1	8
65-4590	Ring - Snap	15	21	1
65-4600	Washer - Thrust	15	19	2
65-4610	Bearing - Thrust	15	20	1
65-4620	Seal - O-Ring	15	12	1
65-4640	Key - Square	13	10	2
65-4640	Key - Square	15	11	1
65-4660	Shaft	15	10	1
65-4670	Body & Bearing Assembly	15	9	1
65-4680	Cover & Bearing Assembly	15	2	1
65-8270	Waher	19	57	1
66-2920	Spacer	12	36	1
66-2960	Cluster - Warning	5	7	1
66-3240	Cap - Radiator	8	9	1
66-5291	Hydraulic Motor Assembly	13	30	2
66-5400	Seat Assembly	32	*	1
66-6110	IGR Assembly	15	5	1
67-5360	Decal - Danger	3	57	1
67-5800	Flap - Basket Rear	45	23	1
67-5840	Nut - Jam	35	56	1
67-5840	Nut - Jam	38	60	1
67-5890	Hanger - Basket Rear	45	9	1
67-5910	Plate - Rear	45	8	1
67-5920	Support - Basket Rear	45	10	1
67-8020	Shaft - Pump	11	6	1
67-8030	Plug Assembly	11	19	1
67-8040	O-Ring	11	20	1
67-8050	Bearing - Needle	11	22	1
67-8060	Seal - Lip	11	23	1
67-8080	Bearing - Needle	11	42	1
67-8090	Cap - Pump End	11	45	1
67-9430	Plate - Comb	42	4	1
67-9450	Support - Comb	42	2	1
67-9470	Comb	42	3	1
67-9760	Washer	34	36	2
67-9760	Washer - Flat	37	33	2
68-4210	Spacer - Wheel	29	8	2
68-8990	Head - Oil Filter	9	19	1
69-0760	Bracket - Arm L.H.	32		I
69-0770	Bracket - Arm R.H.	32	9	1
69-1170	Glass - Sight	9	2	1
69-1180	Armrest	32	11	2
69-1260	Spacer	32	10	4
69-4780	Clamp - Light Cluster	5	43	1
70-8150	Plate - Valve	15	7	1
70-8621	Cap - Fuel Tank	30	12	1
70-8640	Cap - Hydraulic Reservoir	9	7	1
70-9840	Shoe - Brake	13	16	4
70-9850	Clip - Retaining	13	35	2
70-9860	Pin - Pivot Brake	13	25	2
70-9870	Plate - Brake	13	27	2
70-9880	Spring - Extension	13	17	4
71-1370	Spring - Compression	24	35	1
71-1380	Pin - Spring	24	34	1
71-1500	Brake Assembly	14	*	2
71-3382	Hose - Overflow	8	11	1
71-3590	Nut - Adjustment	40	8	8
71-3590	Nut - Adjustment	36	19	2
71-3590	Nut - Adjustment	39	20	2
71-3690	Pin - HOC	36	7	4
71-3690	Pin - HOC	39	8	2
72-4190	Pin - Cylinder Guide	24	12	1
72-4320	Switch - Seat	2	25	1
72-4770	Belt - V	43	2	3
74-0720	Tube - Manual	2	14	1
74-6110	Cam - Stop	12	35	1
74-9100	Pad - Forward	12	11	1
74-9110	Pad - Reverse	12	13	1
75-0540	Teather - Cap	9	4	1
75-4703	Hose - Fuel	30	15	1
75-4703	Hose - Fuel	18	25	1
75-4710	Harness - Warning Light	5	5	1
75-6820	Hourmeter	5	3	1
75-7730	Spacer	29	2	1
76-0020	Hydraulic Cylinder Assembly	24	37	1
76-0030	Repair Kit	25	*	1
76-0040	Piston	25	8	1
76-0050	Ring - Retaining	25	12	1
76-0090	Head	25	3	1
76-0300	Housing - Bushing	28	12	1
76-0350	Housing - Bushing	28	2	1
76-0360	Cup - Retainer	28	6	1
76-0370	Bolt - Shoulder	27	12	2
76-0370	Bolt - Shoulder	26	23	2
76-0390	Spacer	28	15	1
76-0410	Spring - Compression	28	7	1
76-1420	Wheel - Steering	7	23	1
76-2200	Footrest - Traction	1	5	1
76-2230	Seat Assembly	31	*	1
76-2240	Cushion - Seat Bottom	31	31	1
76-2260	Pad - Footrest Traction	1	6	1
76-2290	Spacer	38	68	1

*Not Illustrated

TORO PART NUMBER INDEX (Cont.)

Part No.	Description	Pg. No.	Ref. No.	Qty.
76-2320	Shaft	25	4	1
76-2330	Nut - Lock	25	5	1
76-2350	Seal/Retainer Assembly	15	*	1
76-2360	Body Seal Kit	15	*	1
76-2380	Shaft - Sectional Roller	40	18	1
76-2400	Roller - Sectional	40	14	2
76-2430	Bracket - Debris Cleaner	35	64	1
76-2430	Bracket - Debris Cleaner	38	73	1
76-2430	Scraper - Pulley	26	2	2
76-2440	Support - Debris Cleaner	35	65	1
76-2440	Support - Debris Cleaner	38	74	1
76-2460	Bearing Assembly	20	7	2
76-2490	Flange - Bearing (Lube)	34	31	2
76-2490	Flange - Bearing (Lube)	37	39	2
76-2500	Flange - Bearing	34	29	2
76-2500	Flange - Bearing	37	41	2
76-2670	Plate - Seat Mounting	2	8	1
76-6471	Trim - Control Panel Bottom	2	41	1
77-3100	Decal - Warning	8	4	1
80-4130	Bushing	3	59	4
80-4250	Adjuster - R.H.	32	7	1
80-4260	Adjuster - L.H.	32	3	1
80-4270	Pulley - Reel	34	3	1
80-4280	Pulley - Reel, 5 Blade	37	4	1
80-4290	Pulley - Reel	43	1	3
80-4690	Support - Scraper	42	7	2
80-6980	Latch - Hood	5	12	1
80-6990	Washer	24	18	4
80-7345	Hose	5	29	
81-1690	Clamp - Throttle Cable	18	21	1
82-2400	Wiehle Roller Weld Assy.	40	10	1
82-3110	Sensor - Temp	18	16	1
83-7340	Fork - Caster	29	6	1
83-7540	Engine Assembly	18	54	1
83-7550	Radiator Assembly	8	35	1
83-7570	Frame Assembly	7	12	1
83-7590	Pulley - Engine	18	55	1
83-7610	Hub - Fan	18	44	1
83-7620	Spacer - Fan	18	42	1
83-7630	Pulley - Fan	18	43	1
83-7690	Bracket - Idler	18	5	1
83-7700	Bracket - Alternator	18	34	1
83-7720	Reservoir - Hydraulic	9	1	1
83-7780	Bracket - Support	9	24	1
83-7790	Collar	20	11	2
83-7800	Sleeve	20	40	1
83-7810	Spacer	20	35	2
83-7820	Shaft - Drive	20	2	1
83-7830	Retainer - Clutch	20	15	1
83-7840	Shroud - Fan Top	8	5	1
83-7850	Shroud - Fan Bottom	8	32	1
83-7900	Belt Tensioner Assembly	27	11	2
83-7900	Belt Tensioner Assembly	26	24	2
83-7910	Rod	28	8	1
83-7930	Yoke	28	3	1
83-7950	Hood	1	11	1
83-7970	Fitting - Hydraulic Bulkhead	8	39	2
83-7980	Bracket - Radiator Rear	8	12	1
83-7990	Bracket - Radiator Front	8	33	1
83-8040	Cover - Left	8	8	1
83-8070	Bracket - Radiator Bottom	8	18	1
83-8080	Key - Square	20	38	1
83-8110	Panel - Left	2	45	1
83-8120	Panel - Right Rear	2	4	1
83-8150	Screen - Radiator	8	17	1
83-8180	Decal - Instrument Panel	5	2	1
83-8190	Panel - Control	2	5	1
83-8190	Panel - Instrument	5	1	1
83-8210	Panel - Front Left	8	22	1
83-8220	Bracket - Muffler	18	51	1
83-8230	Panel - Right Front	2	2	1
83-8270	Pedal - Traction	12	12	1
83-8280	Throttle Assembly	5	30	1
83-8320	Mount - Pump	10	12	1
83-8400	Pulley - Idler	20	20	1
83-8410	Pulley - Engine	18	48	1
83-8420	Pulley - Clutch	20	36	1
83-8470	Bracket - Engine Mount	19	56	2
83-8490	Belt - Drive	20	37	1
83-8500	Muffler	18	52	1
83-8510	Bracket - Fender L.H.	1	22	1
83-8540	Belt - Pump Drive	10	21	1
83-8550	Hose - Air Cleaner	2	49	1
83-8550	Hose - Air Intake	18	13	1
83-8590	Cable - Lift	24	19	1
83-8620	Bracket - Idler	20	18	1
83-8630	Yoke - Belt Tension	20	22	1
83-8720	Tank - Fuel	30	13	1
83-8760	Rod - Control	12	20	1
83-8770	Lever - Pump	12	23	1
83-8850	Grille - Front	1	29	1
83-8860	Shield - Grass Front R.H.	1	30	1
83-8880	Panel - Skirt	2	12	1
83-8890	Decal - Reelmaster 216-D	2	19	2
83-8900	Decal - Service Information	2	50	1
83-8920	Harness - Wire	6	1	1
83-9000	Battery	30	6	1
83-9020	Belt - V	18	38	1
83-9030	Foam - Top	8	36	1
83-9050	Hose - Radiator	8	34	1
83-9060	Hose - Radiator	8	28	1
83-9070	Hose - Coolant	18	11	1
83-9070	Hose - Radiator	8	31	1
83-9080	Connector - Bleed	8	30	1
83-9130	Keeper - Cable	24	27	1
83-9140	Clutch Assembly	20	39	1
83-9150	Decal - Starting Fluid	2	10	1
83-9170	Right Channel Assembly	2	44	1
83-9210	Cable - Battery Neg.	30	8	1
83-9210	Cable - Ground	18	31	1
83-9220	Cable - Battery Pos.	30	7	1
83-9240	Hold-Down - Battery	30	21	1
83-9250	Lever - Brake	13	36	2
83-9270	Pivot - Brake L.H.	13	40	1
83-9310	Pivot - Brake R.H.	13	*	1
83-9330	Shaft - Brake	13	41	1
83-9340	Shield - Grass	13	13	2
83-9350	Rod - Parking Brake	13	1	1
83-9390	Weight	46	1	1
83-9440	Hydraulic Tube Assembly	16	2	1
83-9450	Tube - Hydraulic	16	10	1
83-9470	Hydraulic Tube Assembly	16	1	1
83-9480	Tube - Hydraulic	16	8	1
83-9550	Decal - Warning	2	11	1
83-9600	Hose - Hydraulic	10	7	2
83-9600	Hose - Hydraulic	16	13	2
83-9620	Hose - Hydraulic	22	12	1
83-9620	Hose - Hydraulic	24	42	1
83-9630	Hose - Hydraulic	22	8	1
83-9630	Hose - Hydraulic	10	28	1
83-9640	Hose - Hydraulic	22	14	1
83-9640	Hose - Hydraulic	10	25	1
83-9650	Hose - Hydraulic	10	1	1
83-9650	Hose - Hydraulic	9	21	1
83-9651	Hose - Hydraulic	9	14	1
83-9660	Clevis	10	23	1
83-9670	Hose - Hydraulic	8	27	1
83-9670	Hose - Hydraulic	9	27	1
83-9680	Screw - Cap Hex. Hd.	20	27	1
83-9690	Spring - Compression	20	26	1
83-9700	Fender - L.H.	1	15	1
83-9710	Footrest - L.H.	1	17	1

*Not Illustrated

TORO PART NUMBER INDEX (Cont.)

Part No.	Description	Pg. No.	Ref. No.	Qty.
83-9720	Fender - R.H.	1	1	1
83-9730	Step - Foot	2	36	1
83-9740	Footrest - R.H.	1	4	1
83-9760	Bracket - Cylinder Support	24	1	1
83-9800	Shield - Grass Front L.H.	1	20	1
83-9810	Bushing - Flange	20	24	1
83-9840	Pad - Footrest L.H.	1	18	1
83-9880	Bracket - Fan Spindle	18	47	1
83-9910	Gasket - Muffler	19	58	1
83-9920	Bracket - Reservoir	9	13	1
83-9970	Latch - Hood	1	12	1
84-1650	Decal - Brake	1	19	1
84-1990	Rod - Adjusting	13	32	2
84-2000	Bracket - Brake	13	29	2
84-5560	Gear - Reel Shaft	47	5	3
84-5570	Plate - Attachment	47	*	2
84-5580	Plate - Attachment	47	3	1
84-5590	Gear - Driver	47	1	1
84-7770	Field & Rotor Assembly	21	1	1
84-7780	Armature Assembly	21	2	1
84-7780	Armature Assembly	22	2	1
84-8440	Bushing - Flange	24	11	2
85-4870	Support - Hinge	1	26	1
85-4890	Hinge - Hood	1	31	1
85-4910	Air Cleaner (Complete)	4	*	1
85-4910	Air Cleaner Assembly	2	47	1
85-4920	Hydraulic Pump Assembly	11	8	1
85-4920	Hydraulic Pump Assembly	10	30	1
85-4960	Pulley	10	16	1
85-4980	Switch Assembly	5	24	1
85-4990	Hose - Hydraulic	16	18	1
85-4990	Hose - Hydraulic	22	20	1
85-5000	Plate - Throttle	5	36	1
85-5010	Bracket - Right Front	3	54	1
85-5030	Hose - Hydraulic	10	10	1
85-5030	Hose - Hydraulic	8	24	1
85-5140	Foam - Hood	3	56	2
85-5160	Lever - Lift Valve	22	2	1
85-5170	Sleeve	8	41	1
85-5180	Trim	2	51	2
85-5300	Hose - Hydraulic	16	17	1
85-5310	Hose - Hydraulic	22	13	1
85-5310	Hose - Hydraulic	24	41	1
85-6540	Stud - Drive	13	26	8
217-60	Rim	13	21	2
218-461	Nut - Hex.	2	33	2
218-469	Fuse - 15 Amp.	5	10	2
218-489	Fuse Holder Assembly	5	9	2
218-500	Nut - Hex.	5	22	2
218-562	Lens - Light	5	47	1
218-596	Tab	12	37	2
219-17	Bulb - Light	5	6	4
219-18	Bulb - Light	5	46	1
231-122	Tire	29	13	1
231-127	Tire	13	20	2
232-14	Screw - Cap Hex. Hd.	46	*	3
232-27	Valve - Stem	13	24	2
232-47	Valve - Stem	29	12	1
233-37	Knob	22	1	1
237-7	Seal - O-Ring	2	31	1
237-21	Seal - O-Ring	22	18	2
237-21	Seal - O-Ring	14	47	3
237-22	O-Ring	11	2	1
237-22	Seal - O-Ring	22	7	4
237-22	Seal - O-Ring	24	40	2
237-30	Seal - O-Ring	16	3	4
237-30	Seal - O-Ring	10	6	4
237-30	Seal - O-Ring	13	7	2
237-30	Seal - O-Ring	2	26	1
237-30	Seal - O-Ring	8	38	2
237-37	Bumper - Rubber	2	6	2
237-42	Seal - O-Ring	23	2	2
237-42	Seal - O-Ring	22	5	1
237-42	Seal - O-Ring	10	27	2
237-42	Seal - O-Ring	24	38	2
237-65	Seal - O-Ring	16	11	2
237-65	Seal - O-Ring	13	44	2
237-71	Seal - O-Ring	2	42	1
237-78	Seal - O-Ring	22	10	2
237-78	Seal - O-Ring	16	16	2
237-78	Seal - O-Ring	14	46	2
237-79	Seal - O-Ring	10	4	4
237-79	Seal - O-Ring	9	18	1
237-80	Seal - O-Ring	13	9	4
237-81	Seal - O-Ring	9	3	4
237-86	O-Ring	11	15	2
237-95	O-Ring	11	27	1
240-11	Grommet	9	9	3
240-11	Grommet	30	16	3
240-13	Bumper	20	16	2
241-129	Rim	29	11	1
241-130	Spacer - Bearing	29	10	1
242-50	Nut - Lug	13	22	8
249-53	Clamp - J	18	15	1
2410-18	Plug	48	2	1
2410-73	Retainer - Teather	9	6	1
2411-52	End - Rod	12	17	1
2411-53	End - Rod	12	22	1
2412-34	Clamp - Hose	10	2	1
2412-34	Clamp - Hose	18	10	1
2412-34	Clamp - Hose	8	29	5
2412-36	Clamp - Hose	10	9	1
2412-36	Clamp - Hose	30	10	2
2412-36	Clamp - Hose	9	26	1
2412-39	Clamp - R	2	17	3
2412-39	Clamp - R	16	19	1
2412-39	Clamp - R	18	35	2
2412-41	Clamp - R	8	15	1
2412-67	Clamp - R	31	41	1
2412-74	Clamp - R	8	3	1
2412-92	Clamp - Hose	18	12	1
2412-92	Clamp - Hose	2	48	1
2412-108	Clamp - Hose	30	4	4
2412-108	Clamp - Hose	8	10	1
2412-108	Clamp - Hose	18	17	2
2412-133	Clamp - R	2	16	2
251-8	Bearing - Ball	11	35	1
251-77	Collar - Locking	20	9	2
251-259	Bearing - Ball	12	31	1
251-270	Bearing - Ball	47	2	1
251-321	Bearing - Wheel	29	9	2
251-331	Bearing	34	30	2
251-331	Bearing	37	40	2
251-337	Bearing - Ball	20	8	2
252-82	Bearing - Needle	11	9	2
252-112	Cone - Bearing (Inner)	40	12	2
253-84	Seal	34	20	1
253-84	Seal	37	22	1
253-152	Seal - Inner	40	3	2
253-152	Seal - Inner	39	13	2
253-152	Seal - Inner	36	22	2
253-153	Seal - Outer	40	7	6
253-153	Seal - Outer	36	20	2
253-153	Seal - Outer	39	21	2
254-78	Cone - Bearing	36	21	2
254-78	Cone - Bearing	39	22	2
254-78	Cone - Bearing (Outer)	40	5	6
254-79	Cup - Bearing	36	13	2
254-79	Cup - Bearing	39	14	2
254-79	Cup - Bearing (Outer)	40	4	8
256-1	Bushing - Sleeve	24	23	3
256-2	Bushing - Sleeve	24	44	1

*Not Illustrated

TORO PART NUMBER INDEX (Cont.)

Part No.	Description	Pg. No.	Ref. No.	Qty.
256–27	Bushing – Sleeve	7	19	2
256–90	Bushing – Flange	44	30	8
256–115	Washer – Thrust	26	12	2
256–115	Washer – Thrust	27	25	1
256–117	Bushing – Flange	7	8	4
256–117	Bushing – Flanged	40	16	4
256–173	Bushing – Sleeve	28	11	1
256–245	Bushing – Flange	7	9	2
256–247	Bushing – Flange	7	13	2
256–285	Bushing – Flange	33	6	12
256–287	Bushing – Flange	7	14	2
256–320	Bushing	1	32	2
257–5	Washer – Thrust	34	21	4
257–5	Washer – Thrust	37	21	4
257–6	Bearing – Thrust	34	18	2
257–6	Bearing – Thrust	37	26	2
2710–16	Connecting Link Assembly	22	3	1
281–1	Plug – Pipe	8	37	2
281–7	Plug – Pipe	8	1	1
282–2	Clevis	13	34	2
282–4	Clevis	27	5	1
282–4	Clevis	26	21	2
282–4	Clevis	24	31	4
283–1	Pin – Clevis	27	20	1
283–1	Pin – Clevis	13	37	2
283–2	Pin – Clevis	10	24	1
283–6	Pin – Clevis	27	6	1
283–6	Pin – Clevis	24	14	4
283–6	Pin – Clevis	26	20	2
283–8	Pin – Clevis	26	26	2
283–8	Pin – Clevis	27	32	1
283–40	Pin – Clevis	26	3	2
283–40	Pin – Clevis	27	14	2
283–42	Pin – Clevis	24	9	1
283–49	Pin – Clevis	2	7	2
283–55	Pin – Clevis	28	5	1
283–62	Pin – Clevis	18	19	1
283–78	Pin – Clevis	24	36	1
285–17	Plug – Pipe	11	1	6
302–5	Fitting – Grease	33	2	3
302–5	Fitting – Grease	29	3	2
302–5	Fitting – Grease	37	7	2
302–5	Fitting – Grease	40	9	8
302–5	Fitting – Grease	28	14	1
302–5	Fitting – Grease	34	15	1
302–5	Fitting – Grease	36	18	2
302–5	Fitting – Grease	39	19	2
302–5	Fitting – Grease	7	24	3
302–5	Fitting – Grease	20	33	2
302–11	Fitting – Grease	34	*	2
302–11	Fitting – Grease	37	*	2
302–18	Fitting – Grease	35	58	1
302–18	Fitting – Grease	38	64	1
302–60	Fitting – Grease	26	16	2
302–60	Fitting – Grease	27	30	1
321–2	Screw – Cap Hex. Hd.	33	11	6
321–5	Screw – Cap Hex. Hd.	13	15	8
321–6	Screw – Hex. Flange Hd.	12	10	2
321–8	Screw – Cap Hex. Hd.	44	26	8
321–8	Screw – Cap Hex. Hd.	2	52	2
321–12	Screw – Cap Hex. Hd.	30	2	1
321–13	Screw – Cap Hex. Hd.	10	18	3
321–14	Screw – Cap Hex. Hd.	18	40	4
321–23	Screw – Cap Hex. Hd.	22	16	2
322–2	Capscrew – Hex. Hd.	32	5	4
322–3	Screw – Cap Hex. Hd.	31	38	4
322–3	Screw – Cap Hex. Hd.	35	53	1
322–3	Screw – Cap Hex. Hd.	38	56	1
322–4	Screw – Cap Hex. Hd.	26	10	4
322–4	Screw – Cap Hex. Hd.	27	23	2
322–4	Screw – Cap Hex. Hd.	11	24	4
322–7	Screw – Cap Hex. Hd.	45	7	1
322–7	Screw – Cap Hex. Hd.	18	37	2
322–9	Screw – Cap Hex. Hd.	16	5	2
322–9	Screw – Cap Hex. Hd.	12	18	2
322–12	Screw – Cap Hex. Hd.	7	26	1
322–17	Screw – Cap Hex. Hd.	13	2	1
322–17	Screw – Cap Hex. Hd.	12	8	1
322–17	Screw – Cap Hex. Hd.	20	31	9
323–5	Screw – Cap Hex. Hd.	9	11	3
323–5	Screw – Cap Hex. Hd.	30	18	3
323–6	Screw – Cap Hex Hd.	36	1	8
323–6	Screw – Cap Hex. Hd.	39	2	5
323–6	Screw – Cap Hex. Hd.	37	6	8
323–6	Screw – Cap Hex. Hd.	34	23	6
323–7	Screw – Cap Hex. Hd.	39	1	3
323–7	Screw – Cap Hex. Hd.	41	2	6
323–7	Screw – Cap Hex. Hd.	45	2	4
323–7	Screw – Cap Hex. Hd.	47	4	6
323–7	Screw – Cap Hex. Hd.	42	5	2
323–7	Screw – Cap Hex. Hd.	27	8	1
323–7	Screw – Cap Hex. Hd.	44	20	8
323–7	Screw – Cap Hex. Hd.	26	28	2
323–7	Screw – Cap Hex. Hd.	35	55	5
323–7	Screw – Cap Hex. Hd.	38	59	2
323–9	Screw – Cap Hex. Hd.	37	1	1
323–9	Screw– Cap Hex. Hd.	32	13	2
323–10	Screw – Cap Hex. Hd.	46	5	2
323–10	Screw – Cap Hex. Hd.	46	2	3
323–11	Screw – Cap Hex. Hd.	11	46	4
323–12	Screw – Cap Hex. Hd.	37	10	1
323–13	Screw – Cap Hex. Hd.	24	46	1
323–15	Screw – Cap Hex. Hd.	20	19	1
323–17	Screw – Cap Hex. Hd.	24	20	2
325–6	Screw – Cap Hex. Hd.	29	1	1
325–7	Screw – Cap Hex. Hd.	10	13	2
325–10	Screw – Cap Hex. Hd.	33	8	2
325–11	Screw – Cap Hex. Hd.	13	28	8
325–18	Screw – Cap Hex. Hd.	10	15	1
3210–7	Screw – Cap Hex. Hd.	12	30	1
3211–4	Screw – Cap Hex. Hd.	34	34	2
3211–4	Screw– Cap Hex. Hd.	37	35	2
3212–34	Clamp – Hose	9	16	3
3217–6	Nut	34	42	1
3217–6	Nut	37	43	1
3217–6	Nut – Hex.	1	23	4
3217–16	Nut – Lock	12	3	2
3218–2	Nut – Hex.	1	9	2
3218–3	Nut – Jam	7	3	2
3218–3	Nut – Jam	41	4	6
3218–3	Nut – Jam	43	4	3
3218–3	Nut – Jam	35	68	1
3218–3	Nut – Jam	38	77	1
3218–6	Nut – Jam	28	9	1
3218–17	Nut – Jam	20	12	1
3218–18	Nut – Jam	34	50	2
3218–18	Nut–Jam	38	52	2
3219–14	Nut – Hex.	5	14	6
3220–2	Nut – Jam	12	19	2
3220–2	Nut – Jam	13	33	2
3220–5	Nut – Jam	7	6	1
3220–12	Nut – Jam	29	19	1
3220–20	Nut – Jam	12	21	1
3229–1	Bolt – Carriage	26	1	2
3229–1	Screw – Carriage	1	7	2
3229–11	Bolt – Carriage	35	63	1
3229–11	Bolt – Carriage	38	70	1
3230–1	Bolt – Carriage	32	15	4
3230–1	Screw – Carriage	30	19	2
3230–1	Screw – Carriage	18	33	1
3230–2	Bolt – Carriage	45	6	1
3230–2	Bolt – Carriage	44	9	4

*Not Illustrated

TORO PART NUMBER INDEX (Cont.)

Part No.	Description	Pg. No.	Ref. No.	Qty.
3230-5	Bolt – Carriage	44	8	2
3230-5	Screw – Carriage	46	3	2
3230-8	Bolt – Carriage	45	5	1
3230-9	Screw – Carriage	46	*	2
3230-20	Bolt – Carriage	34	37	10
3230-20	Bolt – Carriage	37	38	10
3230-22	Screw – Carriage	18	6	1
3230-23	Screw – Carriage	9	23	6
3230-23	Screw – Carriage	1	27	6
3230-27	Screw – Carriage	1	8	1
3231-2	Bolt – Carriage	36	14	4
3231-2	Bolt – Carriage	39	15	2
3231-22	Bolt – Carriage	8	23	6
3231-26	Screw – Carriage	18	7	1
3231-31	Bolt – Carriage	20	21	1
3234-4	Screw – Cap Hex. Hd.	8	7	2
3234-4	Screw – Hex. Flange Hd.	2	13	3
3234-4	Screw – Hex. Flange Hd.	20	29	2
3234-4	Screw – Hex. Washer Hd.	5	8	3
3234-4	Screw – Hex. Washer Hd.	24	10	1
3234-4	Screw – Hex. Washer Hd.	9	22	2
3234-5	Screw – Hex. Flange Hd.	2	1	24
3234-5	Screw – Hex. Washer Hd.	1	2	14
3234-5	Screw – Hex. Washer Hd.	13	4	2
3234-5	Screw – Hex. Washer Hd.	8	19	2
3234-5	Screw – Hex. Washer Hd.	18	32	1
3234-11	Screw – Hex. Flange Hd.	2	40	4
3234-11	Screw – Hex. Washer Hd.	46	4	2
3234-11	Screw – Hex. Washer Hd.	24	29	1
3234-17	Screw – Hex. Washer Hd.	8	21	4
3234-23	Screw – Hex. Flange	32	14	6
3234-24	Screw – Hex. Flange Hd.	18	26	4
3234-25	Screw – Hex. Washer Hd.	24	17	5
3234-28	Screw – Hex. Washer Hd.	8	13	8
3234-28	Screw – Hex. Washer Hd.	18	53	1
3234-32	Screw – Cap Hex. Hd.	20	5	4
3234-32	Screw – Cap Hex. Hd.	27	28	1
3234-32	Screw – Hex. Flange Hd.	26	14	2
3234-36	Screw – Hex. Flange Hd.	2	15	3
3242-4	Screw – Square Hd. Set	20	3	6
3243-6	Screw – Set Sq. Hd.	35	67	1
3243-6	Screw – Set Sq. Hd.	38	76	1
3245-35	Screw – Set	20	10	4
3246-9	Screw – Set	47	6	6
3247-6	Screw – Set	43	3	3
3249-11	Screw – Round Hd.	12	27	2
3250-35	Screw – Pan Hd.	24	6	2
3253-2	Washer – Lock	5	15	5
3253-3	Washer – Lock	33	12	6
3253-3	Washer – Lock	13	14	8
3253-3	Washer – Lock	10	19	3
3253-4	Washer – Lock	26	11	4
3253-4	Washer – Lock	27	22	2
3253-4	Washer – Lock	1	24	4
3253-4	Washer – Lock	35	52	1
3253-4	Washer–Lock	38	55	1
3253-5	Washer – Lock	34	25	2
3253-5	Washer – Lock	37	30	2
3253-21	Washer – Lock	44	15	4
3254-9	Washer – ITLW	12	2	2
3254-9	Washer – Lock Internal	24	5	2
3254-18	Washer – Lock I.T.L.W.	42	6	6
3254-20	Washer – Lock	5	23	1
3255-2	Washer – Lock	29	20	1
3255-2	Washer – Lock E.T.L.W.	35	61	1
3255-2	Washer – Lock E.T.L.W.	38	71	1
3255-7	Washer – ETLW	12	26	3
3255-8	Washer – Ext. Tooth Lock	32	4	4
3255-8	Washer – Lock E.T.L.W.	18	30	1
3256-2	Washer – Flat	44	27	8
3256-3	Washer – Flat	16	6	1
3256-3	Washer – Flat	37	36	5
3256-4	Washer – Flat	37	2	1
3256-6	Washer – Flat	26	15	2
3256-6	Washer – Flat	27	27	1
3256-14	Washer – Flat	5	16	2
3256-16	Washer – Flat	13	12	8
3256-22	Washer – Flat	8	6	2
3256-22	Washer – Flat	22	15	2
3256-22	Washer – Flat	3	53	2
3256-23	Washer	14	49	1
3256-23	Washer – Flat	18	9	23
3256-23	Washer – Flat	24	16	1
3256-23	Washer – Flat	44	18	6
3256-23	Washer – Flat	45	19	2
3256-23	Washer – Flat	1	25	4
3256-23	Washer – Flat	20	30	15
3256-23	Washer – Flat	31	34	4
3256-23	Washer – Flat	8	43	2
3256-24	Washer – Flat	46	6	2
3256-24	Washer – Flat	45	3	4
3256-24	Washer – Flat	27	16	1
3256-24	Washer – Flat	44	21	8
3256-24	Washer – Flat	20	25	2
3256-24	Washer – Flat	24	25	3
3256-24	Washer – Flat	18	27	16
3256-24	Washer – Flat	26	30	2
3256-24	Washer – Flat	12	34	1
3256-25	Washer – Flat	34	14	1
3256-25	Washer – Flat	37	20	1
3256-26	Washer – Flat	33	4	6
3256-26	Washer – Flat	7	10	2
3256-28	Washer – Flat	29	16	1
3256-35	Washer	42	9	6
3256-45	Washer – Flat	27	10	4
3256-45	Washer – Flat	26	19	4
3256-45	Washer Flat	38	69	2
3256-49	Washer	45	13	8
3256-49	Washer – Flat	44	13	32
3256-54	Washer – Flat	28	4	1
3256-56	Washer – Flat	34	51	1
3256-56	Washer – Flat	38	54	1
3257-32	Key – Woodruff	11	7	1
3257-32	Key – Woodruff	10	17	1
3258-19	Screw – Round Hd.	3	*61	2
3258-19	Screw – Round Hd.	4	2	2
3269-18	Rivet – Pop	45	15	10
3269-18	Rivet – Pop	44	23	20
3269-22	Rivet – Pop	45	12	4
3269-22	Rivet – Pop	44	25	8
3269-23	Rivet – Pop	44	16	24
3269-23	Rivet – Pop	45	24	8
3272-4	Pin – Cotter	2	9	2
3272-4	Pin – Cotter	24	13	1
3272-6	Pin – Cotter	7	1	1
3272-6	Pin – Cotter	10	14	1
3272-6	Pin – Cotter	29	14	1
3272-6	Pin – Cotter	27	19	1
3272-6	Pin – Cotter	13	31	5
3272-6	Pin – Cotter	24	43	1
3272-9	Pin – Cotter	18	23	1
3272-11	Pin – Cotter	27	4	1
3272-11	Pin – Cotter	26	22	2
3272-11	Pin – Cotter	24	32	5
3272-13	Pin – Cotter	27	13	2
3272-13	Pin – Cotter	26	27	2
3272-17	Pin – Cotter	26	25	2
3272-17	Pin – Cotter	27	33	1
3273-18	Screw – Hex. Socket Hd.	20	34	4
3274-90	Screw – Hex. Socket Hd.	5	13	2
3290-55	Rivet – Pop	36	8	6
3290-55	Rivet – Pop	39	9	4

*Not Illustrated

TORO PART NUMBER INDEX (Cont.)

Part No.	Description	Pg. No.	Ref. No.	Qty.
3290-282	Rivet – Pop	45	18	10
3290-322	Pin – Hair	27	31	1
3290-322	Pin – Hair	26	32	2
3290-379	Tie – Cable	20	41	1
3290-379	Tie – Cable	19	59	2
3290-432	Screw – Hex. Hd.	18	20	1
3290-467	Cotter – Hairpin	36	2	4
3290-467	Cotter – Hairpin	39	3	2
3290-467	Pin – Cotter Hair	1	28	2
3296-2	Nut – Lock	5	44	1
3296-4	Nut – Lock	24	15	1
3296-6	Nut – Lock	10	22	1
3296-13	Rivet – Pop	42	1	14
3296-16	Nut – Flange Lock	22	9	2
3296-16	Nut – Lock	12	4	2
3296-23	Nut – Flange Lock	20	28	4
3296-23	Nut – Lock	10	11	3
3296-23	Nut – Lock	13	42	8
3296-28	Nut – Lock	7	11	2
3296-29	Nut – Flange Lock	7	20	1
3296-29	Nut – Flange Lock	20	32	6
3296-29	Nut – Lock	16	9	2
3296-29	Nut – Lock	44	19	6
3296-29	Nut – Lock	45	20	3
3296-29	Nut – Lock	12	32	3
3296-29	Nut – Lock	34	41	11
3296-29	Nut – Lock	37	42	11
3296-29	Nut – Lock	8	42	2
3296-39	Nut – Flange Lock	22	17	1
3296-39	Nut – Flange Lock	24	26	3
3296-39	Nut – Lock	34	1	8
3296-39	Nut – Lock	45	1	3
3296-39	Nut – Lock	36	6	16
3296-39	Nut – Lock	44	6	8
3296-39	Nut – Lock	39	7	9
3296-39	Nut – Lock	42	8	2
3296-39	Nut – Lock	27	15	1
3296-39	Nut – Lock	20	17	2
3296-39	Nut – Lock	26	31	2
3296-39	Nut – Lock	38	67	12
3296-42	Nut – Lock	13	11	8
3296-42	Nut – Lock	8	40	2
3296-51	Nut – Lock	29	17	1
3296-59	Nut – Lock	41	3	6
3296-59	Nut – Lock	27	9	2
3296-59	Nut – Lock	33	9	2
3296-59	Nut – Lock	26	18	2
3296-59	Nut – Lock	12	33	1
3296-59	Nut – Lock	38	63	1
3296-62	Nut – Lock	34	10	1
3296-62	Nut – Lock	37	14	1
32104-82	Screw – Hex. Washer Hd.	1	21	5
32104-116	Screw – Hex. Washer Hd.	8	2	8
32105-1	Screw – Hex. Hd.	5	42	1
32107-11	Nut – Square	3	*62	2
32107-11	Nut – Square	4	4	2
32120-10	Ring – Retaining	18	45	1
32120-11	Ring – Retaining	11	36	1
32120-15	Ring – Retaining	11	34	1
32120-64	Ring – Snap	44	1	8
32121-6	Pin – Roll	12	15	1
32121-6	Pin – Roll	2	21	1
32121-6	Pin – Roll	13	39	2
32121-9	Pin – Roll	28	13	1
32121-10	Pin – Roll	7	22	1
32121-15	Pin – Roll	7	16	2
32121-23	Pin – Roll	28	1	1
32121-24	Pin – Roll	12	24	1
32121-34	Pin – Dowel	10	29	1
32121-36	Pin – Roll	34	6	4
32121-36	Pin–Roll	37	11	4
32121-91	Pin – Coiled Spring	11	38	3
32128-10	Nut – Flange Lock	35	66	1
32128-10	Nut – Flange Lock	38	75	1
32128-14	Nut – Flange Lock	1	13	2
32128-19	Nut – Flange	32	12	2
32128-20	Nut – Flange Lock	2	46	4
32128-20	Nut – Lock	14	48	2
32128-21	Nut – Flange Lock	35	62	1
32128-21	Nut – Flange Lock	38	72	1
32128-25	Nut – Flange Lock	31	35	4
32128-25	Nut – Hex. Flange	32	6	4
32128-33	Nut – Flange Lock	1	3	2
32128-33	Nut – Flange Lock	26	4	2
32128-33	Nut – Flange Lock	20	14	2
32128-33	Nut – Flange Lock	5	31	3
32128-33	Nut – Flange Lock	2	34	5
32128-43	Nut – Flange Lock	18	1	5
32128-43	Nut – Flange Lock	24	2	7
32128-43	Nut – Flange Lock	8	16	6
32128-43	Nut – Flange Lock	20	23	2
32128-43	Nut – Flange Lock	2	37	4
32128-44	Nut – Flange Lock	18	4	5
32128-44	Nut – Flange Lock	1	16	13
32128-44	Nut – Flange Lock	2	18	10
32128-44	Nut – Flange Lock	30	20	3
32128-44	Nut – Flange Lock	8	26	4
32128-44	Nut – Hex. Flange Hd.	9	12	6
32128-44	Nut – Lock	13	3	2
32136-4	Nut – Castle	7	2	1
32136-4	Nut – Castle	29	15	1
32141-84	Screw – Cap Hex. Hd.	7	25	2
32144-10	Screw – Cap Hex. Hd.	37	24	6
32144-10	Screw – Hex. Washer Hd.	34	26	4
32144-18	Screw – Hex. Hd.	5	4	2
32144-39	Screw – Pan Hd.	5	41	2
32148-7	Insert – Threaded	2	3	8
32148-7	Insert – Threaded	1	33	3
32148-8	Insert – Threaded	8	14	3
32148-8	Insert – Threaded	1	34	1
32148-8	Insert – Threaded	3	58	1
32148-14	Insert – Threaded	7	28	1
32149-9	Nut – Flange Lock	5	37	2
32151-46	Ring – Retaining	11	13	2
32153-4	Nut–Lock	44	29	8
340-2	Fitting – Hydraulic Straight	24	47	1
340-17	Fitting – Hydraulic 90°	13	43	2
340-20	Fitting – Hydraulic Tee	22	21	1
340-77	Fitting – Hydraulic 90°	22	6	1
340-87	Fitting – Hydraulic 45°	24	39	1
340-92	Fitting – Hydraulic Straight	22	11	1
340-99	Fitting – Hydraulic 90°	10	26	2
340-101	Fitting – Hydraulic 45°	10	5	2
340-103	Fitting – Hydraulic 45°	14	45	1
340-103	Fitting – Hydraulic 45°	22	22	1
340-105	Fitting – Hydraulic 90°	13	8	2
340-110	Fitting – Hydraulic 90°	22	19	1
340-127	Nut – Bulkhead	8	25	2
340-140	Fitting – Hydraulic Tee	14	*	1
340-162	Fitting – Hydraulic 90°	16	12	1
340-163	Fitting – Hydraulic 90°	16	4	1
353-987	Fitting– Hydraulic 90°	9	17	1
354-77	Hydraulic Test Port Fitting	16	15	2
354-79	Cap – Test Port	16	14	2
354-120	Fitting – Hydraulic 90°	10	8	1
354-120	Fitting – Hydraulic 90°	9	25	1
354-127	Fitting – Hydraulic 45°	9	20	2
354-128	Fitting – Hydraulic 90°	10	3	1

*Not Illustrated

IDENTIFICATION AND ORDERING

MODEL AND SERIAL NUMBERS

The Reelmaster 216–D has two identification numbers; a model number and a serial number. The two numbers are stamped on a plate which is located on the main frame under the seat. In any correspondence concerning the Reelmaster 216–D, supply model and serial numbers to assure that correct information and replacement parts are obtained.

To order replacement parts from an Authorized TORO Service Dealer, supply the following information:

1. Model and serial number of the Reelmaster 216–D.
2. Part number, description, and the quantity of part(s) desired.

NOTE: Do not order by reference number if a parts catalog is being used; use the PART NUMBER.

TABLE OF CONTENTS

Description	Page
Hood & Grille	1
Skirt Assembly	2–3
Air Cleaner Assembly	4
Instrument Panel Assembly	5
Electrical Schematic	6
Frame Assembly	7
Radiator Assembly	8
Hydraulic Reservoir & Filter Assembly	9
Hydraulic Pump Installation Assembly	10
Hydraulic Pump Assembly No. 85–4920	11
Traction Control Assembly	12
Front Wheel Assembly	13–14
Hydraulic Drive Motor No. 66–5291	15
Drive Motor Plumbing Assembly	16
Hydraulic Schematic	17
Engine Installation Assembly	18–19
Reel Drive Assembly	20
Electric Clutch Assembly No. 83–9140	21
Cutting Unit Lift Valve Installation Assembly	22
Control Valve No. 43–1950	23
Cutting Unit Lift Assembly	24
Hydraulic Cylinder No. 76–0020	25
Front Cutting Unit Lift Arm Assembly	26
Rear Cutting Unit Lift Arm Assembly	27
Belt Tensioner Assembly No. 83–7900	28
Rear Wheel Assembly	29
Fuel System Assembly	30
Seat Assembly Model No. 30797 (Optional)	31
Seat Assembly Model No. 30796 (Optional)	32
Cutting Unit Carrier Frame Assembly (Floating Cutting Unit Suspension)	33
8 & 11 Blade Cutting Unit Reel Assembly	34–35
8 & 11 Blade Cutting Unit Roller Assembly (Floating Suspension)	36
5 Blade Cutting Unit Reel Assembly (Fixed Suspension)	37–38
5 Blade Cutting Unit Roller Assembly (Fixed Suspension)	39
Cutting Unit Roller Options	40
Cutting Unit Roller Scraper Kit Part No. 60–9590 (Optional)	41
Comb Kit Part No. 67–9400 (Optional)	42
Large Pulley Kit Part No. 67–9540 (Optional)	43
Grass Collection System Model No. 03433 (Optional) (Front Cutting Unit Basket Assembly)	44
Grass Collection System Model No. 03433 (Optional) (Rear Cutting Unit Basket Assembly)	45
Weight Kit No. 83–9370	46
Backlap Kit No. 84–5510	47
Special Tools	48
Cylinder Block Assembly	49
Crankshaft Assembly	50
Cylinder Head Assembly	51
Rocker Arm Assembly	52
Camshaft Assembly	53
Timing Cover Assembly	54
Oil Pump Assembly	55
Fuel Injection System Assembly	56
Injection Pump Assembly	57–58
Flywheel Housing Assembly	59
Flywheel Assembly	60
Starter Installation Assembly	61
Starter Assembly	62
Oil Sump Assembly	63
Valve Cover Assembly	64
Oil Filter Assembly	65
Front Drive Pulley Assembly	66
Water Pump Assembly	67
Alternator Assembly	68
Timing Cover Plate Assembly	69
Exhaust Manifold Assembly	70
Low Pressure Fuel System Assembly	71
Lift Pump Assembly	72
Fuel Filter Assembly	73
Cold Start System Assembly	74
Engine Lifting Tab Assembly	75
Throttle Stop Assembly	76
Recorder Assembly	77
Electrical Componant Assembly	78
International Decal Cross Reference	79–81
TORO Part Number Index	82–89

MAINTENANCE RECORD

Date								

MAINTENANCE RECORD

Date								