Form Number 3357-395 Rev B

21in Heavy-Duty
Recycler®/Rear Bagger Lawn Mower

Model No. 22195 - 270000001 and up.

Parts Catalog

Ordering Replacement Parts
To order replacement parts, please supply the part number, the quantity, and the description of each part desired.

Understanding Reference Numbers
Each Identified part in an illustration has a reference number. The reference number for a part also appears in the parts list, along with other information about the part.

This catalog uses two special reference number formats, one to indicate parts in a service assembly and another to indicate the quantity of a given part in an illustration.

Service Assembly Reference Numbers
Parts in service assemblies have reference numbers in the form a:b. The a represents the reference number of the entire service assembly and the b represents a sequential number unique to each part within the service assembly.

For example, a wheel assembly might be identified by reference number 6, the tire by 6:1, the valve by 6:2, and the wheel by 6:3. When you order the assembly identified by reference number 6, you receive all parts identified by reference numbers 6:1, 6:2, and 6:3. However, you may also order any part individually. Reference numbers of this type appear in illustrations and in part lists.

Reference Numbers Indicating Quantity
In an illustration, if a reference number indicates more than one part, the reference number has the form nX y. The n represents the quantity of the part, the X is the multiplication symbol, and the y represents the reference number.

For example, in an illustration, the reference number 2X 37 means that two of the parts identified by reference number 37 are indicated.

Register your product at www.Toro.com

© The Toro Company - 2007
All Rights Reserved

Contents

Description	Page
Housing Assembly	3
Housing Assembly No. 98-7139	4
Front Wheel and Tire Assembly No. 100-2870	5
Gear Case Assembly No. 74-1861	6
Engine and Fuel Tank Assembly	7
Handle Assembly	8
Rear Drive and Wheel Assembly	9
Rear Wheel Assembly No. 100-2860	10
Grass Bag Assembly No. 106-0975	11
Cylinder Head Assembly Honda GXV160UH2 A1T	12
Cylinder Barrel Assembly Honda GXV160UH2 A1T	13
Crankshaft and Piston Assembly Honda GXV160UH2 A1T	14
Camshaft Assembly Honda GXV160UH2 A1T	15
Recoil Starter Assembly Honda GXV160UH2 A1T	16
Fan Cover Assembly Honda GXV160UH2 A1T	17
Carburetor Assembly Honda GXV160UH2 A1T	18
Air Cleaner Assembly Honda GXV160UH2 A1T	19
Muffler Assembly Honda GXV160UH2 A1T	20
Fuel Tank Assembly Honda GXV160UH2 A1T	21
Flywheel Assembly Honda GXV160UH2 A1T	22
Control Assembly Honda GXV160UH2 A1T	23
Label and Tool Assemblies Honda GXV160UH2 A1T	24

Part Description Abbreviations

Part descriptions in this catalog may include the following abbreviations.

AR	as required
ASM	assembly
BBC	blade brake clutch
CARR	carriage
DEG	degrees
EXT	external
FH	flat head
GA	gauge
HD	heavy-duty
HF	hex flange
HH	hex head
HHF	hex head flange
HHFTF	hex head flange thread forming
HJ	hex jam
HLH	hex lag head
HOC	height-of-cut
HSBH	hex socket button head
HSFH	hex socket flat head
HSH	hex socket head
HWH	hex washer head
HWHTF	hex washer head thread forming
HYD	hydraulic
LH	left hand
NI	nylon insert
NPTF	national pipe thread fine
PFH	phillips flat head
PPH	phillips pan head
PPHTF	phillips pan head thread forming
PRH	phillips round head
PTH	phillips truss head
PTO	power-take-off
RH	right hand
ROPS	roll-over protection system
SFH	slotted fillister head
SHH	slotted hex head
SHWH	slotted hex washer head
SPH	slotted pan head
SQH	square head
SRH	slotted round head
STD	standard
TAP	self tapping
TTH	torx truss head

Footnotes

❶ Not illustrated

❷ Not serviced separately

❸ Obtain from your local Honda dealer

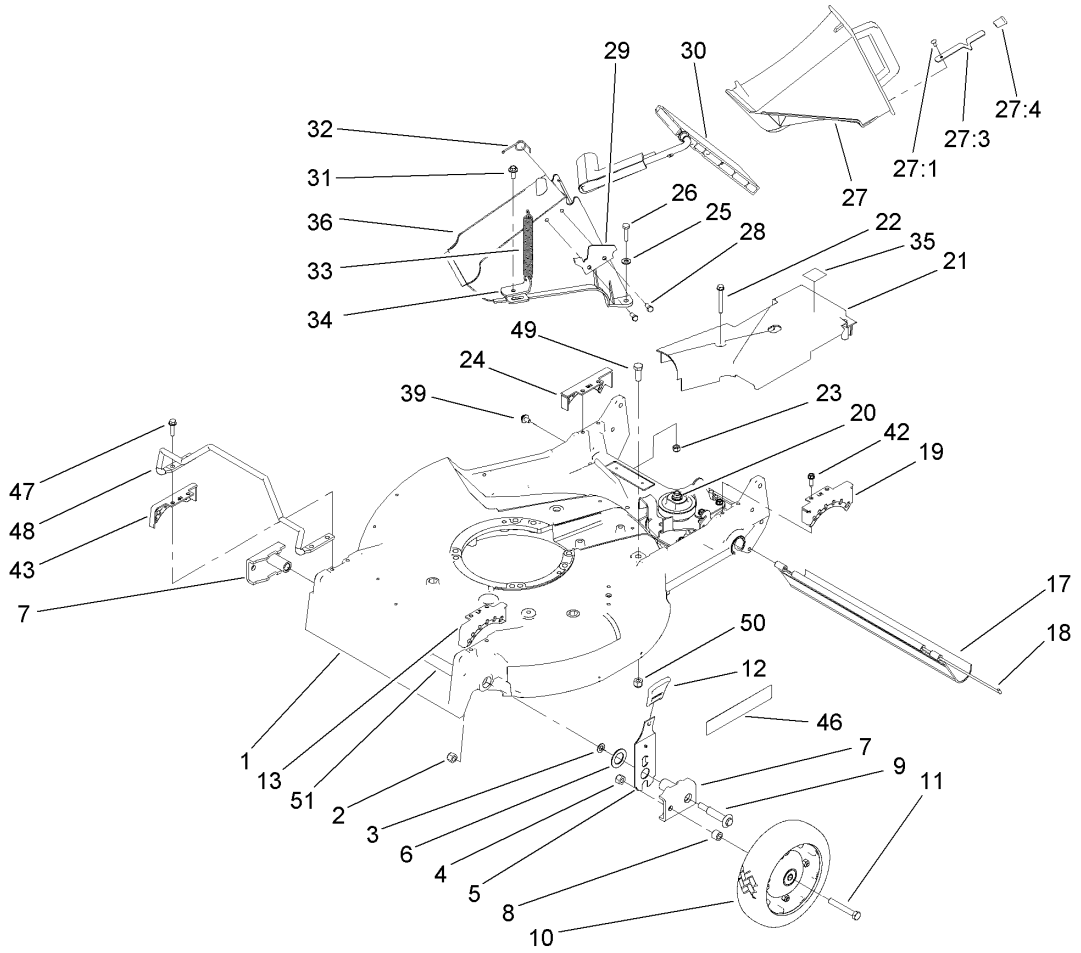

Housing Assembly

Ref	Part No.	Qty.	Description
1	98-7139	1	Housing
2	3296-6	2	Nut-Lock
3	40-1940	2	Washer
4	32152-2	2	Nut-Lock, Cone
5	110-0537	2	Spring Arm ASM
6	257-3	2	Washer-Thrust
7	61-8300	2	Arm-Pivot, Front
8	52-2480	2	Spacer-Wheel
9	27-6232	2	Bolt-Wheel
10	100-2870	2	Wheel And Tire ASM
11	323-12	2	Screw-HH
12	110-0549	2	Knob-HOC
13	49-8760	1	Quadrant-Front, LH
17	112-9989	1	Shield-Trailing
18	33-3208	1	Rod-Shield
19	49-8740	1	Quadrant-Rear, LH
20	74-1861	1	Gear Case ASM
21	74-1770	1	Cover-Belt
22	37-7260	2	Screw-HHFTF
23	3296-42	2	Nut-Lock, NI
24	49-8750	1	Quadrant-Rear, RH
25	3256-22	2	Washer-Flat
26	321-8	2	Screw-HH
27	77-0500	1	Discharge Plug ASM

Ref	Part No.	Qty.	Description
27:1	3295-35	1	Rivet-Head, Flat
27:3	76-4640	1	Latch-Plug, Discharge
27:4	76-4650	1	Grip-Latch
28	46-8090	2	Screw-Plastite
29	93-3154	1	Latch-Plate
30	93-7351	1	Discharge Door ASM
31	46-6811	1	Screw-HWH
32	80-3770	1	Retainer-Door
33	76-4660	1	Spring-Door
34	71-9350	1	Bracket-Spring
35	52-2620	1	Label-Grease
36	82-9152	1	Tunnel-Discharge
39	46-6810	1	Screw And Washer ASM
42	49-2040	4	Screw-HWHTF
43	49-8770	1	Quadrant-Front, RH
46	106-0689	1	Decal
47	32144-86	4	Screw-HWHTF
48	99-6722	1	Guard-Engine
49	323-6	2	Screw-HH
50	3296-39	2	Nut-Lock, NI
51	68-7410	1	Decal-Blade

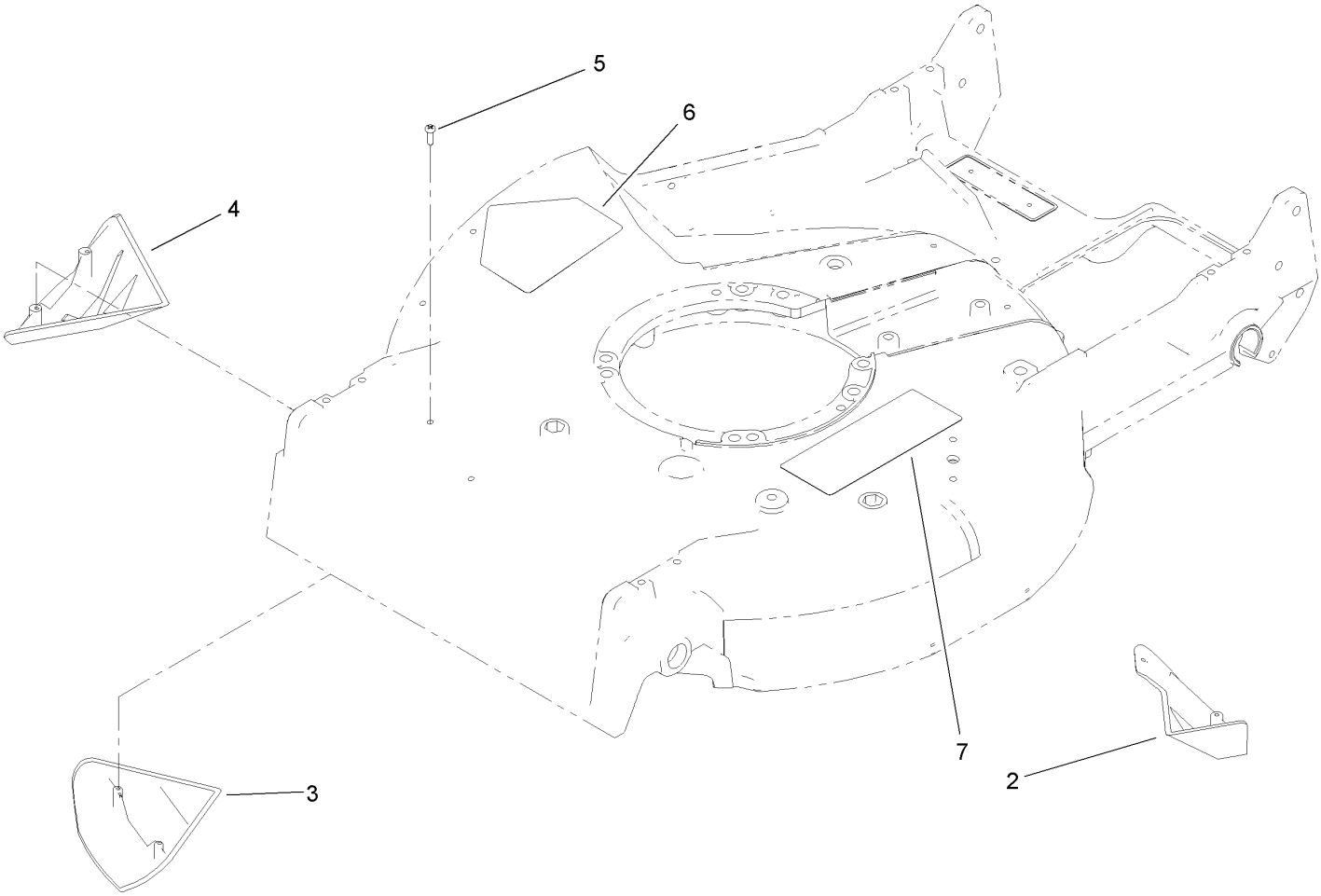

Housing Assembly No. 98-7139

Ref	Part No.	Qty.	Description
2	92-1750	1	Kicker-Rear
3	92-1720	1	Kicker-Front
4	92-1730	1	Kicker-RH
5	32144-111	6	Screw-PPH
6	39-5770	1	Decal-Danger
7	104-8589	1	Decal-Warning

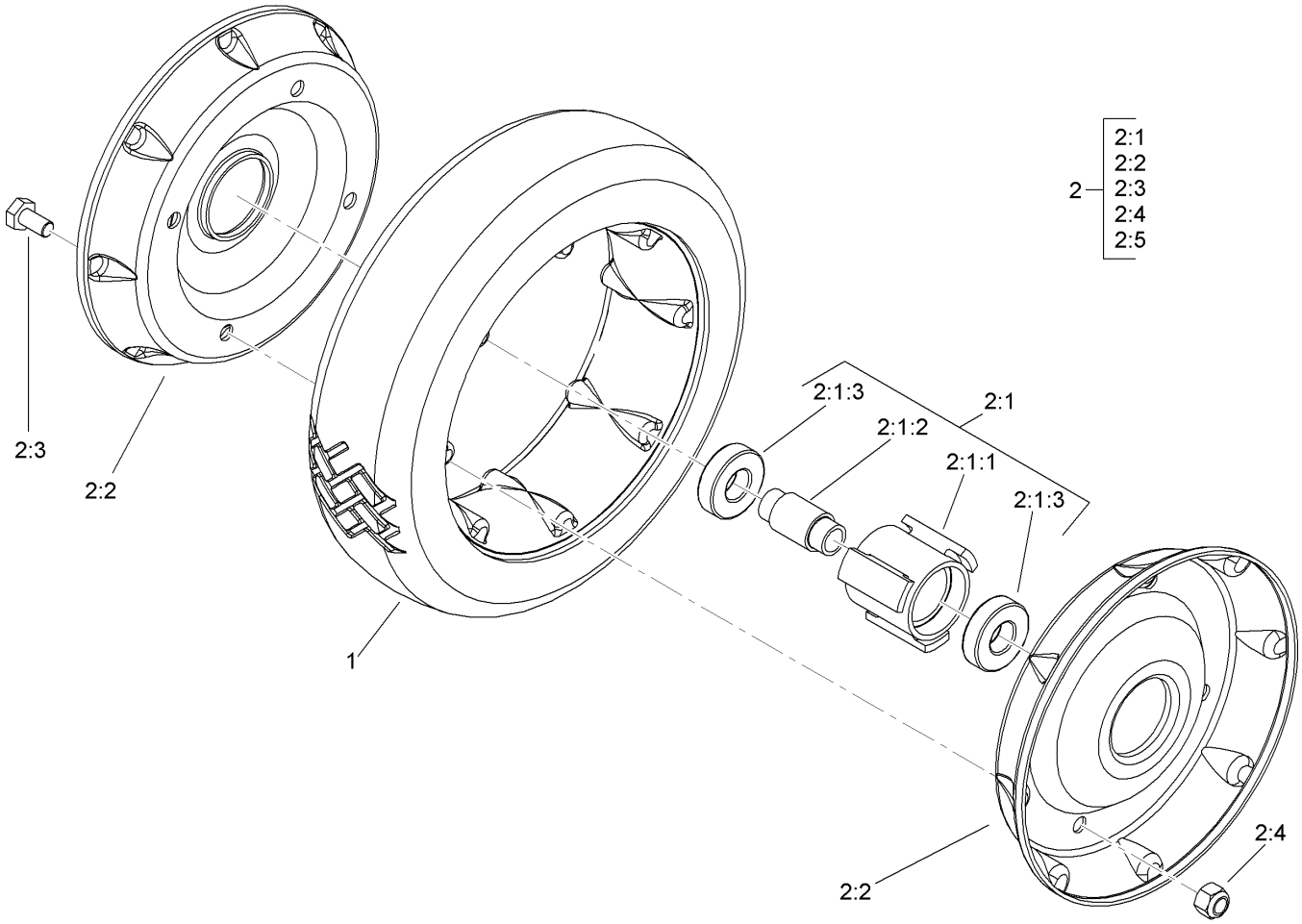

Front Wheel and Tire Assembly No. 100-2870

Ref	Part No.	Qty.	Description
1	53-7740	1	Tire
❷2		1	Wheel ASM
❷2:1		1	Hub And Bearing ASM
2:1:1	52-2410	1	Hub-Bearing
2:1:2	52-2440	1	Spacer-Bearing
2:1:3	52-2450	2	Bearing-Wheel
2:2	53-7780-06	2	Plate-Wheel, Half
2:3	321-2	4	Screw-HH
2:4	3296-42	4	Nut-Lock, NI

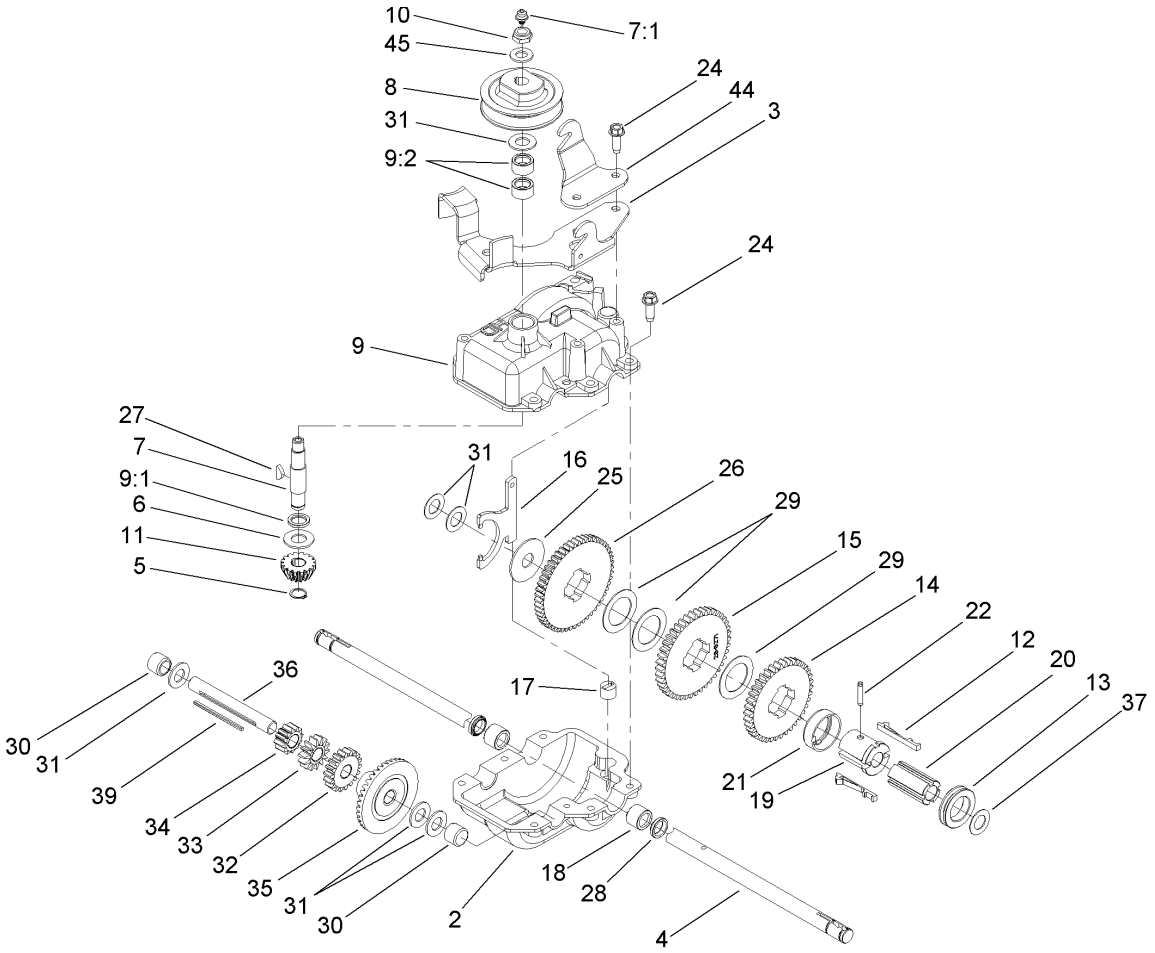

Gear Case Assembly No. 74-1861

Ref	Part No.	Qty.	Description
2	74-1920	1	Case-Gear, Lower
3	49-8461-03	1	Bracket-Guide, Belt
4	74-1890	1	Shaft-Output
5	32151-57	1	Ring-Retaining
6	47-2910	1	Washer-Thrust
7	13-5149	1	Input Shaft ASM
7:1	302-63	1	Zerk
8	39-6740	1	Pulley
9	13-9739	1	Upper Gearcase ASM
9:1	47-7260	1	Seal
9:2	47-7270	2	Bearing
10	3296-5	1	Nut-Lock
11	39-6660	1	Pinion-Bevel
12	29-9330	2	Key-Shift
13	29-9340	1	Collar-Shift
14	42-4740	1	Gear-38T
15	29-9271	1	Gear-42T
16	60-8870	1	Yoke-Shift
17	29-9570	1	Bushing-Yoke
18	47-6730	2	Seal-Oil
19	55-8010	1	Sleeve-Gear
20	39-6720	1	Sleeve
21	55-8020	1	Retainer-Key
22	3285-19	1	Pin-Groove

Ref	Part No.	Qty.	Description
24	49-2040	6	Screw-HWHTF
25	29-9690	1	Washer
26	46-3560	1	Gear
27	3257-1	2	Key-Woodruff
28	48-2060	2	Bearing-Roller
29	36-4770	3	Washer
30	252-103	2	Bearing-Closed
31	36-4792	4	Washer-Thrust
32	39-6650	1	Gear-18T
33	46-3550	1	Gear-14T
34	46-3540	1	Gear-12T
35	74-1760	1	Gear-Bevel
36	53-7950	1	Shaft-Intermediate
37	36-4780	3	Washer-Plain
39	39-7842	1	Key
44	74-1750-03	1	Bracket-Engage, Traction
45	3256-45	1	Washer-Flat

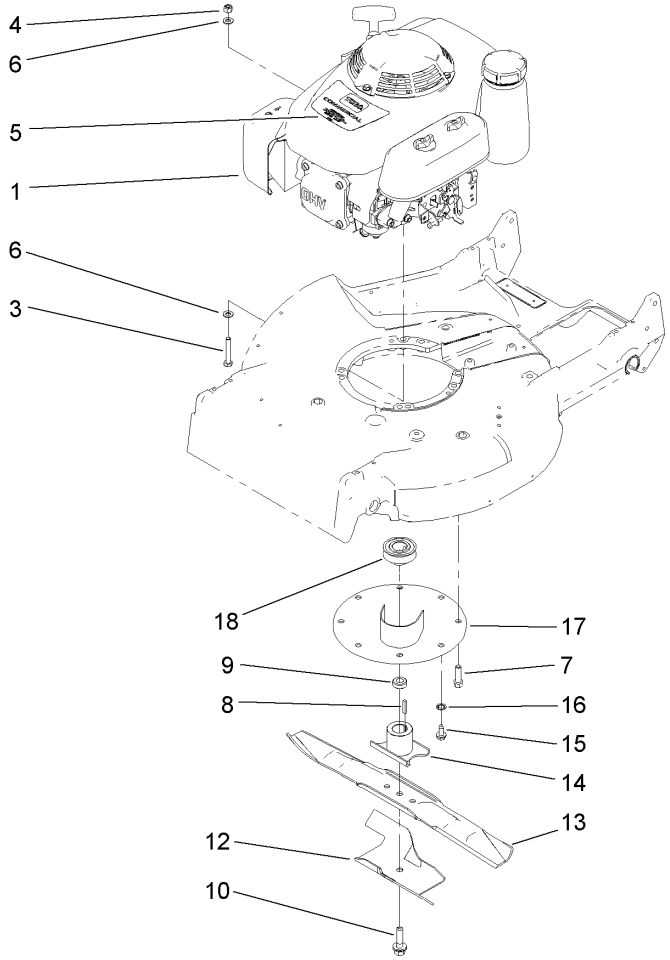

Engine and Fuel Tank Assembly

Ref	Part No.	Qty.	Description
1	109-5895	1	Engine ASM
3	322-10	1	Screw-HH
4	3296-29	1	Nut-Lock, NI
5	112-9974	1	Decal-Engine, Honda
6	3256-23	2	Washer-Flat
7	103-2678	3	Screw-Shoulder
8	5-1077	1	Key-Square
9	103-3795	1	Spacer-Retainer, Blade
10	105-8579	1	Bolt-Blade
12	92-1599-03	1	Stiffener-Blade
13	91-2256-03	1	Blade-21 Inch
14	52-2170-03	1	Retainer-Blade ASM
15	32144-70	3	Screw-HWHTF
16	3254-6	3	Washer-Lock, Internal
17	65-5860	1	Protector-Crankshaft
18	46-7910	1	Pulley-Driver

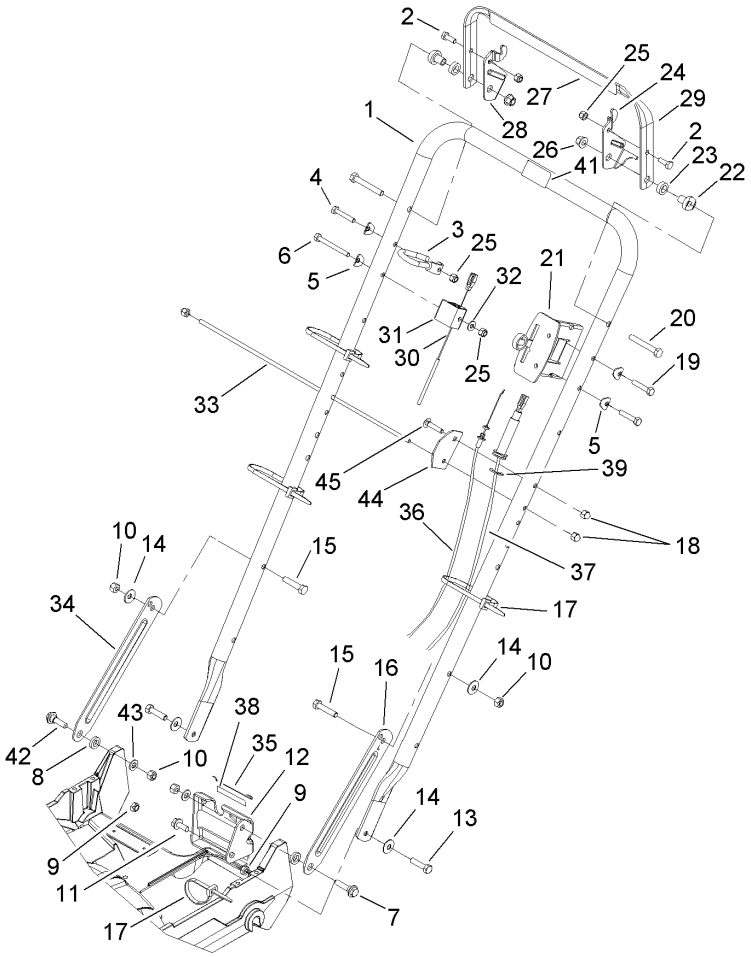

Handle Assembly

Ref	Part No.	Qty.	Description
1	98-2000-03	1	Handle
2	321-4	2	Screw-HH
3	46-8081	1	Guide-Rope
4	321-9	1	Screw-HH
5	3-7501	4	Washer
6	321-15	1	Screw-HH
7	27-7210	1	Screw-Shoulder
8	3-3287	2	Spacer-Latch, Handle
9	3296-47	2	Nut-Lock, NI
10	3296-29	4	Nut-Lock, NI
11	32144-70	1	Screw-HWHTF
12	74-1741	1	Bracket-Adjustment, Traction
13	322-6	2	Screw-HH
14	3290-456	4	Washer-Belleville
15	322-7	2	Screw-HH
16	100-3298-03	1	Latch-Handle, LH
17	3290-378	5	Tie-Cable
18	32111-7	3	Nut-Cap
19	321-13	2	Screw-HH
20	322-11	2	Screw-HH
21	108-2645	1	Control-Head, Throttle
22	49-1630	2	Spacer-Support
23	256-276	2	Spacer-Nylon
24	66-5350	1	Lever-Control

Ref	Part No.	Qty.	Description
25	3296-42	4	Nut-Lock, NI
26	3296-58	2	Nut-Lock, NI
27	106-0690	1	Decal-Traction
28	77-5270	1	Lever-Control
29	61-8270-03	1	Bar-Control
30	114-3439	1	Cable-Brake
31	46-6980	1	Support-Cable
32	3256-22	1	Washer-Flat
33	48-2810	1	Rod-Support, Bag
34	100-3297-03	1	Latch-Handle, RH
35	46-7030	1	Retainer-Cable
36	74-1791	1	Cable-Traction
37	106-0888	1	Throttle Cable ASM
38	74-1970	1	Decal-Position, Gear
39	32151-86	2	E-Ring
41	98-4387	1	Decal-Protection, Ear
42	27-7211	1	Screw-Shoulder
43	3256-23	2	Washer-Flat
44	104-1326	1	Plate-Aligning, Bag
45	3229-3	1	Screw-CARR

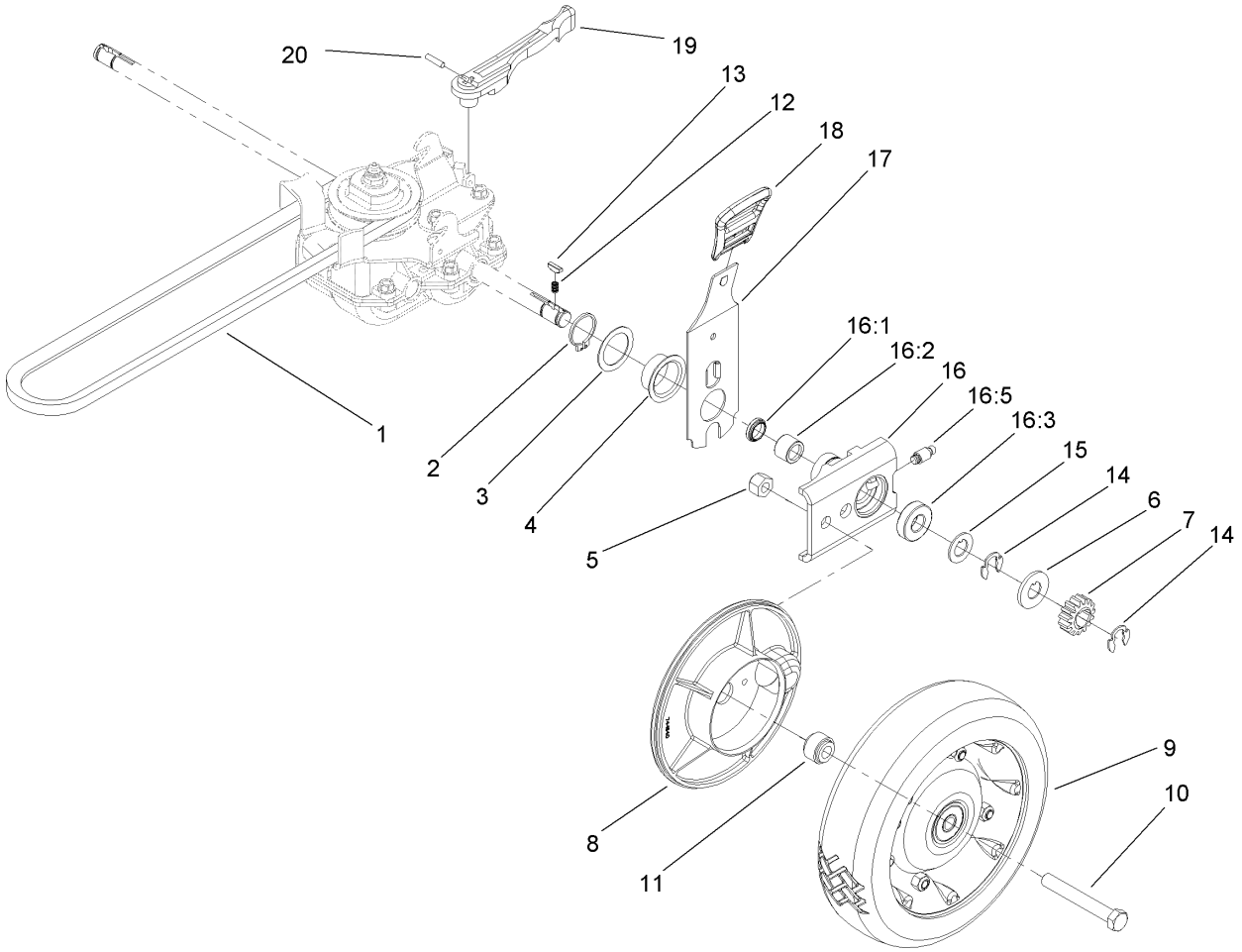

Rear Drive and Wheel Assembly

Ref	Part No.	Qty.	Description
1	36-8070	1	V-Belt
2	32151-36	2	Ring-Retaining
3	74-1810	2	Washer
4	48-2170	2	Cap-End
5	32152-2	2	Nut-Lock, Cone
6	62-3830	2	Washer-Thrust, Outer
7	39-9160	2	Gear-Pinion
8	74-1640	2	Cover-Wheel
9	100-2860	2	Wheel And Tire ASM
10	323-13	2	Screw-HH
11	74-1650	2	Spacer-Cover, Wheel
12	39-9650	2	Spring-Compression
13	612066	2	Key
14	32151-68	4	Ring-Retaining
15	49-7700	2	Washer-Thrust, Outer
16	74-1851	2	Pivot Arm ASM
16:1	47-6730	1	Seal-Oil
16:2	48-2060	1	Bearing-Roller
16:3	52-2450	1	Bearing-Wheel
16:5	92-6316	1	Zerk
17	110-0538	2	Rear Spring Arm ASM
18	110-0549	2	Knob-HOC
19	74-1960	1	Lever-Shift
20	32121-99	1	Pin-Coil

Ref	Part No.	Qty.	Description
❶99	106-0975	1	Grass Bag ASM

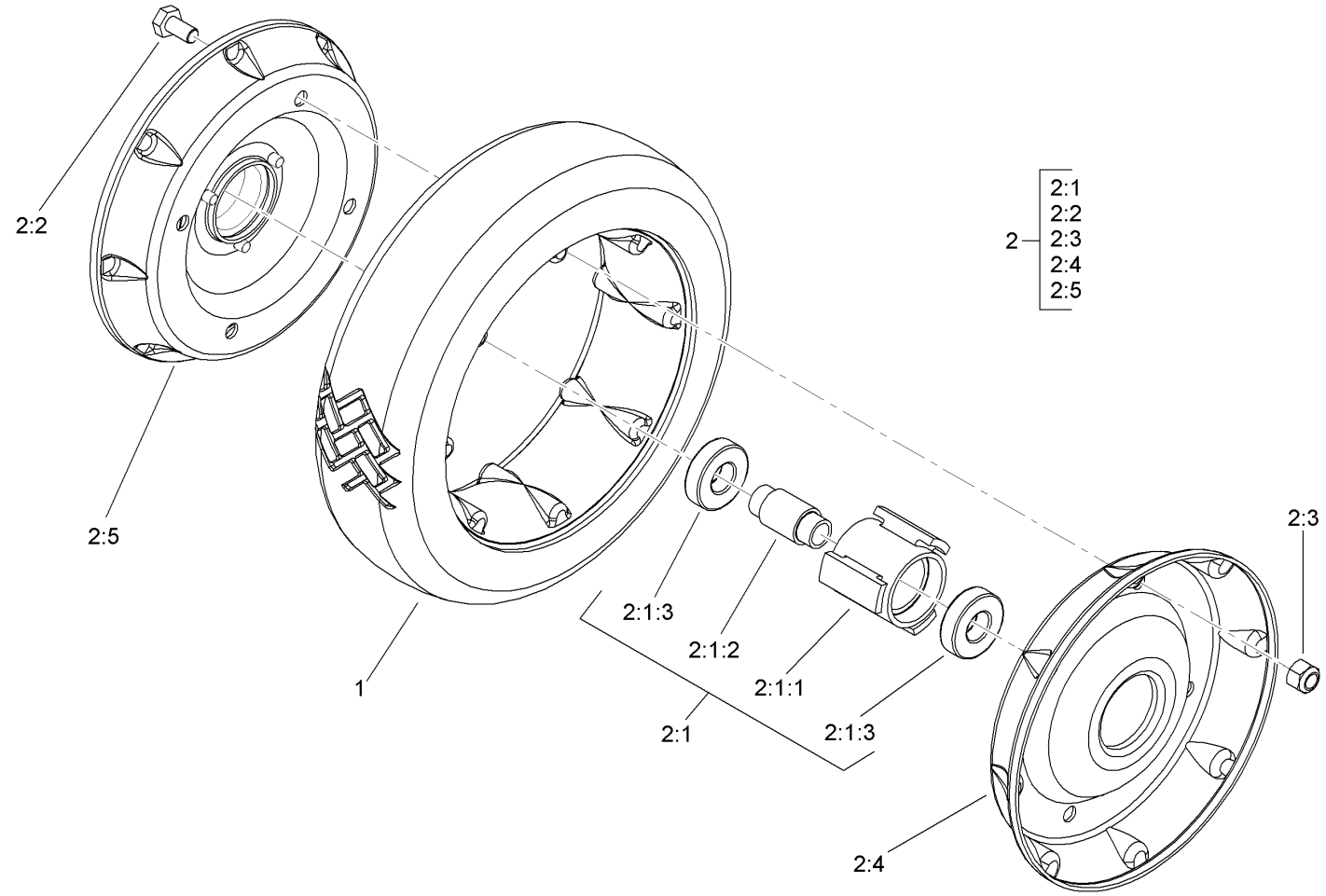

Rear Wheel Assembly No. 100-2860

Ref	Part No.	Qty.	Description
1	53-7740	1	Tire
❷2		1	Wheel ASM
❷2:1		1	Hub And Bearing ASM
2:1:1	52-2410	1	Hub-Bearing
2:1:2	52-2440	1	Spacer-Bearing
2:1:3	52-2450	2	Bearing-Wheel
2:2	321-2	4	Screw-HH
2:3	3296-42	4	Nut-Lock, NI
2:4	53-7780-06	1	Plate-Wheel, Half
2:5	92-4957-06	1	Wheel Half And Gear ASM

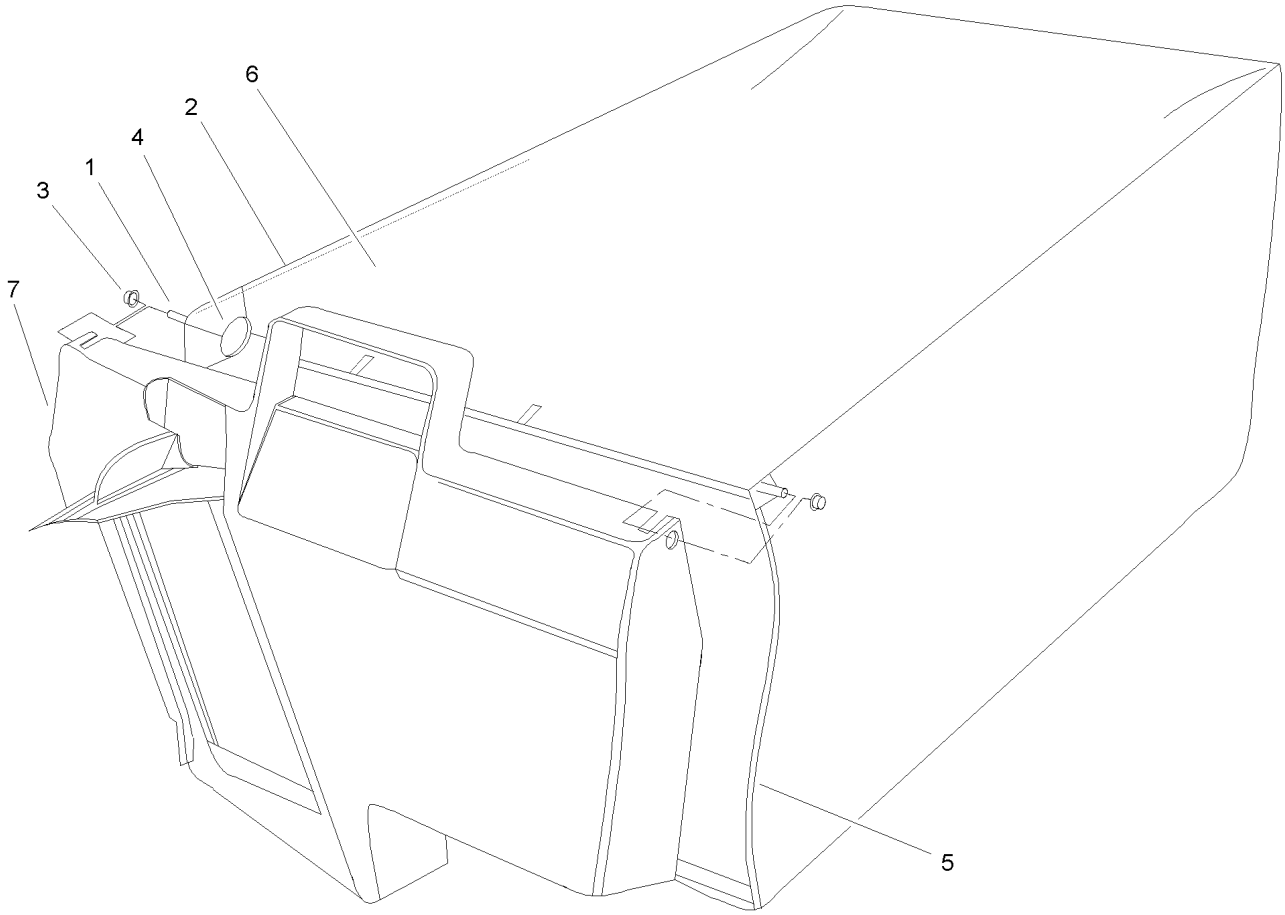

Grass Bag Assembly No. 106-0975

Ref	Part No.	Qty.	Description
1	33-4820	1	Hinge-Door, Bag
2	42-4030	1	Frame-Bag, Upper
3	3290-422	2	Nut-Push
4	36-6910	2	Spring
5	42-4020	1	Frame-Bag
6	106-0926	1	Bag-Grass
7	48-2840	1	Door-Bag, Grass

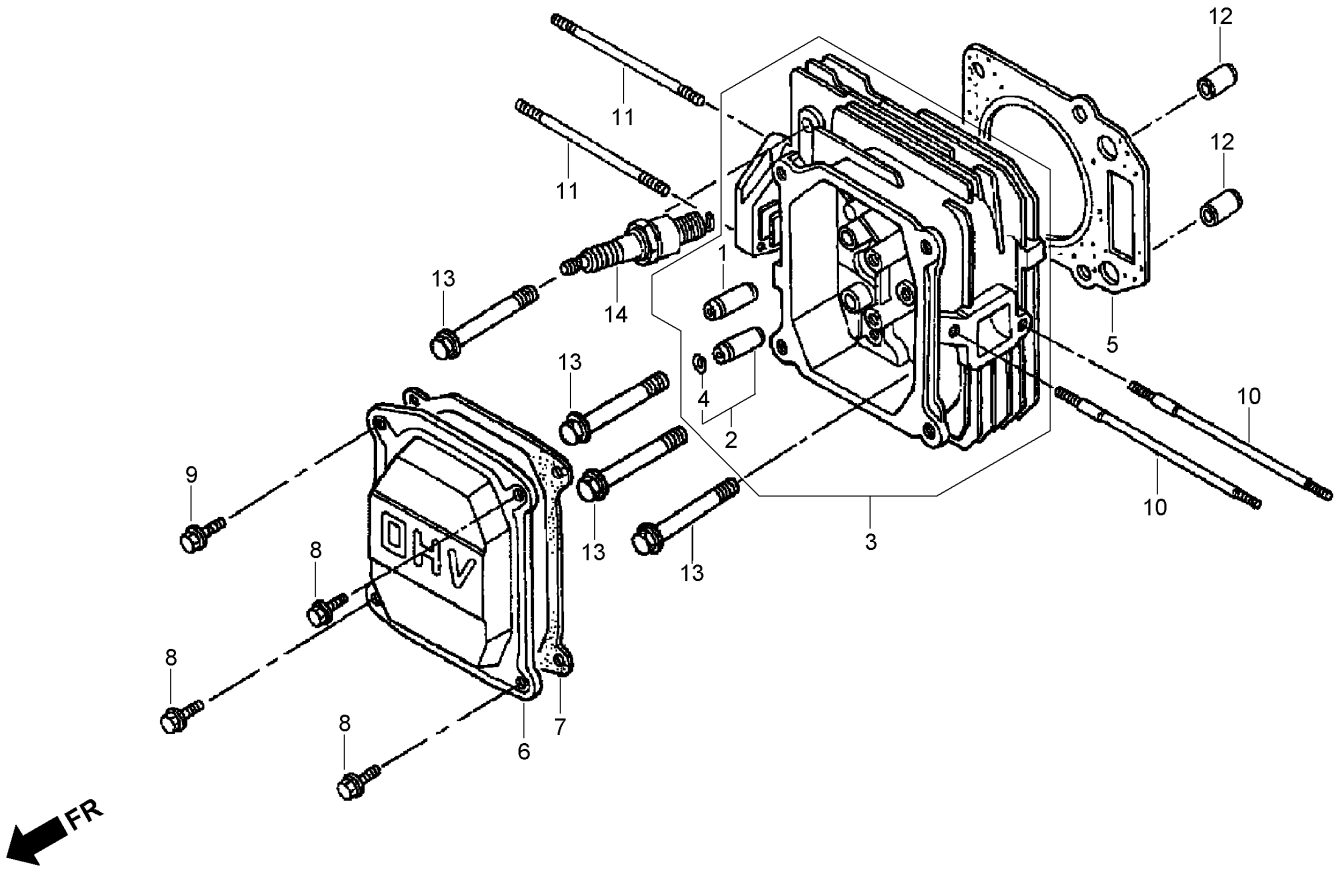

Cylinder Head Assembly
Honda GXV160UH2 A1T

Ref	Part No.	Qty.	Description
❸1	12204-ZE1-306	1	Guide-Valve (O S)
❸2	12205-ZE1-315	1	Guide-Valve, Exhaust (O S)
❸3	12200-ZE7-405	1	Head-Cylinder
❸4	12216-ZE5-300	1	Clip-Guide, Valve
❸5	12251-ZE7-000	1	Gasket-Head, Cylinder
❸6	12311-ZG9-800	1	Cover-Head
❸7	12391-ZE7-M10	1	Gasket-Cover, Cylinder Head
❸8	90014-952-000	3	Bolt-Flange (6X14) (C T200)
❸9	90014-952-000	1	Bolt-Flange (6X14) (C T200)
❸10	90043-ZE6-000	2	Bolt-Stud (6X109)
❸11	90048-ZC3-000	2	Bolt-Stud (6X85)
❸12	94301-10160	2	Pin-Dowel (10X16)
❸13	95701-08050-00	4	Bolt-Flange (8X50)
❸14	98079-54846	1	Spark Plug (B P R4E S) (N G K)

Ref	Part No.	Qty.	Description
❸14	98079-54855	1	Spark Plug (W14E P R-U) (Denso)
❸14	98079-55846	1	Spark Plug (B P R 5E S) (N G K)
❸14	98079-55855	1	Spark Plug (W16E P R-U) (Denso)
❸14	98079-56846	1	Spark Plug (B P R 6E S) (N G K)
❸14	98079-56855	1	Spark Plug (W20E P R-U) (Denso)

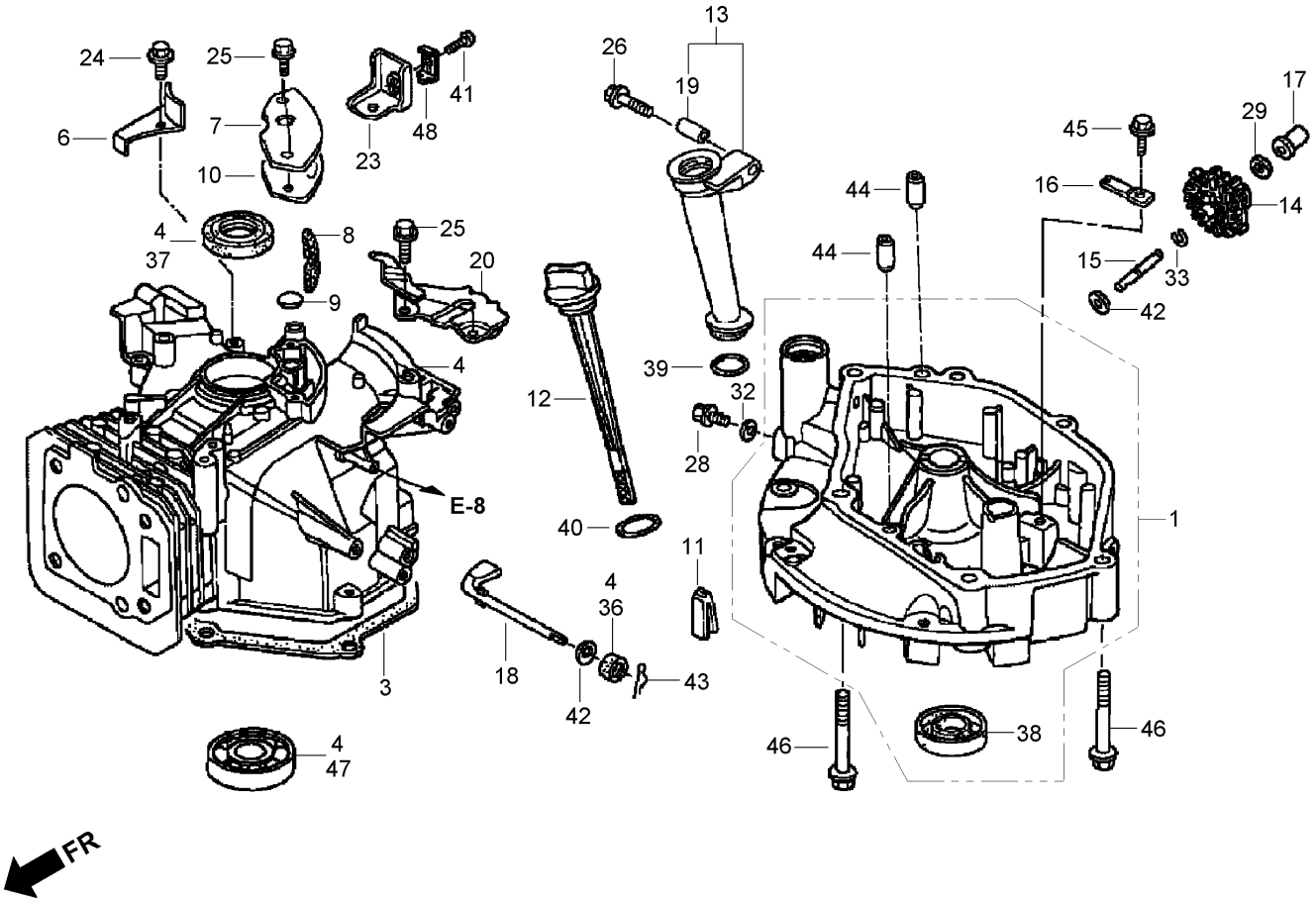

Cylinder Barrel Assembly
Honda GXV160UH2 A1T

Ref	Part No.	Qty.	Description
❸1	11300-Z1V-406	1	Oil Pan ASM
❸3	11381-ZE7-M10	1	Gasket-Pan, Oil
❸4	12000-Z1V-405	1	Cylinder ASM
❸6	12126-Z1V-800	1	Guide-Plate, A
❸7	12355-Z1V-000	1	Cover-Breather
❸8	12367-883-003	1	Filter-Breather
❸9	12372-ZE7-000	1	Valve-Breather
❸10	12373-ZE7-000	1	Gasket-Cover, Breather
❸11	15335-ZE7-000	1	Rubber-Return, Oil
❸12	15620-ZE6-810	1	Dipstick-Oil
❸13	15630-ZE6-810	1	Extension-Filler, Oil (106 Mm)
❸14	16510-ZE6-000	1	Governor ASM
❸15	16515-ZE6-010	1	Shaft-Holder, Governor

Ref	Part No.	Qty.	Description
❸16	16525-ZE6-010	1	Plate-Holder, Governor Shaft
❸17	16531-Z1T-000	1	Slider-Governor
❸18	16541-ZE7-000	1	Shaft-Arm, Governor
❸19	17240-ZE6-000	1	Collar-Extension
❸20	17560-Z1V-000	1	Stay-Tank
❸23	43143-Z1V-000	1	Base-Holder
❸24	90013-883-000	1	Bolt-Flange (6X12) (C T200)
❸25	90014-952-000	4	Bolt-Flange (6X14) (C T200)
❸26	90017-883-000	1	Bolt-Flange (6X32)
❸28	90131-ZE1-000	1	Bolt-Plug, Drain
❸29	90451-ZE1-000	1	Washer-Thrust (6Mm)
❸32	90601-ZE1-000	1	Washer-Plug, Drain (102Mm)
❸33	90602-ZE1-000	1	Clip-Holder, Governor

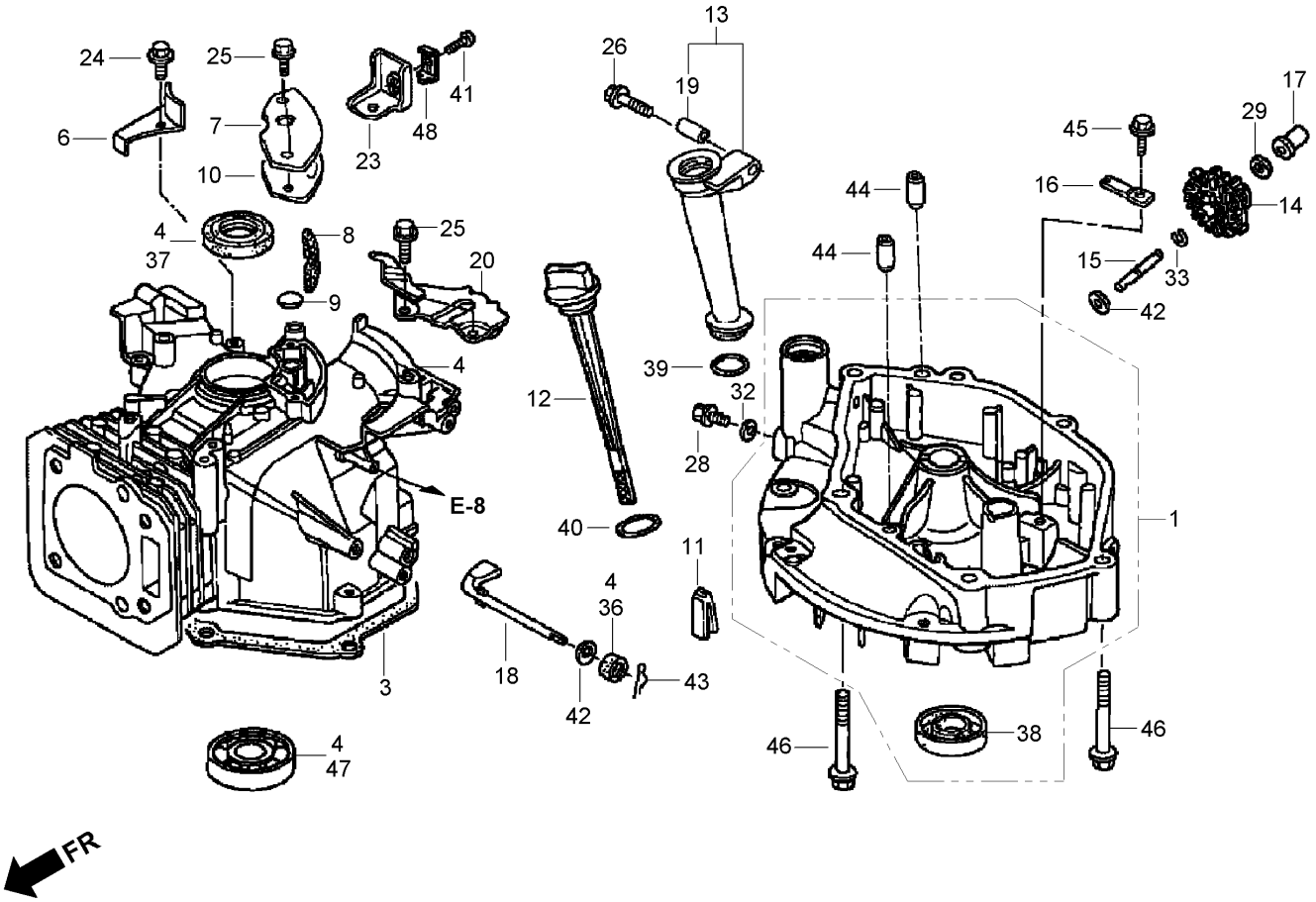

Cylinder Barrel Assembly
Honda GXV160UH2 A1T (continued)

Ref	Part No.	Qty.	Description
❸36	91231-Z1V-003	1	Seal-Oil (6X11X4)
❸37	91251-Z1V-003	1	Seal-Oil (25X38X7)
❸38	91252-Z1V-003	1	Seal-Oil (25.4X40X7)
❸39	91301-Z1V-003	1	O-Ring (22.1X2.2)
❸40	91302-Z1V-003	1	O-Ring (25.5X3)
❸41	93500-05016-0A	1	Screw-Pan (5X16)
❸42	94101-06800	2	Washer-Plain (6Mm)
❸43	94251-08000	1	Pin-Lock (8Mm)
❸44	94301-08140	2	Pin-Dowel (8X14)
❸45	95701-06012-08	1	Bolt-Flange (6X12)
❸46	95701-08050-00	6	Bolt-Flange (8X50)
❸47	96100-62050-00	1	Bearing-Ball, Radial (6205)
❸48	16576-891-000	1	Holder-Cable

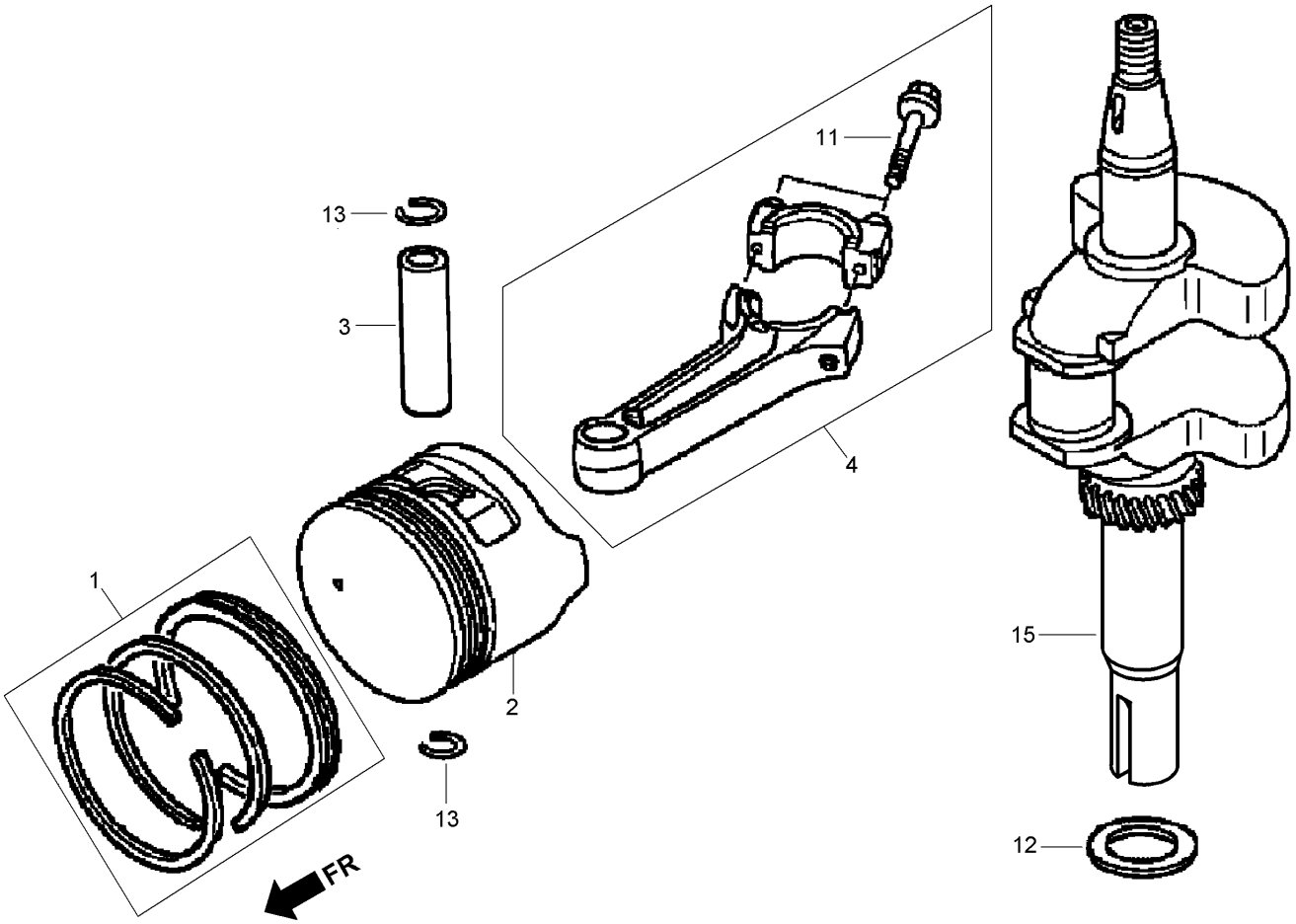

Crankshaft and Piston Assembly
Honda GXV160UH2 A1T

Ref	Part No.	Qty.	Description
❸1	13010-Z4K-004	1	Piston Ring Set (STD) (Teikoku)
❸1	13010-Z4P-003	1	Piston Ring Set (STD) (Riken)
❸1	13011-Z4K-004	1	Piston Ring Set (O S 0.25) (Teikoku)
❸1	13011-Z4P-003	1	Piston Ring Set (O S 0.25) (Riken)
❸1	13012-Z4K-004	1	Piston Ring Set (O S 0.50) (Teikoku)
❸1	13012-Z4P-003	1	Piston Ring Set (O S 0.50) (Riken)
❸1	13013-Z4K-004	1	Piston Ring Set (0.75) (Teikoku)
❸1	13013-Z4P-003	1	Piston Ring Set (0.75) (Riken)
❸2	13101-Z1T-010	1	Piston (STD) (Jialing-Honda)
❸2	13102-ZH8-020	1	Piston (O S 0.25)
❸2	13103-ZH8-020	1	Piston (O S 0.50)
❸2	13104-ZH8-020	1	Piston (0.75)
❸3	13111-Z1T-000	1	Pin-Piston

Ref	Part No.	Qty.	Description
❸4	13200-Z1V-000	1	Connecting Rod ASM
❸11	90001-ZE1-000	2	Bolt-Rod, Connecting
❸12	90401-ZE7-W00	1	Washer-Thrust (25.6 Mm)
❸13	90551-ZE1-000	2	Clip-Pin, Piston (18 Mm)
❸15	13310-ZE7-V10	1	Crankshaft

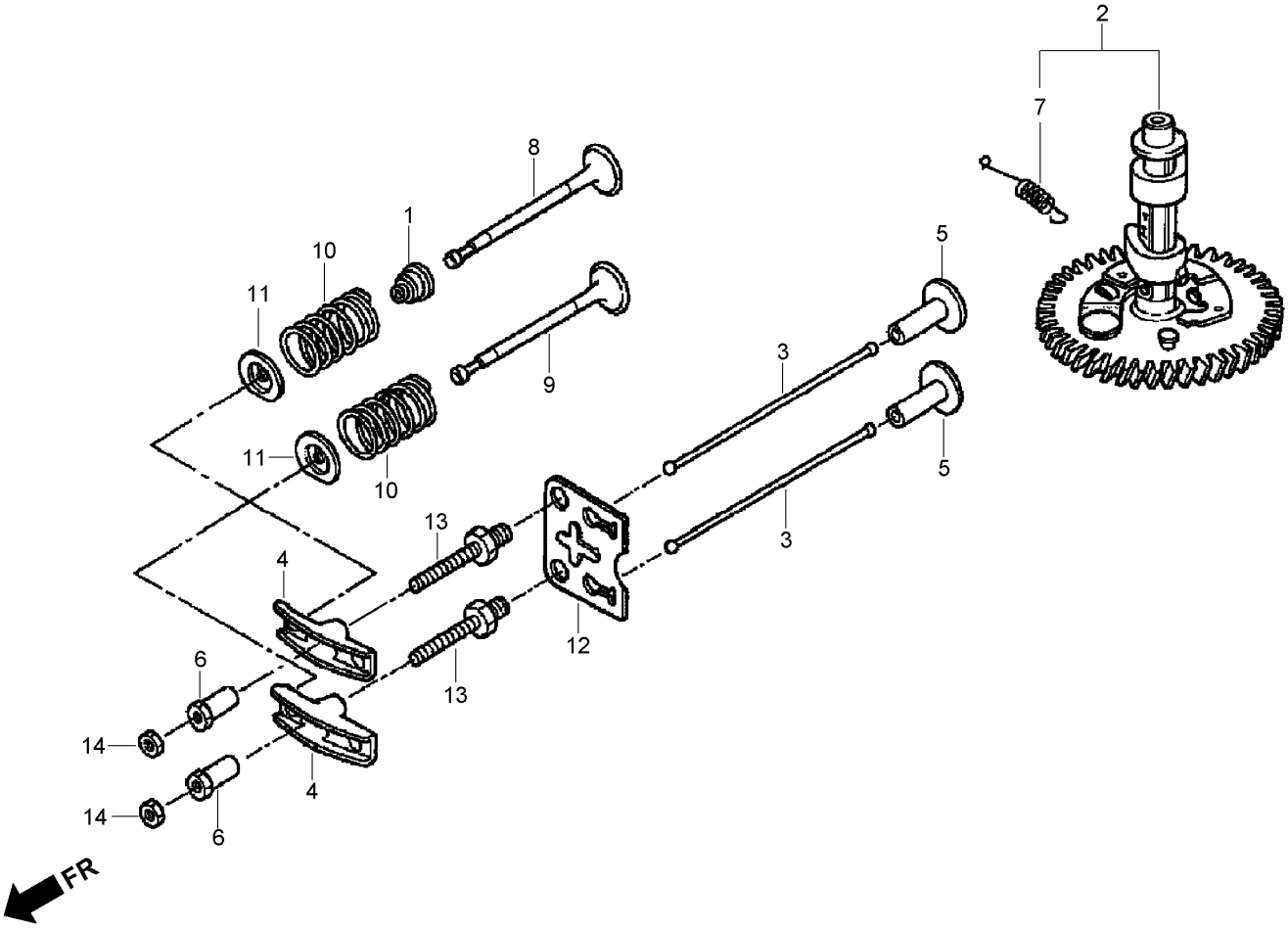

Camshaft Assembly
Honda GXV160UH2 A1T

Ref	Part No.	Qty.	Description
❸1	12209-ZE6-003	1	Seal-Stem, Valve
❸2	14100-ZE7-000	1	Camshaft ASM
❸3	14410-ZE1-010	2	Rod-Push
❸4	14431-ZE1-000	2	Arm-Rocker, Valve
❸5	14441-ZE1-010	2	Lifter-Valve
❸6	14451-ZE1-013	2	Pivot-Arm, Rocker
❸7	14568-ZE1-000	1	Spring-Return, Weight
❸8	14711-ZF1-000	1	Valve-Intake
❸9	14721-ZE7-000	1	Valve-Exhaust
❸10	14751-ZE1-000	2	Spring-Valve
❸11	14771-ZE1-000	2	Retainer-Spring, Valve (Intake)
❸12	14791-ZE1-010	1	Plate-Guide, Push Rod
❸13	90012-ZE0-010	2	Bolt-Pivot (8 Mm)

Ref	Part No.	Qty.	Description
❸14	90206-ZE1-000	2	Nut-Adjusting, Pivot

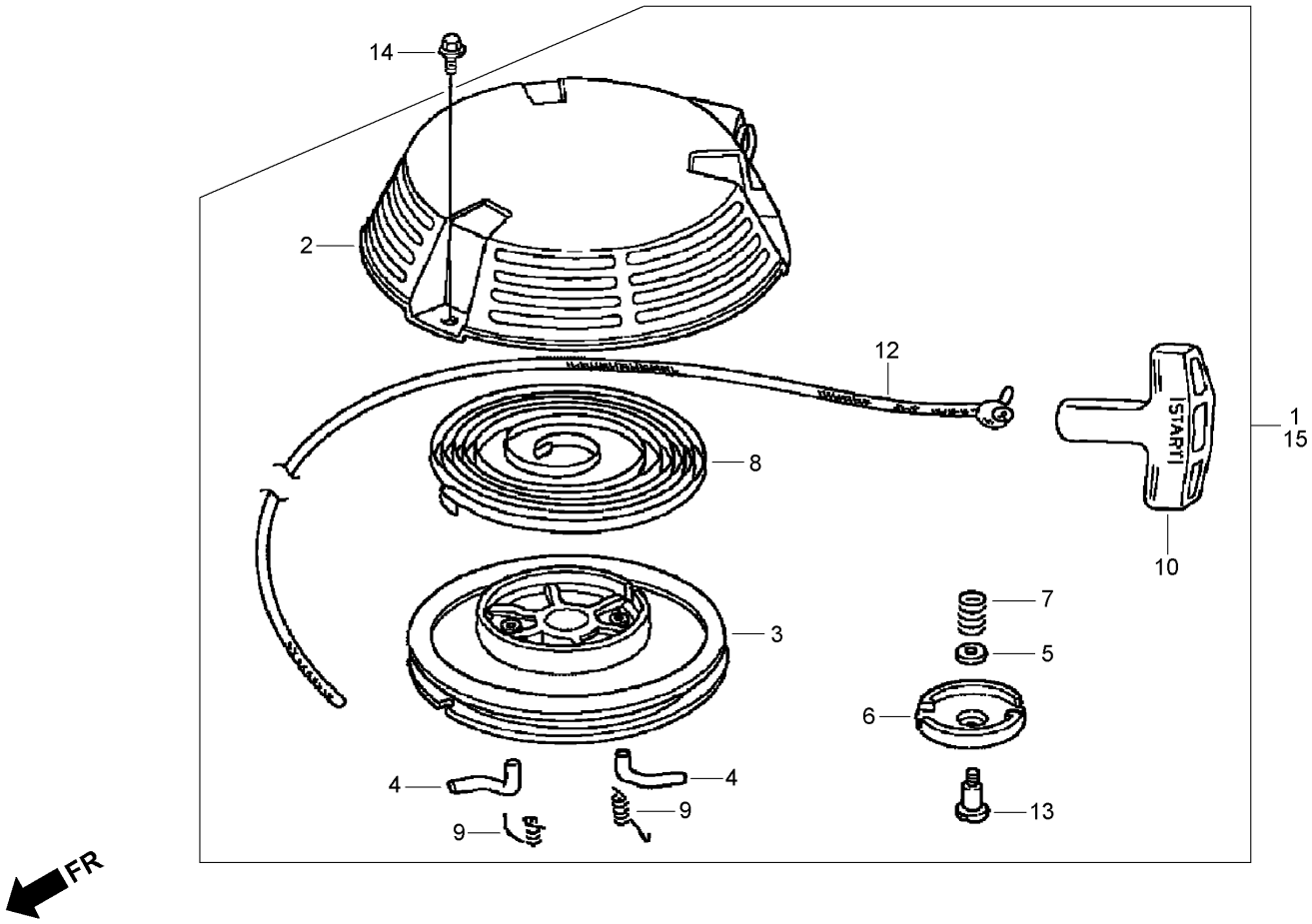

Recoil Starter Assembly
Honda GXV160UH2 A1T

Ref	Part No.	Qty.	Description
❸1	28400-Z4P-801ZA	1	Recoil Starter ASM-N H1 (Long Rope) (Black)
❸1	28400-Z4P-801ZB	1	Recoil Starter ASM-R280 (Long Rope) (Power Red)
❸2	28410-Z1V-003ZA	1	Case-Starter, Recoil R280 (Power Red)
❸2	28410-Z1V-003ZB	1	Case-Starter, Recoil (N H1) (Black)
❸3	28420-Z1V-003	1	Reel-Starter, Recoil (Black)
❸4	28422-ZH8-801	2	Ratchet-Starter
❸5	28431-ZH8-801	1	Plate-Friction
❸6	28433-ZH8-801	1	Guide-Ratchet
❸7	28441-ZH8-801	1	Spring-Friction
❸8	28442-ZH8-003	1	Spring-Starter, Recoil
❸9	28443-ZH8-801	2	Spring-Return
❸10	28461-ZE1-003	1	Knob-Starter, Recoil
❸12	28462-Z4P-801	1	Rope-Starter, Recoil

Ref	Part No.	Qty.	Description
❸13	90003-ZH8-801	1	Screw-Setting
❸14	95701-06008-00	3	Bolt-Flange (6X8)
❸15	28400-Z1V-J52ZA	1	Recoil Starter ASM-R280 (Long Rope) (Power Red)
❸15	28400-Z1V-J52ZB	1	Recoil Starter ASM-N H1 (Long Rope) (Black)

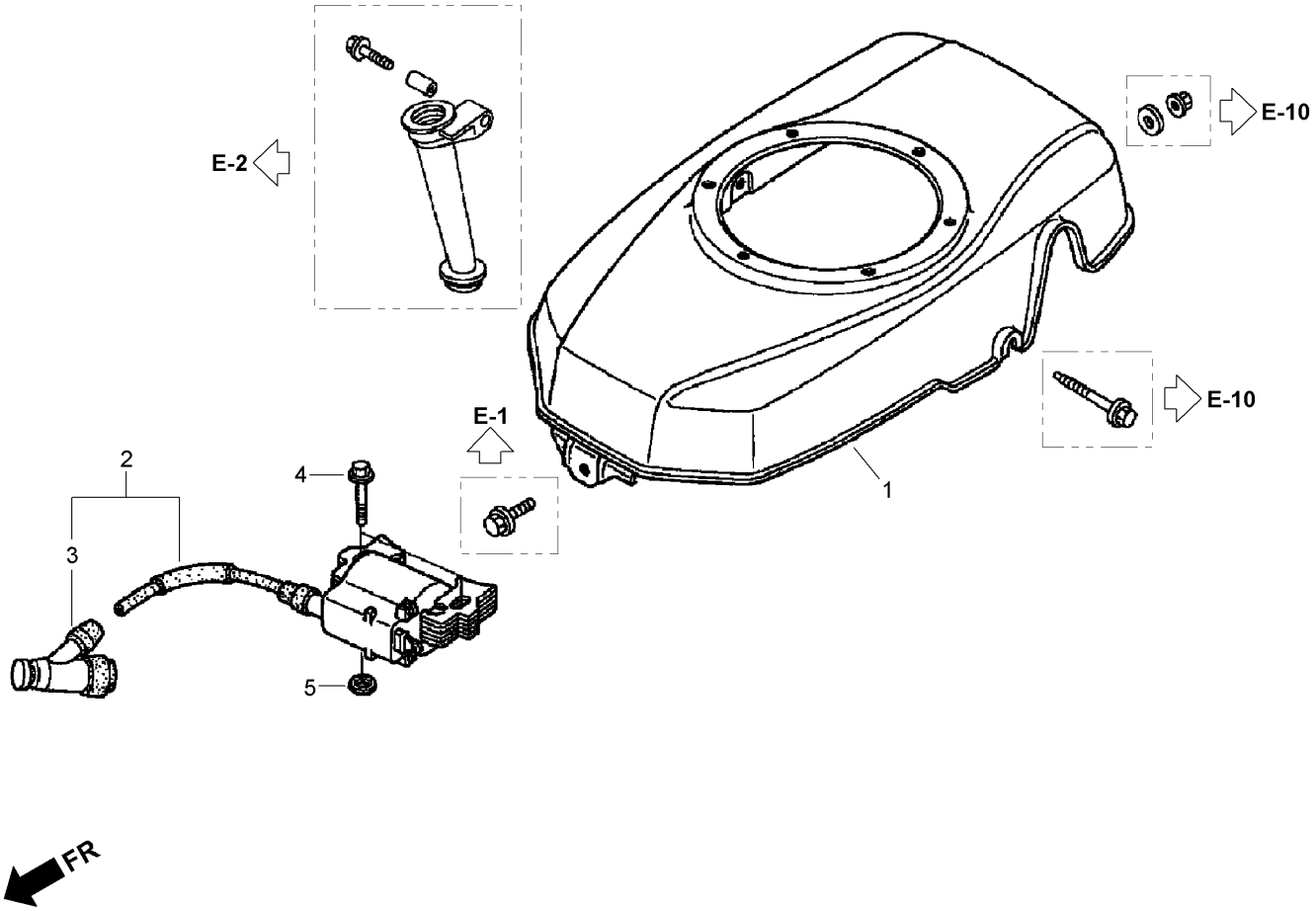

Fan Cover Assembly
Honda GXV160UH2 A1T

Ref	Part No.	Qty.	Description
❸1	19610-Z1V-000ZA	1	Cover-Fan, R280 (Power Red)
❸2	19610-Z1V-000ZB	1	Cover-Fan (N H1) (Black)
❸3	30500-Z1V-013	1	Ignition Coil ASM
❸3	30700-Z1V-003	1	Noise Suppressor Cap ASM
❸4	90015-883-000	2	Bolt-Flange (6X28)
❸5	90581-Z1V-000	2	Washer-Plain (6 Mm)

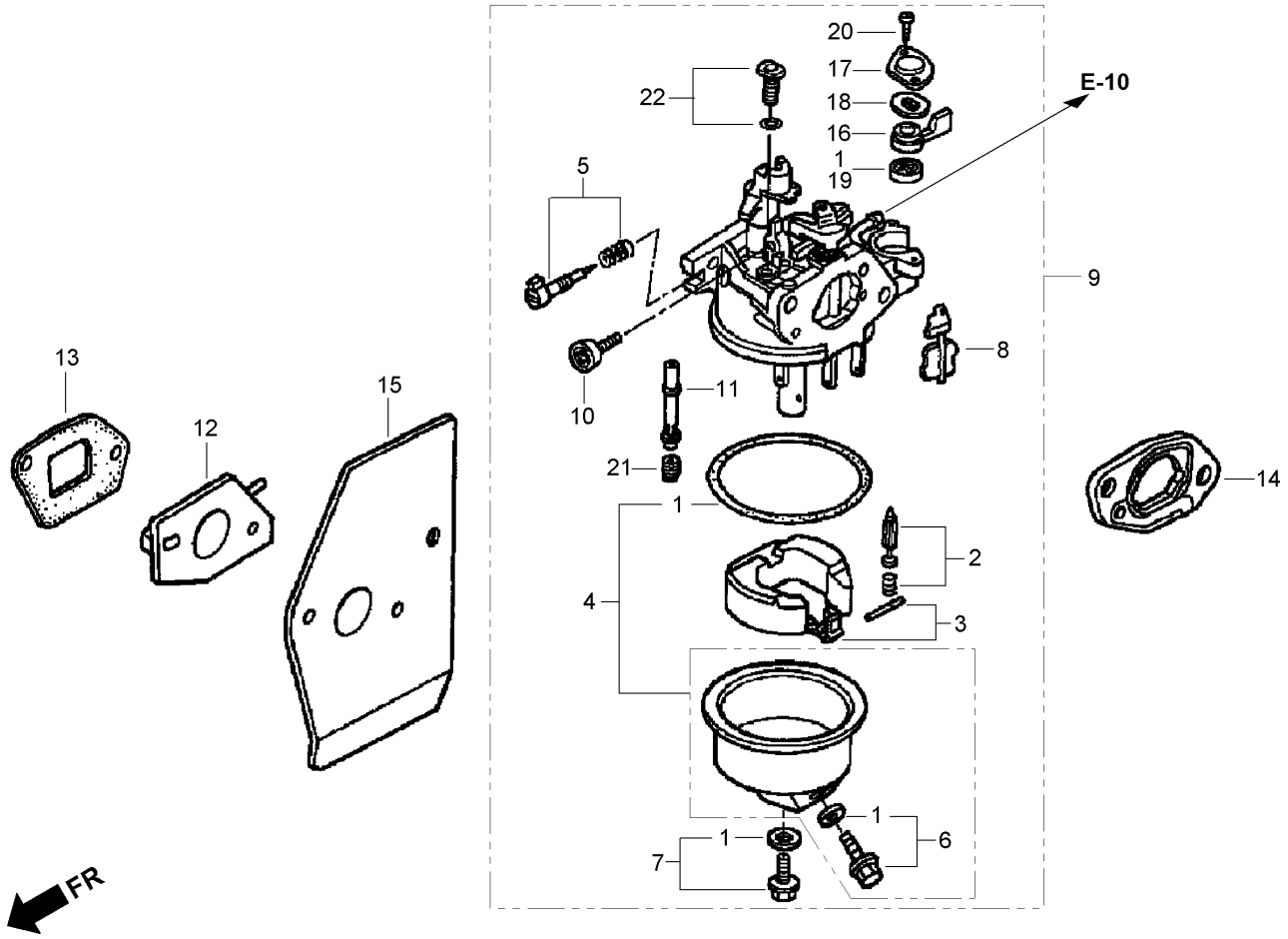

Carburetor Assembly
Honda GXV160UH2 A1T

Ref	Part No.	Qty.	Description
❸1	16010-ZE0-025	1	Gasket Set
❸2	16011-ZE0-005	1	Float Valve Set
❸3	16013-Z0S-B01	1	Float Set
❸4	16015-ZE0-831	1	Float Chamber Set
❸5	16016-ZH7-W01	1	Pilot Screw Set
❸6	16024-ZE1-811	1	Drain Screw Set
❸7	16028-ZE0-005	1	Screw Set
❸8	16045-Z1V-G01	1	Choke Set
❸9	16100-Z1V-801	1	Carburetor ASM (B E66 N A)
❸10	16124-ZE0-005	1	Screw- Stop, Throttle
❸11	16166-Z1V-801	1	Nozzle-Main
❸12	16211-ZE7-000	1	Insulator-Carburetor
❸13	16212-ZE7-M10	1	Gasket-Insulator

Ref	Part No.	Qty.	Description
❸14	16220-ZE6-010	1	Spacer-Carburetor
❸15	16221-ZE7-M11	1	Gasket-Carburetor
❸16	16953-ZE1-812	1	Lever-Petcock
❸17	16954-ZE1-812	1	Plate-Setting, Lever
❸18	16956-ZE1-811	1	Spring-Lever, Petcock
❸19	16957-ZE1-812	1	Gasket-Petcock
❸20	93500-03006-0H	2	Screw-Pan (3X6)
❸21	99101-ZH8-0620	1	Jet-Main (No. 62)
❸21	99101-ZH8-0650	1	Jet-Main (No. 65)
❸21	99101-ZH8-0680	1	Jet-Main (No. 68)
❸22	99204-ZE0-0350	1	Pilot Jet Set (No. 35)

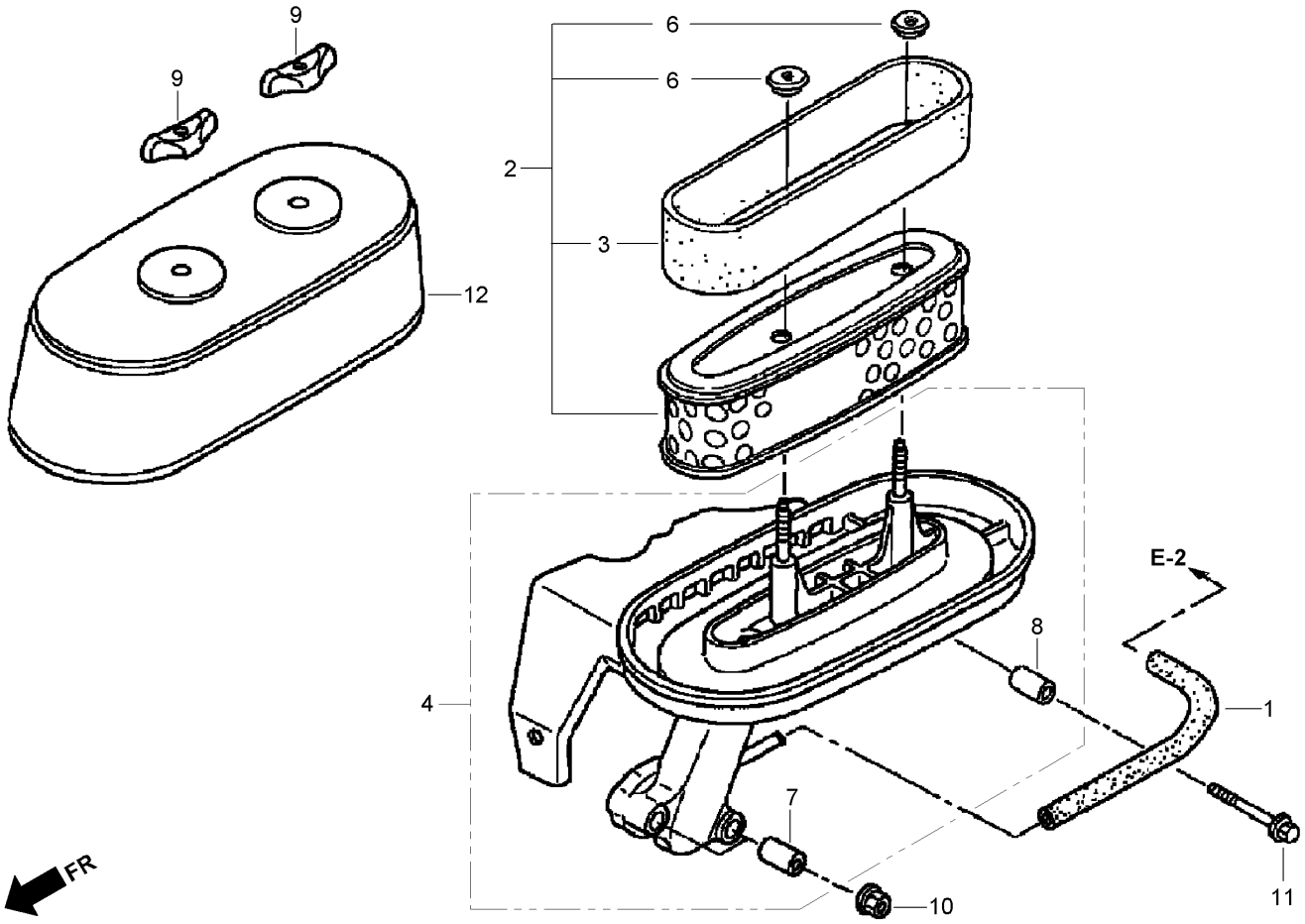

Air Cleaner Assembly
Honda GXV160UH2 A1T

Ref	Part No.	Qty.	Description
❸1	15721-ZE7-000	1	Tube-Breather
❸2	17210-Z1V-003	1	Element-Cleaner, Air
❸3	17218-ZE6-505	1	Filter (Outer)
❸3	17218-888-003	1	Filter (Outer)
❸4	17220-Z1V-000	1	Housing-Cleaner, Air
❸6	17232-891-000	2	Grommet-Cleaner, Air
❸7	17238-ZE7-710	2	Collar-Cleaner, Air
❸8	17239-ZE6-300	1	Collar B-Cleaner, Air
❸9	90300-Z1V-000	2	Nut-Cleaner, Air
❸10	94050-06000	2	Nut-Flange (6 Mm)
❸11	95701-06035-00	1	Bolt-Flange (6X35)
❸12	17231-Z1V-G00	1	Cover-Cleaner, Air (Serial Numbers Up To 1036455)
❸12	17231-Z1V-G01	1	Cover-Cleaner, Air (Serial Numbers From 1036456)

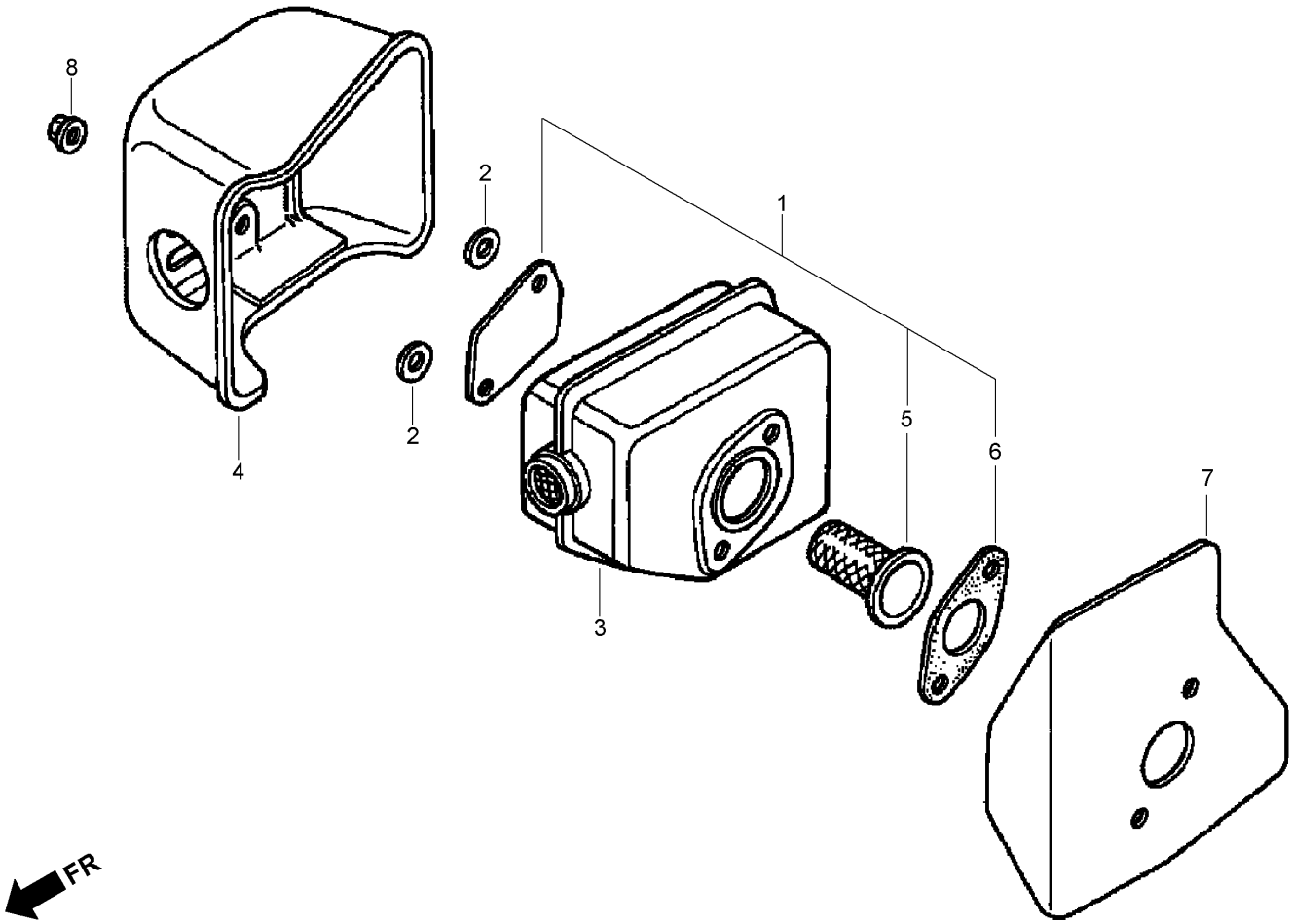

Muffler Assembly
Honda GXV160UH2 A1T

Ref	Part No.	Qty.	Description
❸1	06180-ZE6-820	1	Spark Arrester Kit
❸2	18292-ZE7-M10	2	Gasket-Protector
❸3	18310-ZE7-W40	1	Muffler
❸3	18310-ZE7-013	1	Muffler
❸4	18320-Z1V-000	1	Protector-Muffler
❸5	06180-888-505	1	Spark Arrester Kit
❸6	18381-ZE6-820	1	Gasket-Muffler
❸7	18381-Z1V-000	1	Gasket-Muffler
❸8	90343-ZE6-000	2	Nut-Lock, Self (6 Mm)

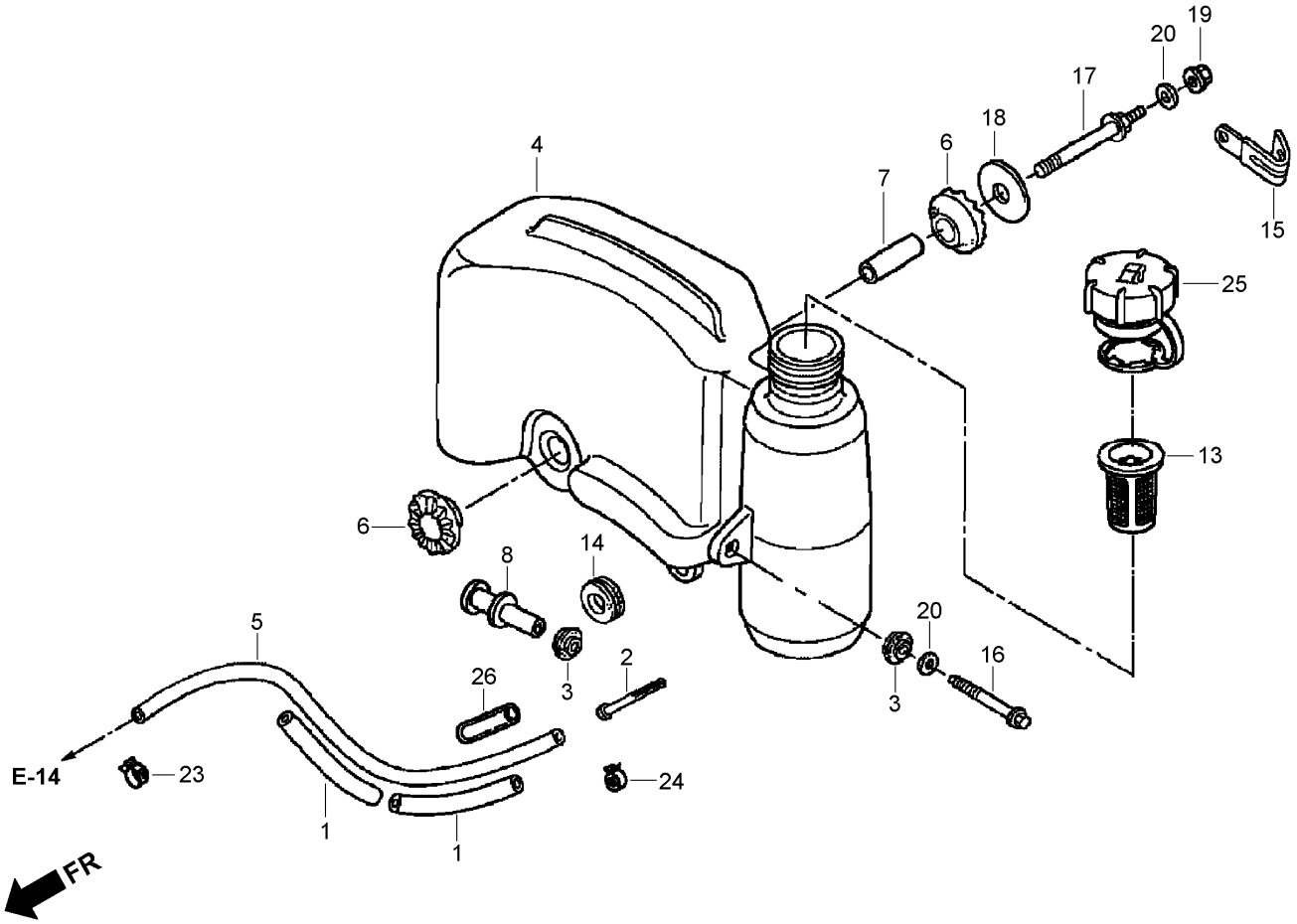

Fuel Tank Assembly
Honda GXV160UH2 A1T

Ref	Part No.	Qty.	Description
❸1	16854-ZH8-000	1	Supporter-Rubber (107 Mm)
❸2	16952-Z1V-000	1	Filter-Fuel
❸3	17506-ZE7-000	2	Rubber-Setting, Tank
❸4	17510-Z4P-000	1	Tank-Fuel
❸5	17512-Z4P-013	1	Tube-Fuel (F K M)
❸6	17516-896-700	2	Rubber B-Mounting, Tank
❸7	17518-Z1V-000	1	Collar-Set, Tank
❸8	17519-Z1V-000	1	Collar-Tank
❸13	17636-Z1V-010	1	Gauge-Level, Fuel
❸14	80103-MG2-000	1	Cushion-Fender, R R
❸15	90010-GE0-710	1	Clip-Tube
❸16	90014-Z1V-000	1	Bolt-Flange (6X47) (C T200)
❸17	90016-Z1V-000	1	Bolt-Stay, Tank

Ref	Part No.	Qty.	Description
❸18	90455-896-700	1	Washer-Mounting, Tank
❸19	94050-06000	1	Nut-Flange (6 Mm)
❸20	94103-06000	2	Washer-Plain (6 Mm)
❸23	95002-40800-08	1	Clamp-Tube (D8)
❸24	95002-41050-08	1	Clamp-Tube (D10.5)
❸25	17620-Z0J-800	1	Fuel Tank Cap ASM
❸26	95003-25003-10M	1	Hose-Bulk, Vinyl (9X11X3000) (9X11X30)

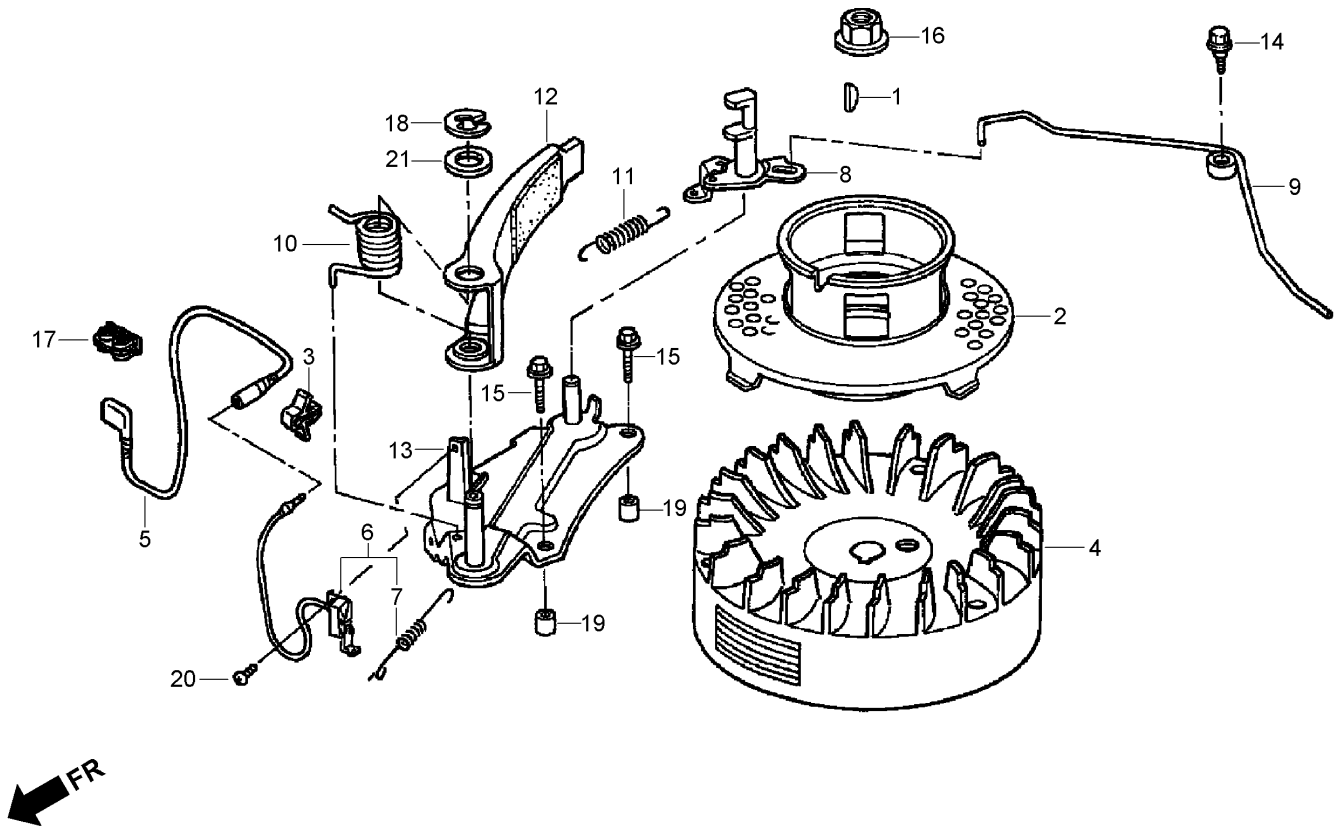

Flywheel Assembly
Honda GXV160UH2 A1T

Ref	Part No.	Qty.	Description
❸1	13331-357-000	1	Key-Woodruff, Special (25X18)
❸2	28450-Z1V-000	1	Pulley-Starter
❸3	30701-883-000	1	Clip-Wire, Ignition (8 Mm)
❸4	31110-Z1V-810	1	Flywheel (Brake)
❸5	32195-Z1V-810	1	Wire-Switch, Stop (Brake)
❸6	35120-Z1V-811	1	Engine Stop Switch ASM (Brake)
❸7	35129-Z1V-811	1	Spring-Control, Switch
❸8	43140-Z1V-000	1	Cam-Brake
❸9	43145-ZE7-003	1	Rod-Return, Throttle
❸10	75112-ZE6-000	1	Spring-Brake
❸11	75113-ZE6-000	1	Spring-Return, Brake
❸12	75120-ZE6-013	1	Brake
❸13	75130-ZE7-000	1	Base-Brake

Ref	Part No.	Qty.	Description
❸14	90015-ZE6-000	1	Bolt-Flange (6 Mm)
❸15	90018-ZE1-000	2	Bolt-Flange (6X23) (C T200)
❸16	90201-878-003	1	Nut-Special (14 Mm)
❸17	90505-MCT-000	1	Clamp-Pipe
❸18	90653-723-000	1	E-Ring (10 Mm)
❸19	90702-ZE6-000	2	Pin-Dowel (8X9)
❸20	93500-04008-0A	1	Screw-Pan (4X8)
❸21	94102-12800	1	Washer-Flat (12 Mm)

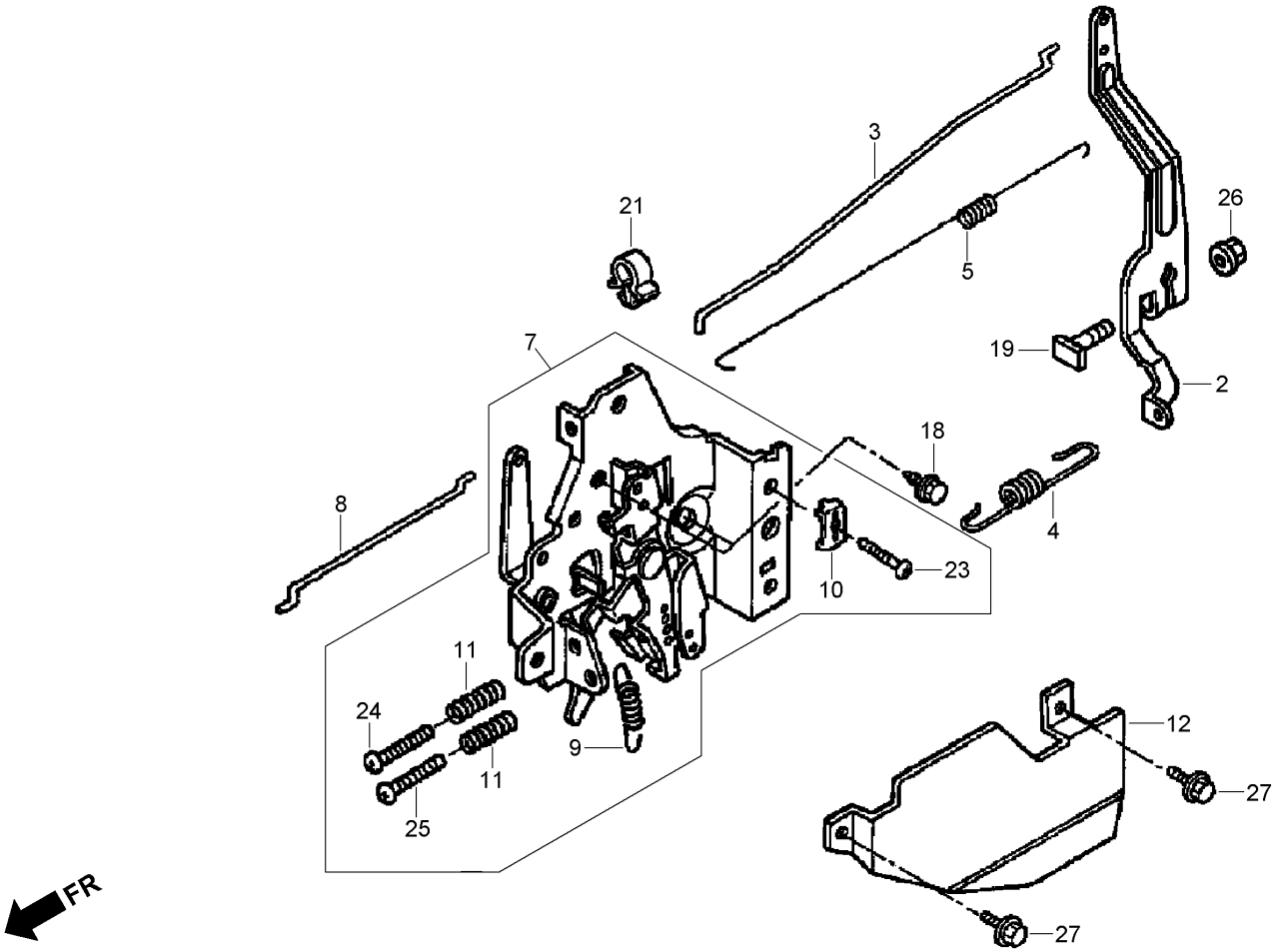

Control Assembly
Honda GXV160UH2 A1T

Ref	Part No.	Qty.	Description
❸2	16551-ZE7-000	1	Arm-Governor
❸3	16555-ZE7-000	1	Rod-Governor
❸4	16561-ZE7-020	1	Spring-Governor (STD)
❸5	16562-ZE6-000	1	Spring-Return, Throttle
❸7	16570-ZE7-020	1	Control ASM
❸8	16573-ZE7-000	1	Rod-Choke
❸9	16576-ZE7-300	1	Spring-Lever
❸10	16576-891-000	1	Holder-Cable
❸11	16584-883-300	2	Spring-Adjusting, Control
❸12	16585-ZE7-000	1	Protector-Control
❸18	90013-883-000	2	Bolt-Flange (6X12) (C T200)
❸19	90015-ZE5-010	1	Bolt-Arm, Governor
❸21	90659-680-013	1	Clip-Harness, Wire

Ref	Part No.	Qty.	Description
❸23	93500-05016-0A	1	Screw-Pan (5X16)
❸24	93500-05020-0A	1	Screw-Pan (5X20)
❸25	93500-05028-0A	1	Screw-Pan (5X28)
❸26	94050-06000	1	Nut-Flange (6 Mm)
❸27	95701-06010-00	2	Bolt-Flange (6X10)

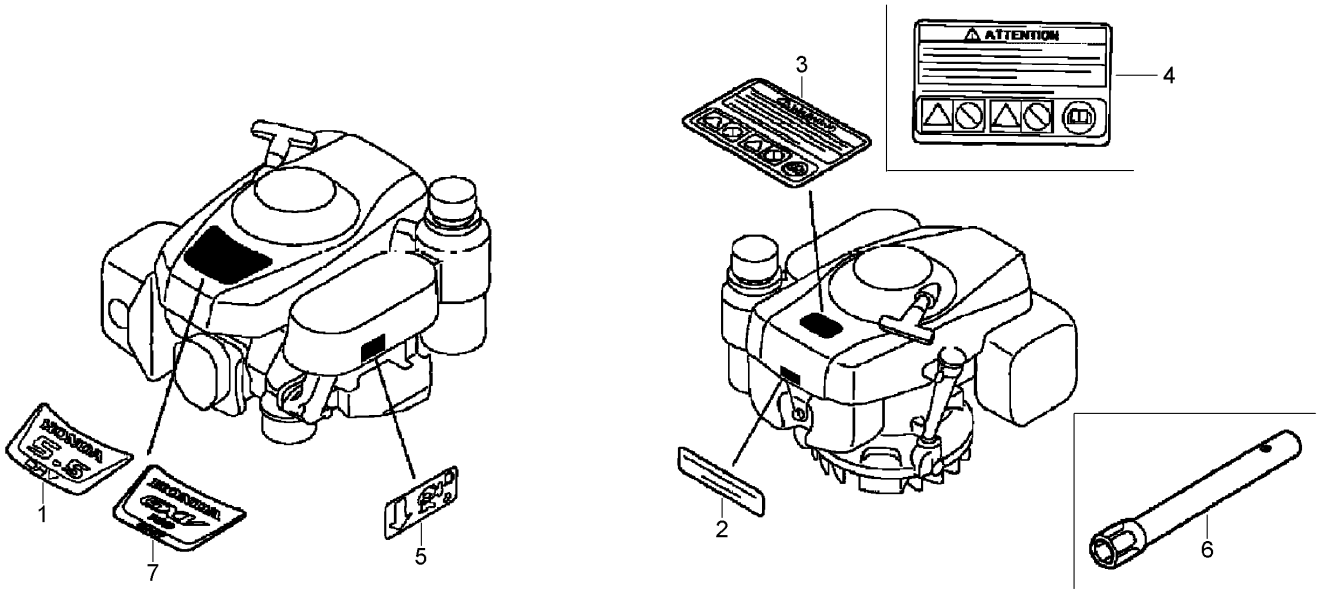

Label and Tool Assemblies
Honda GXV160UH2 A1T

Ref	Part No.	Qty.	Description
❸1	87101-Z1V-000	1	Mark, Emblem (Serial Numbers Up To 1036455)
❸2	87504-Z1V-000	1	Mark-Manufacturer
❸3	87516-Z4N-000	1	Mark-Caution, Operator (English)
❸3	87516-Z4N-810	1	Mark-Caution, Operator (French)
❸4	87516-Z4N-800	1	Mark-Caution, Operator (Pictograph)
❸5	87524-Z1V-000	1	Mark-Caution, Fuel Petcock
❸6	99004-21003	1	Wrench-Box (P21)
❸7	87101-Z1V-010	1	Mark, Emblem (Gxv160) (Serial Numbers From 1036456)

NOTES

NOTES

TORO®