Form Number 3358-953 Rev A

TimeCutter™ Z5000
Riding Mower

Model No. 74391 - 280000001 and up.

Parts Catalog

Ordering Replacement Parts
To order replacement parts, please supply the part number, the quantity, and the description of each part desired.

Understanding Reference Numbers
Each Identified part in an illustration has a reference number. The reference number for a part also appears in the parts list, along with other information about the part.

This catalog uses two special reference number formats, one to indicate parts in a service assembly and another to indicate the quantity of a given part in an illustration.

Service Assembly Reference Numbers
Parts in service assemblies have reference numbers in the form a:b. The a represents the reference number of the entire service assembly and the b represents a sequential number unique to each part within the service assembly.

For example, a wheel assembly might be identified by reference number 6, the tire by 6:1, the valve by 6:2, and the wheel by 6:3. When you order the assembly identified by reference number 6, you receive all parts identified by reference numbers 6:1, 6:2, and 6:3. However, you may also order any part individually. Reference numbers of this type appear in illustrations and in part lists.

Reference Numbers Indicating Quantity
In an illustration, if a reference number indicates more than one part, the reference number has the form nX y. The n represents the quantity of the part, the X is the multiplication symbol, and the y represents the reference number.

For example, in an illustration, the reference number 2X 37 means that two of the parts identified by reference number 37 are indicated.

Register your product at www.Toro.com

© The Toro Company - 2008
All Rights Reserved

Contents

Description	Page
Frame Assembly	3
Deck Lift and Seat Support Assembly	4
Seat Assembly	5
Control Assembly	6
Hydro Drive Assembly	7
RH Hydro No. 110-6771 Assembly	8
LH Hydro No. 110-6770 Assembly	9
Engine and Clutch Assembly	10
Styling and Fuel System Assembly	11
50 Inch Deck Assembly	12
50 Inch Deck Recycler Assembly	13
50 Inch Deck Spindle and Belt Drive Assembly	14
Electrical Assembly	15
Crankshaft Assembly Kohler SV610S-0022	16
Crankcase Assembly Kohler SV610S-0022	17
Oil Pan and Lubrication Assembly Kohler SV610S-0022	18
Head, Valve and Breather Assembly Kohler SV610S-0022	19
Ignition and Electrical Assembly Kohler SV610S-0022	20
Blower Housing and Baffle Assembly Kohler SV610S-0022	21
Starting System Assembly Kohler SV610S-0022	22
Fuel System Assembly Kohler SV610S-0022	23
Engine Control Assembly Kohler SV610S-0022	24
Air Intake and Filtration Assembly Kohler SV610S-0022	25
Exhaust Assembly Kohler SV610S-0022	26
Decal Assembly Kohler SV610S-0022	27
Attachments and Accessories List	28

Part Description Abbreviations

Part descriptions in this catalog may include the following abbreviations.

AR	as required
ASM	assembly
BBC	blade brake clutch
CARR	carriage
DEG	degrees
EXT	external
FH	flat head
GA	gauge
HD	heavy-duty
HF	hex flange
HH	hex head
HHF	hex head flange
HHFTF	hex head flange thread forming
HJ	hex jam
HLH	hex lag head
HOC	height-of-cut
HSBH	hex socket button head
HSFH	hex socket flat head
HSH	hex socket head
HWH	hex washer head
HWHTF	hex washer head thread forming
HYD	hydraulic
LH	left hand
NI	nylon insert
NPTF	national pipe thread fine
PFH	phillips flat head
PPH	phillips pan head
PPHTF	phillips pan head thread forming
PRH	phillips round head
PTH	phillips truss head
PTO	power-take-off
RH	right hand
ROPS	roll-over protection system
SFH	slotted fillister head
SHH	slotted hex head
SHWH	slotted hex washer head
SPH	slotted pan head
SQH	square head
SRH	slotted round head
STD	standard
TAP	self tapping
TTH	torx truss head

Footnotes

❶ Not illustrated

❷ Not serviced separately

❸ Obtain from your local Kohler dealer

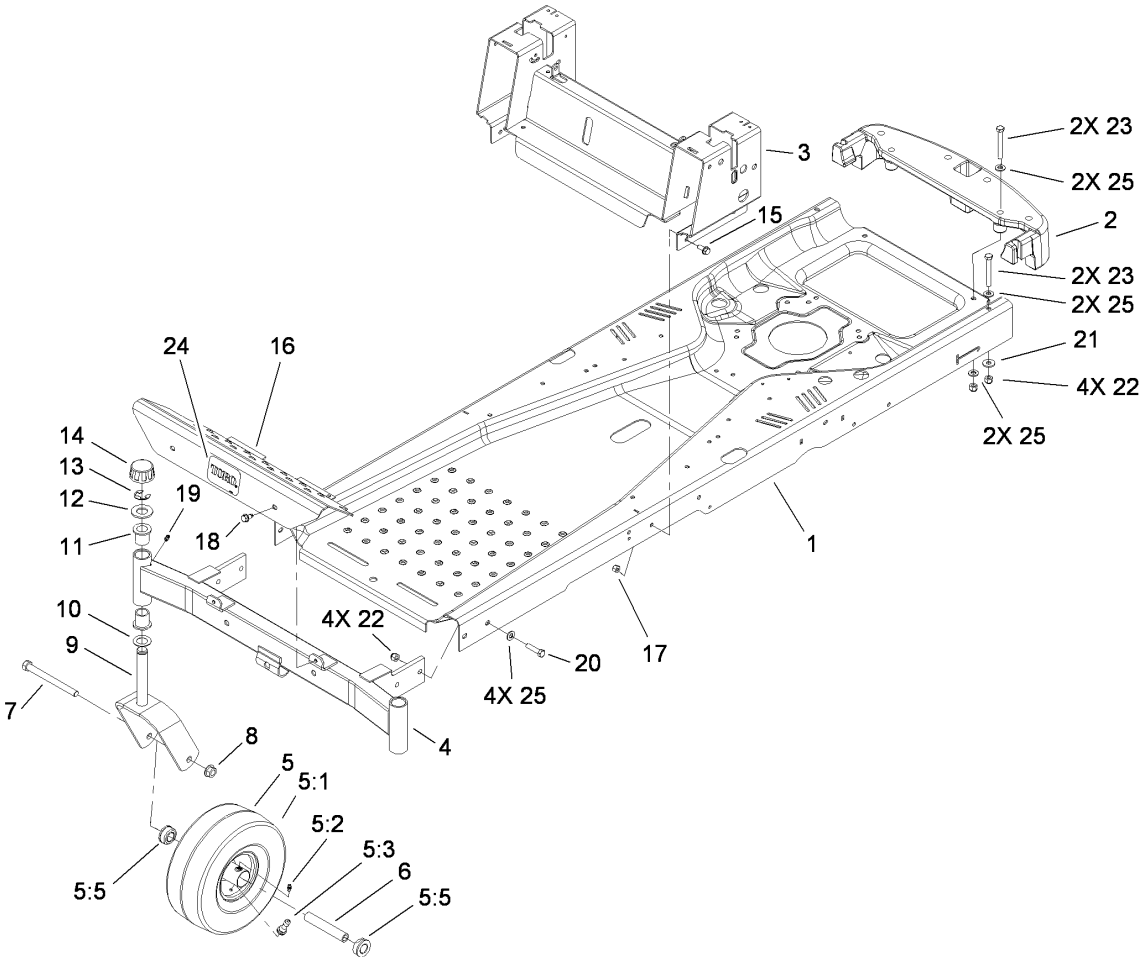

Frame Assembly

Ref	Part No.	Qty.	Description
1	115-2464-01	1	Frame
2	110-6899-03	1	Bumper-Rear
3	115-2468-03	1	Seat And Control ASM
4	108-7882-01	1	Front Axle ASM
5	110-6785	2	Castor Wheel ASM
5:1	110-6791	1	Tire-Smooth
5:2	302-5	1	Fitting-Grease
5:3	232-27	1	Stem-Valve
5:5	114-1640	2	Bushing-Flange
❶5:99	93-4244	1	Tube-Inner (W/Valve)
6	104-3667	2	Spanner-Wheel
7	325-22	2	Screw-HH
8	32128-23	2	Nut-HF
9	108-7851-01	2	Caster Fork ASM
10	110-6767	2	Washer-Thrust
11	1-303514	4	Bearing-Flanged
12	104-8076	2	Washer
13	32151-103	2	Ring-Retaining, EXT
14	61-9780	2	Cap-Hub
15	3234-47	7	Screw-HHF
16	108-7855-03	1	Footrest
17	3296-29	7	Nut-Lock, NI
18	32104-32	2	Screw-HWH
19	302-5	2	Fitting-Grease

Ref	Part No.	Qty.	Description
20	323-8	4	Screw-HH
21	80-6990	2	Washer-Hardened
22	3296-39	8	Nut-Lock, NI
23	323-13	4	Screw-HH
24	99-2385	1	Decal
25	3256-24	10	Washer-Flat

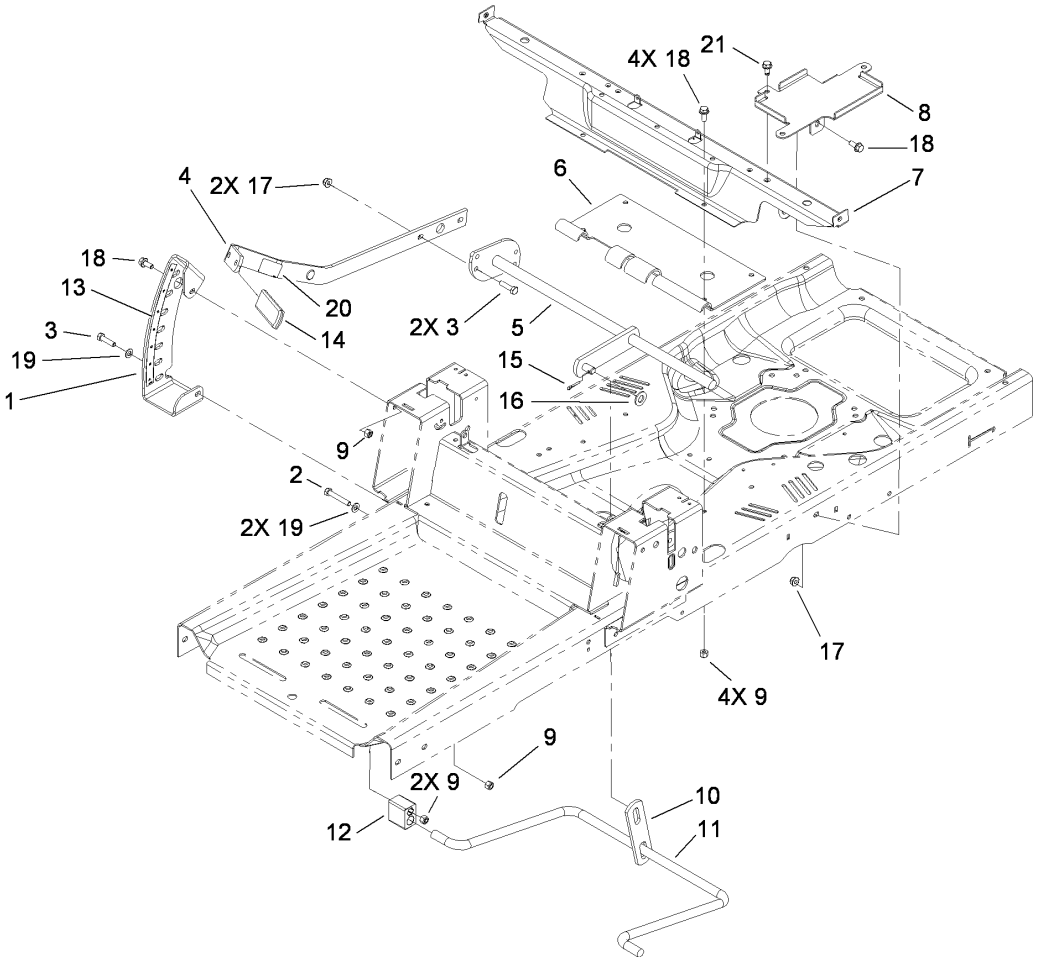

Deck Lift and Seat Support Assembly

Ref	Part No.	Qty.	Description
1	112-4027-03	1	Sector-HOC
2	322-10	2	Screw-HH
3	322-6	3	Screw-HH
4	112-3960-03	1	Lift Arm ASM
5	108-7841-03	1	Lift Lever ASM
6	110-6800-03	1	Plate-Lift
7	110-6805-03	1	Bracket-Seat/Pods
8	110-1937-03	1	Tray-Battery
9	3296-29	8	Nut-Lock, NI
10	108-7840	1	Link-Lift
11	108-7839	1	Arm-Lift, Rear
12	108-7845	2	Block-Pivot
13	110-6824	1	Decal-HOC
14	105-3450	1	Grip-Lever, Lift
15	3272-10	1	Pin-Cotter
16	3256-26	1	Washer-Flat
17	104-8300	3	Nut-Flange, NI
18	3234-47	6	Screw-HHF
19	3256-23	3	Washer-Flat
20	106-8743	1	Decal
21	32104-32	1	Screw-HWH

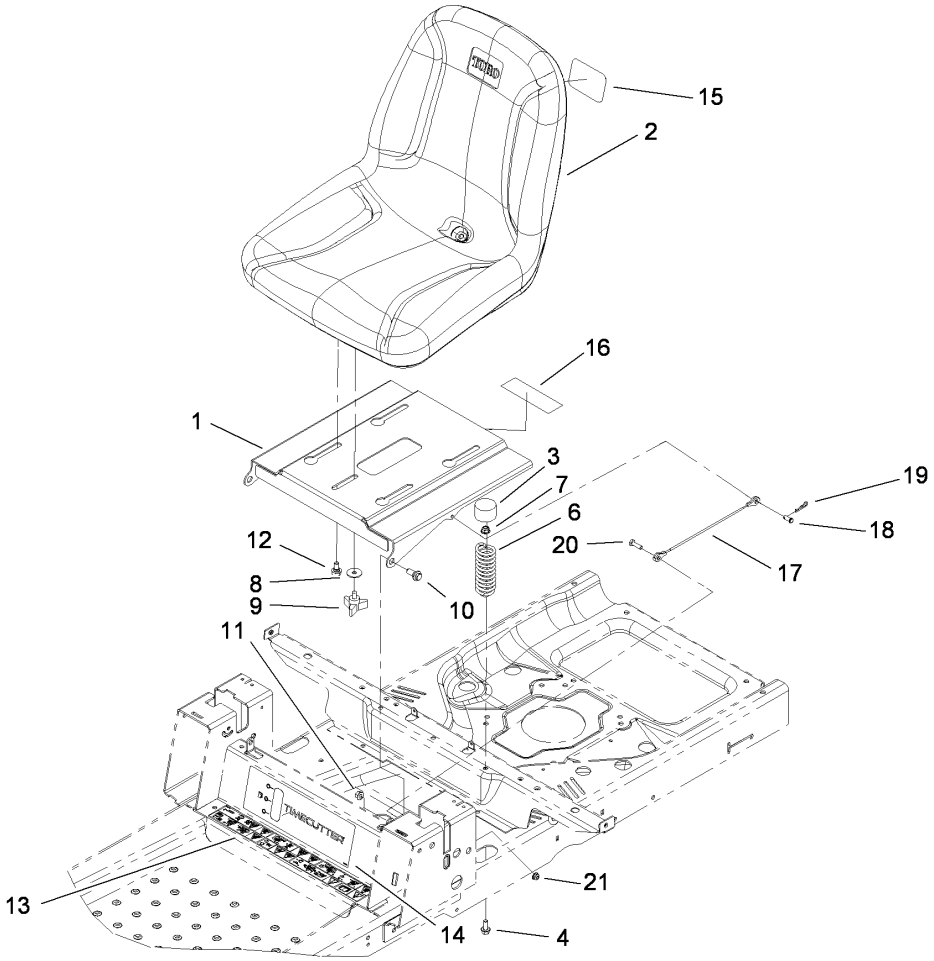

Seat Assembly

Ref	Part No.	Qty.	Description
1	115-2465-03	1	Base-Seat
2	110-6772	1	Seat-18 Inch
3	701178	2	Cap-Protector
4	3234-47	2	Screw-HHF
6	92-7054	2	Spring-Compression
7	104-8300	2	Nut-Flange, NI
8	5-4460	1	Washer-Pivot
9	92-9674	1	Knob
10	94-7582	2	Bolt-Shoulder
11	32128-21	2	Nut-HF
12	37-8771	4	Bolt-Shoulder
13	115-2469	1	Decal-Danger
14	115-2451	1	Decal-Timecutter
15	99-2385	1	Decal
16	106-8717	1	Decal-Service
17	109-2628	1	Cable-Stop, Seat
18	60-1730	1	Pin-Clevis
19	1-806003	1	Pin-Hair
20	321-5	1	Screw-HH
21	104-7201	1	Nut-HF

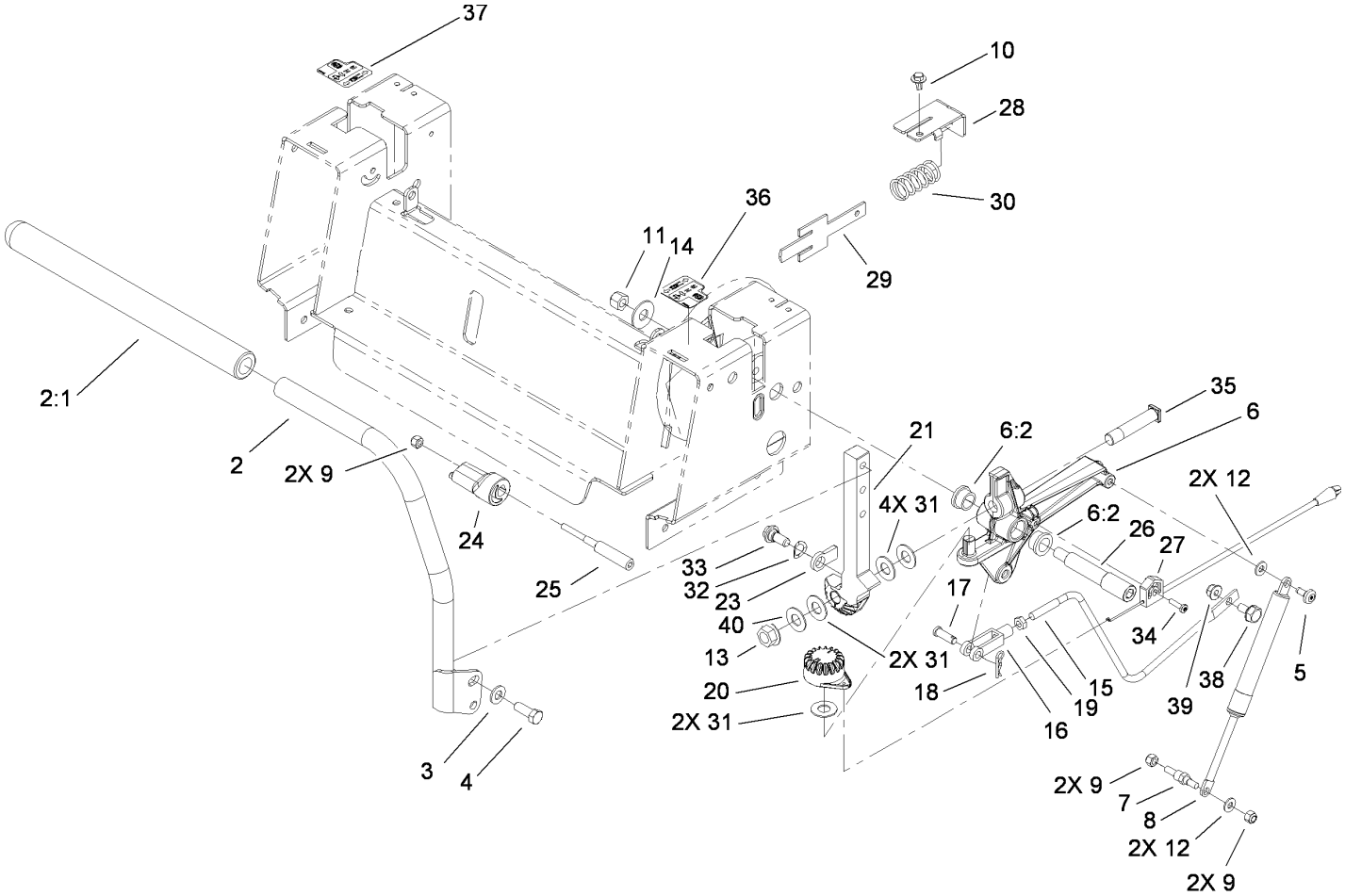

Control Assembly

Ref	Part No.	Qty.	Description
❶1	110-6814	1	RH Handle ASM
❶1:1	108-6187	1	Grip
2	110-6815	1	LH Handle ASM
2:1	108-6187	1	Grip
3	3256-24	4	Washer-Flat
4	323-6	4	Screw-HH
5	112-4004	2	Screw-Shoulder
6	110-6828	2	Activator Arm ASM
6:2	105-3455	2	Bushing
7	110-6810	2	Stud-Damper
8	103-2913	2	Damper-Control, Motion
9	3296-42	6	Nut-Lock, NI
10	46-8560	2	Screw-HHF
11	3296-48	2	Nut-Lock, NI
12	3256-22	4	Washer-Flat
13	32128-23	2	Nut-HF
14	3256-5	2	Washer-Flat
15	110-6693	2	Link-Hydro
16	1-303105	2	Yoke-Adjustable
17	1-808280	2	Pin-Clevis
18	1-806003	2	Pin-Hair
19	3220-2	2	Nut-Jam
20	110-6845	2	Gear-Control
21	110-6783-03	1	Arm-Actuator, LH

Ref	Part No.	Qty.	Description
❶22	110-6782-03	1	Arm-Actuator, RH
23	110-6856	2	Tab-Stop
24	110-6873	2	Eccentric
25	110-6874	2	Screw-Eccentric
26	110-6875	2	Bolt-Shoulder
27	110-6858	2	Cable-Brake, Parking
28	110-6751	2	Bracket-Return
29	110-6750	2	Plate-Return
30	110-6752	2	Spring
31	110-6894	8	Washer-Pivot
32	3290-221	2	Washer-Spring
33	94-7582	2	Bolt-Shoulder
34	110-0863	2	Screw-Torx
35	110-6784	2	Bolt-Shoulder
36	112-9750	1	Decal-Contol Lever, LH
37	112-9751	1	Decal-Control Lever, RH
38	37-8771	2	Bolt-Shoulder
39	104-8300	2	Nut-Flange, NI
40	112-9771	2	Washer-Teflon

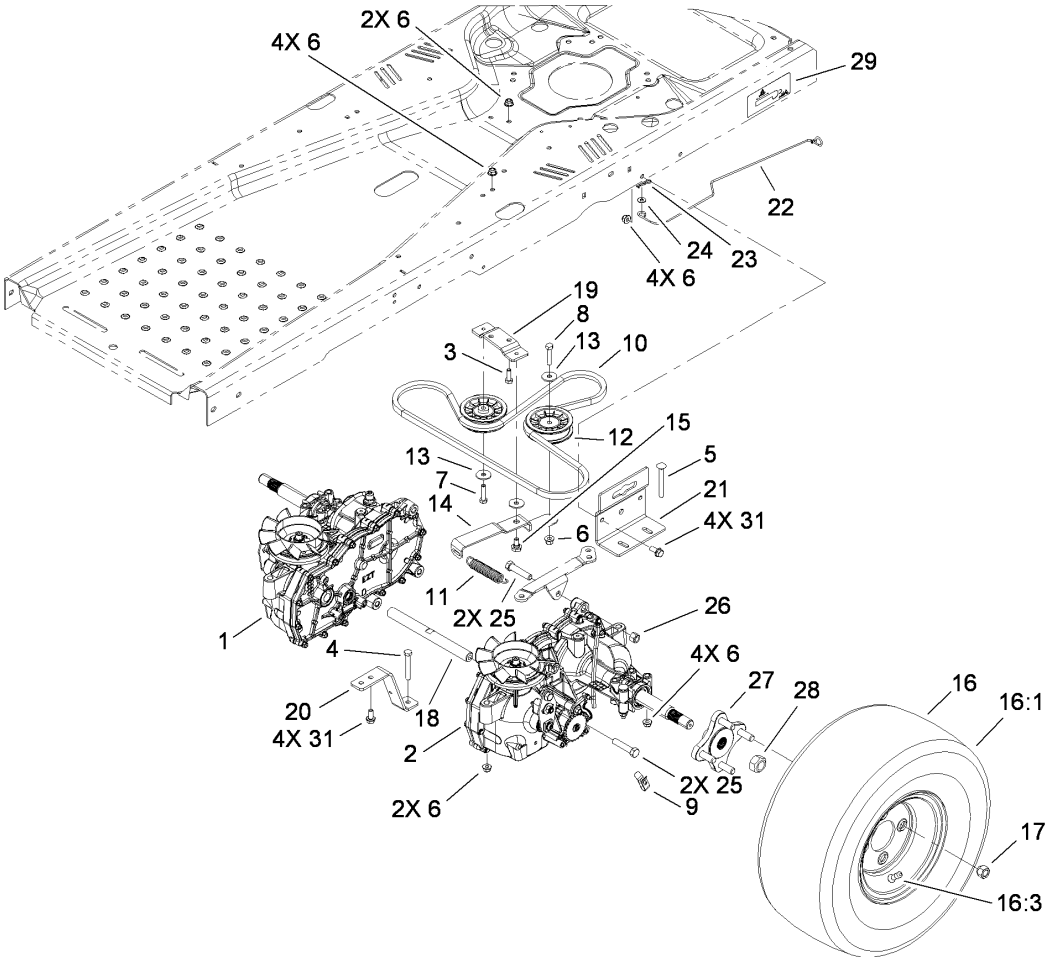

Hydro Drive Assembly

Ref	Part No.	Qty.	Description
1	110-6771	1	Hydro-RH
2	110-6770	1	Hydro-LH
3	322-4	2	Screw-HH
4	322-11	2	Screw-HH
5	3230-9	4	Screw-CARR
6	104-8300	17	Nut-Flange, NI
7	322-6	1	Screw-HH
8	322-7	1	Screw-HH
9	110-6677	2	Clip-Spring
10	110-6774	1	V-Belt
11	63-1590	1	Spring-Idler
12	110-6775	2	Pulley-Idler
13	5-4460	3	Washer-Pivot
14	110-1925	1	Arm-Idler
15	37-8771	1	Bolt-Shoulder
16	110-6883	2	Wheel And Tire ASM
16:1	110-6887	1	Tire
16:3	232-27	1	Stem-Valve
❶16:99	232-37	1	Tube
17	242-50	8	Nut-Lug
18	110-6807	1	Shaft-Cross
19	110-1926	1	Plate-Pivot
20	110-6806-03	2	Strap-Torque
21	110-6878-03	2	Support-Hydro

Ref	Part No.	Qty.	Description
22	110-6787	2	Rod-Bypass
23	1-806003	2	Pin-Hair
24	3256-22	2	Washer-Flat
25	324-8	4	Screw-HH
26	3296-48	2	Nut-Lock, NI
27	112-3979	2	Hub ASM
28	112-3982	2	Nut-Lock
29	114-8532	1	Decal-Transport, LH
❶30	114-8531	1	Decal-Transport, RH
31	3234-47	8	Screw-HHF

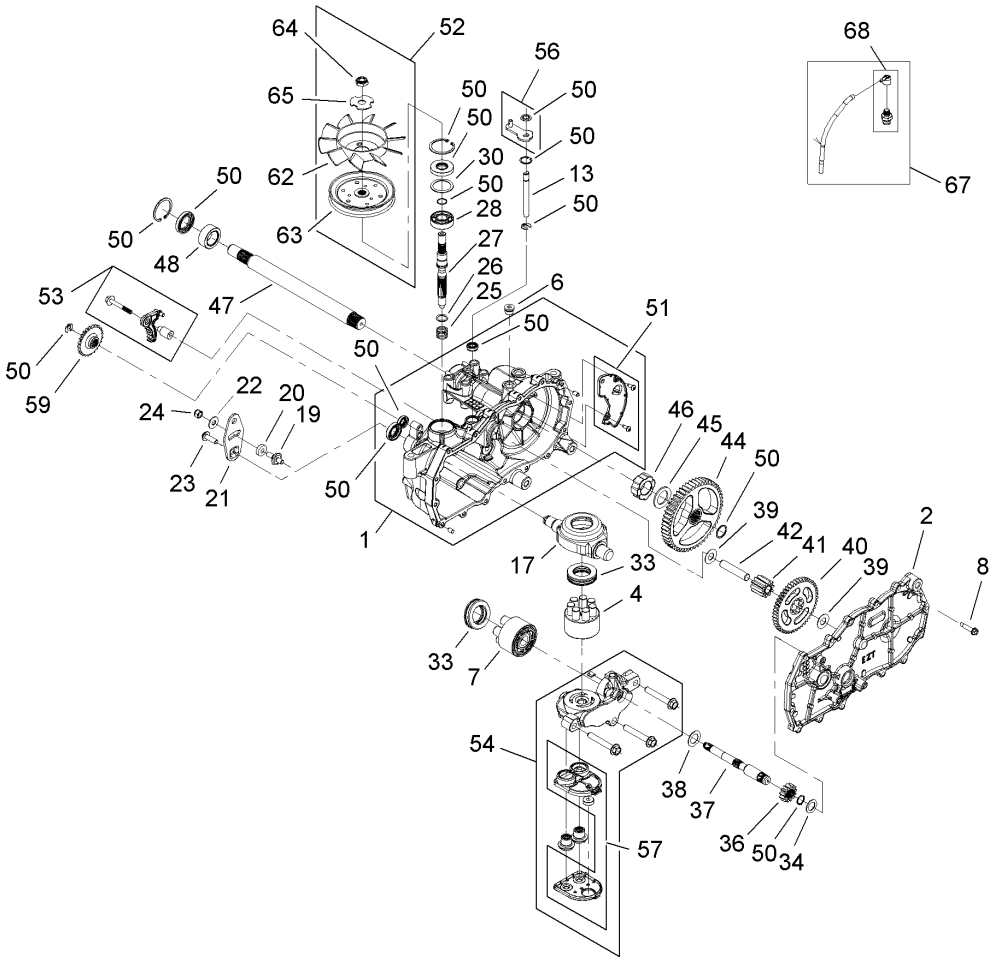

RH Hydro No. 110-6771 Assembly

Ref	Part No.	Qty.	Description
1	114-1630	1	RH Main Housing ASM
2	114-1631	1	RH Side ASM
4	110-8561	1	Pump Block ASM
6	112-9850	1	Plug
7	103-2666	1	Cylinder Block Kit
8	104-5305	16	Screw-HHF
13	106-8678	1	Rod-Bypass
17	104-5304	1	Swashplate-Trunnion
19	104-2116	1	Stud
20	112-9853	1	Puck-Friction
21	106-8747	1	Arm-Control
22	5-4460	1	Washer-Pivot
23	107-2488	1	Screw
24	105-1872	1	Nut
25	94-1936	1	Spring-Block
26	94-1937	1	Washer-Block, Thrust
27	104-5306	1	Shaft-Input
28	104-5311	1	Bearing-Ball
30	104-5308	1	Spacer
33	94-6922	2	Bearing-Thrust
34	104-5339	1	Washer-Flat
36	104-5316	1	Gear-Pinnion, 13T
37	114-1632	1	Shaft, Motor
38	104-5360	1	Washer-Shaft, Motor

Ref	Part No.	Qty.	Description
39	94-1933	2	Washer
40	104-5317	1	Gear
41	104-5318	1	Gear-Jackshaft, 10T
42	104-5329	1	Pin-Jackshaft
44	112-9855	1	Gear-52T Bull
45	112-9856	1	Washer
46	112-9857	1	Bearing-Sleeve
47	112-9858	1	Shaft-Axle
48	112-9859	1	Bushing-Axle
50	106-8686	1	Seal Kit
51	106-8697	1	RH Expansion Plate Kit
52	106-8698	1	Fan Pulley Kit
53	114-1633	1	Brake Arm Kit
54	112-9861	1	RH Center Section Filter Kit
❶55	112-9863	1	Tube-Sealant
56	107-2489	1	Bypass Arm Kit
57	114-1634	1	Filter Kit
59	106-8694	1	Disc-Brake, Cog
62	110-8566	1	Fan-6 Inch, 10 Blade
63	104-1754	1	Pulley
64	105-1875	1	Nut-Lock
65	107-9122	1	Washer-Slotted
67	112-9866	1	Breather Kit
68	114-1635	1	Breather ASM

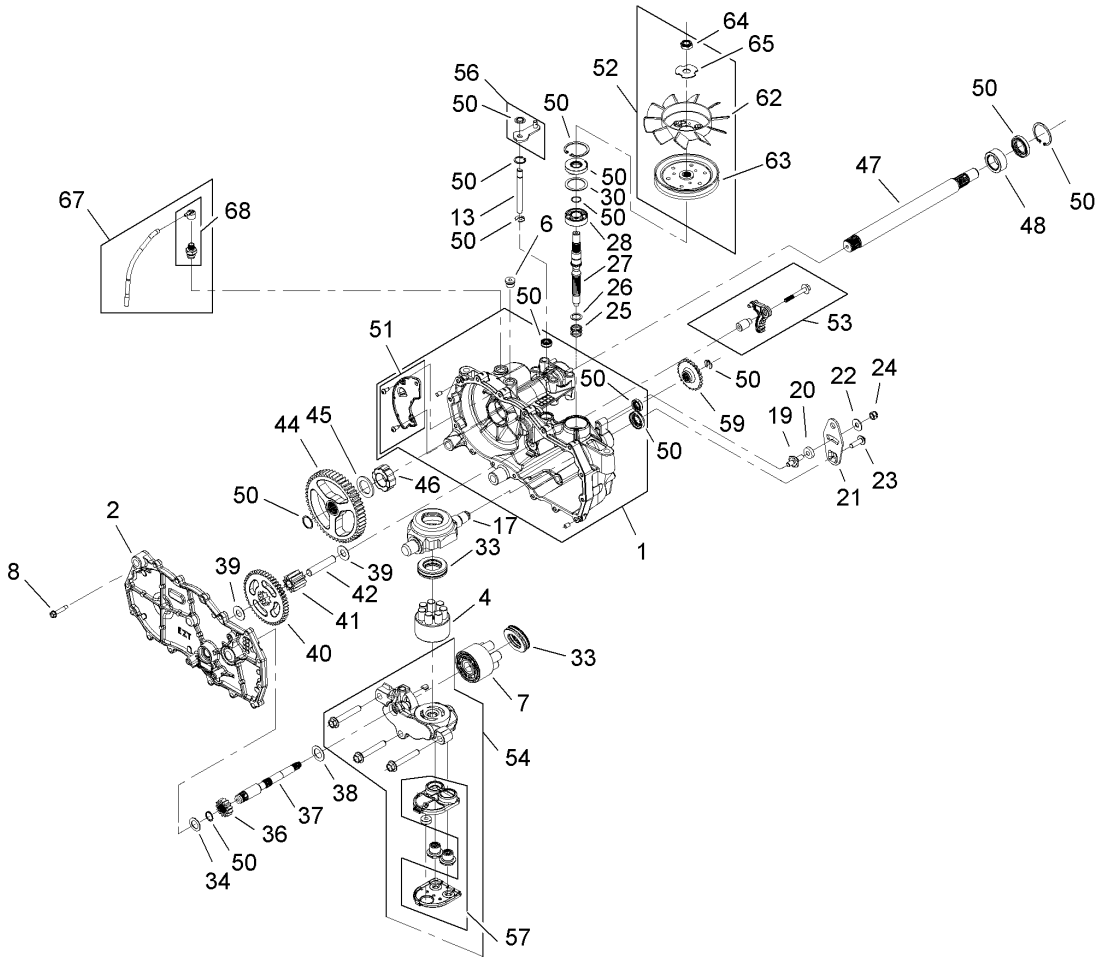

LH Hydro No. 110-6770 Assembly

Ref	Part No.	Qty.	Description
1	114-1636	1	LH Main Housing ASM
2	114-1637	1	LH Side ASM
4	110-8561	1	Pump Block ASM
6	112-9850	1	Plug
7	103-2666	1	Cylinder Block Kit
8	104-5305	16	Screw-HHF
13	106-8678	1	Rod-Bypass
17	104-5304	1	Swashplate-Trunnion
19	104-2116	1	Stud
20	112-9853	1	Puck-Friction
21	106-8747	1	Arm-Control
22	5-4460	1	Washer-Pivot
23	107-2488	1	Screw
24	105-1872	1	Nut
25	94-1936	1	Spring-Block
26	94-1937	1	Washer-Block, Thrust
27	104-5306	1	Shaft-Input
28	104-5311	1	Bearing-Ball
30	104-5308	1	Spacer
33	94-6922	2	Bearing-Thrust
34	104-5339	1	Washer-Flat
36	104-5316	1	Gear-Pinnion, 13T
37	114-1632	1	Shaft, Motor
38	104-5360	1	Washer-Shaft, Motor

Ref	Part No.	Qty.	Description
39	94-1933	2	Washer
40	104-5317	1	Gear
41	104-5318	1	Gear-Jackshaft, 10T
42	104-5329	1	Pin-Jackshaft
44	112-9855	1	Gear-52T Bull
45	112-9856	1	Washer
46	112-9857	1	Bearing-Sleeve
47	112-9858	1	Shaft-Axle
48	112-9859	1	Bushing-Axle
50	106-8686	1	Seal Kit
51	106-8687	1	LH Expansion Plate Kit
52	106-8698	1	Fan Pulley Kit
53	114-1633	1	Brake Arm Kit
54	112-9862	1	LH Center Section Filter Kit
❶55	112-9863	1	Tube-Sealant
56	107-2489	1	Bypass Arm Kit
57	114-1634	1	Filter Kit
59	106-8694	1	Disc-Brake, Cog
62	110-8566	1	Fan-6 Inch, 10 Blade
63	104-1754	1	Pulley
64	105-1875	1	Nut-Lock
65	107-9122	1	Washer-Slotted
67	112-9866	1	Breather Kit
68	114-1635	1	Breather ASM

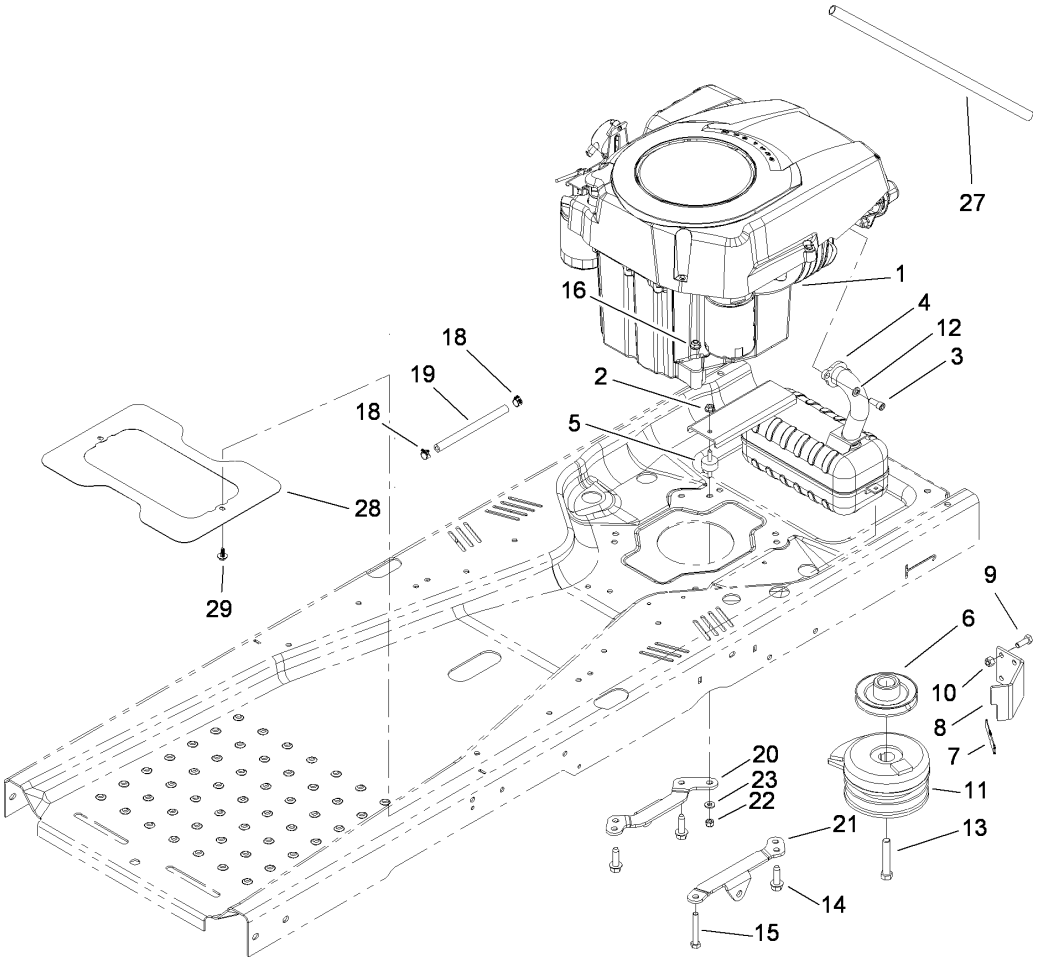

Engine and Clutch Assembly

Ref	Part No.	Qty.	Description
❷❸1		1	Engine-Kohler, Sv610S-0022
2	32128-33	1	Nut-HF
3	3274-10	2	Screw-HSH
4	112-4024	1	Muffler-Kohler
5	112-3976	1	Isolator
6	114-1622	1	Pulley-Engine
7	112-4033	1	Bumper
8	110-6896	1	Stop-Clutch
9	322-4	2	Screw-HH
10	3296-29	2	Nut-Lock, NI
11	110-6766	1	Clutch-Electric, PTO
12	3253-4	2	Washer-Lock
13	3212-11	1	Screw-HH
14	32144-109	3	Screw
15	322-11	1	Screw-HH
16	104-8300	1	Nut-Flange, NI
18	2412-98	2	Clamp
19	109-0306	1	Hose-Fuel
20	110-6798	1	Support-Hydro, RH
21	110-6799	1	Support-Hydro, LH
22	3296-42	1	Nut-Lock, NI
23	3256-22	1	Washer-Flat
27	106-7022	1	Tube-Drain, Oil
28	114-8544	1	Shield-Heat

Ref	Part No.	Qty.	Description
29	46-8560	2	Screw-HHF

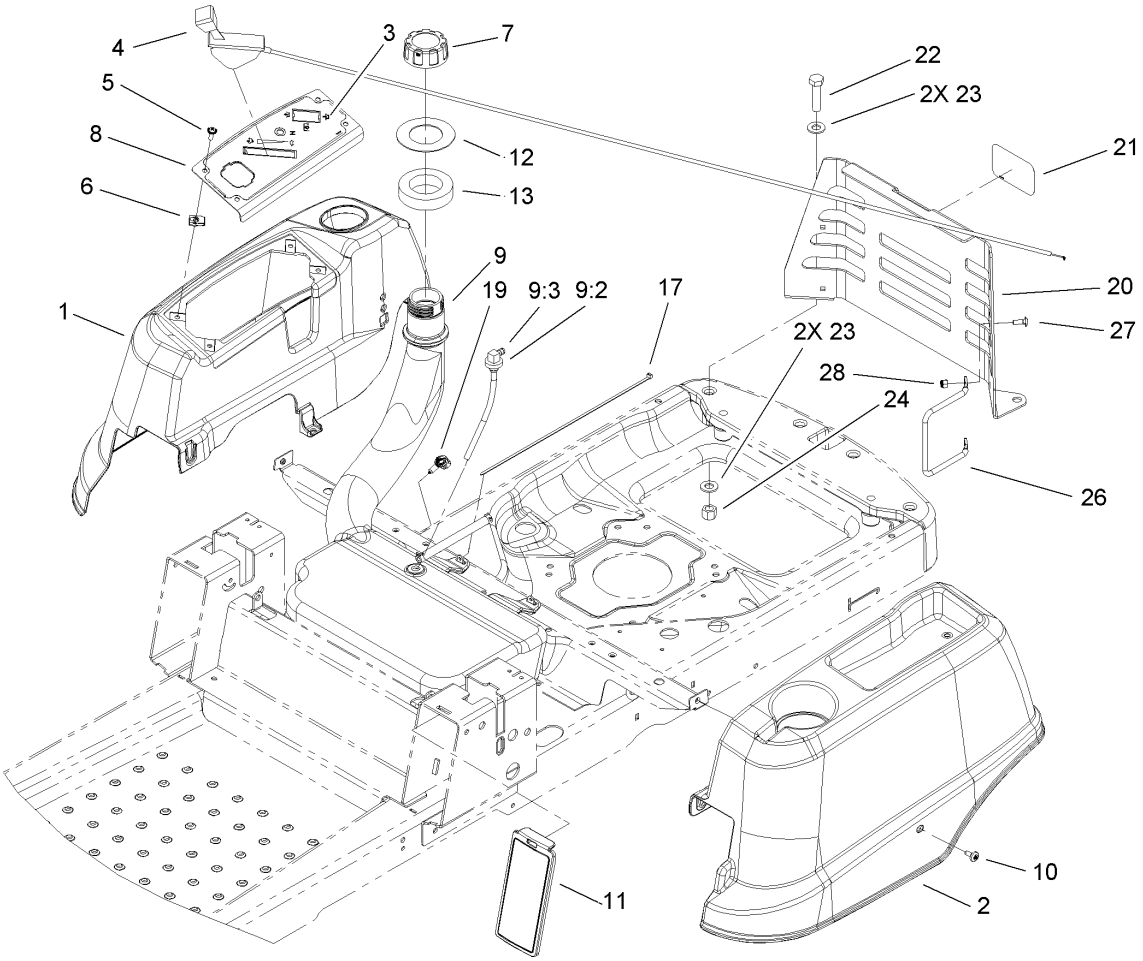

Styling and Fuel System Assembly

Ref	Part No.	Qty.	Description
1	110-1901	1	Pod-RH
2	110-1902	1	Pod-LH
3	115-2500	1	Decal-Panel, Control
4	104-3626	1	Cable-Throttle
5	3258-166	4	Screw-PRH
6	107069	4	Clip
7	93-7198	1	Gas Cap ASM
8	110-1927-03	1	Panel-Control
9	110-6890	1	Fuel Tank ASM
9:2	46-6560	1	Bushing
9:3	95-3970	1	Fitting-90 Degree
10	112-4004	6	Screw-Shoulder
11	110-6786	2	Cover-Control
12	112-9760	1	Washer-Rubber
13	55-9310	1	Seal-Foam
17	100-9064	1	Tie-Cable
19	32180-037	1	Clip-Harness
20	110-6685-03	1	Support-Cover, Rear
21	99-2385	1	Decal
22	325-8	2	Screw-HH
23	3256-26	4	Washer-Flat
24	3296-23	2	Nut-Lock, NI
26	112-4022	1	Guard-Muffler
27	3229-1	2	Screw-CARR

Ref	Part No.	Qty.	Description
28	3296-42	2	Nut-Lock, NI

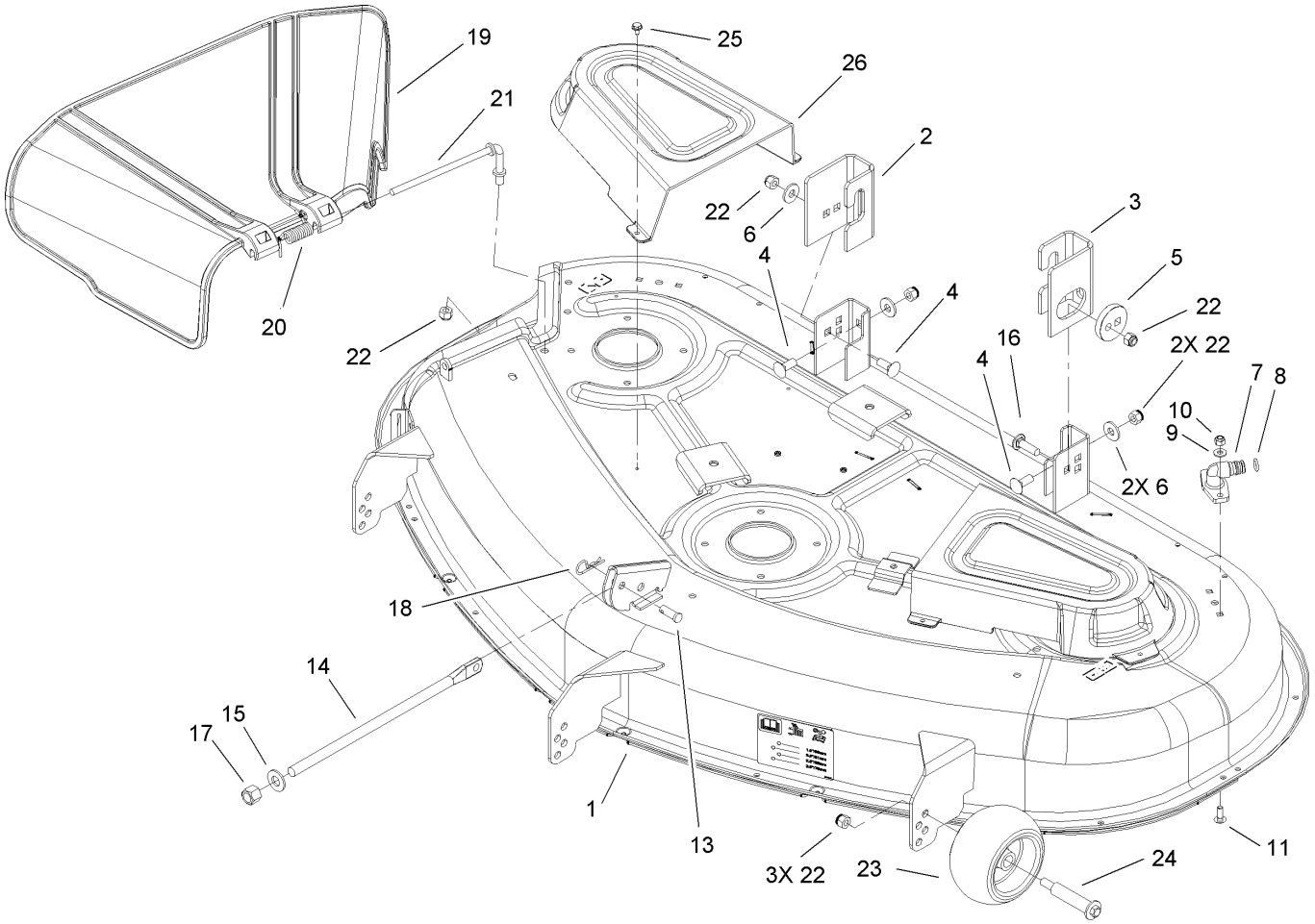

50 Inch Deck Assembly

Ref	Part No.	Qty.	Description
1	110-6790	1	50 Inch Deck ASM
2	108-7836	1	Bracket-Hanger, Right Rear
3	108-7838	1	Bracket-Hanger, Left Rear
4	3231-2	3	Screw-CARR
5	112-3980	1	Eccentric
6	80-6990	3	Washer-Hardened
7	95-2747	2	Fitting-Washout
8	46-6290	2	O-Ring
9	3256-22	4	Washer-Flat
10	3296-42	4	Nut-Lock, NI
11	3229-1	4	Screw-CARR
13	1-808284	1	Pin-Clevis
14	108-7847	1	Rod-Lift
15	87-7270	1	Washer-Thrust
16	3231-28	1	Screw-CARR
17	3296-23	1	Nut-Lock, NI
18	9335054	1	Pin-Hair
19	108-7895	1	Deflector-50 Inch
20	110-6694	1	Spring-Torsion
21	112-3950	1	Rod-Pivot
22	3296-39	8	Nut-Lock, NI
23	1-603299	3	Roller-Scalp, Anti
24	112-3977	3	Bolt-Shoulder
25	32104-76	6	Screw

Ref	Part No.	Qty.	Description
26	108-7890	2	Cover-Belt

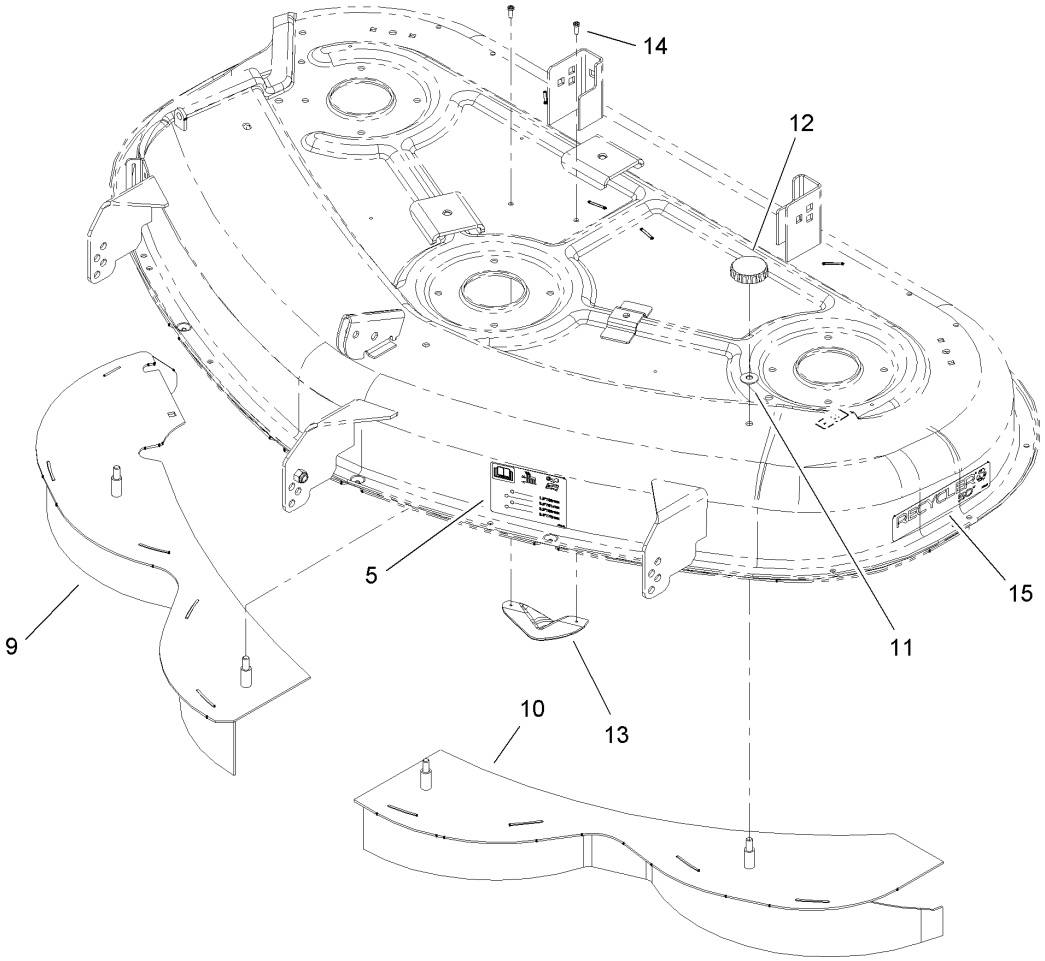

50 Inch Deck Recycler Assembly

Ref	Part No.	Qty.	Description
5	112-9840	1	Decal-Anti Scalp
9	112-4010-03	1	RH Baffle ASM
10	112-4011-03	1	LH Baffle ASM
11	3290-456	4	Washer-Belleville
12	94-5583	4	Knob
13	76-2160	3	Plate-Kicker
14	32144-111	6	Screw-PPH
15	110-6650	1	Decal

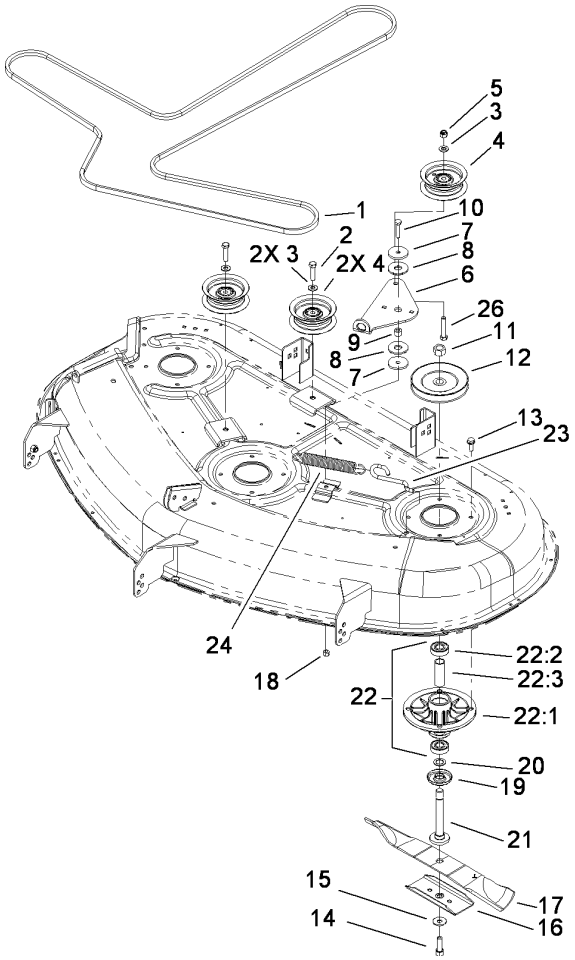

50 Inch Deck Spindle and Belt Drive Assembly

Ref	Part No.	Qty.	Description
1	110-6892	1	V-Belt
2	323-8	2	Screw-HH
3	3256-24	3	Washer-Flat
4	106-2175	3	Pulley-Idler, Flat
5	3296-39	1	Nut-Lock, NI
6	114-8540	1	Arm-Idler
7	115-2455	2	Spacer
8	114-0463	2	Washer-Friction, Composite
9	114-8549	1	Bushing
10	322-7	1	Screw-HH
11	3219-6	3	Nut-Hex
12	110-6865	3	Pulley
13	32144-41	12	Screw-Taptite
14	26-0671	3	Screw-Blade
15	3290-465	3	Washer-Belleville
16	106-2248-03	3	Stiffener-Blade
17	112-9759-03	3	Blade-17.50 Inch
18	3296-29	1	Nut-Lock, NI
19	80-4360	3	Shield-Bearing
20	80-4380	3	Spacer
21	110-6866	3	Shaft-Spindle
❷22		3	Spindle ASM
22:1	88-4510	1	Housing-Spindle
22:2	100-1048	2	Bearing-Ball

Ref	Part No.	Qty.	Description
22:3	62-3661	1	Spacer-Bearing
23	112-3973	1	Hook-Return, Spring
24	1-603414	1	Spring-Extension
26	323-10	1	Screw-HH

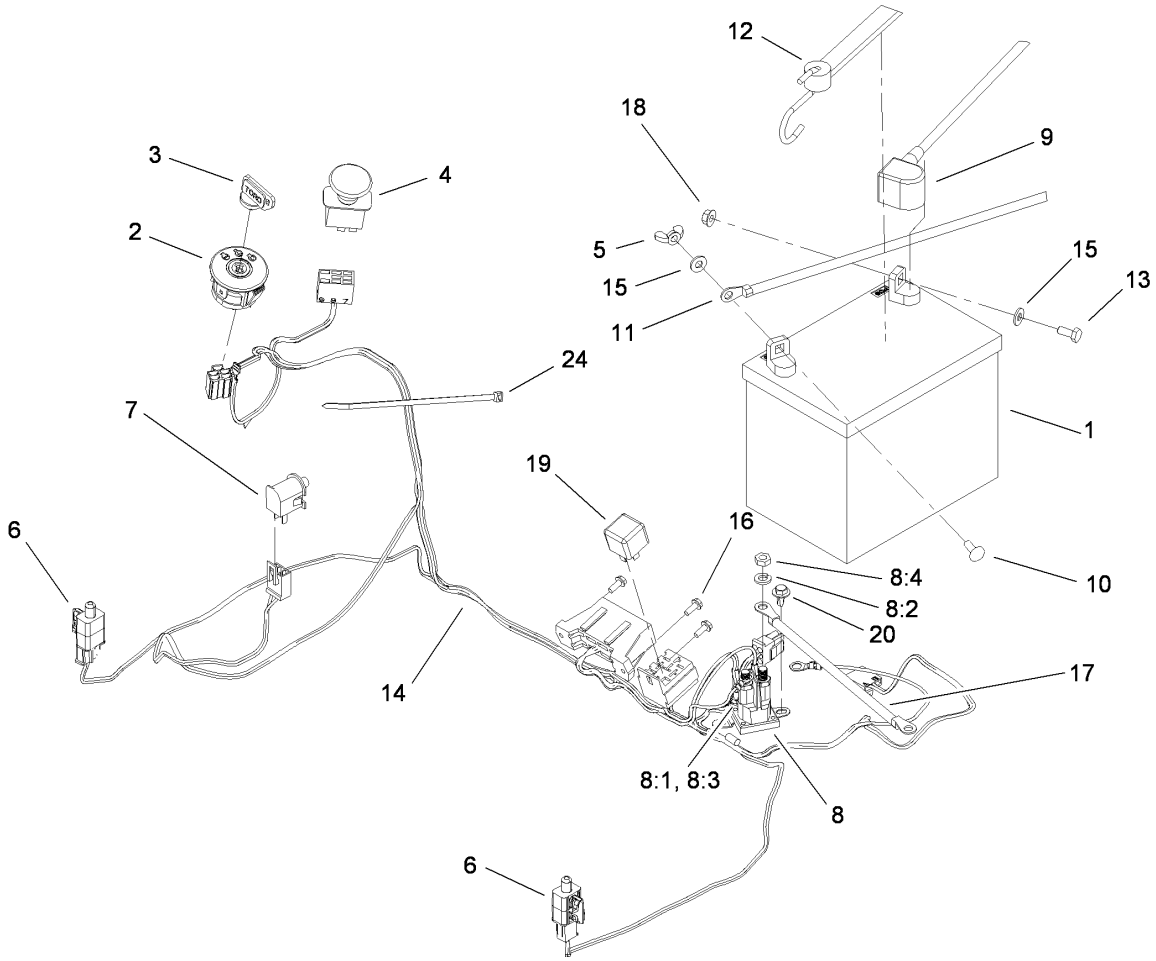

Electrical Assembly

Ref	Part No.	Qty.	Description
1	104-2493	1	Battery
2	110-6764	1	Switch-Ignition
3	63-8360	1	Key-Ignition
4	93-9998	1	Switch-PTO
5	32103-22	1	Nut-Wing
6	110-6765	2	Switch-Single Pole No
7	82-2190	1	Switch-Bail
8	1-513075	1	Switch-Solenoid
8:1	3253-17	2	Washer-Lock
8:2	3253-4	2	Washer-Lock
8:3	3219-14	2	Nut-Hex
8:4	3220-2	2	Nut-Jam
9	110-6794	1	Cable-Battery, Red
10	3229-1	1	Screw-CARR
11	110-6793	1	Cable-Battery, Black
12	104-2466	1	Holddown-Battery
13	321-3	1	Screw-HH
14	114-8533	1	Harness-Wire
15	3256-22	2	Washer-Flat
16	32144-1	3	Screw-Taptite
17	110-6792	1	Cable-Battery, Red
18	32128-33	2	Nut-HF
19	98-7249	1	Relay
20	46-8560	2	Screw-HHF

Ref	Part No.	Qty.	Description
24	614249	1	Strap-Tie

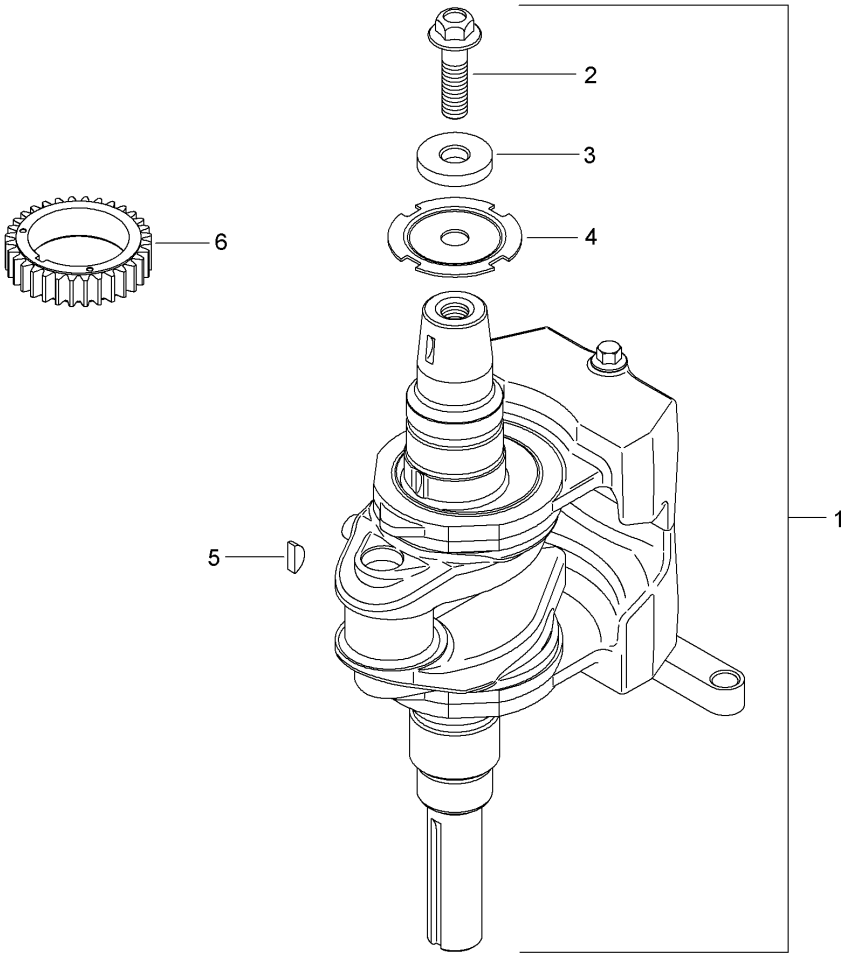

Crankshaft Assembly
Kohler SV610S-0022

Ref	Part No.	Qty.	Description
❸1	20 014 24-S	1	Crankshaft Kit
❸2	25 086 125-S	1	Screw-Flange, Hex
❸3	25 468 09-S	1	Washer-Flat
❸4	20 146 05-S	1	Plate-Mounting, Fan
❸5	X-42-15-S	1	Key (.19 X .62)
❸6	20 043 12-S	1	Gear-Crankshaft

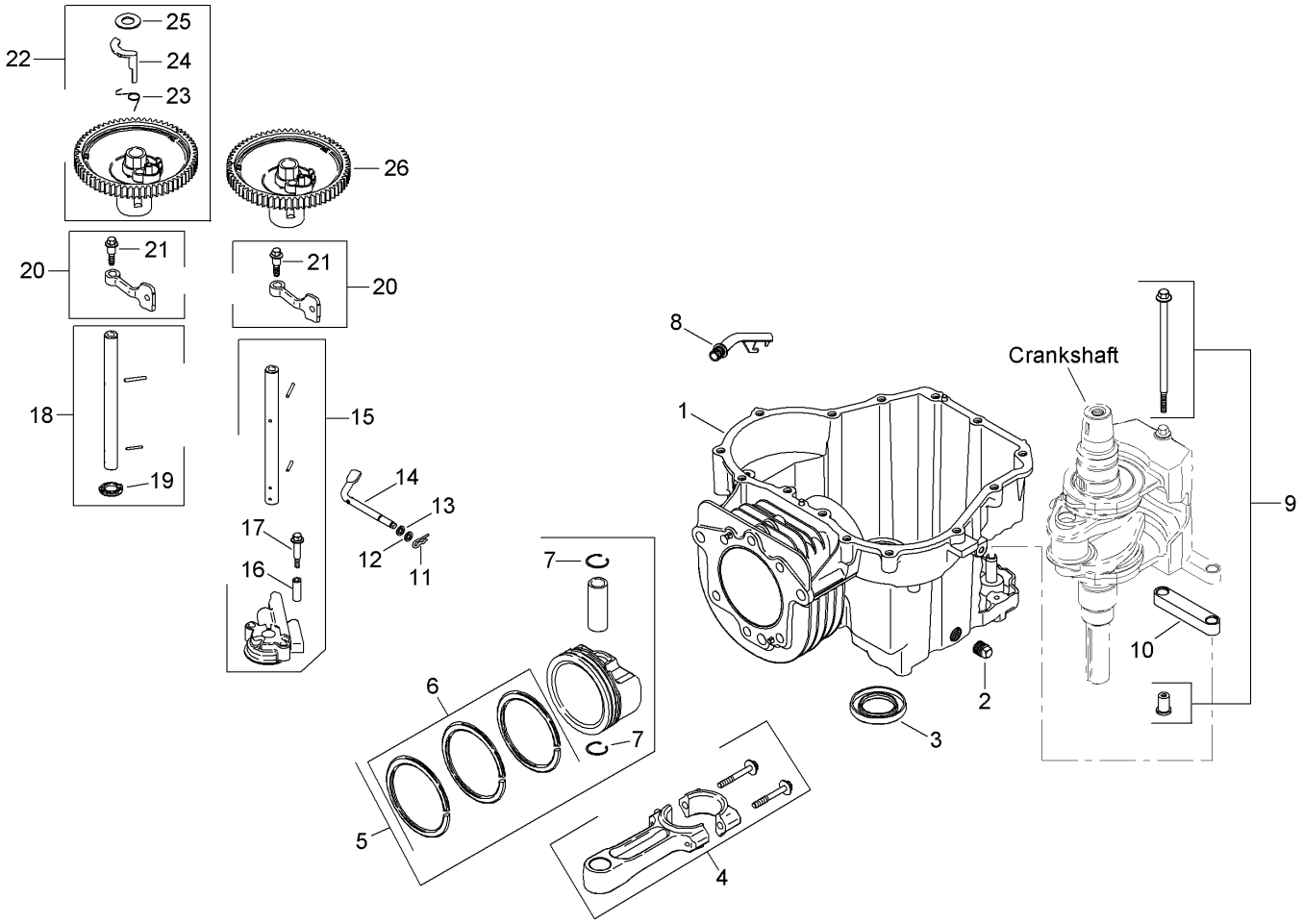

Crankcase Assembly
Kohler SV610S-0022

Ref	Part No.	Qty.	Description
❸1	20 522 04	1	Crankcase (Sv610 Short Block)
❸2	25 139 57-S	1	Plug-Solid, Square Head (.38)
❸3	20 032 01-S	1	Seal-Oil
❸4	20 067 04-S	1	Connecting Rod ASM
❸5	20 874 01-S	1	Piston And Ring Set (94 Mm)
❸6	20 108 01-S	1	Ring Set (94 Mm)
❸7	20 018 04-S	2	Retainer-Pin, Piston
❸8	20 123 02-S	1	Tube-Back, Drain
❸9	20 380 16-S	1	Locating Pin ASM
❸10	20 186 02-S	1	Linkage-Weight, Balance
❸11	12 154 05-S	1	Clip-Pin, Hitch
❸12	M-631015-S	1	Washer-Flat (6Mm)
❸13	X-25-102-S	1	Washer-Flat (1/4)
❸14	20 144 02-S	1	Shaft-Cross, Governor
❸15	20 393 02-S	1	Oil Pump ASM
❸16	20 112 02-S	2	Spacer-Screw, Oil Pump
❸17	20 086 13-S	2	Screw-Pump, Oil
❸18	20 144 11-S	1	Camshaft Center ASM (Exhaust
❸19	20 468 08-S	1	Washer-Thrust
❸20	20 090 01-S	2	Cam Lever ASM
❸21	20 086 06-S	2	Bolt-Shoulder (M6X1X26)
❸22	20 010 06-S	1	Cam Gear ASM (Exhaust)
❸23	20 089 06-S	1	Spring-A C R
❸24	20 044 16-S	1	Weight-A C R

Ref	Part No.	Qty.	Description
❸25	20 468 03-S	1	Washer-Thrust, A C R
❸26	20 010 05-S	1	Cam Gear ASM (Intake)

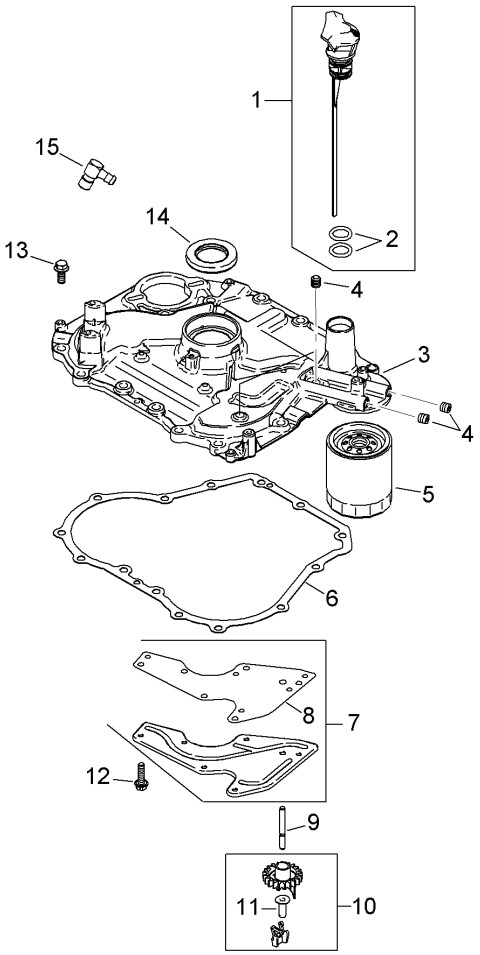

Oil Pan and Lubrication Assembly
Kohler SV610S-0022

Ref	Part No.	Qty.	Description
❸1	20 040 02-S	1	Dipstick Blade Kit (Yellow)
❸2	20 153 01-S	2	O Ring-Dipstick
❸3	20 009 21-S	1	Closure Plate ASM
❸4	25 139 60-S	4	Plug-Hex, Countersunk (.125)
❸5	12 050 01-S	1	Filter-Oil
❸6	20 041 01-S	1	Gasket-Plate, Closure
❸7	20 096 02-S	1	Oil Passage Cover Kit
❸8	20 041 02-S	1	Gasket-Passage, Oil
❸9	20 144 03-S	1	Shaft-Gear, Governor
❸10	20 310 01-S	1	Governor Gear ASM
❸11	12 380 01-S	1	Pin-Regulating, Governor
❸12	M-545013-S	6	Screw-Flange, Hex (M5X0.8X13)
❸13	25 086 127-S	14	Screw-Flange, Hex (1/2 Dog Point)
❸14	20 032 01-S	1	Seal-Oil
❸15	25 155 02-S	1	Connector-Hose, 90 DEG

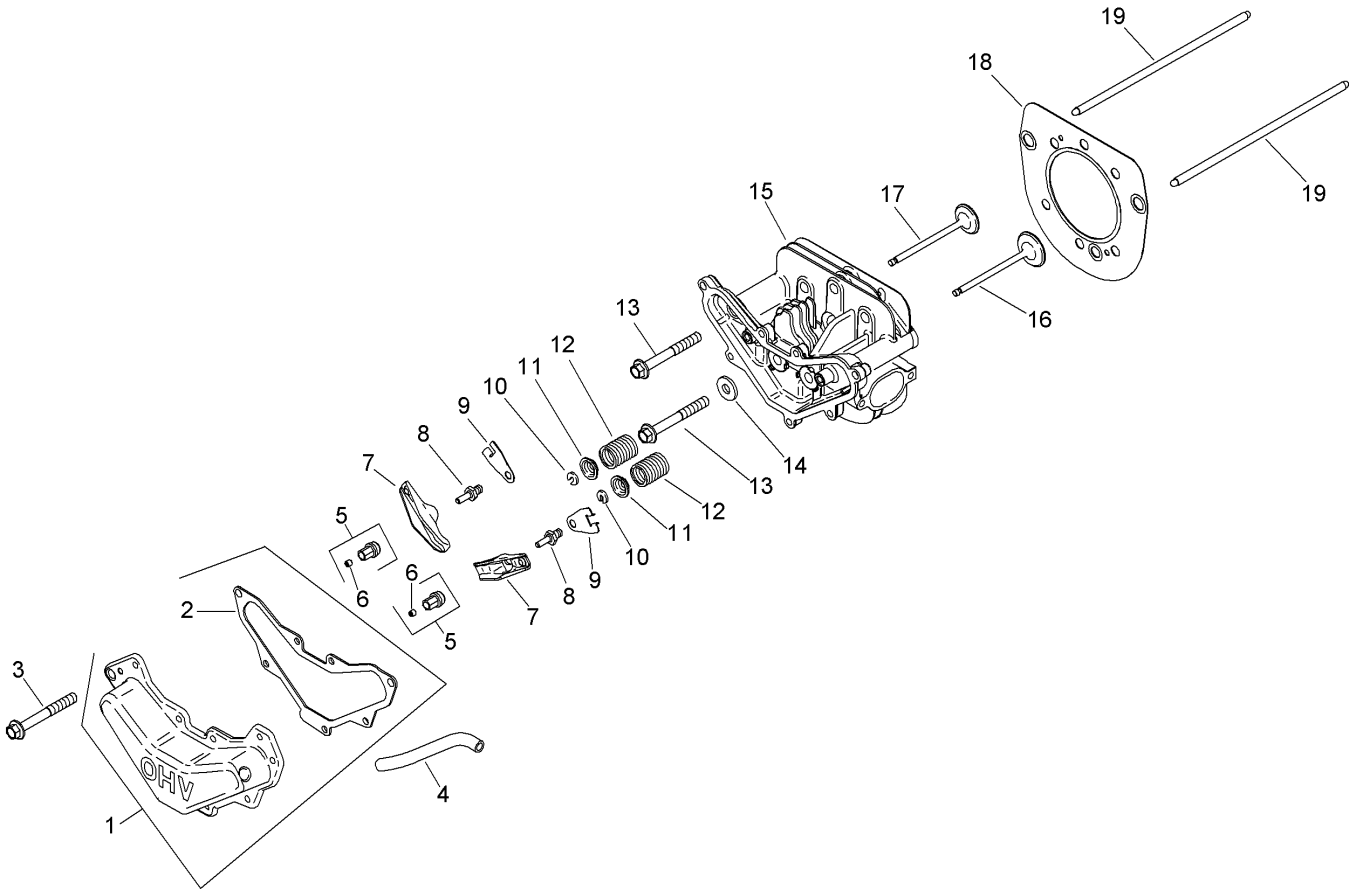

Head, Valve and Breather Assembly
Kohler SV610S-0022

Ref	Part No.	Qty.	Description
❸1	20 096 07-S	1	Valve Cover Kit
❸2	20 041 13-S	1	Gasket-Cover, Valve
❸3	M-645020-S	7	Screw-Flange, Hex (M6X1.0X20)
❸4	20 326 20-S	1	Hose-Breather
❸5	20 599 02-S	2	Pivot-Arm, Rocker
❸6	20 086 04-S	2	Screw-Set
❸7	20 186 01-S	2	Arm-Rocker
❸8	20 086 03-S	2	Stud-Rocker
❸9	20 146 03-S	2	Plate-Guide, Push Rod
❸10	20 062 01-S	2	Lock-Retainer
❸11	20 173 01-S	2	Cap-Spring, Valve
❸12	20 089 03-S	2	Spring-Valve
❸13	20 086 02-S	6	Screw-Flange, Hex (M10X1.5X37)
❸14	12 468 05-S	1	Washer-Flat (1/2)
❸15	20 318 07-S	1	Cylinder Head ASM
❸16	20 016 01-S	1	Valve-Exhaust
❸17	20 017 01-S	1	Valve-Intake
❸18	20 841 01-S	1	Cylinder Head Gasket Kit
❸19	20 411 04-S	2	Rod-Push

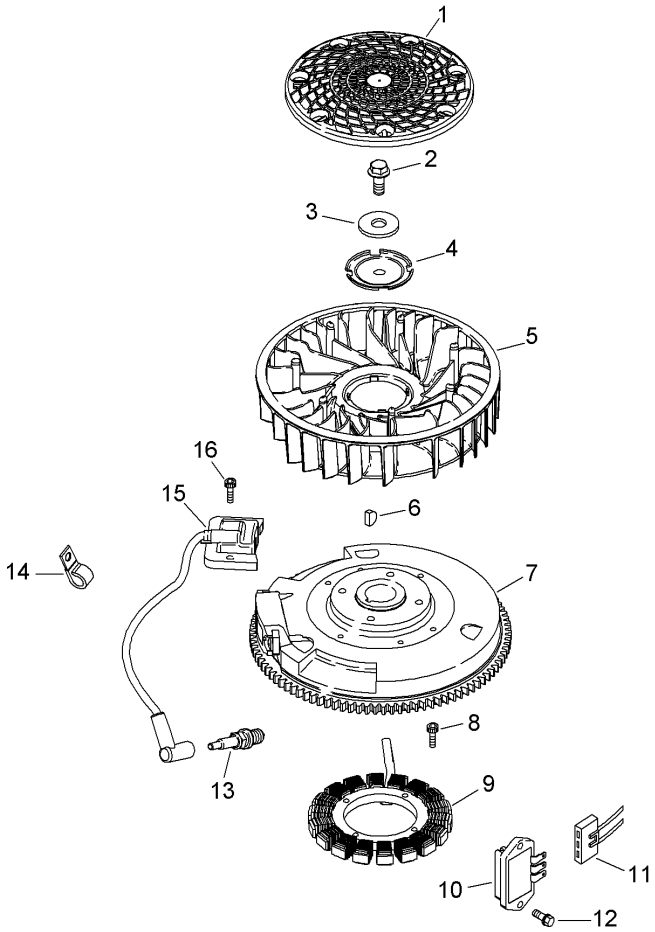

Ignition and Electrical Assembly
Kohler SV610S-0022

Ref	Part No.	Qty.	Description
❸1	20 162 02-S	1	Screen-Grass
❸2	25 086 125-S	1	Screw-Flange, Hex
❸3	25 468 09-S	1	Washer-Flat
❸4	20 146 05-S	1	Plate-Mounting, Fan
❸5	20 157 01-S	1	Fan
❸6	X-42-15-S	1	Key (.19 X .62)
❸7	20 025 35-S	1	Flywheel ASM
❸8	20 086 22-S	2	Screw-Drive, Trx HD
❸9	237878-S	1	Stator Kit (15 Amp)
❸10	41 403 10-S	1	Rectifier-Regulator
❸11	236602-S	1	Connector (3 Contact)
❸12	M-545020-S	2	Screw-HHFTF (M5X0.8X20)
❸13	25 132 14-S	1	Spark Plug (R F I)
❸14	20 154 04-S	2	Clip-Cable
❸15	20 584 03-S	1	Module-Ignition
❸16	M-561025-S	2	Screw-Socket, Hex (M5X0.8X25)
❶❸	20 176 07-S	1	Harness-Wiring
❶❸	25 452 01-S	2	Terminal

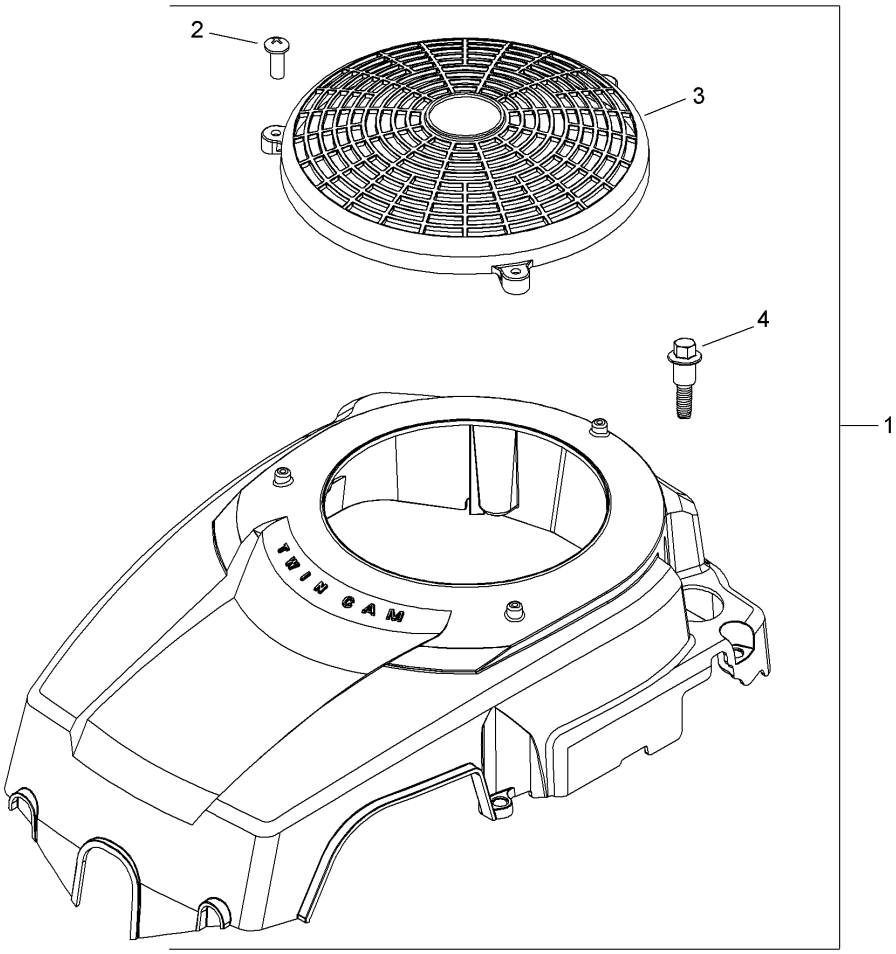

Blower Housing and Baffle Assembly
Kohler SV610S-0022

Ref	Part No.	Qty.	Description
❸1	20 755 11-S	1	Blower Housing And Guard Kit
❸2	24 086 41-S	3	Screw-Phl HD (11-16X1/2)
❸3	20 314 06-S	1	Guard-Fixed
❸4	20 086 06-S	4	Bolt-Shoulder (M6X1X26)
❶❸	20 113 29-S	1	Label-Round, Kohler
❶❸	41 037 10-S	1	Nameplate-Service

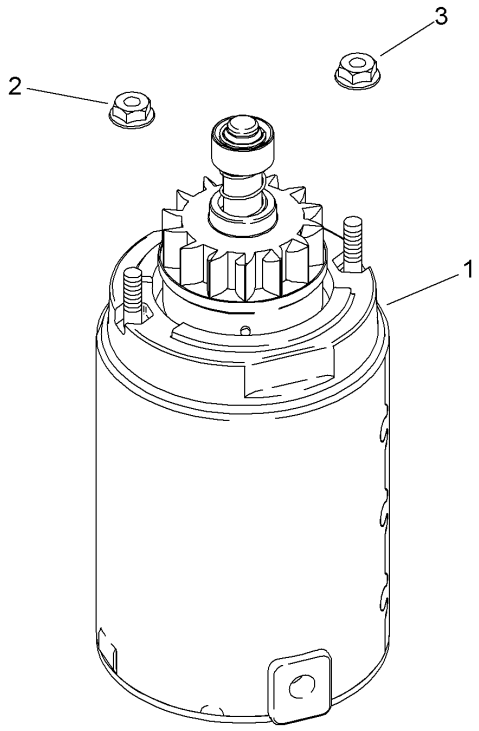

Starting System Assembly
Kohler SV610S-0022

Ref	Part No.	Qty.	Description
❸1	20 098 05-S	1	Starter ASM
❸2	25 100 31-S	2	Nut-Flange, Hex Serrated (10-24)
❸3	12 100 07-S	1	Nut-Flange, Hex (1/4-20)
❶❸	12 221 02-S	1	Brush Kit
❶❸	20 211 02-S	1	Bolt-Thru
❶❸	20 227 01-S	1	Cap-End, Drive (J E)
❶❸	20 755 12-S	1	Drive Kit (J E)

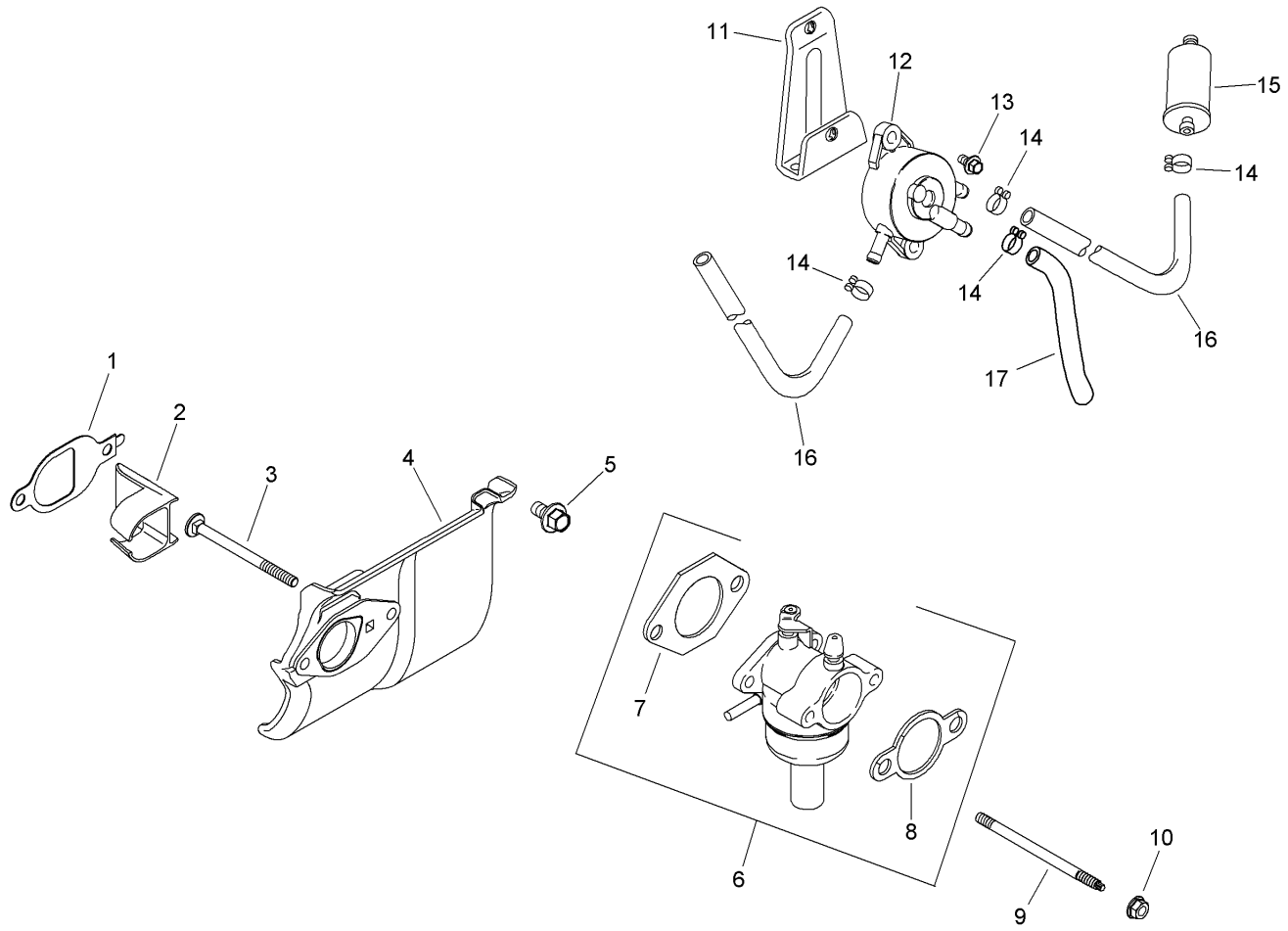

Fuel System Assembly
Kohler SV610S-0022

Ref	Part No.	Qty.	Description
❸1	20 041 18-S	1	Gasket-Deflector, Heat
❸2	20 332 01-S	1	Insert-Port, Intake
❸3	20 072 07-S	1	Stud-Carburetor
❸4	20 265 07-S	1	Deflector-Heat
❸5	M-651020-S	1	Screw-Flange, Hex (M6X1.0X20)
❸6	20 853 14-S	1	Carburetor ASM (Includes Gaskets)
❸7	12 041 01-S	1	Gasket-Carburetor
❸8	12 041 02-S	1	Gasket-Base, Air Cleaner
❸9	20 072 05-S	2	Stud-Mounting, Carburetor (M6X1.0X100)
❸10	M-641060-S	2	Nut-Hex, Flange (M6X1.0)
❸11	20 126 02-S	1	Bracket-Mounting, Fuel Pump
❸12	24 393 16-S	1	Pump-Pulse, Fuel
❸13	M-545010-S	2	Screw-HHFTF (M5X0.8X10)
❸14	25 237 14-S	4	Clamp-Hose
❸15	25 050 22-S	1	Filter-Fuel
❸16	25 111 34-S	2	Line-Fuel (24 Inch, Cut to needed Length)
❸17	52 353 20-S	1	Line-Fuel (10 Inch)
❶❸	M-645016-S	2	Screw-HHFTF (M6X1.0X16)
❶❸	25 454 05-S	1	Tie
❶❸	X-22-11-S	1	Washer-Lock, Internal Tooth (1/4)
❶❸	25 431 02-S	1	Sleeve-Abrasion, Anti
❶❸	12 755 110-S	1	Choke Shaft Kit

Ref	Part No.	Qty.	Description
❶❸	12 757 02-S	1	Float Repair Kit
❶❸	12 757 03-S	1	Carburetor Repair Kit
❶❸	12 757 33-S	1	Solenoid Repair Kit
❶❸	12 757 37-S	1	Bowl Replacement Repair Kit
❶❸	20 755 06-S	1	High Altitude Kit (5, 000 Ft)
❶❸	20 755 07-S	1	High Altitude Kit (10, 000 Ft)

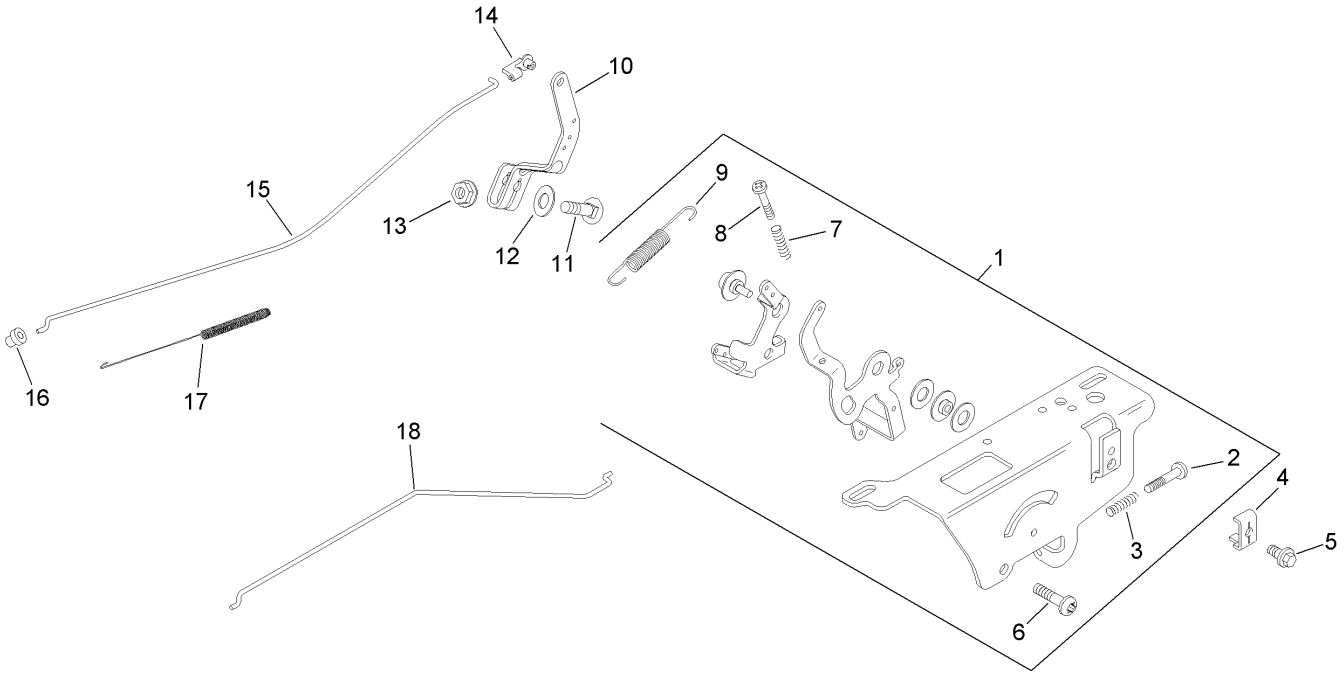

Engine Control Assembly
Kohler SV610S-0022

Ref	Part No.	Qty.	Description
❸1	20 536 05-S	1	Speed Control ASM
❸2	20 086 10-S	1	Screw-Thread Forming (M4X0.7X25)
❸2	20 086 18-S	1	Screw-Phl Thd Frm (M4X0.7X38)
❸3	12 089 11-S	1	Spring-Control, Speed
❸3	20 089 12-S	1	Spring-Control, Speed (Long)
❸4	12 237 01-S	1	Clamp-Cable
❸5	M-545016-S	1	Screw-HHFTF (M5X0.8X16)
❸6	M-664020-S	2	Screw-Socket, 6 Lobed (Thread Forming, M6X1.0X20)
❸7	20 086 10-S	1	Screw-Thread Forming (M4X0.7X25)
❸8	20 086 18-S	1	Screw-Phl Thd Frm (M4X0.7X38)
❸9	20 089 11-S	1	Spring-Governor
❸10	20 090 02-S	1	Lever-Governor
❸11	52 211 04-S	1	Bolt-Square Neck, Round Head (1/4-20X1)
❸12	X-22-11-S	1	Washer-Lock, Internal Tooth (1/4)
❸13	12 100 07-S	1	Nut-Flange, Hex (1/4-20)
❸14	25 158 11-S	1	Bushing-Linkage, Throttle
❸15	20 079 04-S	1	Linkage-Throttle
❸16	25 158 08-S	1	Bushing-Retaining, Linkage
❸17	20 089 10-S	1	Spring-Linkage
❸18	20 079 05-S	1	Linkage-Choke (Single Wire)

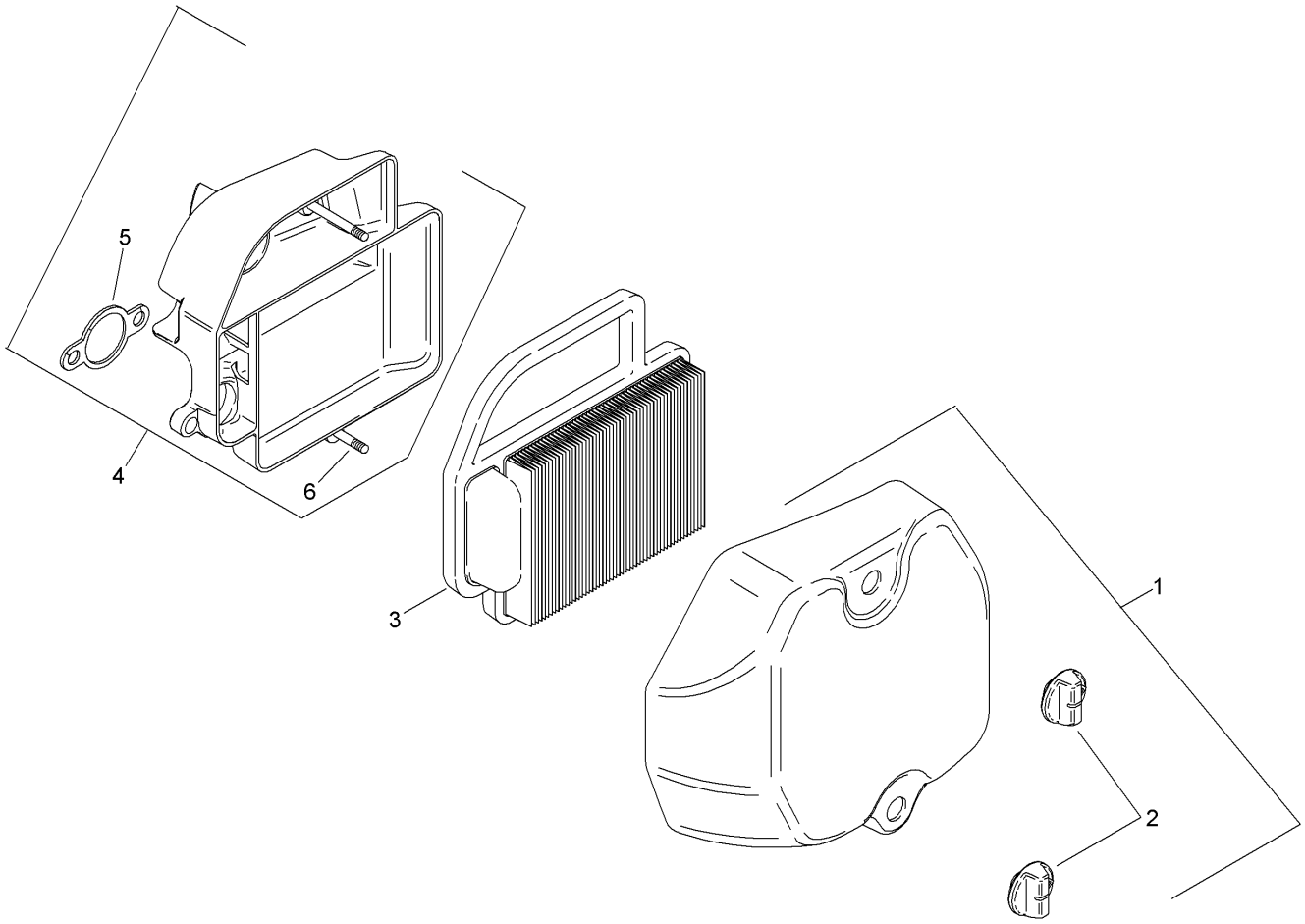

Air Intake and Filtration Assembly
Kohler SV610S-0022

Ref	Part No.	Qty.	Description
❸1	20 096 04-S	1	Cover-Cleaner, Air
❸2	25 341 04-S	2	Knob-Cover
❸3	20 083 02-S	1	Element-Cleaner, Air
❸4	20 094 04-S	1	Air Cleaner Base Kit
❸5	12 041 02-S	1	Gasket-Base, Air Cleaner
❸6	20 072 04-S	2	Stud-Base, Air Cleaner

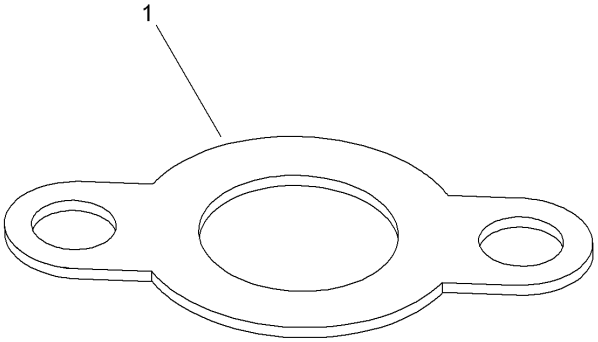

Exhaust Assembly
Kohler SV610S-0022

Ref	Part No.	Qty.	Description
❸1	20 041 12-S	1	Gasket-Exhaust
❶❸	20 755 05-S	1	Gasket Set

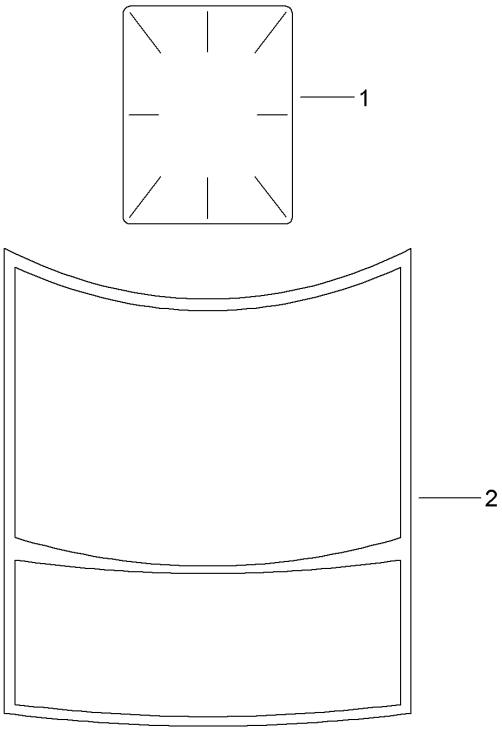

Artwork is representative
Actual labels may differ depending on model and specification number

Decal Assembly
Kohler SV610S-0022

Ref	Part No.	Qty.	Description
❸1	25 113 39-S	1	Decal-Laminate, Clear
❸2	20 113 28-S	1	Decal-21 H P

Attachments and Accessories

For 74391 - TimeCutter Z5000 Riding Mower

Product Name	Model/Part
Hour Meter Kit	112-9763
Deck Ring Kit	114-1608
Armrest Kit	79212
Replacement Blade Kit	79221
Foot Assist Cutting Unit Lift Kit	79313
Engine Cover Kit	79314
Floor Mat Kit	79315
Rear Hitch Kit	79318
42 Inch and 50 Inch Twin Bagger	79324

NOTES

NOTES

NOTES

TORO®