Form No. 3358-954 Rev A

TORO®

Count on it.

Operator's Manual

TimeCutter® Z5020 Riding Mower

Model No. 74399—Serial No. 280000001 and Up

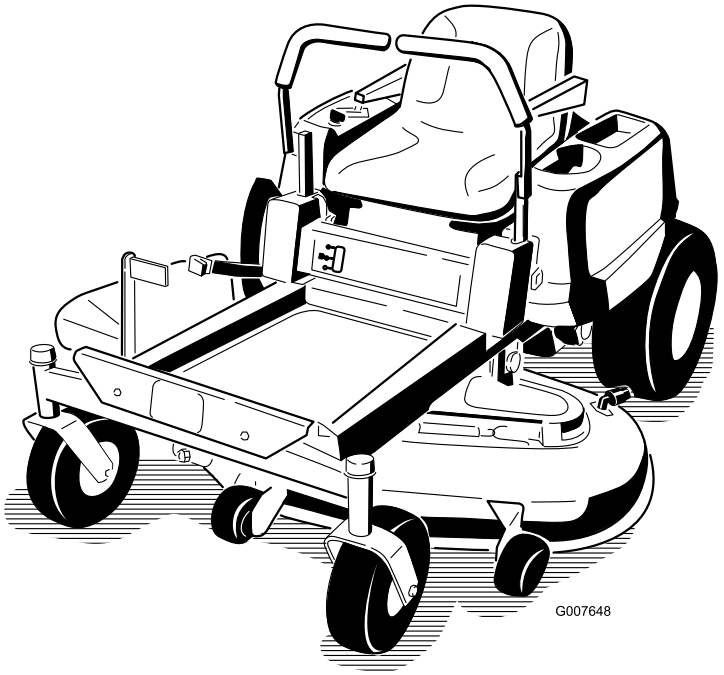

Register at www.Toro.com.

CE

Original Instructions (EN)

Introduction

Read this information carefully to learn how to operate and maintain your product properly and to avoid injury and product damage. You are responsible for operating the product properly and safely.

You may contact Toro directly at www.Toro.com for product and accessory information, help finding a dealer, or to register your product.

Whenever you need service, genuine Toro parts, or additional information, contact an Authorized Service Dealer or Toro Customer Service and have the model and serial numbers of your product ready. Figure 1 identifies the location of the model and serial numbers on the product. Write the numbers in the space provided.

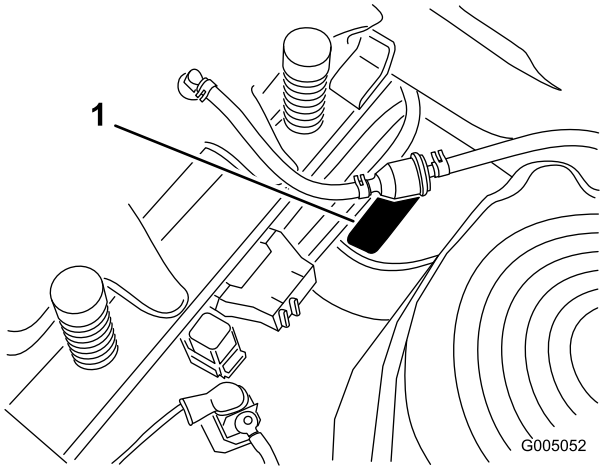

Figure 1
Under the seat

1. Model and serial number plate

Write the product model and serial numbers in the space below:

Model No. _____

Serial No. _____

This manual identifies potential hazards and has safety messages identified by the safety alert symbol (Figure 2), which signals a hazard that may cause serious injury or death if you do not follow the recommended precautions.



Figure 2

1. Safety alert symbol.

This manual uses two other words to highlight information. **Important** calls attention to special mechanical information and **Note** emphasizes general information worthy of special attention.

Contents

Introduction 2
Safety 3
- Safe Operation Practices for Ride-on (riding) Rotary Lawnmower Machines 3
- Safe Operating Practices 3
- Toro Riding Mower Safety 5
- Sound Pressure 5
- Sound Power 5
- Vibration 5
- Slope Chart 6
- Safety and Instructional Decals 7

Product Overview 10
- Controls 11

Operation 12
- Think Safety First 12
- Recommended Fuel 12
- Checking the Engine Oil Level 14
- Starting and Stopping the Engine 14
- Operating the Blades 15
- Stopping the Engine 16
- The Safety Interlock System 16
- Driving Forward or Backward 17
- Stopping the Machine 17
- Adjusting the Height of Cut 18
- Positioning the Seat 18
- Adjusting the Motion Control Levers 18
- Pushing the Machine by Hand 19
- Side Discharge 19
- Converting to Side Discharge 20
- Operating Tips 21

Maintenance 23
- Recommended Maintenance Schedule(s) 23
- Premaintenance Procedures 24
  - Raising the Seat 24
  - Accessing the Battery 24
- Lubrication 24
  - Greasing the Bearings 24
- Engine Maintenance 25
  - Servicing the Air Cleaner 25

© 2007—The Toro® Company
8111 Lyndale Avenue South
Bloomington, MN 55420

Contact us at www.Toro.com.
Printed in the USA.
All Rights Reserved

Servicing the Engine Oil 26
Servicing the Spark Plug 28
Cleaning the Blower Housing 29
Fuel System Maintenance 29
Replacing the Fuel Filter 29
Electrical System Maintenance 30
Charging the Battery 30
Servicing the Fuses 31
Drive System Maintenance 32
Checking the Tire Pressure 32
Mower Maintenance 33
Servicing the Cutting Blades 33
Leveling the Mower from Side-to-Side 34
Adjusting the Front-to-Rear Blade Slope 35
Removing the Mower 36
Mower Belt Maintenance 37
Installing the Mower 37
Replacing the Grass Deflector 38
Cleaning 39
Washing the Underside of the Mower 39
Storage 40
Cleaning and Storage 40
Troubleshooting 41
Schematics 43

Safety

Safe Operation Practices for Ride-on (riding) Rotary Lawnmower Machines

This machine meets or exceeds European Standards in effect at the time of production. However, improper use or maintenance by the operator or owner can result in injury. To reduce the potential for injury, comply with these safety instructions and always pay attention to the safety alert symbol, which means CAUTION, WARNING, or DANGER -"personal safety instruction." Failure to comply with the instruction may result in personal injury or death.

Safe Operating Practices

The following instructions are from the EN standard EN 836:1997.

This product is capable of amputating hands and feet and throwing objects. Always follow all safety instructions to avoid serious injury or death.

Training

- Read the instructions carefully. Be familiar with the controls and the proper use of the equipment.
- Never allow children or people unfamiliar with these instructions to use the lawnmower. Local regulations can restrict the age of the operator.
- Never mow while people, especially children, or pets are nearby.
- Keep in mind that the operator or user is responsible for accidents or hazards occurring to other people or their property.
- Do not carry passengers.
- All drivers should seek and obtain professional and practical instruction. Such instruction should emphasize:
  - the need for care and concentration when working with ride-on machines;
  - control of a ride-on machine sliding on a slope will not be regained by the application of the brake. The main reasons for loss of control are:
    - ◊ insufficient wheel grip;
    - ◊ being driven too fast;
    - ◊ inadequate braking;
    - ◊ the type of machine is unsuitable for its task;

- ◊ lack of awareness of the effect of ground conditions, especially slopes;
- ◊ incorrect hitching and load distribution.

Preparation

- While mowing, always wear substantial footwear and long trousers. Do not operate the equipment when barefoot or wearing open sandals.
- Thoroughly inspect the area where the equipment is to be used and remove all objects which may be thrown by the machine.
- Warning-Fuel is highly flammable.
  - Store fuel in containers specifically designed for this purpose.
  - Refuel outdoors only and do not smoke while refuelling.
  - Add fuel before starting the engine. Never remove the cap of the fuel tank or add fuel while the engine is running or when the engine is hot.
  - If fuel is spilled, do not attempt to start the engine but move the machine away from the area of spillage and avoid creating any source of ignition until fuel vapors have dissipated.
  - Replace all fuel tanks and container caps securely.
- Replace faulty silencers.
- Before using, always visually inspect to see that the blades, blade bolts and cutter assembly are not worn or damaged. Replace worn or damaged blades and bolts in sets to preserve balance.
- On multi-bladed machines, take care as rotating one blade can cause other blades to rotate.

Operation

- Be alert, slow down and use caution when making turns. Look behind and to the side before changing directions.
- Do not operate the engine in a confined space where dangerous carbon monoxide fumes can collect.
- Mow only in daylight or in good artificial light.
- Before attempting to start the engine, disengage all blade attachment clutches and shift into neutral.
- Do not use on slopes of more than 15 degrees.
- Remember there is no such thing as a safe slope. Travel on grass slopes requires particular care. To guard against overturning:
  - do not stop or start suddenly when going up or downhill;
  - use low speeds on slopes and during tight turns;
  - stay alert for humps and hollows and other hidden hazards;
- Use care when pulling loads.
  - Use only approved drawbar hitch points.
  - Limit loads to those you can safely control.
  - Do not turn sharply. Use care when reversing.
- Watch out for traffic when crossing or near roadways.
- Stop the blades rotating before crossing surfaces other than grass.
- When using any attachments, never direct discharge of material toward bystanders nor allow anyone near the machine while in operation.
- Never operate the machine with damaged guards or without safety protective devices in place.
- Do not change the engine governor settings or overspeed the engine. Operating the engine at excessive speed can increase the hazard of personal injury.
- Before leaving the operator's position:
  - disengage the power take-off and lower the attachments;
  - change into neutral and set the parking brake;
  - stop the engine and remove the key.
- Disengage drive to attachments, stop the engine, and disconnect the spark plug wire(s) or remove the ignition key
  - before clearing blockages or unclogging chute;
  - before checking, cleaning or working on the lawnmower;
  - after striking a foreign object. Inspect the lawnmower for damage and make repairs before restarting and operating the equipment;
  - if the machine starts to vibrate abnormally (check immediately).
- Disengage drive to attachments when transporting or not in use.
- Stop the engine and disengage drive to attachment
  - before refuelling;
  - before removing the grass catcher;
  - before making height adjustment unless adjustment can be made from the operator's position.
- Reduce the throttle setting during engine run-out and, if the engine is provided with a shut-off valve, turn the fuel off at the conclusion of mowing.

Maintenance and Storage

- Keep all nuts, bolts and screws tight to be sure the equipment is in safe working condition.
- Never store the equipment with fuel in the tank inside a building where fumes can reach an open flame or spark.
- Allow the engine to cool before storing in any enclosure.
- To reduce the fire hazard, keep the engine, silencer, battery compartment and fuel storage area free of grass, leaves, or excessive grease.
- Check the grass catcher frequently for wear or deterioration.
- Replace worn or damaged parts for safety.
- If the fuel tank has to be drained, this should be done outdoors.
- When machine is to be parked, stored or left unattended, lower the cutting means.

Toro Riding Mower Safety

The following list contains safety information specific to Toro products or other safety information that you must know that is not included in the CEN standard.

- Engine exhaust contains carbon monoxide, which is an odorless, deadly poison that can kill you. Do not run engine indoors or in an enclosed area.
- Keep hands, feet, hair and loose clothing away from attachment discharge area, underside of mower and any moving parts while engine is running.
- Do not touch equipment or attachment parts which may be hot from operation. Allow to cool before attempting to maintain, adjust, or service.
- Battery acid is poisonous and can cause burns. Avoid contact with skin, eyes and clothing. Protect your face, eyes, and clothing when working with a battery.
- Battery gases can explode. Keep cigarettes, sparks, and flames away from battery.
- Use only genuine Toro replacement parts to ensure that original standards are maintained.
- Use only Toro-approved attachments.

Slope Operation

- Do not mow slopes greater than 15 degrees.
- Do not mow near drop-offs, ditches, steep banks, or water. Wheels dropping over edges can cause rollovers, which may result in serious injury, death, or drowning.
- Do not mow slopes when grass is wet. Slippery conditions reduce traction and could cause sliding and loss of control.
- Do not make sudden turns or rapid speed changes.
- Use a walk behind mower and/or a hand trimmer near drop-offs, ditches, steep banks, or water.
- Reduce speed and use extreme caution on slopes.
- Remove or mark obstacles such as rocks, tree limbs, etc. from mowing area. Tall grass can hide obstacles.
- Watch for ditches, holes, rocks dips, and rises that change the operating angle, as rough terrain could overturn the machine.
- Avoid sudden starts when mowing uphill because the mower may tip backwards.
- Be aware that loss of traction may occur going downhill. Weight transfer to the front wheels may cause drive wheels to slip and cause loss of braking and steering.
- Always avoid sudden starting or stopping on a slope. If tires lose traction, disengage the blades and proceed slowly off the slope.
- Follow the manufacturer's recommendations for wheel weights or counterweights to improve stability.
- Use extreme care with grass catchers or other attachments. These can change the stability of the machine and cause loss of control.

Sound Pressure

This unit has a maximum sound pressure level at the operator's ear of 92 dBA, based on measurements of identical machines per EN 836 and ISO 11201.

Sound Power

This unit has a guaranteed sound power level of 105 dBA, based on measurements of identical machines per ISO 11094.

Vibration

This unit does not exceed a hand/arm vibration level of 4.08 m/s2, based on measurements of identical machines per EN 836 and EN 1033.

This unit does not exceed a whole body vibration level of 0.73 m/s2, based on measurements of identical machines per EN 836 and EN 1032.

Slope Chart

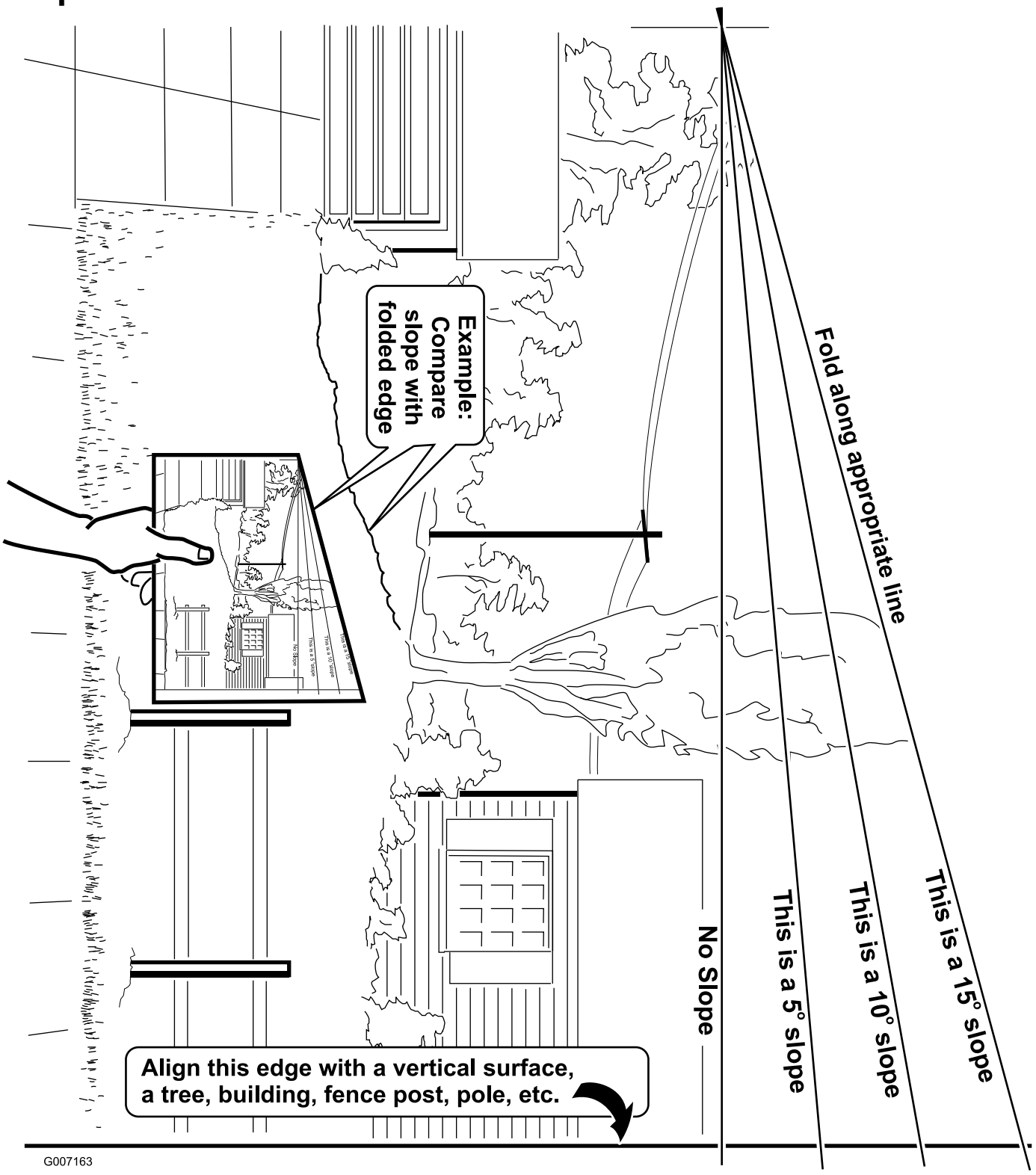
Example: Compare slope with folded edge
Fold along appropriate line
This is a 15° slope
This is a 10° slope
This is a 5° slope
No Slope
Align this edge with a vertical surface, a tree, building, fence post, pole, etc.
G007163

Safety and Instructional Decals

Safety decals and instructions are easily visible to the operator and are located near any area of potential danger. Replace any decal that is damaged or lost.

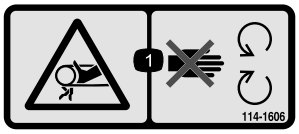

114-1606

1. Entanglement hazard, belt—keep all guards in place.

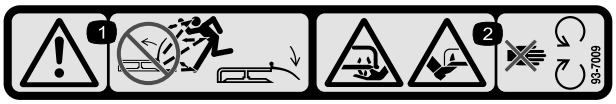

93-7009

1. Warning—don't operate the mower with the deflector up or removed; keep the deflector in place.
2. Cutting/dismemberment hazard of hand or foot, mower blade—stay away from moving parts.

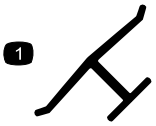

Manufacturer's Mark

1. Indicates the blade is identified as a part from the original machine manufacturer.

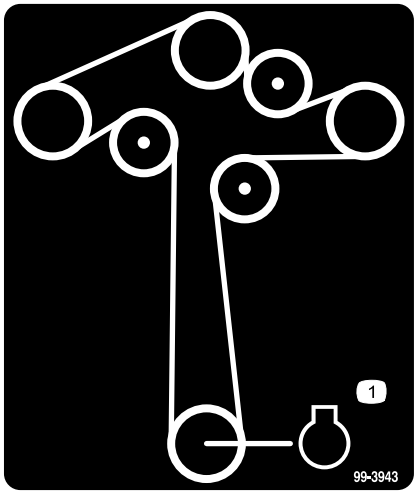

99-3943

1. Engine

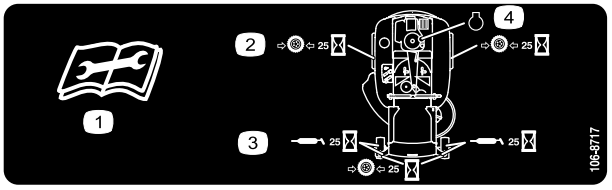

106-8717

1. Read the instructions before servicing or performing maintenance.
2. Check tire pressure every 25 operating hours.
3. Grease every 25 operating hours.
4. Engine

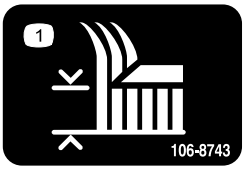

106-8743

1. Height of cut

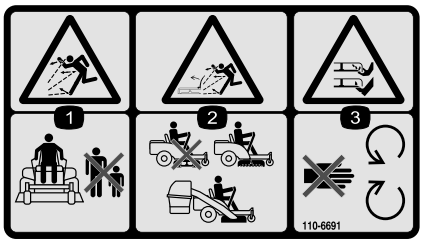

110-6691

1. Thrown object hazard—keep bystanders a safe distance from the machine.
2. Thrown object hazard, mower—do not operate the without deflector or grass collection system in place.
3. Cutting/dismemberment of hand or foot—stay away from moving parts.

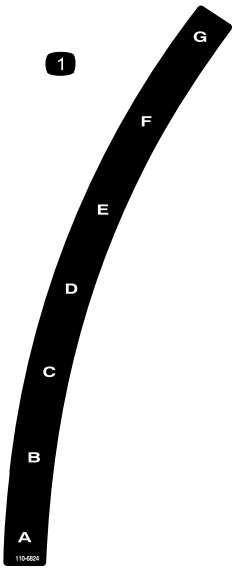

110-6824

1. Height-of-cut

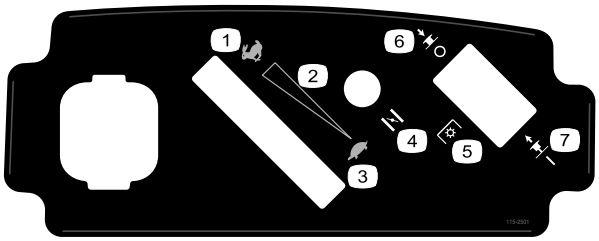

115-2501

1. Fast
2. Continuous variable setting
3. Slow
4. Choke
5. Power take-off (PTO), Blade control switch on some models
6. Blade control switch—Off
7. Blade control switch—On

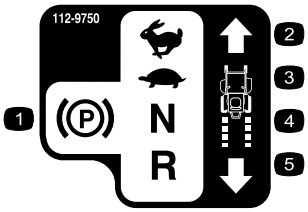

112-9750

1. Parking position
2. Fast
3. Slow
4. Neutral
5. Reverse

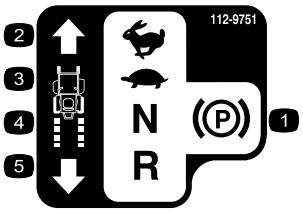

112-9751

1. Parking position
2. Fast
3. Slow
4. Neutral
5. Reverse

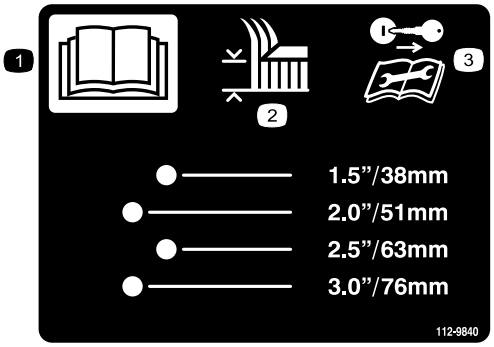

112-9840

1. Read the *Operator's Manual*.
2. Height of cut
3. Remove the ignition key and read the instructions before servicing or performing maintenance.

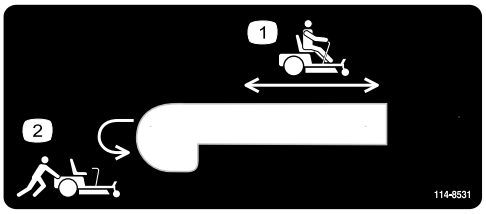

114-8531

1. Bypass lever position for operating the machine
2. Bypass lever position for pushing the machine

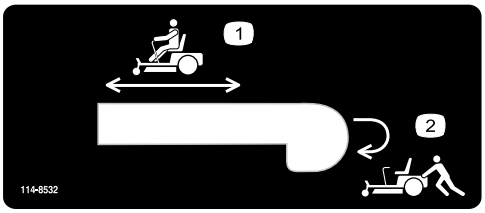

114-8532

1. Bypass lever position for operating the machine
2. Bypass lever position for pushing the machine



Battery Symbols

Some or all of these symbols are on your battery

1. Explosion hazard
2. No fire, open flame, or smoking.
3. Caustic liquid/chemical burn hazard
4. Wear eye protection
5. Read the *Operator's Manual.*
6. Keep bystanders a safe distance from the battery.
7. Wear eye protection; explosive gases can cause blindness and other injuries
8. Battery acid can cause blindness or severe burns.
9. Flush eyes immediately with water and get medical help fast.
10. Contains lead; do not discard.

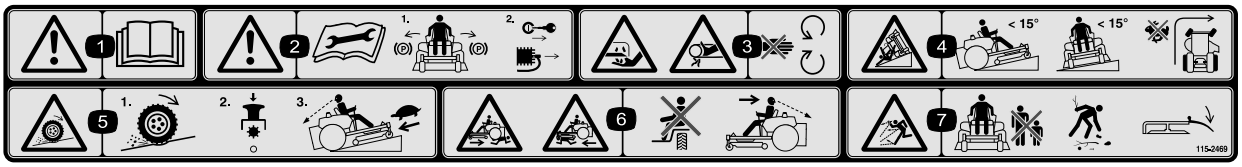

115-2469

1. Warning—read the *Operator's Manual.*
2. Warning—read the instructions before servicing or performing maintenance; move the motion control levers to the park (brake) position, remove the ignition key and disconnect the spark plug wire.
3. Cutting/dismemberment hazard, mower blade; entanglement hazard, belt—do not open or remove safety shields while engine is running.
4. Tipping hazard—do not mow slopes greater than 15 degrees, avoid sudden and sharp turns while on slopes.
5. Loss of traction/control hazard, slopes—loss of traction/control on a slope, disengage the blade control switch (PTO), proceed off the slope slowly.
6. Crushing/dismemberment hazard of bystanders, reversing; crushing/dismemberment hazard of bystanders—do not carry passengers, look behind and down when reversing.
7. Thrown object hazard—keep bystanders a safe distance from the machine, pick up debris before operating, keep deflector in place.

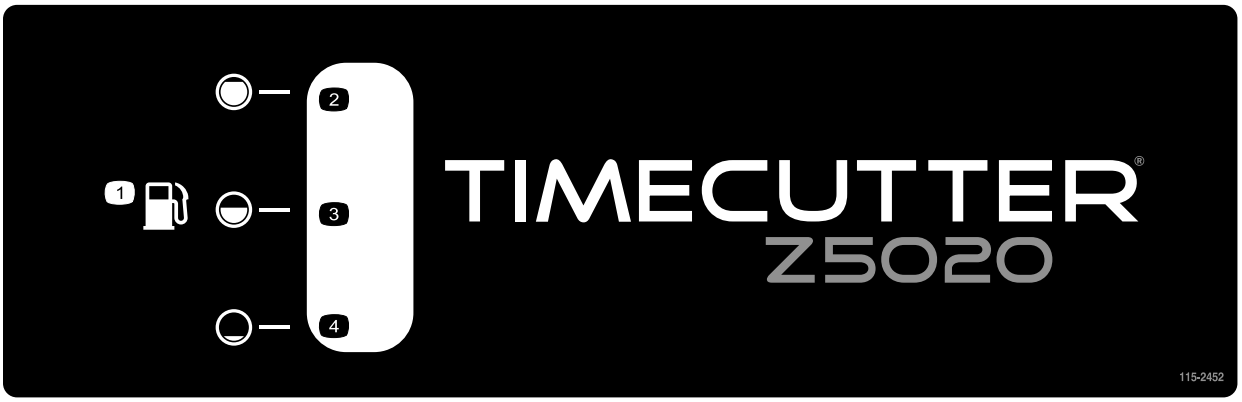

115-2452

1. Fuel gauge
2. Full
3. Half
4. Empty

Product Overview

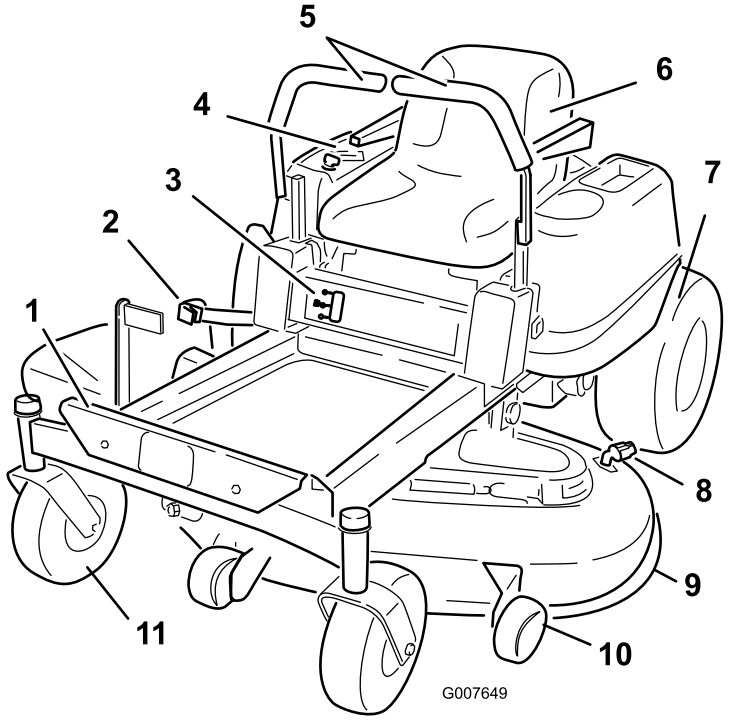

Figure 3

1. Footrest
2. Height of cut lever
3. Fuel gauge
4. Control panel
5. Motion control levers
6. Operator seat
7. Rear drive wheel
8. Washout fitting
9. Mower deck
10. Anti-scalp roller
11. Front caster wheel

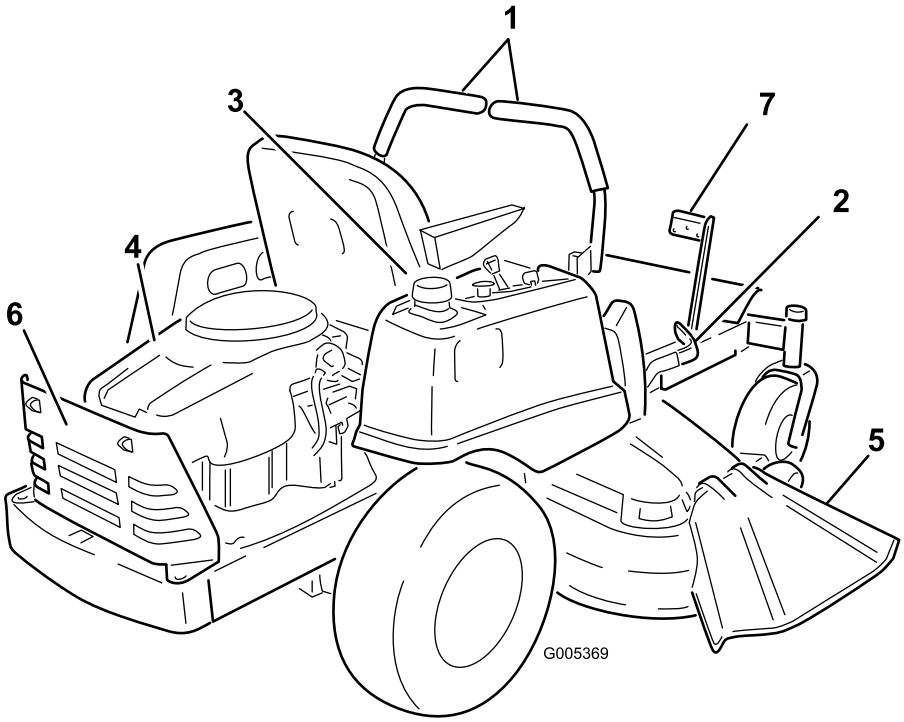

Figure 4

1. Motion control levers
2. Height of cut lever
3. Gas tank cap
4. Engine
5. Deflector
6. Engine guard
7. Foot assist pedal

Controls

Become familiar with all of the controls in Figure 3, Figure 4, and Figure 5 before you start the engine and operate the machine.

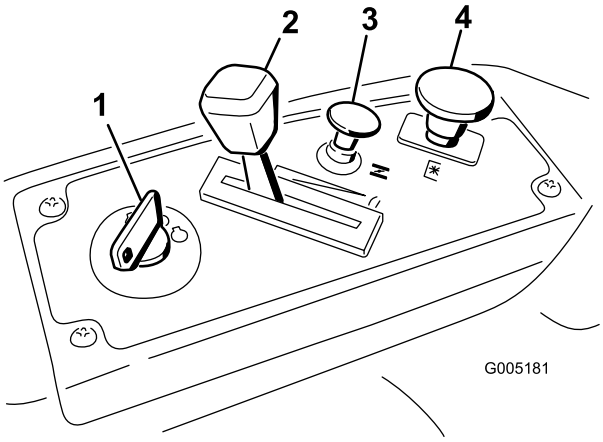

Figure 5
Control Panel

1. Ignition switch
2. Throttle control
3. Choke control
4. Blade control switch (power take-off)

Ignition Switch

The ignition switch has three positions, Off, Run and Start. The key will turn to Start and move back to Run upon release. Turning the key to the Off position will stop the engine; however, always remove the key when leaving the machine to prevent the engine from accidentally starting (Figure 5).

Throttle Control

The throttle controls the engine speed and it has a continuous variable setting from Slow to Fast (Figure 5).

Choke Control

Pull up on the Choke control until it stops to choke the engine (Figure 5). Push down on the Choke control for normal engine operation

Blade Control Switch (Power Take-Off)

The blade control switch, represented by a power take-off (PTO) symbol, engages and disengages power to the mower blades (Figure 5).

Motion Control Levers and Park Position

The motion control levers are speed sensitive controls of independent wheel motors. Moving a lever forward or backward turns the wheel on the same side forward or in reverse; wheel speed is proportional to the amount the lever is moved. Move the control levers outward from the center to the park position and exit the machine (Figure 15). Always position the motion control levers into the park position when you stop the machine or leave it unattended.

Fuel Gauge

The fuel window located below the operator position can be used to verify the level of gasoline in the tank (Figure 6).

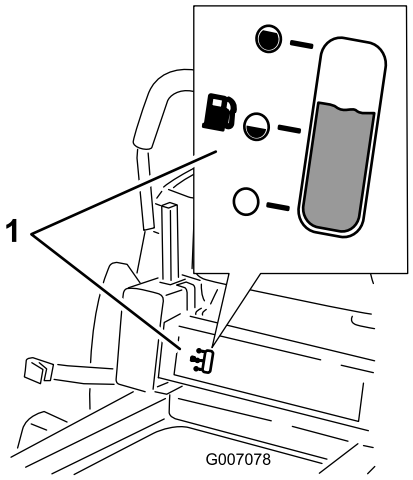

Figure 6

1. Fuel gauge window

Height-of-Cut Lever

The height of cut lever allows the operator to lower and raise the deck from the seated position. When the lever is moved up, toward the operator the deck is raised from the ground and when moved down, away from the operator it is lowered toward the ground. Only adjust the height of cut while machine is not moving (Figure 17).

Foot Assist Pedal

The foot assist pedal allows the operator to support the weight of the deck with their leg during adjusting the deck height via the height-of-cut lever.

Operation

Note: Determine the left and right sides of the machine from the normal operating position.

Think Safety First

Please carefully read all of the safety instructions and decals in the safety section. Knowing this information could help you, your family, pets or bystanders avoid injury.

Mowing on wet grass or steep slopes can cause sliding and loss of control.

Wheels dropping over edges can cause rollovers, which may result in serious injury, death or drowning.

A loss of traction is a loss of steering control.

To avoid loss of control and possibility of rollover:

- **Do not mow near drop-offs or near water.**
- **Do not mow slopes greater than 15 degrees.**
- **Reduce speed and use extreme caution on slopes.**
- **When mowing slopes, gradually work from lower to higher areas on the incline.**
- **Avoid sudden turns or rapid speed changes.**
- **Turn up, into an incline when changing directions on slopes. Turning down the slope reduces traction.**
- **Attachments change the handling characteristics of the machine. Use extra caution when using attachments with the machine.**

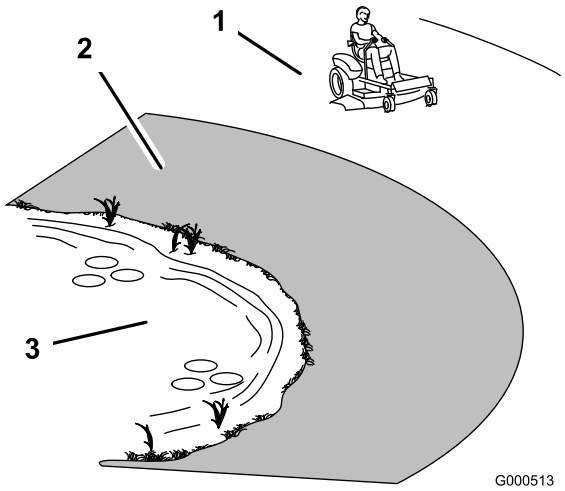

Figure 7

1. Safe Zone-use the TimeCutter here
2. Use walk behind mower and/or hand trimmer near drop-offs and water.
3. Water

Recommended Fuel

Use UNLEADED Regular Gasoline suitable for automotive use (87 pump octane minimum). Leaded regular gasoline may be used if unleaded regular is not available.

Important: Never use methanol, gasoline containing methanol, or gasohol containing more than 10 percent ethanol because the fuel system could be damaged. Do not mix oil with gasoline.

In certain conditions, gasoline is extremely flammable and highly explosive. A fire or explosion from gasoline can burn you and others and can damage property.

- **Fill the fuel tank outdoors, in an open area, when the engine is cold. Wipe up any gasoline that spills.**
- **Never fill the fuel tank inside an enclosed trailer.**
- **Do not fill the fuel tank completely full. Add gasoline to the fuel tank until the body of the tank is full but fuel does not fill the neck of the tank. This empty space in the tank allows gasoline to expand.**
- **Never smoke when handling gasoline, and stay away from an open flame or where gasoline fumes may be ignited by a spark.**
- **Store gasoline in an approved container and keep it out of the reach of children. Never buy more than a 30-day supply of gasoline.**
- **Do not operate without entire exhaust system in place and in proper working condition.**

In certain conditions during fueling, static electricity can be released causing a spark which can ignite the gasoline vapors. A fire or explosion from gasoline can burn you and others and can damage property.

- **Always place gasoline containers on the ground away from your vehicle before filling.**
- **Do not fill gasoline containers inside a vehicle or on a truck or trailer bed because interior carpets or plastic truck bed liners may insulate the container and slow the loss of any static charge.**
- **When practical, remove gas-powered equipment from the truck or trailer and refuel the equipment with its wheels on the ground.**
- **If this is not possible, then refuel such equipment on a truck or trailer from a portable container, rather than from a gasoline dispenser nozzle.**
- **If a gasoline dispenser nozzle must be used, keep the nozzle in contact with the rim of the fuel tank or container opening at all times until fueling is complete.**

Gasoline is harmful or fatal if swallowed. Long-term exposure to vapors can cause serious injury and illness.

- **Avoid prolonged breathing of vapors.**
- **Keep face away from nozzle and gas tank or conditioner opening.**
- **Keep gas away from eyes and skin.**

Using Stabilizer/Conditioner

Use a fuel stabilizer/conditioner in the machine to provide the following benefits:

- Keeps gasoline fresh during storage of 30 days or less. For longer storage it is recommended that the fuel tank be drained.
- Cleans the engine while it runs.
- Eliminates gum-like varnish buildup in the fuel system, which causes hard starting.

Add the correct amount of gas stabilizer/conditioner to the gas.

Note: A fuel stabilizer/conditioner is most effective when mixed with fresh gasoline. To minimize the chance of varnish deposits in the fuel system, use fuel stabilizer at all times.

Gasoline/Alcohol blends

Gasohol (up to 10 percent ethyl alcohol, 90 percent unleaded gasoline by volume) is approved for fuel use by the engine manufacturer. Other gasoline/alcohol blends, such as E85, are not approved.

Gasoline/Ether blends

Methyl Tertiary Butyl Ether (MTBE) and unleaded gasoline blends (up to a maximum of 15 percent MTBE by volume) are approved for fuel use by the engine manufacturer. Other gasoline/ether blends are not approved.

Fuel Gauge

Use the fuel window below the operator to verify the level of gasoline before filling the tank (Figure 8).

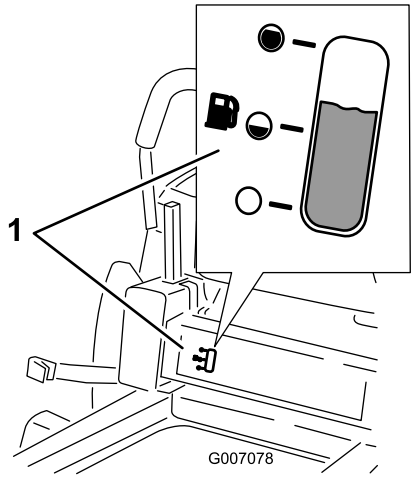

Figure 8

1. Fuel gauge window

Filling the Fuel Tank

1. Shut the engine off and set the motion controls to the park position. Raise the seat so the gas tank is visible while fueling.
2. Clean around the fuel tank cap and remove the cap.
3. Add unleaded regular gasoline until the body of the tank is full but fuel does not fill the neck of the tank (Figure 9). This space in the neck of the tank allows gasoline to expand. Do not fill the fuel tank completely full.
4. Install the fuel tank cap securely. Wipe up any gasoline that may have spilled.

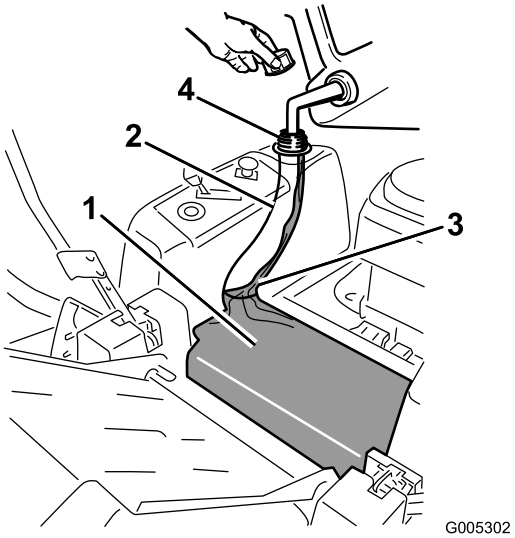

Figure 9

1. Gas tank body
2. Gas tank neck
3. Fill to here, approximately
4. Gas tank opening

Checking the Engine Oil Level

Before you start the engine and use the machine, check the oil level in the engine crankcase; refer to Checking the Oil Level in the Engine Maintenance section.

Starting and Stopping the Engine

Starting the Engine

1. Sit down on the seat and move the motion controls outward to the park position.
2. Disengage the blades by moving the blade control switch to Off (Figure 10).

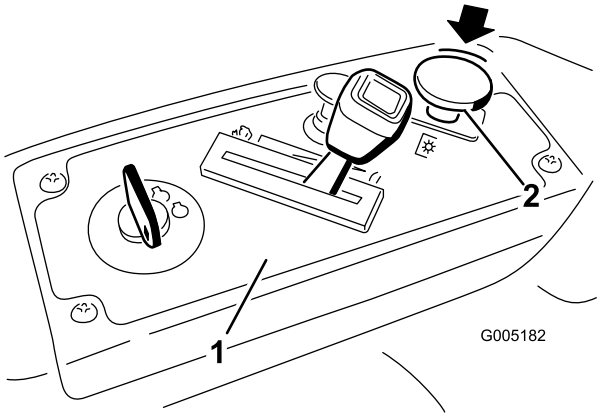

Figure 10

1. Control panel
2. Blade control switch—Off position

3. Pull up on the Choke control before starting a cold engine (Figure 11).

   Note: A warm or hot engine may not require choking.

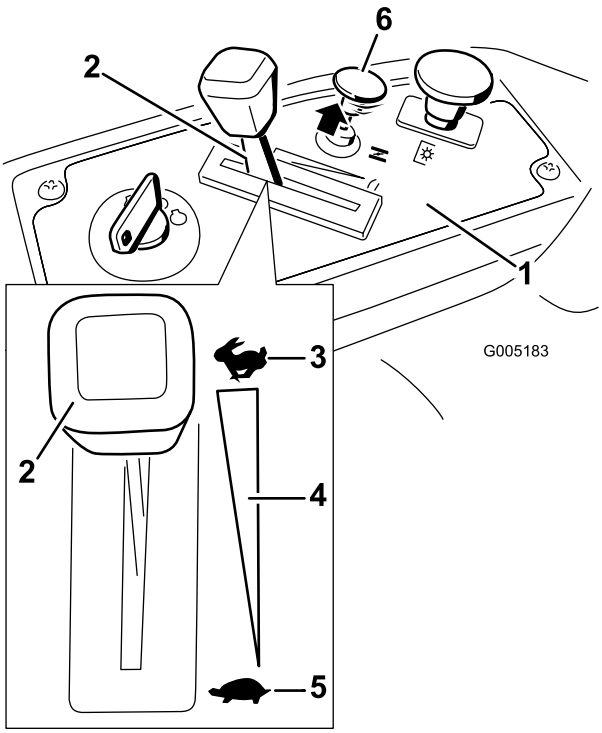

Figure 11

1. Control panel
2. Throttle
3. Fast
4. Continuous variable setting
5. Slow
6. Choke control

4. Turn the ignition key to Start to energize the starter. When the engine starts, release the key (Figure 12).

   Important: Do not engage the starter for more than 10 seconds at a time. If the engine fails to start, allow a 60 second cool-down period between attempts. Failure to follow these instructions can damage the starter motor.

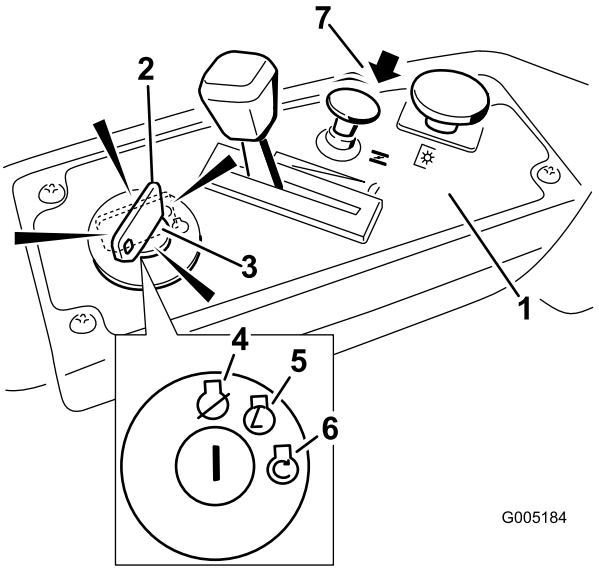

Figure 12

1. Control panel
2. Ignition key—run position
3. Ignition key—start position
4. Off
5. Run
6. Start
7. Choke control

5. After the engine starts, push down on the Choke control (Figure 12). If the engine stalls or hesitates, pull up on the Choke control and let the engine run for a few seconds. Then push down on the Choke control. Repeat this as required.

Operating the Blades

The blade control switch, represented by a power take-off (PTO) symbol, engages and disengages power to the mower blades. This switch controls power to any attachments that draw power from the engine, including the mower deck and cutting blades.

Engaging the Blades

Important: Do not engage the blades when parked in tall grass. Belt or clutch damage can occur.

1. Release pressure on the motion control levers and place the machine in neutral.
2. Move the throttle to the Fast position.

   Note: Always engage the blades with the throttle in the Fast position.

3. Pull up on the blade control switch to move it to the On position and engage the blades (Figure 13).

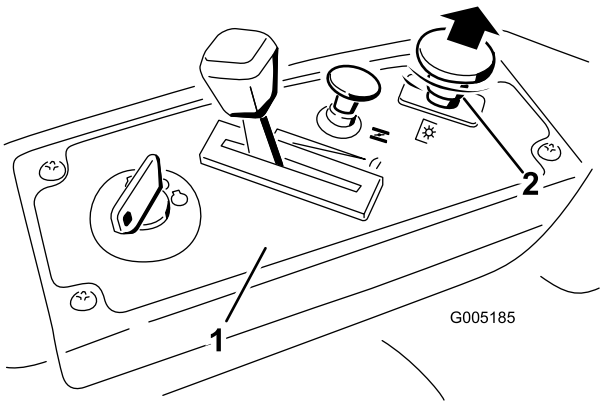

Figure 13

1. Control panel
2. Blade control switch—On position

Disengaging the Blades

Push down on the blade control switch to move it to the Off position and disengage the blades (Figure 14).

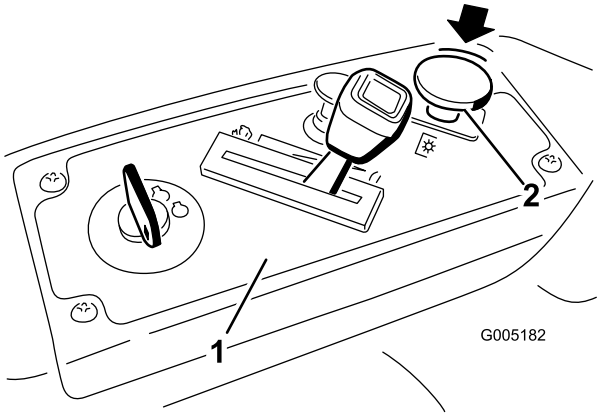

Figure 14

1. Control panel
2. Blade control switch—Off

Stopping the Engine

1. Disengage the blades by moving the blade control switch to Off (Figure 10).
2. Move the throttle lever to between Fast and half throttle (Figure 12).
3. Turn the ignition key to Off (Figure 11).

The Safety Interlock System

If safety interlock switches are disconnected or damaged the machine could operate unexpectedly causing personal injury.

- **Do not tamper with the interlock switches.**
- **Check the operation of the interlock switches daily and replace any damaged switches before operating the machine.**

Understanding the Safety Interlock System

The safety interlock system is designed to prevent the engine from starting unless:

- The blades are disengaged.
- The motion control levers are in the park position.

The safety interlock system also is designed to stop the engine when the control levers are out of the park position and you rise from the seat when the blades are engaged.

Testing the Safety Interlock System

Test the safety interlock system before you use the machine each time. If the safety system does not operate as described below, have an Authorized Service Dealer repair the safety system immediately.

1. While sitting on the seat, with the control levers in park position, and move the blade control switch to On. Try starting the engine; the engine should not crank.
2. While sitting on the seat, move the blade control switch to Off. Move either motion control lever to the center, unlocked position. Try starting the engine; the engine should not crank. Repeat with the other motion control lever.
3. While sitting on the seat, move the blade control switch to Off, and lock the motion control levers in the park position. Start the engine. While the engine is running, engage the blade control switch, and rise slightly from the seat; the engine should stop.
4. While sitting on the seat, move the blade control switch to Off, and lock the motion control levers in the park position. Start the engine. While the engine is running, move the motion control levers to the center, unlocked position, engage the blade control switch, and rise slightly from the seat; the engine should stop.

Driving Forward or Backward

The throttle control regulates the engine speed as measured in rpm (revolutions per minute). Place the throttle control in the Fast position for best performance. Always operate in the full throttle position.

The machine can spin very rapidly. The operator may lose control of the machine and cause personal injury or damage to the machine.

- **Use caution when making turns.**
- **Slow the machine down before making sharp turns.**

Forward

1. Move the levers to the center, unlocked position.
2. To go forward, slowly push the motion control levers forward (Figure 15).

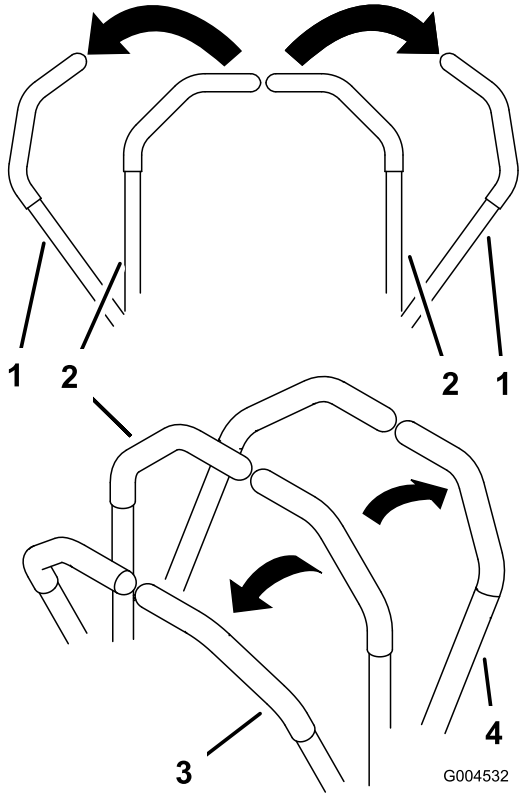

Figure 15

1. Park (brake) position
2. Center unlock position
3. Forward
4. Backward

To go straight, apply equal pressure to both motion control levers (Figure 15).

To turn, release pressure on the motion control lever toward the direction you want to turn (Figure 15).

The farther you move the motion control levers in either direction, the faster the machine will move in that direction.

To stop, pull the motion control levers to neutral.

Backward

1. Move the levers to the center, unlocked position.
2. To go backward, slowly pull the motion control levers rearward (Figure 15).

   To go straight, apply equal pressure to both motion control levers (Figure 15).

   To turn, release the pressure on the motion control lever toward the direction you want to turn (Figure 15).

   To stop, push the motion control levers to neutral.

Stopping the Machine

To stop the machine, move the motion control levers to neutral and outward to the park position, disengage the blade control switch, ensure the throttle is in the fast position, and turn the ignition key to off. Remember to remove the key from the ignition switch.

Children or bystanders may be injured if they move or attempt to operate the mower while it is unattended.

Always remove the ignition key and move the motion control levers outward to the park position when leaving the machine unattended, even if just for a few minutes.

Adjusting the Height of Cut

1. Enter the operator's position. Place a foot on the foot assist pedal and apply pressure.
2. While maintaining pressure on the pedal, pull inward and up on the height-of-cut lever and move it to the desired position.

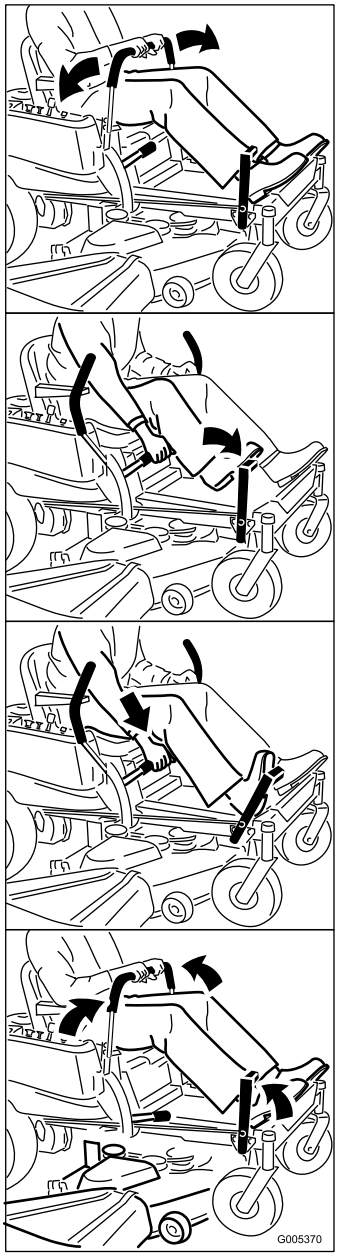

Figure 16

3. Raise the height-of-cut lever to the transport position, cutting height position **G** (also the 4-1/2 inch [115 mm]) (Figure 17).

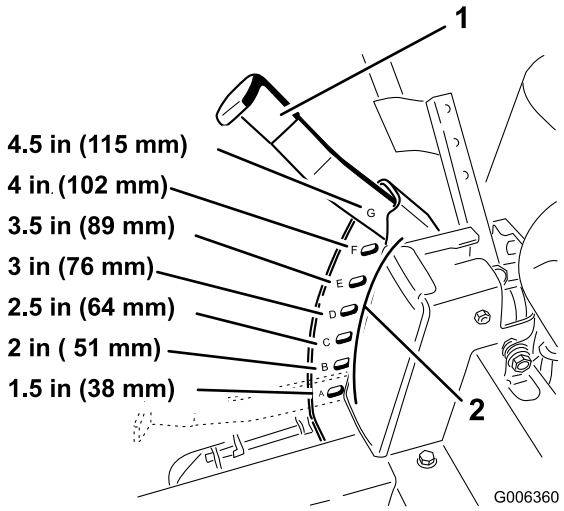

Figure 17

1. Height-of-cut lever
2. Height-of-cut positions

Positioning the Seat

The seat can move forward and backward. Position the seat where you have the best control of the machine and are most comfortable.

1. Raise the seat and loosen the adjustment knob just enough that seat can move (Figure 18).

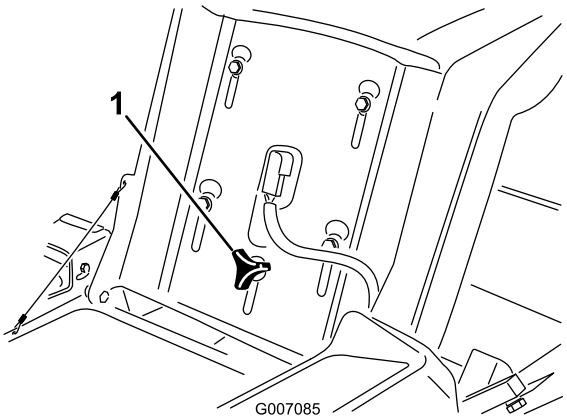

Figure 18

1. Adjustment knob

2. Move the seat to the desired position and tighten the knob.

Adjusting the Motion Control Levers

Adjusting the Height

The motion control levers can be adjusted higher or lower for maximum operator comfort.

1. Remove the 2 bolts holding the control lever to the control arm shaft (Figure 19).
2. Move the control lever to the next set of holes. Secure the lever with the 2 bolts (Figure 19).

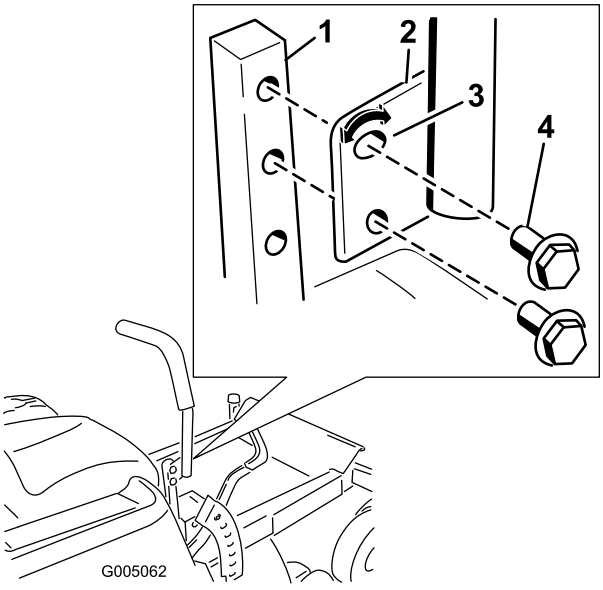

Figure 19

1. Control arm shaft
2. Control lever
3. Slotted, upper hole
4. Bolt

3. Repeat the adjustment for the opposite control lever.

Adjusting the Tilt

The motion control levers can be tilted fore or aft for maximum operator comfort.

1. Loosen the upper bolt holding the control lever to the control arm shaft.
2. Loosen the lower bolt just enough to pivot the control lever fore or aft (Figure 19). Tighten both bolts to secure the control in the new position.
3. Repeat the adjustment for the opposite control lever.

Pushing the Machine by Hand

Important: Always push the machine by hand. Never tow the machine because damage may occur.

To Push the Machine

1. Park the machine on a level surface and disengage the blade control switch.
2. Move the motion control levers outward to park position, stop the engine, remove the key, and wait for all moving parts to stop before leaving the operating position.
3. Locate the bypass levers at the rear of the machine, on the left and right side of the frame.
4. Move the bypass levers rearward and then down to lock them in place as shown in Figure 20 to disengage the wheel motors. Repeat this on each side of the machine.
5. Move the motion control levers inward to the neutral position.

The machine is now able to be pushed by hand.

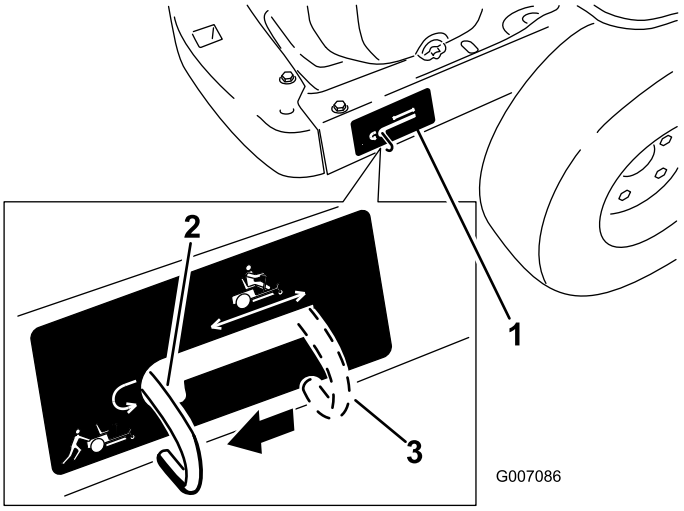

Figure 20

Right side shown

1. Bypass lever location
2. Lever position for pushing the machine
3. Lever position for operating the machine

To Operate the Machine

Move the bypass levers upward and push them forward, to the **middle** of the horizontal slot (Figure 20) to engage the wheel motors.

Side Discharge

The mower has a hinged grass deflector that disperses clippings to the side and down toward the turf.

Without the grass deflector, discharge cover, or complete grass catcher assembly mounted in place, you and others are exposed to blade contact and thrown debris. Contact with rotating mower blade(s) and thrown debris will cause injury or death.

- **Never remove the grass deflector from the mower because the grass deflector routes material down toward the turf. If the grass deflector is ever damaged, replace it immediately.**
- **Never put your hands or feet under the mower.**
- **Never try to clear discharge area or mower blades unless you move the blade control switch to Off and rotate the ignition key to Off. Also remove the key and pull the wire off the spark plug(s).**

Converting to Side Discharge

The mower deck and mower blades shipped with this machine were designed for optimum mulching performance. Side discharge performance can be improved by replacing the mulching blades with standard cutting blades obtained from your local authorized Toro dealer. To maintain optimum mulching performance, always install the mulching blades that are shipped with this unit when changing back to mulching operation.

Removing the Right Baffle for Side Discharge

Note: If the bagger attachment is added the machine, standard blades must be installed for proper bagging function. Contact your local authorized Toro dealer for the proper part number.

1. Park the machine on a level surface and disengage the blade control switch.
2. Move the motion control levers outward to park position, stop the engine, remove the key, and wait for all moving parts to stop before leaving the operating position.
3. Remove the right mower blade. Refer to the Mower Maintenance section.
4. Remove the 2 knobs and curved washers that secure the right baffle to the mower as shown in Figure 21.

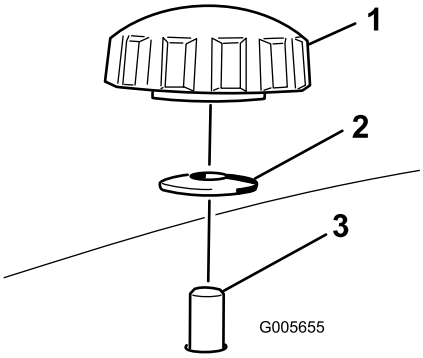

Figure 21

1. Knob
2. Curved washer
3. Baffle stud coming through the mower

5. Remove the right baffle and lower the grass deflector over the discharge opening as shown in Figure 22 and Figure 21.

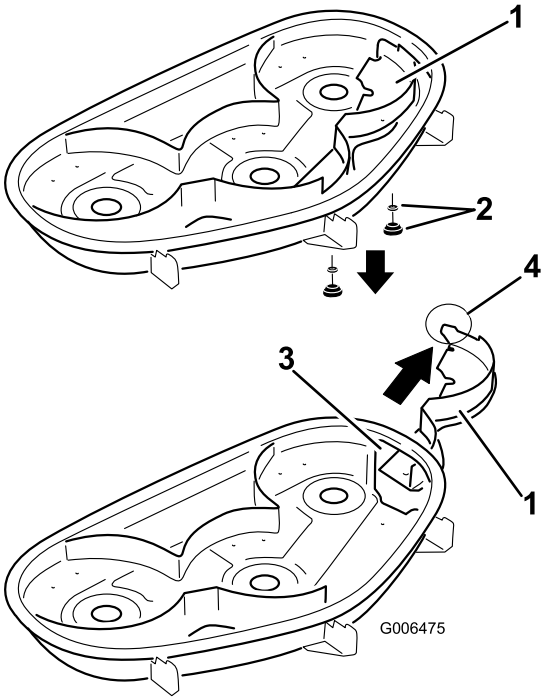

Figure 22

1. Right baffle
2. Curved washer and knob
3. Discharge opening
4. Tab (must remain outside of the mower)

6. Install the fasteners into the holes in the top of the mower to prevent flying debris.

Open holes in the mower expose you and others to thrown debris which can cause severe injury.

- **Never operate the mower without hardware mounted in all holes in the mower housing.**
- **Install the hardware in the mounting holes when you remove the mulching baffle.**

7. Install the right mower blade. Refer to the Mower Maintenance section.
8. Lower the grass deflector over the discharge opening.

   Important: Ensure the mower has a hinged grass deflector that disperses clippings to the side and down toward the turf, while in side discharge mode.

Installing the Right Baffle for Mulching

1. Park the machine on a level surface and disengage the blade control switch.
2. Move the motion control levers outward to park position, stop the engine, remove the key, and wait for all moving parts to stop before leaving the operating position.
3. Remove the right mower blade. Refer to the Mower Maintenance section.
4. Slide the right baffle through the discharge opening and secure it using 2 knobs and curved washers (cupped side facing the mower) as shown in Figure 21 and Figure 22.

   Important: Ensure that the tab on the far right side of the right baffle is outside of the mower and is flush with the mower wall.
5. Install the right mower blade. Refer to the Mower Maintenance section.

Operating Tips

Fast Throttle Setting

For best mowing and maximum air circulation, operate the engine at the Fast position. Air is required to thoroughly cut grass clippings, so do not set the height-of-cut so low as to totally surround the mower by uncut grass. Always try to have one side of the mower free from uncut grass, which allows air to be drawn into the mower.

Cutting a Lawn for the First Time

Cut grass slightly longer than normal to ensure that the cutting height of the mower does not scalp any uneven ground. However, the cutting height used in the past is generally the best one to use. When cutting grass longer than six inches tall, you may want to cut the lawn twice to ensure an acceptable quality of cut.

Cut 1/3 of the Grass Blade

It is best to cut only about 1/3 of the grass blade. Cutting more than that is not recommended unless grass is sparse, or it is late fall when grass grows more slowly.

Mowing Direction

Alternate mowing direction to keep the grass standing straight. This also helps disperse clippings which enhances decomposition and fertilization.

Mow at Correct Intervals

Normally, mow every four days. But remember, grass grows at different rates at different times. So to maintain the same cutting height, which is a good practice, mow more often in early spring. As the grass growth rate slows in mid summer, mow less frequently. If you cannot mow for an extended period, first mow at a high cutting height; then mow again two days later at a lower height setting.

Cutting Speed

To improve cut quality, use a slower ground speed.

Avoid Cutting Too Low

If the cutting width of the mower is wider than the mower you previously used, raise the cutting height to ensure that uneven turf is not cut too short.

Long Grass

If the grass is ever allowed to grow slightly longer than normal, or if it contains a high degree of moisture, raise the cutting height higher than usual and cut the grass at this setting. Then cut the grass again using the lower, normal setting.

When Stopping

If the machine's forward motion must be stopped while mowing, a clump of grass clippings may drop onto your

lawn. To avoid this, move onto a previously cut area with the blades engaged.

Keep the Underside of the Mower Clean

Clean clippings and dirt from the underside of the mower after each use. If grass and dirt build up inside the mower, cutting quality will eventually become unsatisfactory.

Blade Maintenance

Maintain a sharp blade throughout the cutting season because a sharp blade cuts cleanly without tearing or shredding the grass blades. Tearing and shredding turns grass brown at the edges, which slows growth and increases the chance of disease. Check the cutter blades daily for sharpness, and for any wear or damage. File down any nicks and sharpen the blades as necessary. If a blade is damaged or worn, replace it immediately with a genuine Toro replacement blade.

Maintenance

Note: Determine the left and right sides of the machine from the normal operating position.

Recommended Maintenance Schedule(s)

Maintenance Service Interval	Maintenance Procedure
Before each use or daily	• Check the safety interlock system. • Check the air cleaner for dirty, loose or damaged parts. • Check the engine oil level. • Check air intake and cooling areas, clean as necessary. • Check the cutting blades. • Inspect the grass deflector for damage • Clean the mower housing.
Every 25 hours	• Grease all lubrication points. • Check tire pressure. • Check the belts for wear/cracks.
Every 50 hours	• Service the paper element. (more often under extremely dusty, dirty conditions)
Every 100 hours	• Replace the paper element. (more often under extremely dusty, dirty conditions) • Change the engine oil and filter. • Clean the blower housing (more often under extremely dusty, dirty conditions). • Replace the fuel filter.
Every 200 hours	• Check spark plug(s) condition and gap.
Every 500 hours	• Replace the spark plug(s).
Before storage	• Charge the battery and disconnect battery cables. • Perform all maintenance procedures listed above before storage. • Paint any chipped surfaces.

Important: **Refer to your engine operator's manual for additional maintenance procedures.**

If you leave the key in the ignition switch, someone could accidently start the engine and seriously injure you or other bystanders.

Remove the key from the ignition and disconnect the wire from the spark plug before you do any maintenance. Set the wire aside so that it does not accidentally contact the spark plug.

Premaintenance Procedures

Raising the Seat

Make sure the motion control levers are locked in the park position. Lift the seat forward.

The following components can be accessed by raising the seat:

- Serial plate
- Service decal
- Seat adjustment knob
- Fuel filter
- Fuses
- Battery cables

Accessing the Battery

1. Raise the seat.
2. Remove the TORX® head fasteners (T25) securing the left cover to the frame as shown in Figure 23.

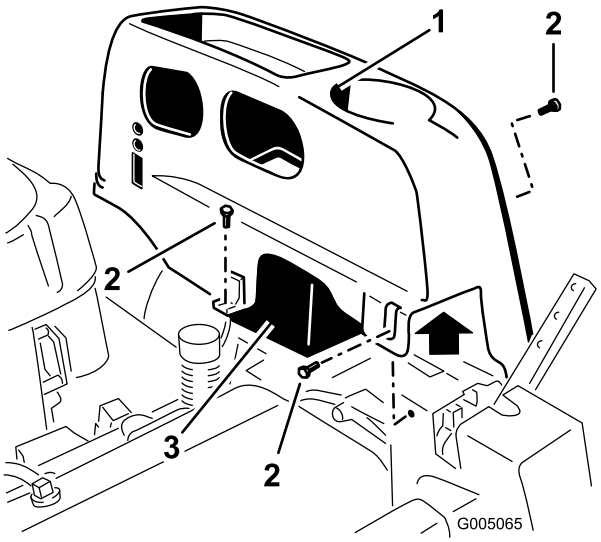

Figure 23

1. Left cover
2. Torx head fasteners (T25)
3. Battery

3. Lift the plastic cover away from the machine. Retain all fasteners.

Replace the cover and secure it to the frame using the fasteners removed previously.

Lubrication

Greasing the Bearings

Service Interval: Every 25 hours—Grease all lubrication points.

Grease Type: No. 2 General Purpose Lithium Base Grease

1. Park the machine on a level surface and disengage the blade control switch.
2. Move the motion control levers outward to the park position, stop the engine, remove the key, and wait for all moving parts to stop before leaving the operating position.
3. Clean the grease fittings (Figure 24 and Figure 25) with a rag. Make sure to scrape any paint off of the front of the fitting(s).

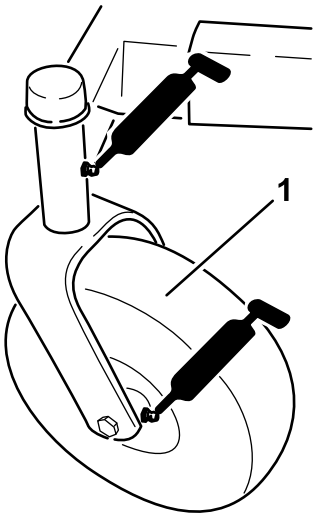

Figure 24

1. Front caster tire

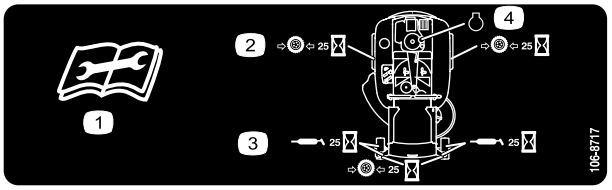

Figure 25

Located on the seat pan underside

1. Read the instructions before servicing or performing maintenance.
2. Check tire pressure every 25 operating hours.
3. Grease every 25 operating hours.
4. Engine

4. Connect a grease gun to each fitting (Figure 24 and Figure 25). Pump grease into the fittings until grease begins to ooze out of the bearings.
5. Wipe up any excess grease.

Engine Maintenance

Servicing the Air Cleaner

Service Interval: Before each use or daily—Check the air cleaner for dirty, loose or damaged parts.

This engine is equipped with a replaceable, high density paper air cleaner element. Check the air cleaner daily or before starting the engine. Check for a buildup of dirt and debris around the air cleaner system. Keep this area clean. Also check for loose or damaged components. Replace all bent or damaged air cleaner components.

Note: Operating the engine with loose or damaged air cleaner components could allow unfiltered air into the engine causing premature wear and failure.

Note: Service the air cleaner more often under extremely dusty, dirty conditions.

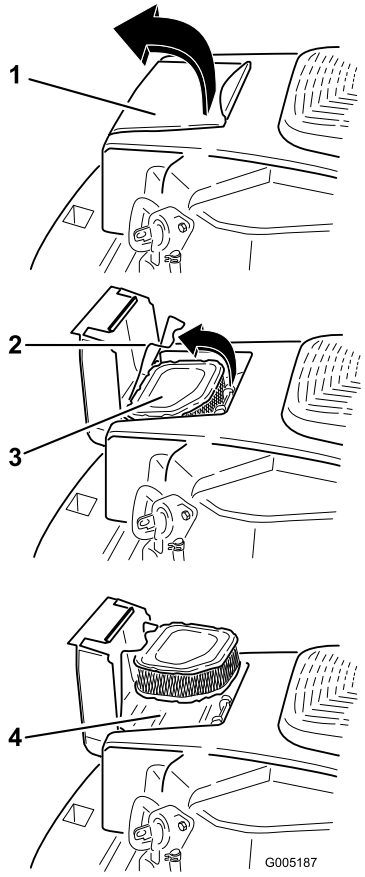

Figure 26

1. Air cleaner cover
2. Air cleaner latch
3. Paper element
4. Air cleaner base

Servicing Paper Element

Service Interval: Every 50 hours—Service the paper element. (more often under extremely dusty, dirty conditions)

Every 100 hours—Replace the paper element. (more often under extremely dusty, dirty conditions)

Check the paper element every 25 hours of operation (more often under extremely dusty or dirty conditions). Clean or replace the element as necessary. Replace the air cleaner element yearly, or every 100 hours.

1. Open the air cleaner cover door on the blower housing to access the air cleaner element (Figure 26).
2. Unhook the latch and remove the air cleaner element (Figure 26).
3. Gently tap the paper element to dislodge dirt. **Do not wash the paper element or use pressurized air**, as this will damage the element. Replace a dirty, bent, or damaged element. Handle the new element carefully; do not use if the sealing surfaces are bent or damaged.
4. Clean the air cleaner base as required and check condition.
5. Install the paper element onto the air cleaner base. Secure with the latch.
6. Close the air cleaner cover door.

Servicing the Engine Oil

Oil Type: Detergent oil (API service SG, SH, SJ, or higher)

Crankcase Capacity: 1.7 qt (1.6 l) when the filter is changed

Viscosity: See the table below.

USE THESE SAE VISCOSITY OILS

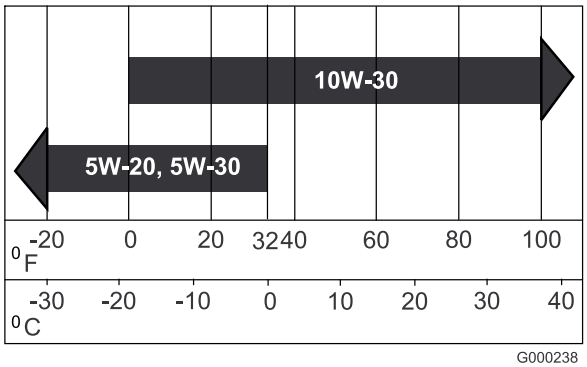

Figure 27

Checking the Oil Level

Service Interval: Before each use or daily—Check the engine oil level.

1. Park the machine on a level surface, disengage the blade control switch, stop the engine, and remove the key.
2. Make sure the engine is stopped, level, and is cool so the oil has had time to drain into the sump.
3. To keep dirt, grass clippings, etc., out of the engine, clean the area around the oil fill cap/dipstick before removing it.
4. Unscrew and remove the dipstick; wipe oil off (Figure 28). Reinsert the dipstick into the tube and rest the cap on the tube. Do not screw the cap onto the tube.

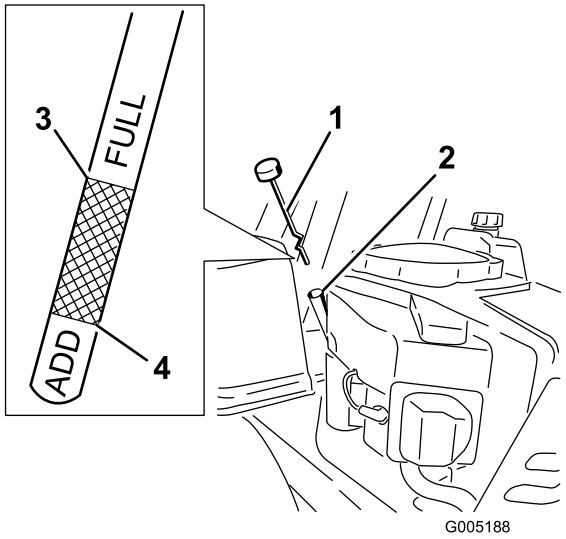

Figure 28

1. Oil dipstick
2. Filler tube
3. Oil level—Full mark
4. Oil level—Add mark

5. Pull the dipstick out and check the oil level. (Figure 28).

   The oil level should be up to, but not over, the "FULL" or "F" mark on the dipstick

6. If the level is low, add oil of the proper type, up to the "FULL" or "F" mark on the dipstick. Always check the level with the dipstick before adding more oil.

   Note: To prevent extensive engine wear or damage, always maintain the proper oil level in the crankcase. Never operate the engine with the oil level below the "ADD" or "L" mark or above the "FULL" or "F" mark on the dipstick.

7. Remove dipstick and check oil level. The level should be between the "Full or F" and "Add or L" marks. If

low, add oil of the proper type up to the full mark. Reinstall oil fill cap/dipstick and screw tight.

Changing the Oil and the Filter

Service Interval: Every 100 hours—Change the engine oil and filter.

Refill with service class SG, SH, SJ or higher oil as specified in the "Viscosity Grades" table.

Change the oil and filter while the engine is still warm. The oil will flow more freely and carry away more impurities. Make sure the engine is level when filling, checking, or changing the oil.

Change the oil and oil filter as follows:

1. Start the engine and let it run until warm. This warms the oil so it drains better.
2. Park the machine so that the drain side is slightly lower than the opposite side to assure the oil drains completely.
3. Disengage the blade control switch and move the motion controls outward to the park position.
4. Stop the engine, remove the key, and wait for all moving parts to stop before leaving the operating position.
5. Locate the oil drain hose on the left side of the engine. The drain plug is attached to a drain hose routed through a drain hole in the machine frame (Figure 29). Clean the area around the oil drain plug cap and the oil drain hose.
6. Place a pan underneath machine directly below the oil drain hose as shown in Figure 29.

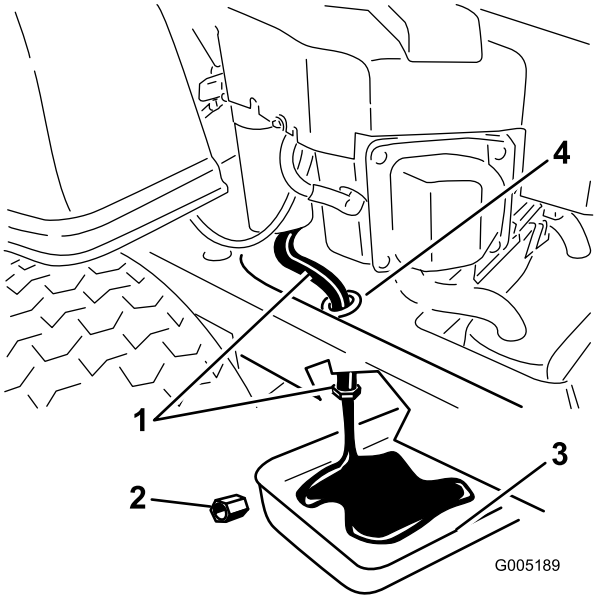

Figure 29

1. Oil drain hose
2. Oil drain plug cap
3. Pan
4. Machine frame hole

7. Using two wrenches (one to hold the oil drain hose and one to loosen the plug), remove the oil drain plug (Figure 29).
8. Remove the oil fill cap/dipstick (Figure 28).
9. Be sure to allow ample time for complete drainage.
10. Locate the oil filter on the right side of the engine. Remove the old filter and wipe off the filter adapter with a clean cloth (Figure 30).

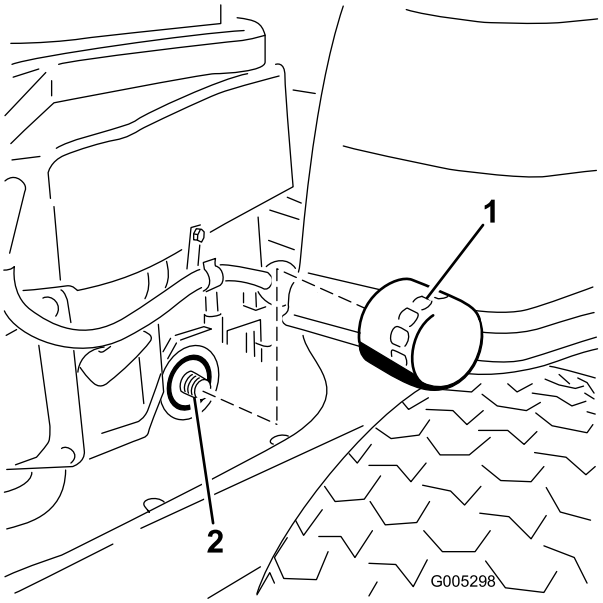

Figure 30

1. Oil filter
2. Adapter

11. Apply a thin film of clean oil to the rubber gasket on the new filter.

12. Install the replacement oil filter to the adapter. Turn the oil filter clockwise until the rubber gasket contacts the pad, then tighten the filter an additional 3/4 to 1 turn (Figure 30). Wipe up any excess oil on the frame.
13. When oil has drained completely, install the oil drain plug. Tighten the plug to 14 N-m (125 in-lb) torque. Wipe up any excess oil (Figure 29).

    Note: Dispose of the used oil at a recycling center.
14. Slowly pour approximately 80% of the specified oil into the filler tube (Figure 28).
15. Install the oil fill cap/dipstick (Figure 28).
16. Check the oil level (Figure 28); refer to Checking the Oil Level.
17. Slowly add additional oil to bring it to the full mark.
18. Install the oil fill cap/dipstick and screw tight (Figure 28).

Servicing the Spark Plug

Service Interval: Every 200 hours—Check spark plug(s) condition and gap.

Every 500 hours—Replace the spark plug(s).

The spark plug is RFI compliant. Equivalent alternate brand plugs can also be used. Spark plug replacement is recommended at 500 hours.

Type: Champion XC12YC (or equivalent)

Air Gap: 0.030 inch (0.76 mm)

Removing the Spark Plug

1. Disengage the blade control switch, move the motion controls outward to the park position, stop the engine, and remove the key.
2. Before removing the spark plug(s), clean the area around the base of the plug to keep dirt and debris out of the engine.

   Pull the wire off of the spark plug(s) (Figure 31).
3. Clean around the spark plug(s) to prevent dirt from falling into the engine and potentially causing damage. Remove the spark plug(s) and metal washer.

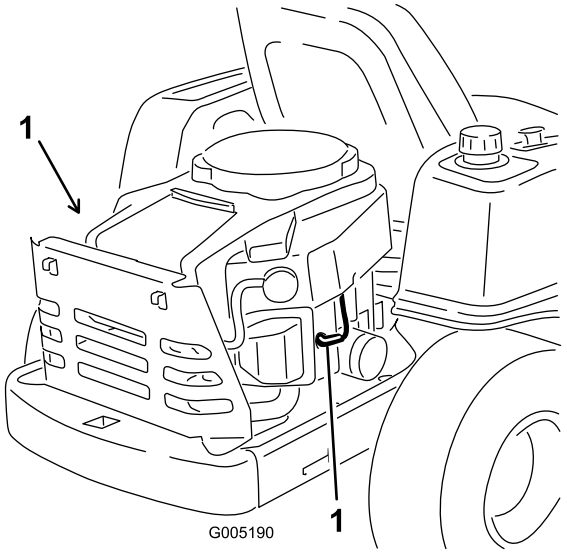

Figure 31

1. Spark plug and wire locations

Checking the Spark Plug

1. Look at the center of the spark plug (Figure 32). If you see light brown or gray on the insulator, the engine is operating properly. A black coating on the insulator usually means the air cleaner is dirty.

   Important: Never clean the spark plug. Always replace the spark plug when it has a black coating, worn electrodes, an oily film, or cracks.
2. Check the gap between the center and side electrodes (Figure 32). Bend the side electrode (Figure 32) if the gap is not correct.

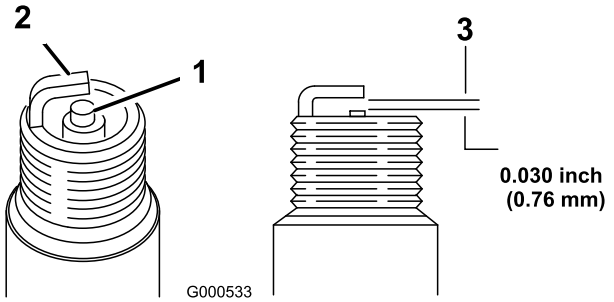

Figure 32

1. Center electrode insulator
2. Side electrode
3. Air gap (not to scale)

Installing the Spark Plug

1. Install the spark plug. Make sure that the air gap is set correctly.
2. Tighten the spark plug to 18-22 ft-lb (25-29 N-m).
3. Push the wire onto the spark plug (Figure 31).

Cleaning the Blower Housing

To ensure proper cooling, make sure the grass screen, cooling fins, and other external surfaces of the engine are kept clean at all times.

Annually or every 100 hours of operation (more often under extremely dusty, dirty conditions), remove the blower housing and any other cooling shrouds. Clean the cooling fins and external surfaces as necessary. Make sure the cooling shrouds are reinstalled. Torque the blower housing screws to 5.5 ft-lb (7.5 N-m).

Important: Operating the engine with a blocked grass screen, dirty or plugged cooling fins, and/or cooling shrouds removed, will cause engine damage due to overheating.

Fuel System Maintenance

In certain conditions, gasoline is extremely flammable and highly explosive. A fire or explosion from gasoline can burn you and others and can damage property.

- **Perform any fuel related maintenance when the engine is cold. Do this outdoors in an open area. Wipe up any gasoline that spills.**
- **Never smoke when draining gasoline, and stay away from an open flame or where a spark may ignite the gasoline fumes.**

Replacing the Fuel Filter

Service Interval: Every 100 hours—Replace the fuel filter.

Never install a dirty filter if it is removed from the fuel line.

1. Park the machine on a level surface and disengage the blade control switch.
2. Move the motion control levers outward to the park position, stop the engine, remove the key, and wait for all moving parts to stop before leaving the operating position.
3. Raise the seat and locate the fuel line coming from the fuel tank below. The fuel filter is in the fuel line between the tank and engine.

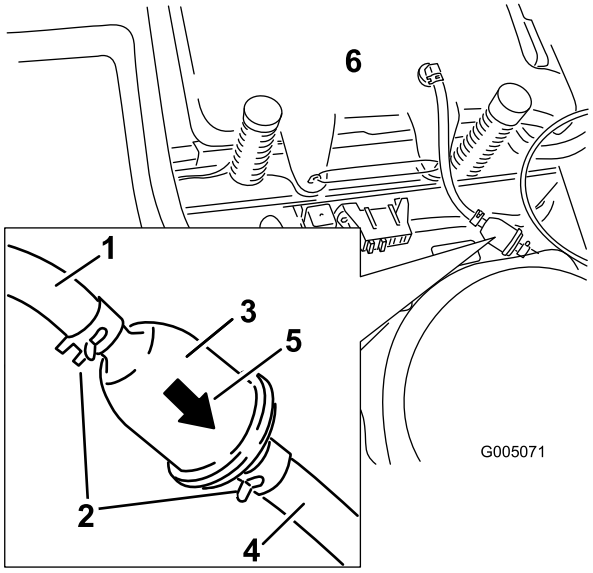

Figure 33

1. Fuel line from tank
2. Hose clamp
3. Filter
4. Fuel line to engine
5. Flow direction arrow
6. Fuel tank

4. Squeeze the ends of the hose clamps together and slide them away from the filter (Figure 33).
5. Remove the filter from the fuel lines.
6. Install a new filter with the flow direction arrow coming from the fuel tank and pointing to the engine. Move the hose clamps close to the filter (Figure 33) to secure it in place.

Electrical System Maintenance

Charging the Battery

Removing the Battery

Battery terminals or metal tools could short against metal machine components causing sparks. Sparks can cause the battery gasses to explode, resulting in personal injury.

- **When removing or installing the battery, do not allow the battery terminals to touch any metal parts of the machine.**
- **Do not allow metal tools to short between the battery terminals and metal parts of the machine.**

1. Park the machine on a level surface and disengage the blade control switch.
2. Move the motion control levers outward to the park position, stop the engine, remove the key, and wait for all moving parts to stop before leaving the operating position.
3. Remove the left side console to access the battery. Refer the Accessing the Battery procedure in the Premaintenance Procedures for instructions.
4. Disconnect the negative (black) ground cable from the battery post (Figure 34). Retain all fasteners.

Incorrect battery cable routing could damage the machine and cables causing sparks. Sparks can cause the battery gasses to explode, resulting in personal injury.

- **Always disconnect the negative (black) battery cable before disconnecting the positive (red) cable.**
- **Always connect the positive (red) battery cable before connecting the negative (black) cable.**

5. Slide the rubber cover up the positive (red) cable. Disconnect the positive (red) cable from the battery post (Figure 34). Retain all fasteners.
6. Remove the battery hold-down (Figure 34) and lift the battery from the battery tray.

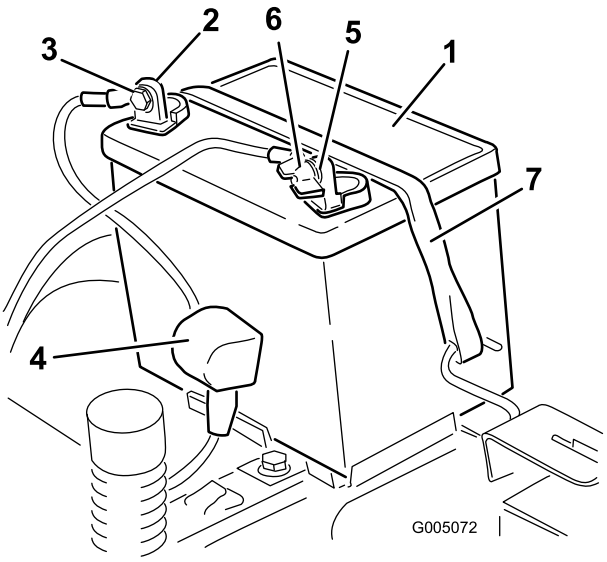

Figure 34

1. Battery
2. Positive battery post
3. Bolt, washer, and nut
4. Terminal boot
5. Negative battery post
6. Wing nut, washer, and bolt
7. Battery hold-down

Charging the Battery

Service Interval: Before storage—Charge the battery and disconnect battery cables.

1. Remove the battery from the chassis; refer to Removing the Battery.
2. Charge the battery for a minimum of 1 hour at 6 to 10 amps. Do not overcharge the battery.
3. When the battery is fully charged, unplug the charger from the electrical outlet, then disconnect the charger leads from the battery posts (Figure 35).

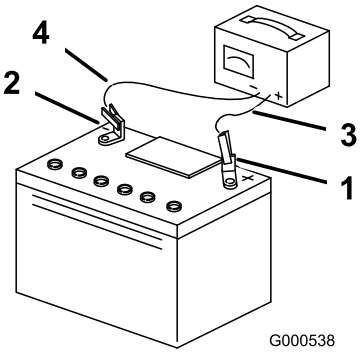

Figure 35

1. Positive battery post
2. Negative battery post
3. Red (+) charger lead
4. Black (-) charger lead

Note: Do not run the machine with the battery disconnected, electrical damage may occur.

Installing the Battery

1. Position the battery in the tray with the terminal posts toward the operating position (Figure 34).
2. Install the positive (red) battery cable to the positive (+) battery terminal using the fasteners removed previously.
3. Install the negative battery cable to the negative (-) battery terminal using the fasteners removed previously.
4. Slide the red terminal boot onto the positive (red) battery post.
5. Secure the battery with the hold-down (Figure 34).
6. Install the left side console. Refer to the Accessing the Battery procedure in Premaintenance Procedures for instructions.

Servicing the Fuses

The electrical system is protected by fuses. It requires no maintenance; however, if a fuse blows, check the component/circuit for a malfunction or short.

Fuse:

- Main F1-30 amp, blade-type
- Charge Circuit F2-25 amp, blade-type

1. Raise the seat to gain access to the fuse holder (Figure 36).
2. To replace a fuse, pull out on the fuse to remove it (Figure 36).

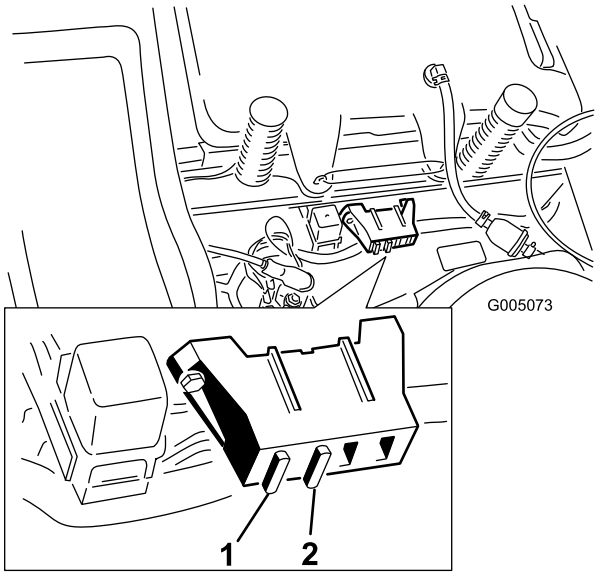

Figure 36

1. Main-30 amp
2. Charge circuit-25 amp

Drive System Maintenance

Checking the Tire Pressure

Service Interval: Every 25 hours—Check tire pressure.

Maintain the air pressure in the front and rear tires as specified. Uneven tire pressure can cause uneven cut. Check the pressure at the valve stem (Figure 37). Check the tires when they are cold to get the most accurate pressure reading.

Rear Tires: 13 psi (90 kPa)

Front Tires (caster wheels): 20 psi (138 kPa)

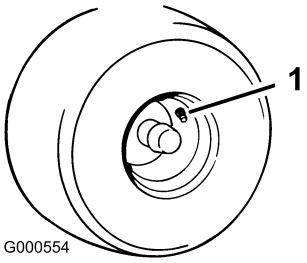

Figure 37

1. Valve stem

Mower Maintenance

Servicing the Cutting Blades

Maintain sharp blades throughout the cutting season because sharp blades cut cleanly without tearing or shredding the grass blades. Tearing and shredding turns grass brown at the edges, which slows growth and increases the chance of disease.

Check the cutter blades daily for sharpness, and for any wear or damage. File down any nicks and sharpen the blades as necessary. If a blade is damaged or worn, replace it immediately with a genuine Toro replacement blade. For convenient sharpening and replacement, you may want to keep extra blades on hand.

A worn or damaged blade can break, and a piece of the blade could be thrown into the operator's or bystander's area, resulting in serious personal injury or death.

- **Inspect the blade periodically for wear or damage.**
- **Replace a worn or damaged blade.**

Before Inspecting or Servicing the Blades

Park the machine on a level surface, disengage the blade control switch, and move the motion control levers outward to the park position. Stop the engine and remove the key.

Inspecting the Blades

Service Interval: Before each use or daily—Check the cutting blades.

1. Inspect the cutting edges (Figure 38). If the edges are not sharp or have nicks, remove and sharpen the blades; refer to Sharpening the Blades.
2. Inspect the blades, especially the curved area (Figure 38). If you notice any damage, wear, or a slot forming in this area (item 3 in Figure 38), immediately install a new blade.

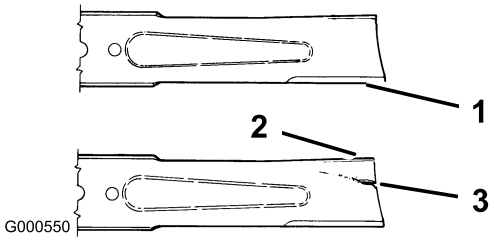

Figure 38

1. Cutting edge
2. Curved area
3. Wear/slot forming

Checking for Bent Blades

1. Raise the height-of-cut lever to the transport position, cutting height position **G** (also the 4-1/2 inch [115 mm]).
2. Rotate the blades until the ends face forward and backward (Figure 39). Measure from a level surface to the cutting edge, position **A**, of the blades (Figure 39). Note this dimension.

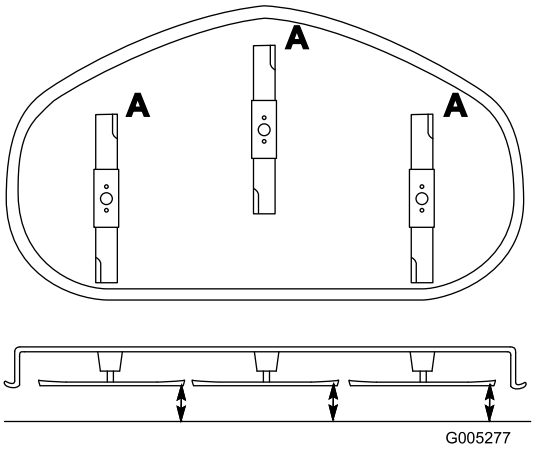

Figure 39

3. Rotate the opposite ends of the blades forward.
4. Measure from a level surface to the cutting edge of the blades at the same position as in step 2. The difference between the dimensions obtained in steps 2 and 3 must not exceed 1/8 inch (3 mm). If this dimension exceeds 1/8 inch (3 mm), the blade is bent and must be replaced. Refer to Removing the Blades and Installing the Blades.

   Note: If a bent blade is replaced with a new one and the dimension obtained continue to exceed 1/8 inch (3mm), the blade spindle could be bent. Contact an Authorized Toro Dealer for service.

A blade that is bent or damaged could break apart and could seriously injure or kill you or bystanders.

- **Always replace bent or damaged blade with a new blade.**
- **Never file or create sharp notches in the edges or surfaces of blade.**

Removing the Blades

The blades must be replaced if a solid object is hit, if the blade is out of balance, or the blade is bent. To ensure optimum performance and continued safety conformance of the machine, use genuine Toro replacement blades. Replacement blades made by other manufacturers may result in non-conformance with safety standards.

Hold the blade end using a rag or thickly-padded glove. Remove the blade bolt, curved washer, blade stiffener, and blade from the spindle shaft (Figure 40).

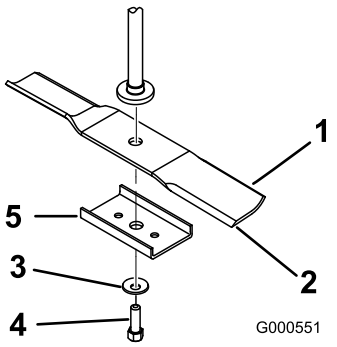

Figure 40

1. Sail area of blade
2. Blade
3. Curved washer
4. Blade bolt
5. Blade stiffener

Sharpening the Blades

1. Use a file to sharpen the cutting edge at both ends of the blade (Figure 41). Maintain the original angle. The blade retains its balance if the same amount of material is removed from both cutting edges.

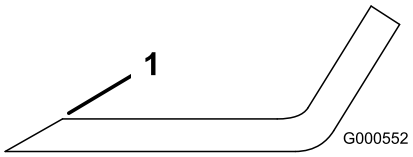

Figure 41

1. Sharpen at original angle

2. Check the balance of the blade by putting it on a blade balancer (Figure 42). If the blade stays in a horizontal position, the blade is balanced and can be used. If the blade is not balanced, file some metal off the end of the sail area only (Figure 41). Repeat this procedure until the blade is balanced.

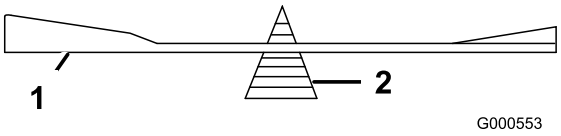

Figure 42

1. Blade
2. Balancer

Installing the Blades

1. Install the blade onto the spindle shaft (Figure 40).

   Important: The curved part of the blade must be pointing upward toward the inside of the mower to ensure proper cutting.

2. Install the blade stiffener, the curved washer (cupped side toward the blade) and the blade bolt (Figure 40).
3. Torque the blade bolt to 35-65 ft-lb (47-88 N-m).

Leveling the Mower from Side-to-Side

The mower blades must be level from side to side. Check the side-to-side level any time you install the mower or when you see an uneven cut on your lawn.

1. Park the machine on a level surface and disengage the blade control switch.
2. Move the motion control levers outward to the park position, stop the engine, remove the key, and wait for all moving parts to stop before leaving the operating position.
3. Check the air pressure of all four tires. If needed, adjust to the recommended inflation; refer to Checking the Tire Pressure in the Drive System Maintenance section.
4. Set the height-of-cut lever to position **D** [3 inch (76 mm)].

5. Carefully rotate the blade(s) side to side (Figure 43). If both measurements are not within 3/16 inch (5 mm), an adjustment is required; continue with this procedure.

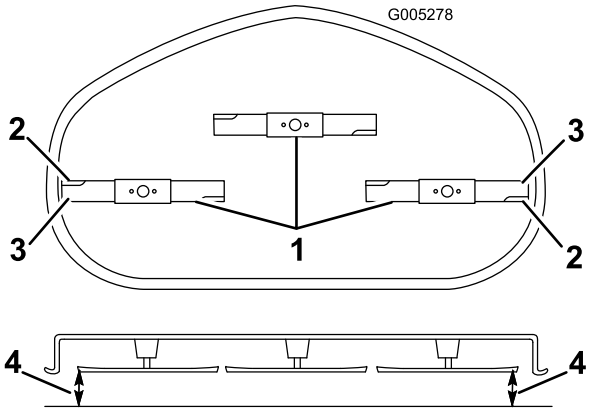

Figure 43

1. Blades side to side
2. Sail area of blade
3. Outside cutting edges
4. Measure here

6. Measure between the outside cutting edges and the flat surface (Figure 43). If both measurements are not within 3/16 inch (5 mm), an adjustment is required; continue with this procedure.
7. Move to the left side of the machine. Loosen, but do not remove, the rear locking nut on the hanger bracket (Figure 44).
8. Loosen the side locking nut on the hanger bracket just enough to allow the eccentric plate to be adjusted (Figure 44). Use a 3/8 inch drive extension on a socket wrench to manipulate the eccentric plate. Use the wrench to reposition the height of the mower deck and adjust to the desired height.
9. Stop the deck at the adjusted position and tighten the side locking nut on the hanger bracket to hold the new position (Figure 44). Tighten the rear locking nut on the hanger bracket.
10. Continue leveling the deck by checking the front-to-rear blade slope; refer to Adjusting the Front-to-Rear Blade Slope.

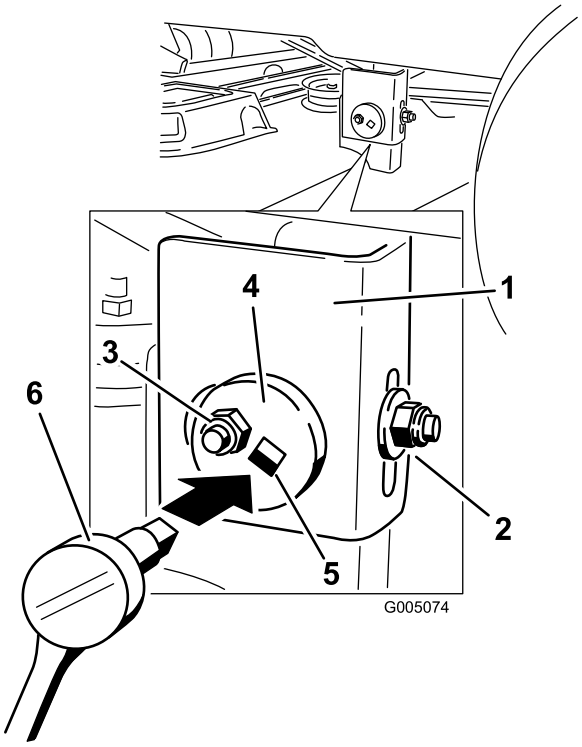

Figure 44

1. Hanger bracket
2. Rear locking nut
3. Side locking nut
4. Eccentric adjustment plate
5. Socket wrench hole
6. Socket wrench with 3/8 inch extension

Adjusting the Front-to-Rear Blade Slope

Check the front-to-rear blade level any time you install the mower. If the front of the mower is more than 5/16 inch (7.9 mm) lower than the rear of the mower, adjust the blade level using the following instructions:

1. Park the machine on a level surface and disengage the blade control switch.
2. Move the motion control levers outward to the park position, stop the engine, remove the key, and wait for all moving parts to stop before leaving the operating position.
3. Check the air pressure of all four tires. If needed, adjust to the recommended inflation; refer to Checking the Tire Pressure in the Drive System Maintenance section.
4. Check and adjust the side-to-side blade level if you have not checked the setting; refer to Leveling the Mower from Side-to-Side.
5. Set the height-of-cut at position **D** [3 inch (76 mm)] and carefully rotate the blades so they are facing front to rear (Figure 45).

6. Measure from the tip of the front blade to the flat surface and the tip of the rear blade to the flat surface (Figure 45). If the front blade tip is not 1/16-5/16 inch (1.6-7.9 mm) lower than the rear blade tip, adjust the front locknut.

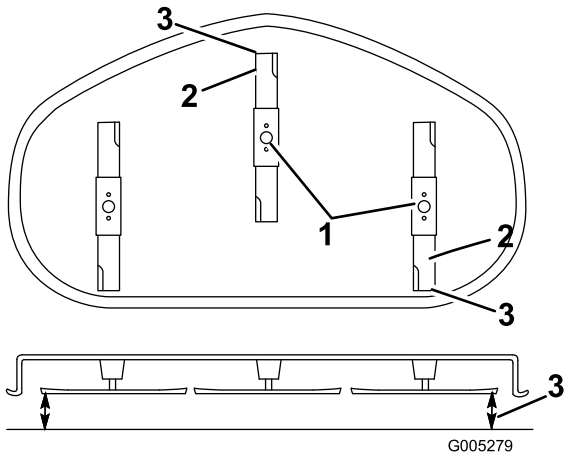

Figure 45

1. Blades front to rear
2. Outside cutting edges
3. Measure here

7. To adjust the front-to-rear blade slope, rotate the adjustment nut in the front of the mower (Figure 46).

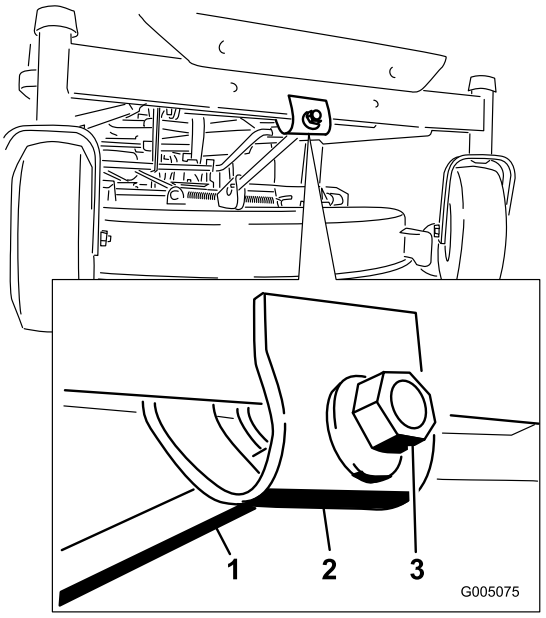

Figure 46

1. Adjusting rod
2. Adjusting block
3. Lock nut

8. To raise the front of the mower, tighten the adjustment nut. To lower the front of the mower, loosen the adjustment nut.
9. After adjustment, check the front-to-rear slope again. Continue adjusting the nut until the front blade tip is 1/16-5/16 inch (1.6-7.9 mm) lower than the rear blade tip (Figure 45).
10. When the front-to-rear blade slope is correct check the side-to-side level of the mower again; refer to Leveling the Mower from Side-to-Side.

Removing the Mower

1. Park the machine on a level surface and disengage the blade control switch.
2. Move the motion control levers outward to the park position, stop the engine, remove the key, and wait for all moving parts to stop before leaving the operating position.
3. Lower the height-of-cut lever to the lowest position.
4. Remove the hairpin cotter and clevis pin from the front support rod (Figure 47). Carefully lower the front of the mower deck to the ground.

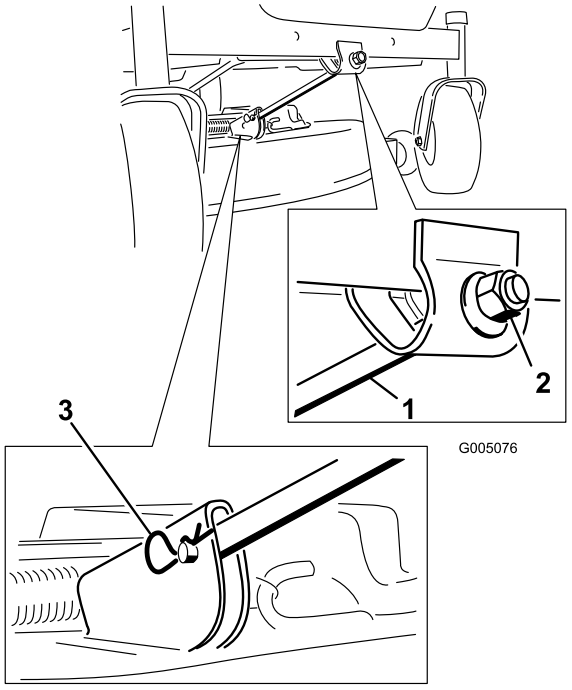

Figure 47

1. Front support rod
2. Locking nut
3. Hairpin cotter and clevis pin

5. Lift the mower deck and hanger brackets clear of the rear lift rod and lower the mower carefully to the ground (Figure 48).

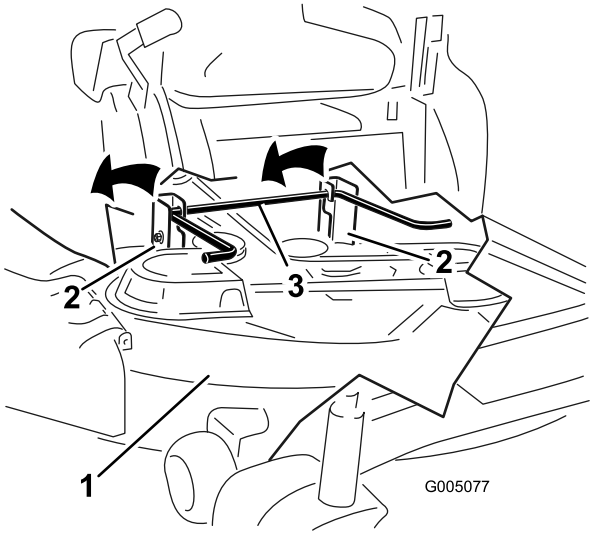

Figure 48

1. Mower deck
2. Hanger bracket
3. Rear lift rod

6. Slide the mower deck rearward to remove the mower belt from the engine pulley.
7. Slide the mower deck out from underneath the machine.

Note: Retain all parts for future installation.

Mower Belt Maintenance

Inspecting the Belts

Service Interval: Every 25 hours—Check the belts for wear/cracks.

Check the belts for cracks, frayed edges, burn marks, or any other damage. Replace damaged belts.

Replacing the Mower Belt

Squealing when the belt is rotating, blades slipping when cutting grass, frayed belt edges, burn marks, and cracks are signs of a worn mower belt. Replace the mower belt if any of these conditions are evident.

1. Park the machine on a level surface and disengage the blade control switch.
2. Move the motion control levers outward to the park position, stop the engine, remove the key, and wait for all moving parts to stop before leaving the operating position.
3. Set the height-of-cut at **A** [1-1/2 inch (38 mm)].
4. Remove the belt covers over the outside spindles.
5. Pull the idler pulley in the direction shown in Figure 49 and roll the belt off of the pulleys.

The spring is under tension when installed and can cause personal injury.

Be careful when removing the belt.

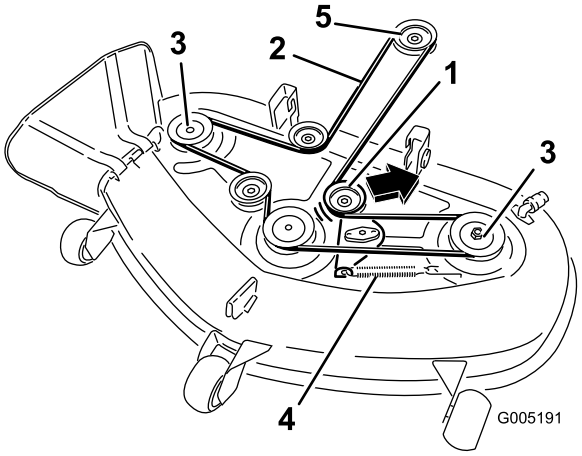

Figure 49

1. Idler pulley
2. Mower belt
3. Outside pulley
4. Spring
5. Engine pulley

6. Route the new belt around the engine pulley and mower pulleys (Figure 49).
7. Pull the idler pulley in the direction shown in Figure 49 and route the belt onto the idler pulley (Figure 49).
8. Install the belt covers over the outside spindles.

Installing the Mower

1. Park the machine on a level surface and disengage the blade control switch.
2. Move the motion control levers outward to the park position, stop the engine, remove the key, and wait for all moving parts to stop before leaving the operating position.
3. Slide the mower under the machine.
4. Lower the height-of-cut lever to the lowest position.
5. Lift the rear of the mower deck and guide the hanger brackets over the rear lift rod (Figure 48).
6. Attach the front support rod to the mower deck with the clevis pin and hairpin cotter (Figure 47).
7. Install the mower belt onto the engine pulley; refer to Replacing the Mower Belt.

Replacing the Grass Deflector

Service Interval: Before each use or daily—Inspect the grass deflector for damage

An uncovered discharge opening could allow the lawn mower to throw objects in the operator's or bystander's direction and result in serious injury. Also, contact with the blade could occur.

Never operate the machine without grass deflector, discharge cover or grass collection system in place.

Inspect the grass deflector for damage before each use. Replace any damaged parts before use.

1. Locate items shown in Figure 50.
2. Remove the nut (3/8 inch) from the rod under the mower (Figure 50).

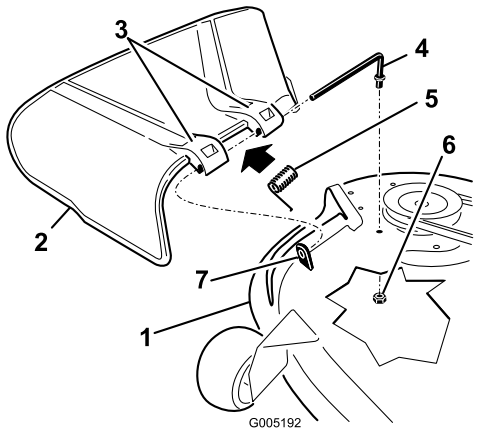

Figure 50

1. Mower deck
2. Grass deflector
3. Grass deflector bracket
4. Spring
5. Rod
6. Nut, 3/8 inch
7. Short stand-off

3. Slide the rod out of the short stand-off, internal lock washer, spring, and grass deflector (Figure 50). Remove the damaged or worn grass deflector.
4. Replace the grass deflector and internal lock washer (Figure 50).
5. Slide rod, straight end, through the rear grass deflector bracket.
6. Place the spring on the rod, with end wires down, and between the grass deflector brackets. Slide rod through second grass deflector bracket and internal lock washer (Figure 50).
7. Insert rod at front of grass deflector into short stand-off on deck. Secure rear end of rod into the mower with a nut (3/8 inch) (Figure 50).

Important: The grass deflector must be spring loaded in the down position. Lift the deflector up to test that it snaps to the full down position.

Cleaning

Washing the Underside of the Mower

Service Interval: Before each use or daily—Clean the mower housing.

Washing the underside of the mower after each use prevents grass buildup and improves mulching and clipping dispersal.

1. Park the machine on a level surface and disengage the blade control switch.
2. Move the motion control levers outward to the park position, stop the engine, remove the key, and wait for all moving parts to stop before leaving the operating position.
3. Attach the hose coupling to the end of the mower washout fitting, and turn the water on high (Figure 51).

   Note: Spread petroleum jelly on the washout fitting O-ring to make the coupling slide on easier and protect the O-ring.

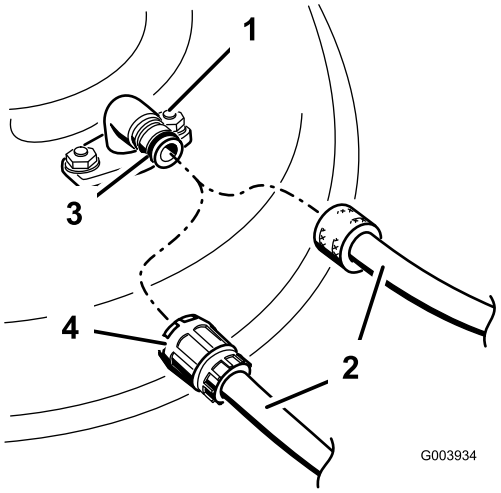

Figure 51

1. Washout fitting
2. Hose
3. O-ring
4. Coupling

4. Lower the mower to the lowest height-of-cut.
5. Sit on the seat and start the engine. Engage the blade control switch and let the mower run for one to three minutes.
6. Disengage the blade control switch, stop the engine, and remove the ignition key. Wait for all moving parts to stop.
7. Turn the water off and remove the coupling from the washout fitting.

   Note: If the mower is not clean after one washing, soak it and let it stand for 30 minutes. Then repeat the process.
8. Run the mower again for one to three minutes to remove excess water.

A broken or missing washout fitting could expose you and others to thrown objects or blade contact. Contact with blade or thrown debris can cause injury or death.

- **Replace broken or missing washout fitting immediately, before using mower again.**
- **Never put your hands or feet under the mower or through openings in the mower.**

Storage

Cleaning and Storage

1. Disengage the blade control switch, move the motion controls outward to the park position, stop the engine, and remove the key.
2. Remove grass clippings, dirt, and grime from the external parts of the entire machine, especially the engine. Clean dirt and chaff from the outside of the engine cylinder head fins and blower housing.

   Important: You can wash the machine with mild detergent and water. Do not pressure wash the machine. Avoid excessive use of water, especially near the control panel, engine, hydraulic pumps, and motors.
3. Service the air cleaner; refer to Servicing the Air Cleaner in the Engine Maintenance section.
4. Grease and oil the machine; refer to the Lubrication section.
5. Change the crankcase oil and filter; refer to Servicing the Engine Oil in the Engine Maintenance section.
6. Check the tire pressure; refer to Checking the Tire Pressure in the Drive System Maintenance section.
7. Charge the battery; refer to Servicing the Battery in the Electrical System Maintenance section.
8. Check the condition of the blades; refer to Servicing the Cutting Blades in the Mower Maintenance section.
9. Prepare the machine for storage when non-use occurs over 30 days. Prepare the machine for storage as follows.
10. Add a petroleum based stabilizer/conditioner to the fuel in the tank. Follow the mixing instructions from the stabilizer manufacturer. Do not use an alcohol based stabilizer (ethanol or methanol).

    Note: A fuel stabilizer/conditioner is most effective when mixed with fresh gasoline and used at all times.

    Run the engine to distribute the conditioned fuel through the fuel system (5 minutes).

    Stop the engine, allow it to cool, and drain the fuel tank; refer to Draining the Fuel Tank in the Fuel System Maintenance section.

    Restart the engine and run it until it stops.

    Choke the engine. Start and run the engine until it will not start.

    Dispose of fuel properly. Recycle pursuant to local codes.

    Important: Do not store stabilizer/conditioned gasoline over 30 days.
11. Remove the spark plug(s) and check its condition; refer to Servicing the Spark Plug in the Engine Maintenance section. With the spark plug(s) removed from the engine, pour two tablespoons of engine oil into the spark plug hole. Use the starter to crank the engine and distribute the oil inside the cylinder. Install the spark plug(s). Do not install the wire on the spark plug(s).
12. Clean any dirt and chaff from the top of the mower.
13. Scrape any heavy buildup of grass and dirt from the underside of the mower, then wash the mower with a garden hose.
14. Check the condition of the drive and mower belts.
15. Check and tighten all bolts, nuts, and screws. Repair or replace any part that is worn or damaged.
16. Paint all scratched or bare metal surfaces. Paint is available from your Authorized Service Dealer.
17. Store the machine in a clean, dry garage or storage area. Remove the key from the ignition switch and keep it in a memorable place. Cover the machine to protect it and keep it clean.

Troubleshooting

Problem	Possible Cause	Corrective Action
The engine overheats.	1. The engine load is excessive. 2. The oil level in the crankcase is low. 3. The cooling fins and air passages under the engine blower housing are plugged. 4. The air cleaner is dirty. 5. Dirt, water, or stale fuel is in fuel system.	1. Reduce ground speed. 2. Add oil to the crankcase. 3. Remove the obstruction from the cooling fins and air passages. 4. Clean or replace the air cleaner element. 5. Contact an Authorized Service Dealer
The starter does not crank	1. The blade control switch is engaged. 2. The motion control levers are not in the park position. 3. The operator is not seated. 4. The battery is dead. 5. The electrical connections are corroded or loose. 6. A fuse is blown. 7. A relay or switch is damaged.	1. Move the blade control switch to Disengaged. 2. Move the motion control levers outward to the park position. 3. Sit on the seat. 4. Charge the battery. 5. Check the electrical connections for good contact. 6. Replace the fuse. 7. Contact an Authorized Service Dealer.
The engine will not start, starts hard, or fails to keep running.	1. The fuel tank is empty. 2. The choke is not on. 3. The air cleaner is dirty. 4. The spark plug wire(s) is loose or disconnected. 5. The spark plug(s) is pitted, fouled, or the gap is incorrect. 6. There is dirt in fuel filter. 7. Dirt, water, or stale fuel is in fuel system. 8. There is incorrect fuel in the fuel tank. 9. The oil level in the crankcase is low.	1. Fill the fuel tank. 2. Pull up on the choke control. 3. Clean or replace the air cleaner element. 4. Install the wire(s) on the spark plug. 5. Install a new, correctly gapped spark plug(s). 6. Replace the fuel filter. 7. Contact an Authorized Service Dealer. 8. Drain the tank and replace the fuel with the proper type. 9. Add oil to the crankcase.
The engine loses power.	1. The engine load is excessive. 2. The air cleaner is dirty. 3. The oil level in the crankcase is low. 4. The cooling fins and air passages under the engine blower housing are plugged. 5. The spark plug(s) is pitted, fouled, or the gap is incorrect. 6. The vent in the fuel cap is closed. 7. There is dirt in the fuel filter. 8. Dirt, water, or stale fuel is in the fuel system. 9. There is incorrect fuel in the fuel tank.	1. Reduce ground speed. 2. Clean the air cleaner element. 3. Add oil to the crankcase. 4. Remove the obstruction from the cooling fins and air passages. 5. Install a new, correctly gapped spark plug(s). 6. Open the vent in the fuel cap. 7. Replace the fuel filter. 8. Contact an Authorized Service Dealer. 9. Drain the tank and replace the fuel with the proper type.
The machine does not drive.	1. The bypass valves are open 2. The traction belts are worn, loose, or broken. 3. The traction belts are off of the pulleys. 4. The transmission has failed.	1. Close the tow valves. 2. Contact an Authorized Service Dealer. 3. Contact an Authorized Service Dealer. 4. Contact an Authorized Service Dealer.

Problem	Possible Cause	Corrective Action
There is abnormal vibration.	1. The engine mounting bolts are loose. 2. The engine pulley, idler pulley, or blade pulley is loose. 3. The engine pulley is damaged. 4. The cutting blade(s) is/are bent or unbalanced. 5. A blade mounting bolt is loose. 6. A blade spindle is bent.	1. Tighten the engine mounting bolts. 2. Tighten the appropriate pulley. 3. Contact an Authorized Service Dealer. 4. Install a new cutting blade(s). 5. Tighten the blade mounting bolt. 6. Contact an Authorized Service Dealer.
Uneven cutting height.	1. The blade(s) is not sharp. 2. A cutting blade(s) is/are bent. 3. The mower is not level. 4. An anti-scalp wheel is not set correctly. 5. The underside of the mower is dirty. 6. The tire pressure is incorrect. 7. A blade spindle is bent.	1. Sharpen the blade(s). 2. Install a new cutting blade(s). 3. Level the mower from side-to-side and front-to-rear. 4. Adjust the anti-scalp wheel height. 5. Clean the underside of the mower. 6. Adjust the tire pressure. 7. Contact an Authorized Service Dealer.
The blades do not rotate.	1. The drive belt is worn, loose or broken. 2. The drive belt is off of the pulley. 3. The mower belt is worn, loose, or broken.	1. Install a new drive belt. 2. Install the drive belt and check the adjusting shafts and belt guides for the correct position. 3. Install a new mower belt.

Schematics

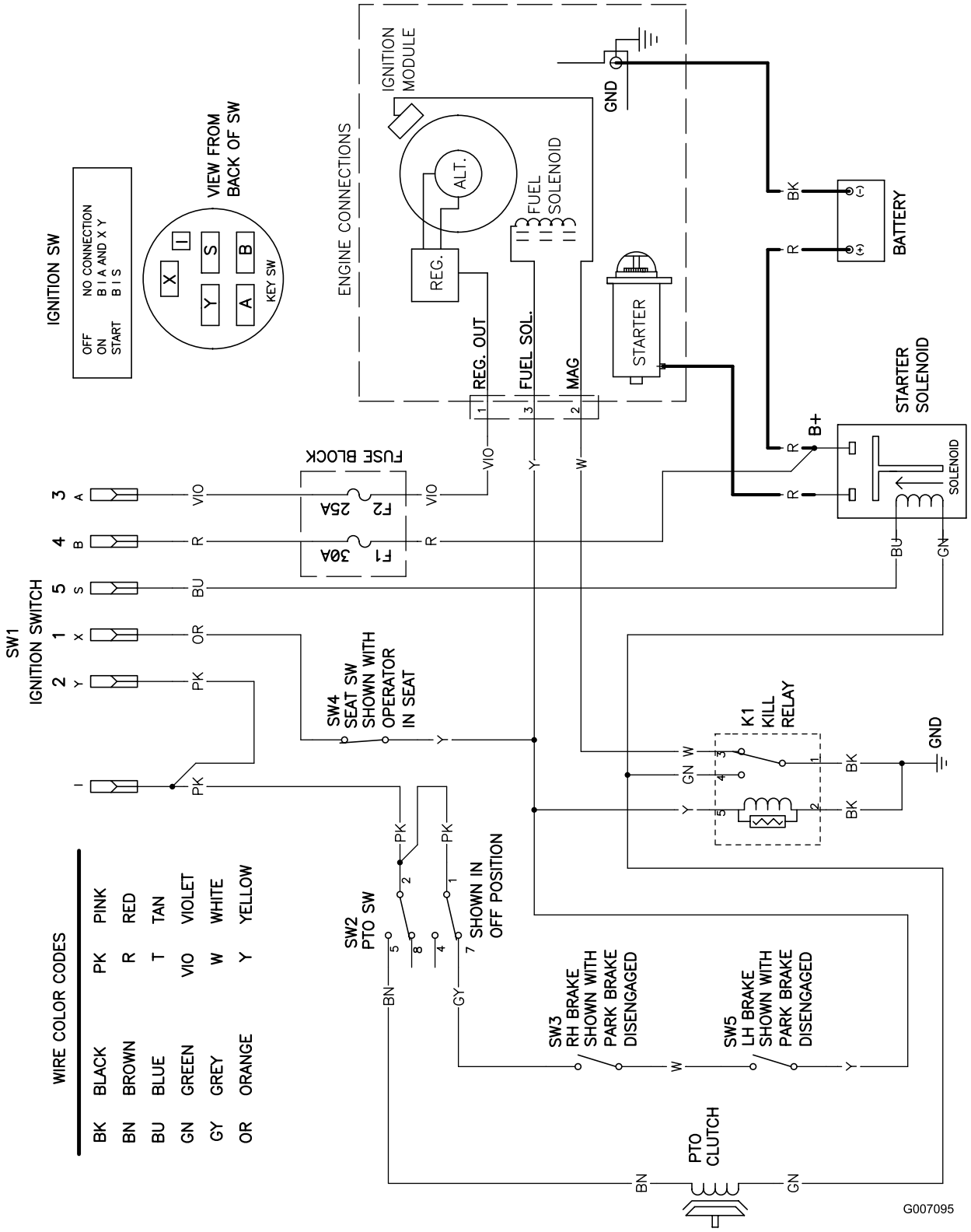

Electrical Diagram (Rev. A)

International Distributor List—Consumer Products

Distributor:	Country:	Phone Number:
Atlantis Su ve Sulama Sisstemleri Lt	Turkey	90 216 344 86 74
Balama Prima Engineering Equip	Hong Kong	852 2155 2163
B-Ray Corporation	Korea	82 32 551 2076
Casco Sales Company	Puerto Rico	787 788 8383
Ceres S.A	Costa Rica	506 239 1138
CSSC Turf Equipment (pvt) Ltd	Sri Lanka	94 11 2746100
Cyril Johnston & Co	Nothern Ireland	44 2890 813 121
Equiver	Mexico	52 55 539 95444
Femco S.A.	Guatemala	502 442 3277
G.Y.K. Company ltd.	Japan	81 726 325 861
Geomechaniki of Athens	Greece	30 10 935 0054
Guandong Golden Star	China	86 20 876 51338
Hako Gorund and Garden	Sweden	46 35 10 0000
Hydroturf Int. Co	Dubai United Arab Emirates	97 14 347 9479
Hydroturf Egypt LLC	Egypt	202 519 4308
Ibea S.p.A.	Italy	39 0331 853611
Irriamc	Portugal	351 21 238 8260
Jean Heybroek b.v.	Netherlands	31 30 639 4611
Lely (U.K.) Limited	United Kingdom	44 1480 226 800
Maquiver S.A.	Columbia	57 1 236 4079
Maruyama Mfg. Co. Inc.	Japan	81 3 3252 2285
Metra Kft	Hungary	36 1 326 3880
Mountfield a.s.	Czech Republic	420 255 704 220
Munditol S.A.	Argentina	54 11 4 821 9999
Oslinger Turf Equipment SA	Ecuador	593 4 239 6970
Oy Hako Ground and Garden Ab	Finland	358 987 00733
Parkland Products Ltd	New Zealand	64 3 34 93760
Prochaska & Cie	Austria	43 1 278 5100
RT Cohen 2004 Ltd	Israel	972 986 17979
Riversa	Spain	34 9 52 83 7500
Roth Motorgerate GmBh & Co	Germany	49 7144 2050
Sc Svend Carlsen A/S	Denmark	45 66 109 200
Solvert S.A.S	France	33 1 30 81 77 00
Spypros Stavrinides Limited	Cyprus	357 22 434131
Surge Systems India Limited	India	91 1 292299901
T-Markt Logistics Ltd	Hungary	36 26 525 500
Toro Australia	Australia	61 3 9580 7355
Toro Europe BVBA	Belgium	32 14 562 960

The Toro Warranty

Conditions and Products Covered

The Toro® Company and its affiliate, Toro Warranty Company, pursuant to an agreement between them, jointly promises to the original purchaser* to repair any Toro Product used for normal residential purposes* if defective in materials or workmanship. The following time periods apply from the date of original purchase:

Products	Warranty Period
Walk Power Mowers	2-year limited warranty
Rear Engine Riders	2-year limited warranty
Lawn & Garden Tractors	2-year limited warranty
Electric Hand Held Products	2-year limited warranty
Snowthrowers	2-year limited warranty
Consumer Zero Turn	2-year limited warranty

* "Original purchaser" means use the person who originally purchased Toro products.

* "Normal residential purposes"means use of the product on the same lot as your home. Use at more than one location is considered commercial use, and the commercial use warranty would apply.

Limited Warranty for Commercial Use

Toro Consumer Products and attachments used for commercial, institutional, or rental use are warranted against defects in materials or workmanship for the following time periods from the date of original purchase:

Products	Warranty Period
Walk Power Mowers	90 day warranty
Rear Engine Riders	90 day warranty
Lawn & Garden Tractors	90 day warranty
Electric Hand Held Products	90 day warranty
Snowthrowers	90 day warranty
Consumer Zero Turn	45 day warranty

Instructions for Obtaining Warranty Service

If you think that your Toro Product contains a defect in materials or workmanship, follow this procedure:

1. Contact your seller to arrange service of the product. If for any reason it is impossible for you to contact your seller, you may contact any Toro Authorized Distributor to arrange service.
2. Bring the product and your proof of purchase (sales receipt) to your seller or the Service Dealer.

If for any reason you are dissatisfied with the Service Dealer's analysis or with the assistance provided, contact the Toro importer or contact us at:

Customer Care Department, Consumer Division
Toro Warranty Company
8111 Lyndale Avenue South
Bloomington, MN 55420-1196
Manager: Technical Product Support: 001-952-887-8248

See attached Distributor List

Owner Responsibilities

You must maintain your Toro Product by following the maintenance procedures described in the operator's manual. Such routine maintenance, whether performed by a dealer or by you, is at your expense.

Items and Conditions Not Covered

This express warranty does not cover:

- Cost of regular maintenance service or parts, such as filters, fuel, lubricants, tune-up parts, blade sharpening, brake and clutch adjustments.
- Any product or part which has been altered or misused or required replacement or repair due to normal wear, accidents, or lack of proper maintenance.
- Repairs necessary due to improper fuel, contaminants in the fuel system, or failure to properly prepare the fuel system prior to any period of non-use over three months.
- Engine and transmission. These are covered by the appropriate manufacturer's guarantees with separate terms and conditions.

All repairs covered by this warranty must be performed by an Authorized Toro Service Dealer using Toro approved replacement parts.

General Conditions

The purchaser is covered by the national laws of each country. The rights to which the purchaser is entitled with the support of these laws are not restricted by this warranty.