FORM NO. 3317–273

TORO®

MODEL NO. 93–3638

PARTS CATALOG

CANOPY

RM223D, RM5100D & RM5300D TRACTION UNITS

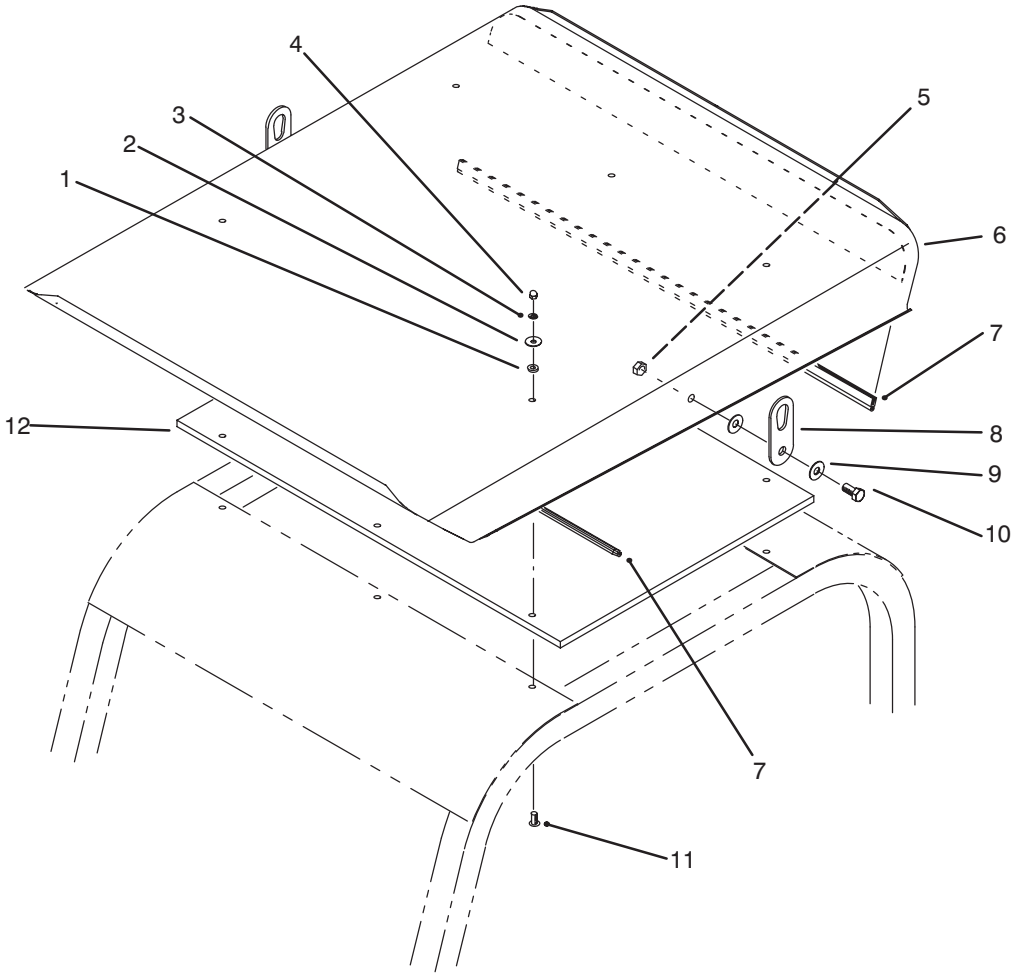

T–1945

CANOPY ASSEMBLY

Ref. No.	Part No.	Description	No. Used
1	83–7420	Washer – Rubber	6
2	3256–22	Washer – Flat	6
3	3253–3	Washer – Lock	6
4	32111–7	Nut – Cap	6
5	3296–39	Nut – Lock	2
6	83–7370	W.A. – Canopy	1

Ref. No.	Part No.	Description	No. Used
7	83–7390	Seal – Clip On	2
8	83–7400	Ear – Lifting	2
9	3256–24	Washer – Flat	4
10	323–6	Screw – Cap Hex. Hd.	2
11	3250–45	Screw – Cap Pan Hd.	6
12	83–7380	Insulation – Canopy	

Copyright 1994 The Toro Company
All Rights Reserved