Form No. 3354-251 Rev C

Front Lift Frame

Sand/Infield Pro® 5040 Traction Unit

Model No. 08712—Serial No. 260000001 and Up

Installation Instructions

Note: Determine the left and right sides of the machine from the normal operating position.

Loose Parts

Use the chart below to verify that all parts have been shipped.

Procedure	Description	Qty.	Use
1	No parts required	–	Remove the shrouds.
2	Straight hydraulic fitting with O-ring 90 degree Hydraulic fitting with O-ring Lift valve Valve plate Bolt, 1/4 x 3 inches Locknut, 1/4 inch Bolts, #10 x 1-1/4 inches Locknuts Lift lever	2 2 1 1 3 3 2 2 1	Install the lift valve.
3	Right hand plow plate Left hand plow plate Bolt, 1/2 x 2 inches Locknut, 1/2 inch Hitch frame bracket Bolt, 1/2 x 1-3/4 inches	1 1 4 4 1 2	Install the plow plates.
4	Hitch frame Bolt, 3/8 x 2 inches Nut, 3/8 inch Capscrew, 3/8 x 1-1/2 inches Locknut, 3/8 inch Cylinder pin Adapter plate Push arm tube Pin assembly Thread forming screw Bolt, 5/8 x 1-1/2 inches Washer, 1.68 O.D. x .65 I.D Tube Clevis pin Cotter pin	1 2 2 2 2 2 1 1 2 2 2 2 1 1 1	Install the push arms and hitch frame.
5	45 degree Hydraulic fitting with O-ring Hydraulic cylinder 90 degree Hydraulic fitting with O-ring Small retaining ring Pin Large retaining ring	1 1 1 1 1 2	Install the hydraulic cylinder.

© 2007—The Toro® Company
8111 Lyndale Avenue South
Bloomington, MN 55420

Register at www.Toro.com.

Original Instructions (EN)
Printed in the USA.
All Rights Reserved

Procedure	Description	Qty.	Use
6	Tube assembly Hydraulic hose Hydraulic hose Hydraulic hose Wire hose holder Thread forming screw, 5/16 x 3/4 inches Plastic cable tie	1 1 1 1 1 2 3	Install the hydraulic hoses.
7	Lever guide plate Flange head screw Washer Control panel decal Control panel Knob Plastic cable tie	1 2 2 1 1 1 3	Installing the control panel and lever guide plate.
8	Installation Instructions Parts Catalog	1 1	Read the documentation and store it in a safe location.

1

Removing the Shrouds

No Parts Required

Procedure

1. Jack up the rear of the machine and position blocks under the rear wheel motor mounts. Remove the right rear tire.
2. Remove the 4 washers and bolts mounting the control panel to the console (Figure 1). Unplug the wire from the hour meter. Remove the control panel (Fig. 1).
3. Remove the 3 bolts securing the console to the frame (Figure 1). Remove the console by gently lifting the bottom edge of the console around the support bracket and sliding it up beyond the brake handle.

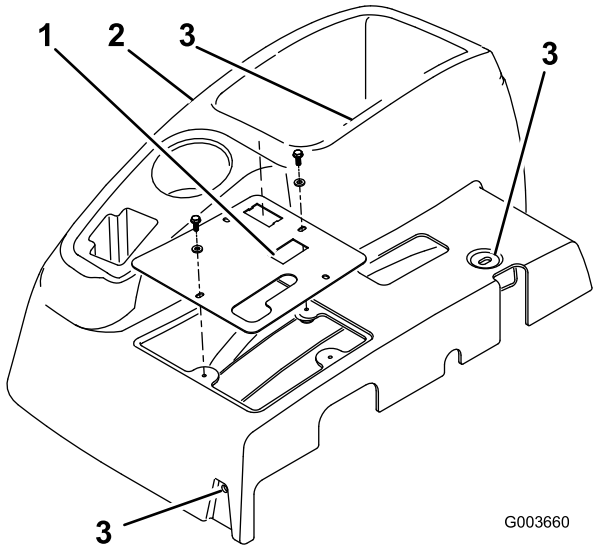

Figure 1

1. Control panel
2. Console
3. Console mounting bolt locations

4. Remove the 4 bolts securing the right hand wheel shroud to the frame and remove the shroud (Figure 2).

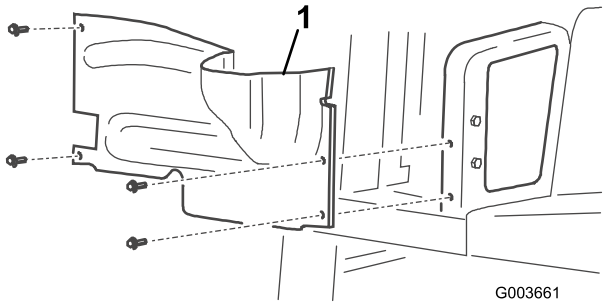

Figure 2

1. Right hand wheel shroud

5. Disconnect and remove the center shroud from the frame (Figure 3).

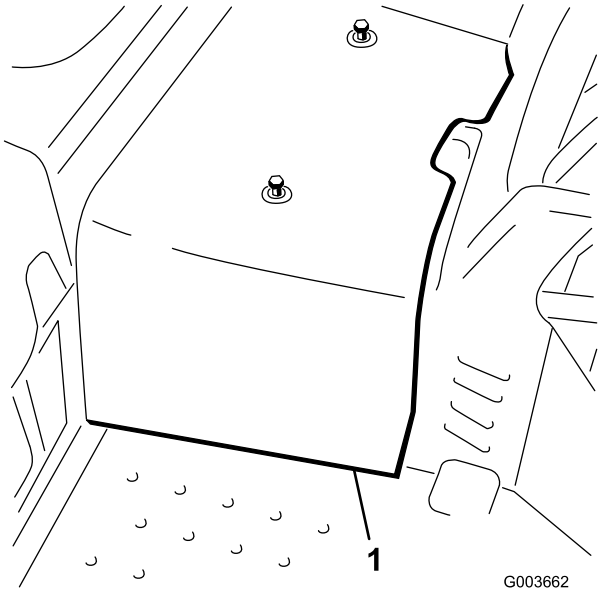

Figure 3

1. Center shroud

2

Installing the Lift Valve

Parts needed for this procedure:

2	Straight hydraulic fitting with O-ring
2	90 degree Hydraulic fitting with O-ring
1	Lift valve
1	Valve plate
3	Bolt, 1/4 x 3 inches
3	Locknut, 1/4 inch
2	Bolts, #10 x 1-1/4 inches
2	Locknuts
1	Lift lever

Procedure

1. Thread the 2 straight hydraulic fittings and the two 90 degree fittings into the new lift valve. Position the fittings as shown in Figure 4. Do not tighten the 90 degree fittings at this time.

   Note: Make sure all O-rings are lubricated and properly positioned on fittings before installation.

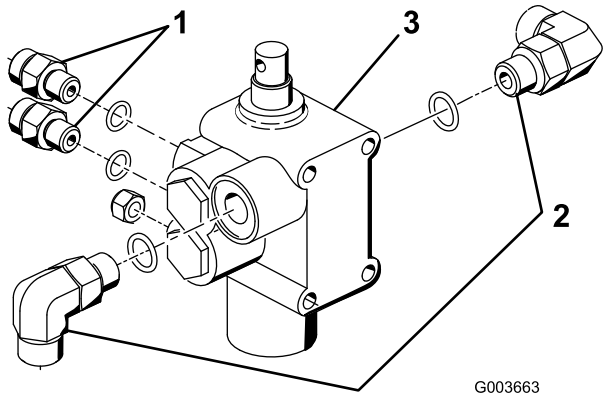

Figure 4

1. Straight fitting
2. 90 degree fitting
3. Lift valve

2. Mount the valve assembly, pivot bracket and valve plate to the frame with 3 bolts (1/4 x 3 inches) and 3 locknuts (Figure 5). Position the valve plate against the front of the frame member when mounting. Torque to 90-110 in-lb.

   Note: The valve installation is very similar to the vale currently installed.

3. Loosely mount the pivot lever assembly to the valve spool and to the offset link with 2 bolts (#10 x 1-1/4 inch) and 2 locknuts (Figure 5). Do not tighten at this time.

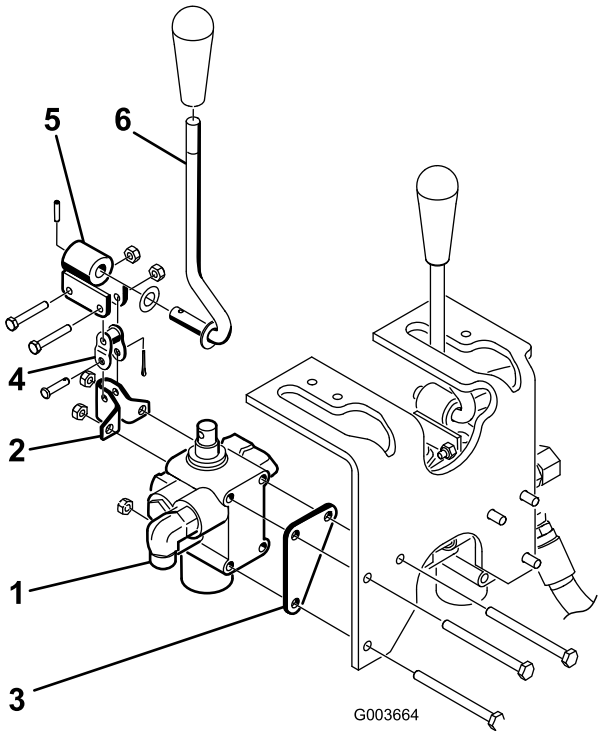

Figure 5

1. Valve assembly
2. Pivot bracket
3. Valve plate
4. Offset link
5. Pivot
6. Lever

3

Installing the Plow Plates

Parts needed for this procedure:

1	Right hand plow plate
1	Left hand plow plate
4	Bolt, 1/2 x 2 inches
4	Locknut, 1/2 inch
1	Hitch frame bracket
2	Bolt, 1/2 x 1-3/4 inches

Procedure

1. Loosely mount the right hand plow plate to the right side of the castor fork with 2 bolts (1/2 x 2 inches)

and locknuts as shown in Figure 6. Do not tighten the fasteners.

2. Repeat the procedure with the left hand plow plate (Figure 6).
3. Jack up the front of the machine until the front wheel is off the floor.
4. Remove and discard the 2 bolts securing the front of the steering pivot to the top of the castor fork (Figure 6).
5. Using the castor fork and steering pivot mounting holes, mount the hitch frame bracket to the underside of the castor fork with 2 bolts (1/2 x 1-3/4 inches) (Figure 6). It may be required to partially deflate the tire to gain clearance.

   Note: The wheel motor hydraulic hose should not rest on top of the hitch frame bracket.

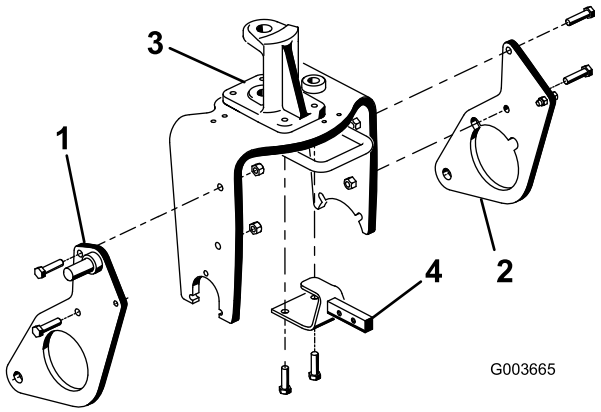

Figure 6

1. Right hand plow plate
2. Left hand plow plate
3. Steering pivot
4. Hitch frame bracket

4

Installing the Push Arms and Hitch Frame

Parts needed for this procedure:

1	Hitch frame
2	Bolt, 3/8 x 2 inches
2	Nut, 3/8 inch
2	Capscrew, 3/8 x 1-1/2 inches
2	Locknut, 3/8 inch
2	Cylinder pin
1	Adapter plate
1	Push arm tube
2	Pin assembly
2	Thread forming screw
2	Bolt, 5/8 x 1-1/2 inches
2	Washer, 1.68 O.D. x .65 I.D
1	Tube
1	Clevis pin
1	Cotter pin

Procedure

1. Lower the machine so the front wheel is on the floor.
2. Secure the push arm tube to the adapter plate with 2 pin assemblies. Secure the pin assemblies to the adapter plates with 2 thread forming screws. Position the components as shown in Figure 7.

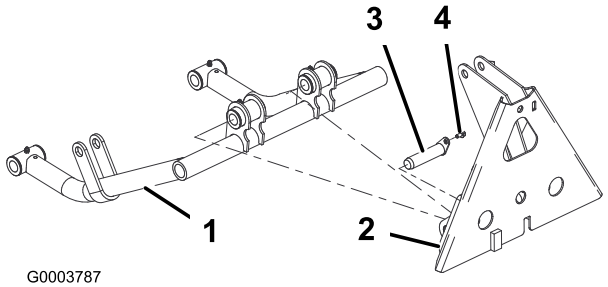

Figure 7

1. Push arm tube
2. Adapter plate
3. Pin assembly
4. Thread forming screw

3. Insert a cylinder pin into each push arm tube as shown in Figure 8.

4. Insert the push arm tubes onto the right and left plow plates aligning the cylinder pin guides with the holes in the plow plates (Figure 8).

   Note: If unable to get the push arm tubes around the plow plates, loosen the nuts securing the plow plates to the castor fork.

5. Mount each cylinder pin to each plow plate with a bolt (5/8 x 1-1/2 inches) and a washer (1.68 O.D. x .65 I.D.) as shown in Figure 8. Torque the bolts to 150 ft-lb.

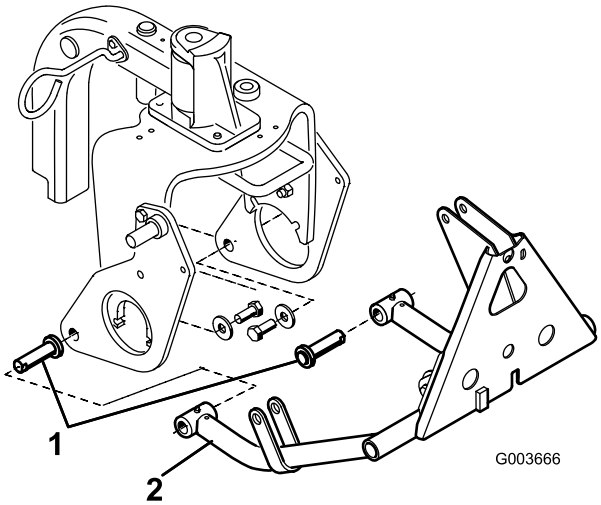

Figure 8

1. Cylinder pin
2. Push arm tube

6. Mount the top of the hitch frame to the hitch frame bracket with 2 bolts (3/8 x 2 inches) and nuts (Figure 9).
7. Mount the hitch frame tubes to the plow plates with bolts (3/8 x 1-1/2 inches) and nuts (Figure 9). Tighten the fasteners.

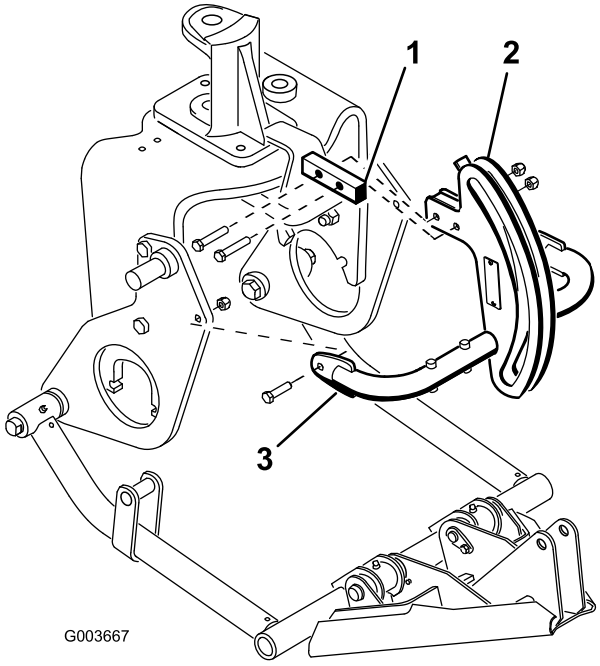

Figure 9

1. Hitch frame bracket
2. Hitch frame
3. Hitch frame tube

8. Secure the frame adapter to the hitch frame with a tube, clevis pin and cotter pin (Figure 10).

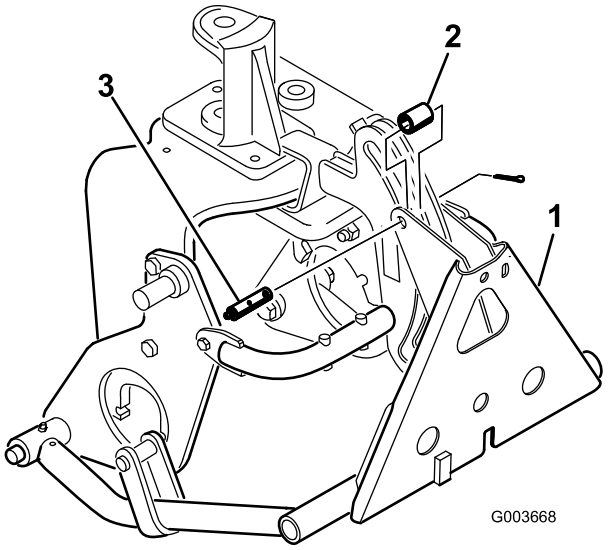

Figure 10

1. Frame adapter
2. Tube
3. Clevis pin with grease fitting

5

Installing the Hydraulic Cylinder

Parts needed for this procedure:

1	45 degree Hydraulic fitting with O-ring
1	Hydraulic cylinder
1	90 degree Hydraulic fitting with O-ring
1	Small retaining ring
1	Pin
2	Large retaining ring

Procedure

1. Thread a 90 degree fitting into the upper port in the hydraulic cylinder. Position the fitting as shown in Figure 11. Note: Make sure all O-rings are lubricated and properly positioned on fittings before installation.

   Note: To prevent contamination to the hydraulic fittings or hoses, do not remove the caps from the fittings or hoses until they are installed.

2. Thread a 45 degree fitting into the lower port in the hydraulic cylinder. Position the fitting as shown in Figure 11.

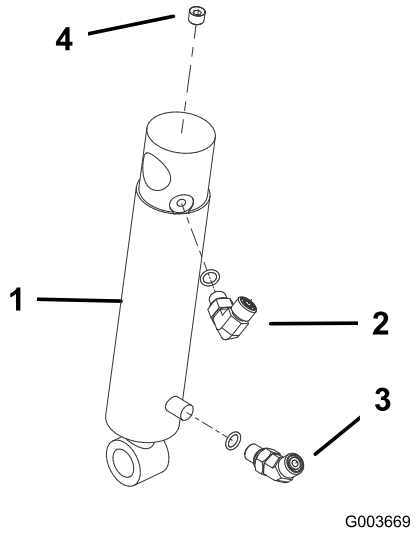

Figure 11

1. Hydraulic cylinder
2. 90 degree fitting
3. 45 degree fitting
4. Plug (1/8 inch)

3. Mount the top of the hydraulic cylinder barrel to the pin on the right hand. plow plate with a retaining ring (Figure 12). The cylinder hydraulic ports are to be positioned forward.
4. Mount the cylinder rod to the push arm straps with a pin and 2 retaining rings (Figure 12).

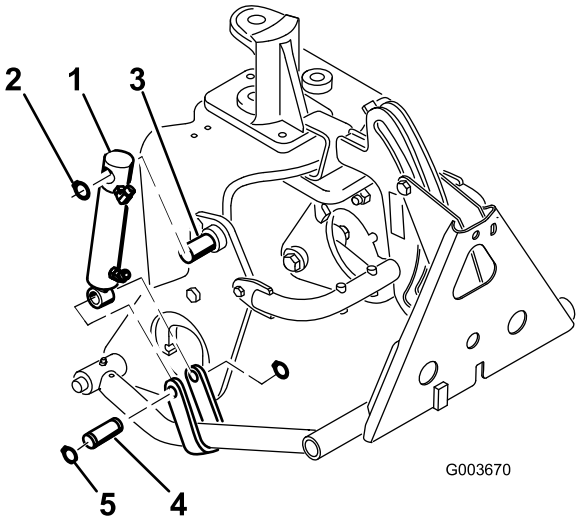

Figure 12

1. Hydraulic cylinder
2. Retaining ring
3. Pin
4. Push arm strap
5. Pin and retaining rings

6

Installing the Hydraulic Hoses

Parts needed for this procedure:

1	Tube assembly
1	Hydraulic hose
1	Hydraulic hose
1	Hydraulic hose
1	Wire hose holder
2	Thread forming screw, 5/16 x 3/4 inches
3	Plastic cable tie

Procedure

1. Locate the hydraulic tube that goes from the oil cooler to the existing lift valve (Figure 13). Remove the fasteners and tube clamp securing the hydraulic tubes to the frame.
2. Disconnect and remove the hydraulic tube from the oil cooler and the lift valve (Figure 13).

   Note: To minimize oil loss when removing the hydraulic tube, have the replacement hose ready

or cap the fitting on the cooler using one of the protective shipping caps removed from the tube assembly, part no. 108–8447 (Figure 14).

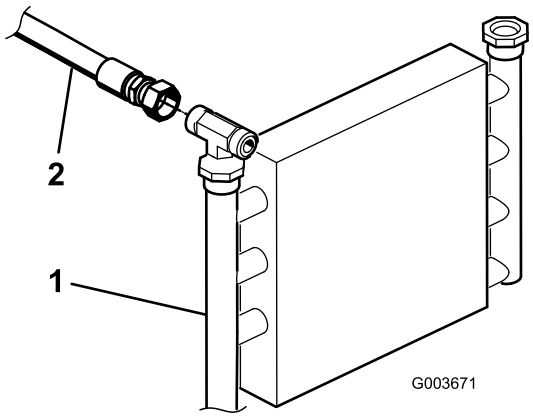

Figure 13

1. Oil cooler
2. Hydraulic tube

3. Secure the remaining hydraulic tube to the frame with the clamp and fasteners previously removed
4. Connect the tube assembly, part no. 108-8447, to the 90 degree fitting on the left side of the new valve and the vacated fitting on the existing lift valve (Figure 14).
5. Connect the 45 degree fitting end of hydraulic hose, part no. 108-8449, to the 90 degree fitting on the right side of the valve and the straight end of the hose to the vacant oil cooler fitting (Figure 14). Refer to Figure 15 and Figure 16 for hose routing.
6. Mount the wire hose holder to the left frame tube with 2 thread forming screws (5/16 x 3/4 inch) (Figure 14).
7. Connect the short 90 degree fitting end of hydraulic hose, part no. 108-8453, to the top straight fitting on the rear of the valve. Route the hose through the wire hose holder and connect the straight end of the hose to the top hydraulic cylinder fitting (Figure 14). Refer to Figure 15 and Figure 16 for hose routing.
8. Connect the long 90 degree fitting end of hydraulic hose, part no. 108-8454, to the bottom straight fitting on the rear of the valve. Route the hose through the wire hose holder and connect the straight end of the hose to the bottom hydraulic cylinder fitting (Figure 14). Refer to Figure 15 and Figure 16 for hose routing. Make sure hoses are routed away from any sharp, hot or moving components.
9. Tighten all fasteners and fittings.
10. Using cable ties, secure the hoses to the machine, at the locations shown in Figure 15 and Figure 16.

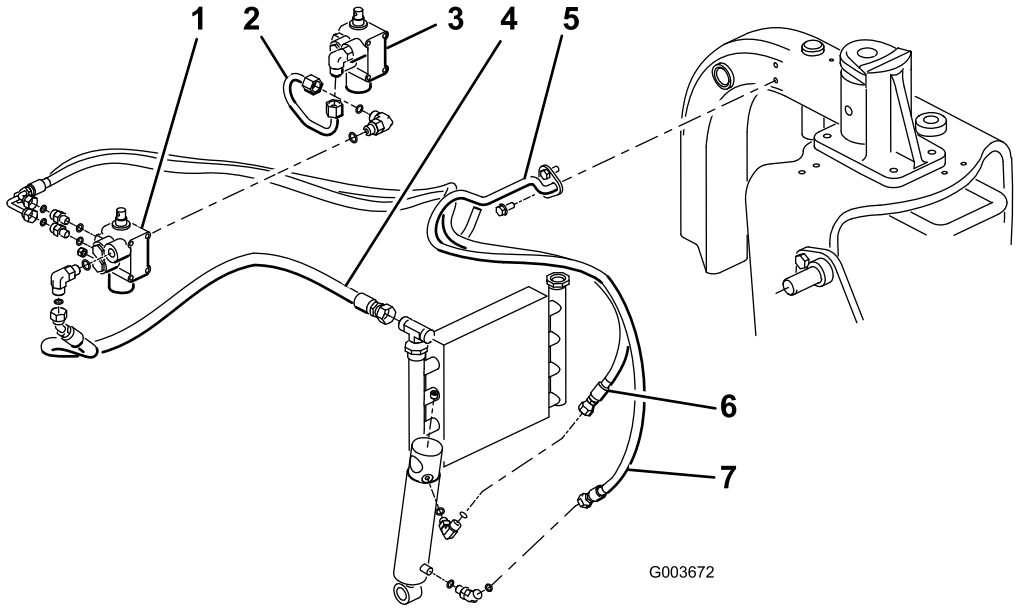

Figure 14

1. New valve
2. Tube assembly, part no. 108-8447
3. Existing valve
4. Hydraulic hose, part no. 108-8449
5. Wire hose holder
6. Hydraulic hose, part no. 108-8453
7. Hydraulic hose, part no. 108-8454

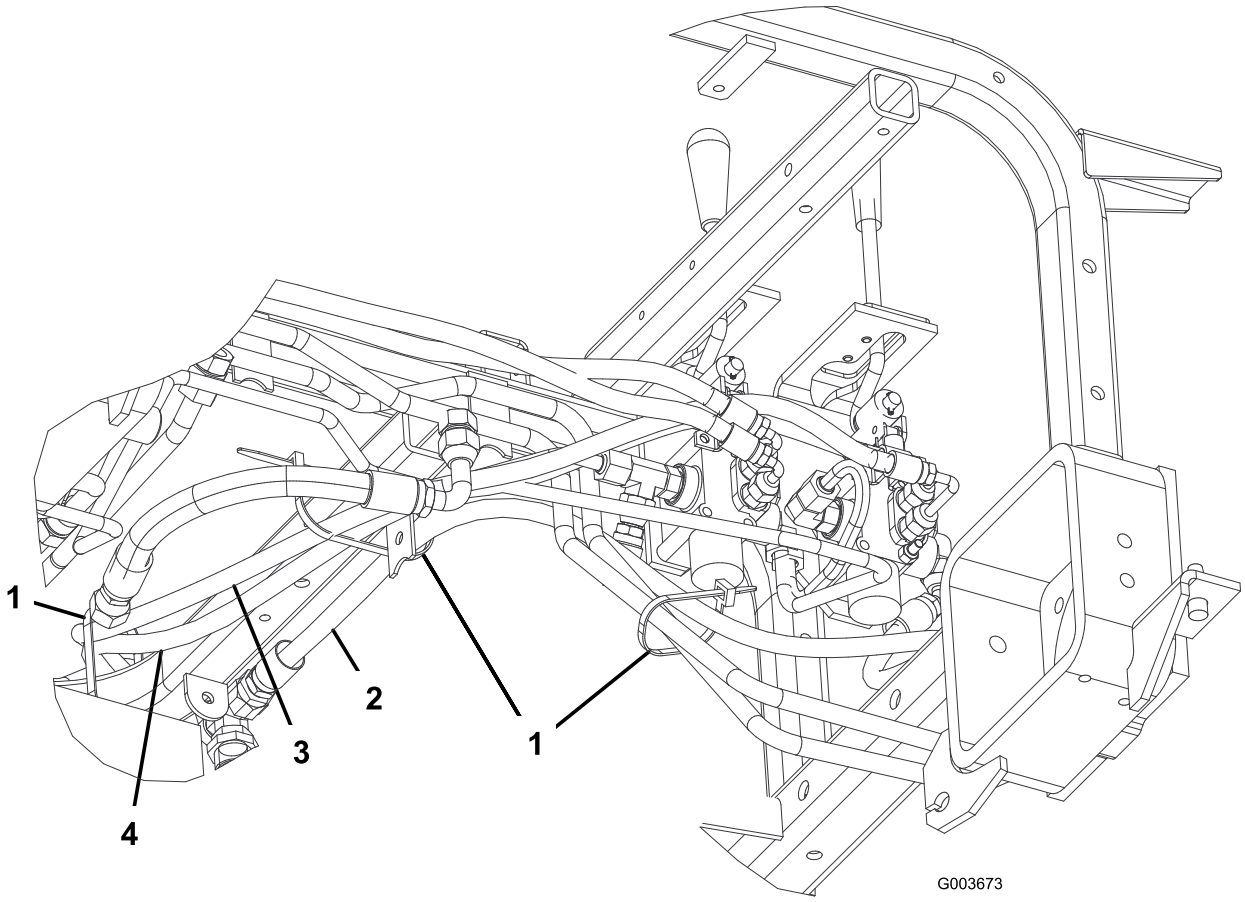

Figure 15

1. Cable tie
2. Hydraulic hose, part no. 108-8449
3. Hydraulic hose, part no. 108-8453
4. Hydraulic hose, part no. 108-8454

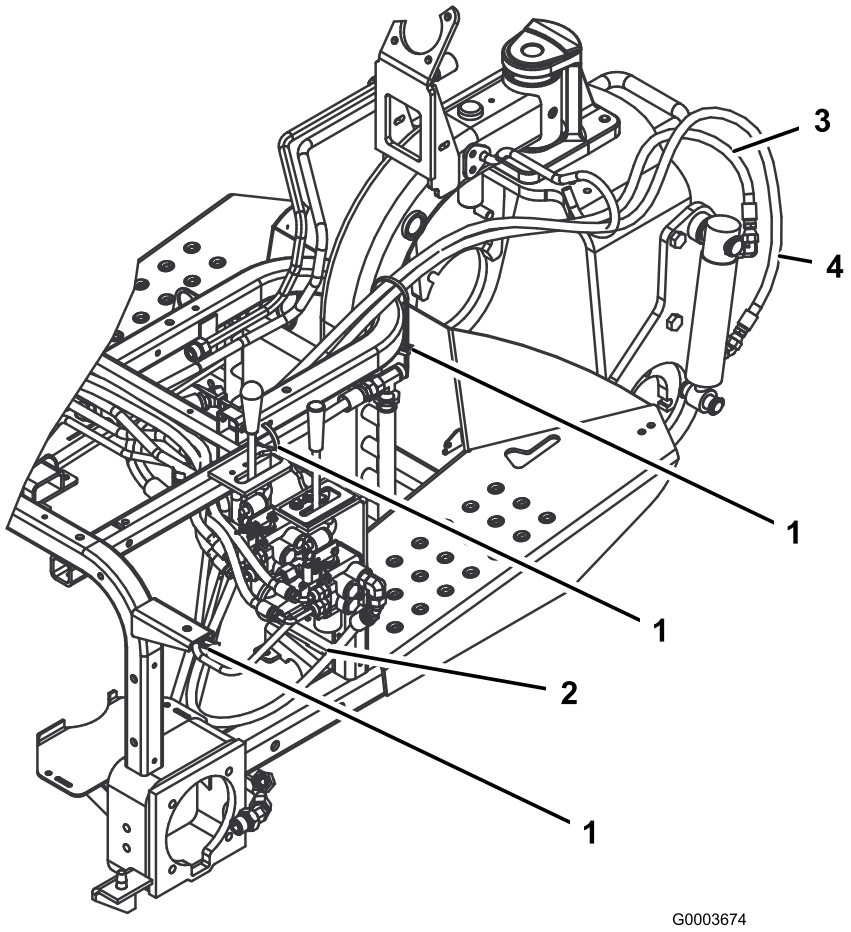

Figure 16

1. Cable tie
2. Hydraulic hose, part no. 108-8449
3. Hydraulic hose, part no. 108-8453
4. Hydraulic hose, part no. 108-8454

7

Installing the Control Panel and Lever Guide Plate

Parts needed for this procedure:

1	Lever guide plate
2	Flange head screw
2	Washer
1	Control panel decal
1	Control panel
1	Knob
3	Plastic cable tie

Procedure

1. Insert the lever guide plate over the lift lever and loosely secure it to the frame with 2 flange head screws and washers (Figure 17).

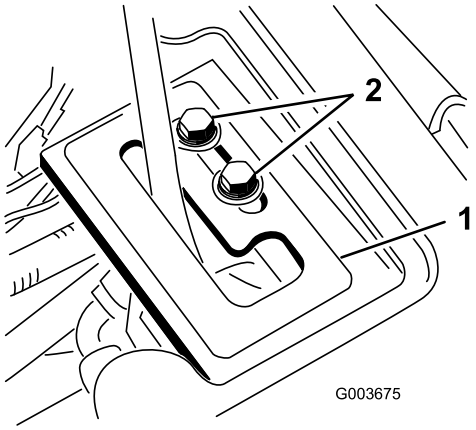

Figure 17

1. Lever guide plate 2. Mounting screws

2. Check the hydraulic fluid level and replenish as required.

Hydraulic fluid escaping under pressure can penetrate skin and cause injury.

- **If hydraulic fluid is injected into the skin it must be surgically removed within a few hours by a doctor familiar with this type of injury. Gangrene may result if this is not done.**
- **Keep body and hands away from pin hole leaks or nozzles that eject high pressure hydraulic fluid.**
- **Use cardboard or paper to find hydraulic leaks.**
- **Safely relieve all pressure in the hydraulic system before performing any work on the hydraulic system.**
- **Make sure all hydraulic fluid hoses and lines are in good condition and all hydraulic connections and fittings are tight before applying pressure to hydraulic system.**

3. Start the traction unit engine and check the fitting connections.
4. Reinstall the wheel shroud, center shroud and the console. Do not install the control panel at this time. Make sure the shrouds do the interfere with the hoses. Route the hoses as required. Reverse the shroud installation procedure used in Step #1.
5. Install the rear tire and remove the blocks from under the rear of the machine. Torque the lugs nuts to 45-55 ft-lb (61-75 N·m).

The engine must be running so that the final adjustment of the lift lever detent plate can be performed. Contact with moving parts or hot surfaces may cause personal injury.

Keep hands, feet, face, and other body parts away from rotating parts, the muffler, and other hot surfaces.

6. With the engine running and lift lever in the **Float** position, slide the lever guide plate until the lift cylinder can be extended and retracted by hand (Figure 17).
7. Tighten both lift lever guide plate mounting screws to secure the adjustment (Figure 17).

8. Remove the hour meter from the old control panel and install in the new control panel.
9. Install the new control panel and plug the wire into the hour meter.
10. Secure the control panel in place with the fasteners previously removed (Figure 18).

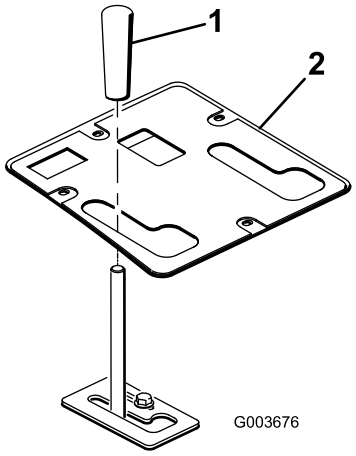

Figure 18

1. Control panel
2. Knob

11. Install the knob onto the lift lever (Figure 18).
12. Grease the front lift frame. Refer to Lubrication.
13. Check the hydraulic fluid level and replenish as required.

8

Reading/Storing the Documentation

Parts needed for this procedure:

1	*Installation Instructions*
1	*Parts Catalog*

Procedure

1. Read the documentation.
2. Store the documentation in a safe place.

Operation

- The front lift frame is designed to only accept certain attachments. Do not try to install a rear mount attachment to the front lift frame as damage to the machine may occur.
- To lower the front lift frame, push the lift lever forward.
- To allow the front lift frame to float, push the lift lever forward and to the side into the detent.
- To raise the front lift frame, pull the lift lever rearward.
- Become familiar with the safe operation of the equipment, with the operator controls, and safety signs.
- Keep hands and feet away from moving parts or hot surfaces.

Maintenance

Greasing the Lift Frame

The front lift frame has 5 grease fittings (Figure 19) that must be lubricated regularly with No. 2 General Purpose Lithium Base Grease. If machine is operated under normal conditions, lubricate all bearings and bushings after every 100 hours of operation. Lubricate the bearings and bushings immediately **after every** washing, regardless of the interval listed.

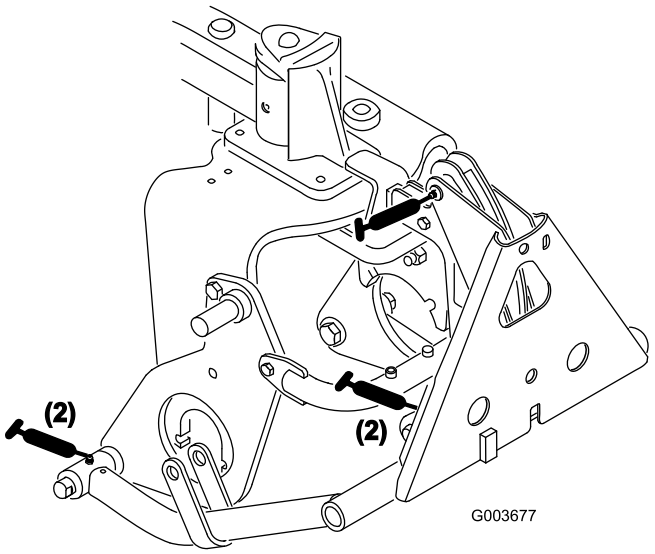

Figure 19

Schematics

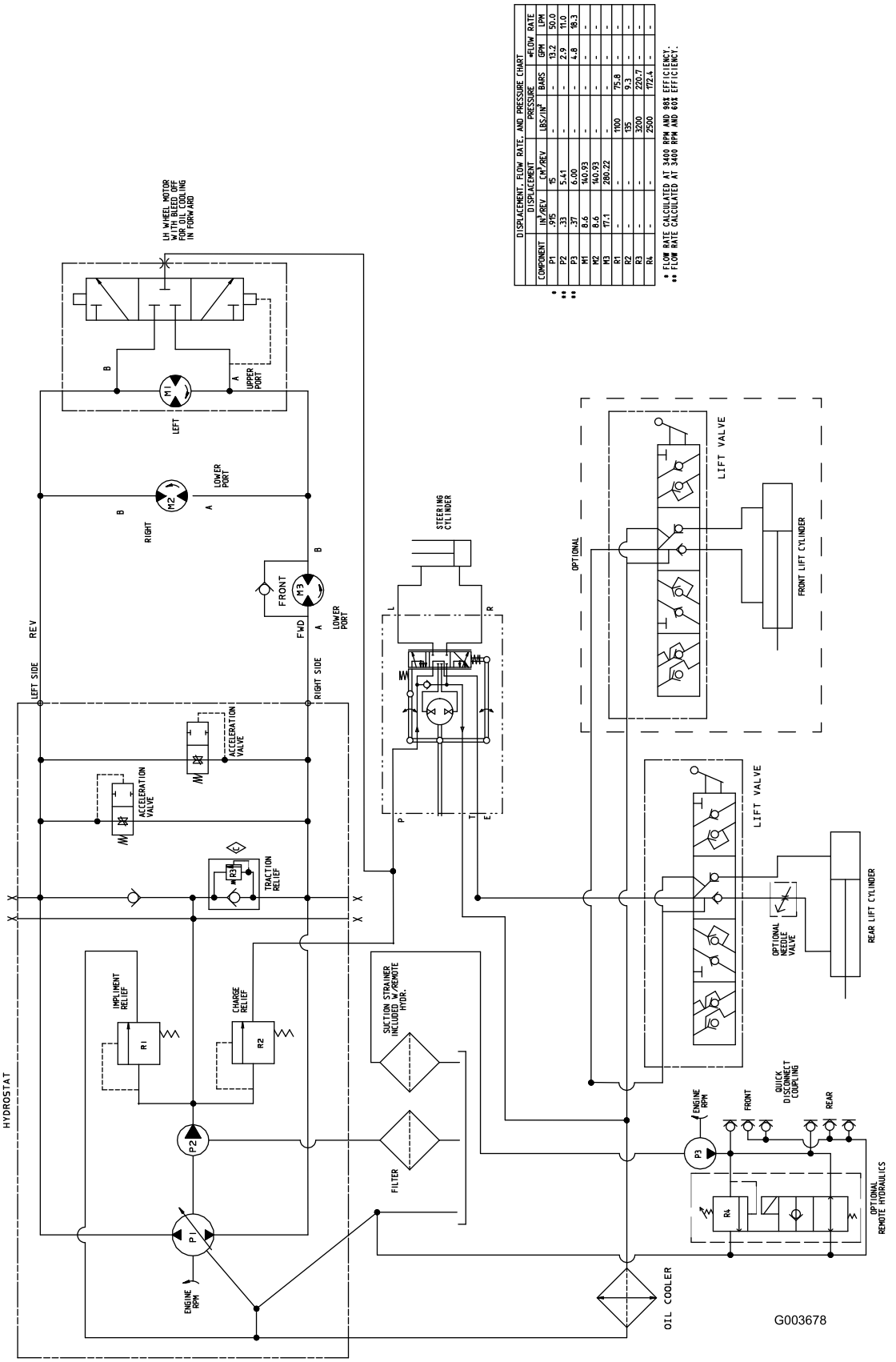

Hydraulic Schematic (Rev. A)

The Toro General Commercial Products Warranty

A Two-Year Limited Warranty

Conditions and Products Covered

The Toro Company and its affiliate, Toro Warranty Company, pursuant to an agreement between them, jointly warrant your Toro Commercial Product ("Product") to be free from defects in materials or workmanship for two years or 1500 operational hours*, whichever occurs first. Where a warrantable condition exists, we will repair the Product at no cost to you including diagnosis, labor, parts, and transportation. This warranty begins on the date the Product is delivered to the original retail purchaser.

* Product equipped with hour meter

Instructions for Obtaining Warranty Service

You are responsible for notifying the Commercial Products Distributor or Authorized Commercial Products Dealer from whom you purchased the Product as soon as you believe a warrantable condition exists.

If you need help locating a Commercial Products Distributor or Authorized Dealer, or if you have questions regarding your warranty rights or responsibilities, you may contact us at:

Toro Commercial Products Service Department
Toro Warranty Company
8111 Lyndale Avenue South
Bloomington, MN 55420-1196
952-888-8801 or 800-982-2740
E-mail: commercial.service@toro.com

Owner Responsibilities

As the Product owner, you are responsible for required maintenance and adjustments stated in your operator's manual. Failure to perform required maintenance and adjustments can be grounds for disallowing a warranty claim.

Items and Conditions Not Covered

Not all product failures or malfunctions that occur during the warranty period are defects in materials or workmanship. This express warranty does not cover the following:

- Product failures which result from the use of non-Toro replacement parts, or from installation and use of add-on, modified, or unapproved accessories
- Product failures which result from failure to perform required maintenance and/or adjustments
- Product failures which result from operating the Product in an abusive, negligent or reckless manner
- Parts subject to consumption through use unless found to be defective. Examples of parts which are consumed, or used up, during normal Product operation include, but are not limited to, blades, reels, bedknives, tines, spark plugs, castor wheels, tires, filters, belts, and certain sprayer components such as diaphragms, nozzles, and check valves, etc.
- Failures caused by outside influence. Items considered to be outside influence include, but are not limited to, weather, storage practices, contamination, use of unapproved coolants, lubricants, additives, or chemicals, etc.
- Normal "wear and tear" items. Normal "wear and tear" includes, but is not limited to, damage to seats due to wear or abrasion, worn painted surfaces, scratched decals or windows, etc.

Parts

Parts scheduled for replacement as required maintenance are warranted for the period of time up to the scheduled replacement time for that part.

Parts replaced under this warranty become the property of Toro. Toro will make the final decision whether to repair any existing part or assembly or replace it. Toro may use factory remanufactured parts rather than new parts for some warranty repairs.

General Conditions

Repair by an Authorized Toro Distributor or Dealer is your sole remedy under this warranty.

Neither The Toro Company nor Toro Warranty Company is liable for indirect, incidental or consequential damages in connection with the use of the Toro Products covered by this warranty, including any cost or expense of providing substitute equipment or service during reasonable periods of malfunction or non-use pending completion of repairs under this warranty. Except for the Emissions warranty referenced below, if applicable, there is no other express warranty. All implied warranties of merchantability and fitness for use are limited to the duration of this express warranty.

Some states do not allow exclusions of incidental or consequential damages, or limitations on how long an implied warranty lasts, so the above exclusions and limitations may not apply to you.

This warranty gives you specific legal rights, and you may also have other rights which vary from state to state.

Note regarding engine warranty: The Emissions Control System on your Product may be covered by a separate warranty meeting requirements established by the U.S. Environmental Protection Agency (EPA) and/or the California Air Resources Board (CARB). The hour limitations set forth above do not apply to the Emissions Control System Warranty. Refer to the Engine Emission Control Warranty Statement printed in your operator's manual or contained in the engine manufacturer's documentation for details.

Countries Other than the United States or Canada

Customers who have purchased Toro products exported from the United States or Canada should contact their Toro Distributor (Dealer) to obtain guarantee policies for your country, province, or state. If for any reason you are dissatisfied with your Distributor's service or have difficulty obtaining guarantee information, contact the Toro importer. If all other remedies fail, you may contact us at Toro Warranty Company.

Part No. 374-0031 Rev. C