Form No. 3359-125 Rev B

TORO®

Count on it.

Operator's Manual

Z580-D Z Master® with 52in or 60in TURBO FORCE® Side Discharge Mower

Model No. 74264TE—Serial No. 280000001 and Up

Model No. 74265TE—Serial No. 280000001 and Up

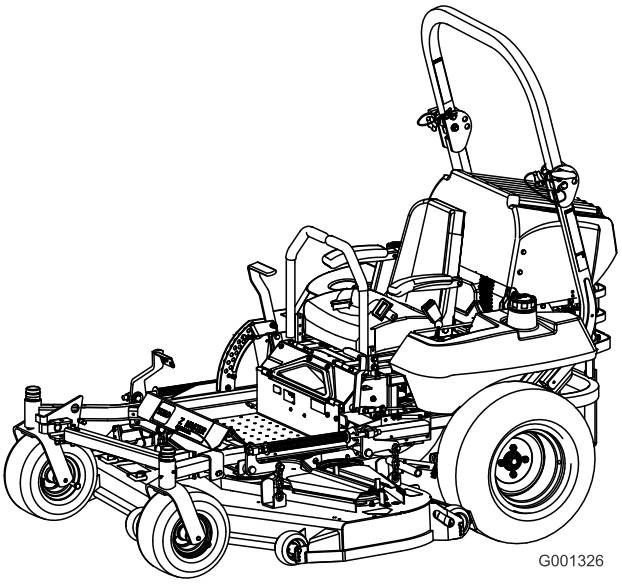

CE

Register at www.Toro.com.

Original Instructions (EN)

Introduction

Read this information carefully to learn how to operate and maintain your product properly and to avoid injury and product damage. You are responsible for operating the product properly and safely.

You may contact Toro directly at www.Toro.com for product and accessory information, help finding a dealer, or to register your product.

Whenever you need service, genuine Toro parts, or additional information, contact an Authorized Service Dealer or Toro Customer Service and have the model and serial numbers of your product ready. Figure 1 identifies the location of the model and serial numbers on the product. Write the numbers in the space provided.

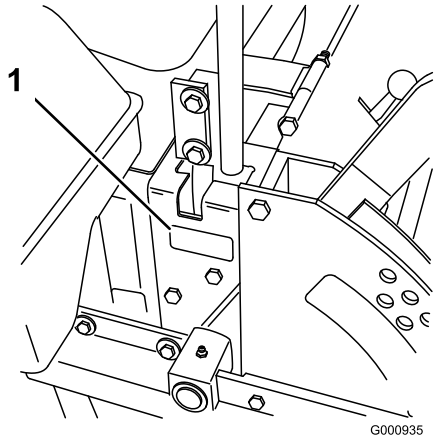

Figure 1

1. Model and serial number location

Model No. _____

Serial No. _____

This manual identifies potential hazards and has safety messages identified by the safety alert symbol (Figure 2), which signals a hazard that may cause serious injury or death if you do not follow the recommended precautions.



Figure 2

1. Safety alert symbol

This manual uses 2 other words to highlight information. **Important** calls attention to special mechanical information and **Note** emphasizes general information worthy of special attention.

Contents

Introduction 2
Safety 3
- Safe Operating Practices 3
- Toro Riding Mower Safety 5
- Sound Pressure 5
- Sound Power 5
- Vibration 5
- Slope Chart 6
- Safety and Instructional Decals 7

Product Overview 13
- Controls 13

Operation 14
- Adding Fuel 14
- Biodiesel Ready 15
- Filling the Fuel Tank 15
- Checking the Engine Oil Level 15
- Switching the Fuel Tanks 15
- Using the Rollover Protection System (ROPS) 16
- Think Safety First 17
- Operating the Parking Brake 18
- Starting and Stopping the Engine 18
- Operating the Power Take Off (PTO) 20
- The Safety Interlock System 20
- Driving Forward or Backward 21
- Stopping the Machine 22
- Adjusting the Height-of-Cut 22
- Adjusting the Anti-Scalp Rollers 22
- Adjusting the Flow Baffle 23
- Positioning the Flow Baffle 23
- Positioning the Seat 24
- Unlatching the Seat 25
- Pushing the Machine by Hand 25
- Using the Side Discharge 25
- Transporting Machines 26
- Loading Machines 26
- Operating Tips 27

Maintenance 29
- Recommended Maintenance Schedule(s) 29
- Lubrication 30
  - Greasing and Lubrication 30
  - Greasing the Mower Deck and Belt Idlers 31
- Engine Maintenance 32
  - Servicing the Air Cleaner 32

© 2007—The Toro® Company
8111 Lyndale Avenue South
Bloomington, MN 55420

Contact us at www.Toro.com.
Printed in the USA.
All Rights Reserved

Servicing the Engine Oil 33
Fuel System Maintenance 36
Servicing the Fuel Filter 36
Servicing the Fuel Tank 36
Electrical System Maintenance 37
Servicing the Battery 37
Servicing the Fuses 38
Drive System Maintenance 39
Adjusting the Tracking 39
Checking the Tire Pressure 40
Checking the Wheel Hub Slotted Nut 40
Adjusting the Caster Pivot Bearing 40
Servicing the Gear Box 41
Adjusting the Electric Clutch 41
Cooling System Maintenance 43
Servicing the Cooling System 43
Brake Maintenance 44
Adjusting the Parking Brake 44
Belt Maintenance 45
Inspecting the Belts 45
Replacing the Mower Belt 45
Replacing the PTO Drive Belt 45
Replacing the Pump Drive Belt 46
Replacing and Tensioning the Alternator Belt 46
Controls System Maintenance 48
Adjusting the Control Handle Neutral Position 48
Hydraulic System Maintenance 49
Servicing the Hydraulic System 49
Setting the Hydraulic Pump Neutral Position 51
Mower Deck Maintenance 53
Leveling the Mower at Three Positions 53
Servicing the Cutting Blades 54
Replacing the Grass Deflector 56
Cleaning 57
Cleaning Under the Mower 57
Waste Disposal 57
Storage 58
Cleaning and Storage 58
Troubleshooting 59
Schematics 61

Safety

This machine meets or exceeds European Standards in effect at the time of production. However, improper use or maintenance by the operator or owner can result in injury. To reduce the potential for injury, comply with these safety instructions and always pay attention to the safety alert symbol, which means CAUTION, WARNING, or DANGER-"personal safety instruction." Failure to comply with the instruction may result in personal injury or death.

Safe Operating Practices

The following instructions are from the CEN standard EN 836:1997.

This product is capable of amputating hands and feet and throwing objects. Always follow all safety instructions to avoid serious injury or death.

Training

- Read the instructions carefully. Be familiar with the controls and the proper use of the equipment.
- Never allow children or people unfamiliar with these instructions to use the lawnmower. Local regulations can restrict the age of the operator.
- Never mow while people, especially children, or pets are nearby.
- Keep in mind that the operator or user is responsible for accidents or hazards occurring to other people or their property.
- Do not carry passengers.
- All drivers should seek and obtain professional and practical instruction. Such instruction should emphasize:
  - the need for care and concentration when working with ride-on machines;
  - control of a ride-on machine sliding on a slope will not be regained by the application of the control levers. The main reasons for loss of control are:
    - ◊ insufficient wheel grip, especially on wet grass;
    - ◊ being driven too fast;
    - ◊ inadequate braking;
    - ◊ the type of machine is unsuitable for its task;
    - ◊ lack of awareness of the effect of ground conditions, especially slopes;
    - ◊ incorrect hitching and load distribution.

Preparation

- While mowing, always wear substantial footwear and long trousers. Do not operate the equipment when barefoot or wearing open sandals.
- Thoroughly inspect the area where the equipment is to be used and remove all objects which may be thrown by the machine.
- **Warning**–Fuel is highly flammable.
  - Store fuel in containers specifically designed for this purpose.
  - Refuel outdoors only and do not smoke while refuelling.
  - Add fuel before starting the engine. Never remove the cap of the fuel tank or add fuel while the engine is running or when the engine is hot.
  - If fuel is spilled, do not attempt to start the engine but move the machine away from the area of spillage and avoid creating any source of ignition until fuel vapors have dissipated.
  - Replace all fuel tanks and container caps securely.
- Replace faulty silencers.
- Before using, always visually inspect to see that the blades, blade bolts and cutter assembly are not worn or damaged. Replace worn or damaged blades and bolts in sets to preserve balance.
- On multi-bladed machines, take care as rotating one blade can cause other blades to rotate.

Operation

- Be alert, slow down and use caution when making turns. Look behind and to the side before changing directions.
- Do not operate the engine in a confined space where dangerous carbon monoxide fumes can collect.
- Mow only in daylight or in good artificial light.
- Before attempting to start the engine, disengage all blade attachment clutches and shift into neutral.
- Do not use on slopes greater than 15 degrees.
- Remember there is no such thing as a safe slope. Travel on grass slopes requires particular care. To guard against overturning:
  - - do not stop or start suddenly when on a slope;
  - - use slow speeds on slopes and during tight turns;
  - - stay alert for humps and hollows and other hidden hazards;
- Use care when pulling loads or using heavy equipment.
  - - Use only approved drawbar hitch points.
  - - Limit loads to those you can safely control.
  - - Do not turn sharply. Use care when reversing.
- Watch out for traffic when crossing or near roadways.
- Stop the blades rotating before crossing surfaces other than grass.
- When using any attachments, never direct discharge of material toward bystanders nor allow anyone near the machine while in operation.
- Never operate the machine with damaged guards or without safety protective devices in place.
- Do not change the engine governor settings or overspeed the engine. Operating the engine at excessive speed can increase the hazard of personal injury.
- Before leaving the operator's position:
  - disengage the power take-off and lower the attachments;
  - change into neutral and set the parking brake;
  - stop the engine and remove the key.
- Disengage drive to attachments, stop the engine, and disconnect the spark plug wire(s) or remove the ignition key
  - before clearing blockages or unclogging chute;
  - before checking, cleaning or working on the lawnmower;
  - after striking a foreign object. Inspect the lawnmower for damage and make repairs before restarting and operating the equipment; if the machine starts to vibrate abnormally (check immediately).
- Disengage drive to attachments when transporting or not in use.
- Stop the engine and disengage drive to attachment
  - before refuelling;
  - before removing the grass catcher;
  - before making height adjustment unless adjustment can be made from the operator's position.
- Reduce the throttle setting during engine run-out and, if the engine is provided with a shut-off valve, turn the fuel off at the conclusion of mowing.

Maintenance and Storage

- Keep all nuts, bolts and screws tight to be sure the equipment is in safe working condition.
- Never store the equipment with fuel in the tank inside a building where fumes can reach an open flame or spark.

- Allow the engine to cool before storing in any enclosure.
- To reduce the fire hazard, keep the engine, silencer, battery compartment and fuel storage area free of grass, leaves, or excessive grease.
- Check the grass catcher frequently for wear or deterioration.
- Replace worn or damaged parts for safety.
- If the fuel tank has to be drained, this should be done outdoors.
- On multi-bladed machines, take care as rotating one blade can cause other blades to rotate.
- When machine is to be parked, stored or left unattended, lower the cutting means unless a positive mechanical lock is used.

Toro Riding Mower Safety

The following list contains safety information specific to Toro products or other safety information that you must know that is not included in the CEN standard.

- Engine exhaust contains carbon monoxide, which is an odorless, deadly poison that can kill you. Do not run engine indoors or in an enclosed area.
- Keep hands, feet, hair and loose clothing away from attachment discharge area, underside of mower and any moving parts while engine is running.
- Do not touch equipment or attachment parts which may be hot from operation. Allow to cool before attempting to maintain, adjust, or service.
- Battery acid is poisonous and can cause burns. Avoid contact with skin, eyes and clothing. Protect your face, eyes, and clothing when working with a battery.
- Battery gases can explode. Keep cigarettes, sparks and flames away from battery.
- Use only genuine Toro replacement parts to ensure that original standards are maintained.
- Use only Toro-approved attachments. Warranty may be voided if used with unapproved attachments.

Slope Operation

- Do not mow slopes greater than 15 degrees.
- Do not mow near drop-offs, ditches, steep banks or water. Wheels dropping over edges can cause rollovers, which may result in serious injury, death or drowning.
- Do not mow slopes when grass is wet. Slippery conditions reduce traction and could cause sliding and loss of control.
- Do not make sudden turns or rapid speed changes.
- Use a walk behind mower and/or a hand trimmer near drop-offs, ditches, steep banks or water.
- Reduce speed and use extreme caution on slopes.
- Remove or mark obstacles such as rocks, tree limbs, etc. from the mowing area. Tall grass can hide obstacles.
- Watch for ditches, holes, rocks, dips, and rises that change the operating angle, as rough terrain could overturn the machine.
- Avoid sudden starts when mowing uphill because the mower may tip backwards.
- Be aware that loss of traction may occur going downhill. Weight transfer to the front wheels may cause drive wheels to slip and cause loss of braking and steering.
- Always avoid sudden starting or stopping on a slope. If tires lose traction, disengage the blades and proceed slowly off the slope.
- Follow the manufacturer's recommendations for wheel weights or counterweights to improve stability.
- Use extreme care with grass catchers or other attachments. These can change the stability of the machine and cause loss of control.

Sound Pressure

This unit has a maximum sound pressure level at the operator's ear of 91 dBA, based on measurements of identical machines per EN 11094 and EN 836.

Sound Power

This unit has a guaranteed sound power level of 105 dBA, based on measurements of identical machines per EN 11094.

Vibration

This unit does not exceed a hand/arm vibration level of 4 m/s^2, based on measurements of identical machines per EN 1033. This unit does not exceed a whole body vibration level of 1.5 m/s^2, based on measurements of identical machines per EN 1032.

Slope Chart

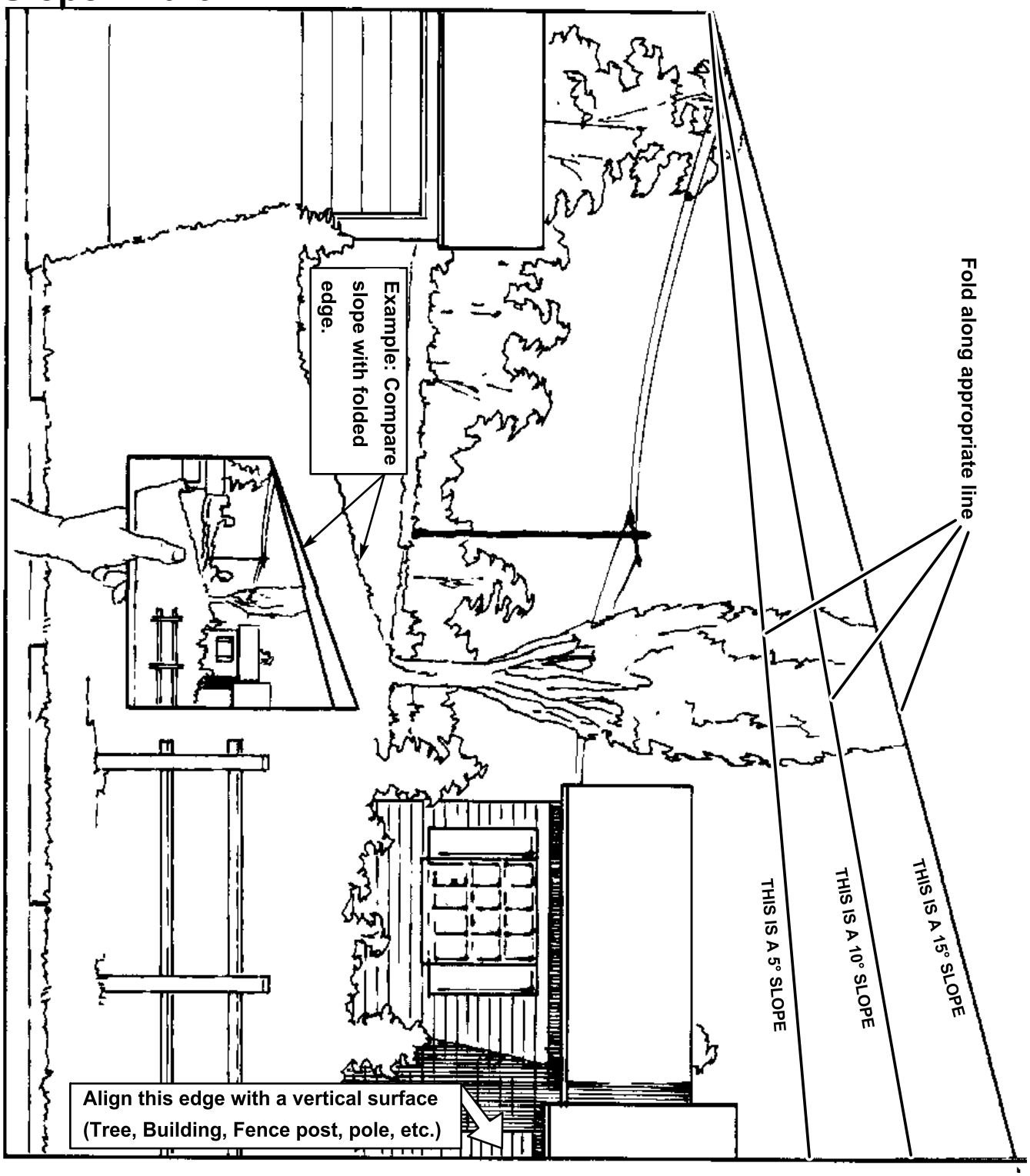
Example: Compare slope with folded edge.
Fold along appropriate line
THIS IS A 5° SLOPE
THIS IS A 10° SLOPE
THIS IS A 15° SLOPE
Align this edge with a vertical surface
(Tree, Building, Fence post, pole, etc.)

Safety and Instructional Decals

Safety decals and instructions are easily visible to the operator and are located near any area of potential danger. Replace any decal that is damaged or lost.

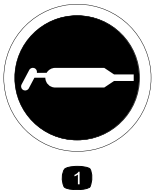

58-6520

1. Grease



93-7010

1. Thrown object hazard—
2. Thrown object hazard, mower—keep the deflector in place.
3. Cutting/dismemberment of hand or foot—stay away from moving parts.

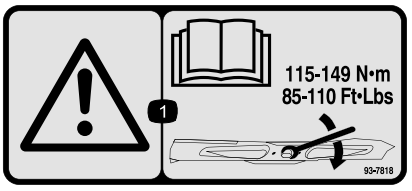

93-7818

1. Warning—read the *Operator's Manual* for instructions on torquing the blade bolt/nut to 115-149 N•m (85-110 ft-lb).

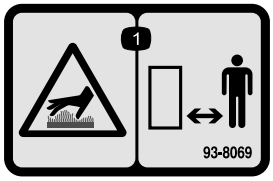

93-8069

1. Hot surface/burn hazard—stay a safe distance from the hot surface.

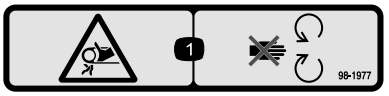

98-1977

1. Entanglement hazard, belt—stay away from moving parts.



98-4387

1. Warning—wear hearing protection.

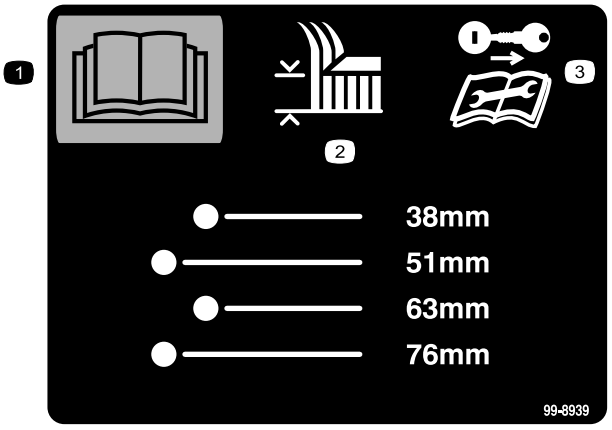

99-8939

1. Read the *Operator's Manual*.
2. Height of cut
3. Remove the ignition key and read the instructions before servicing or performing maintenance.



104-2449

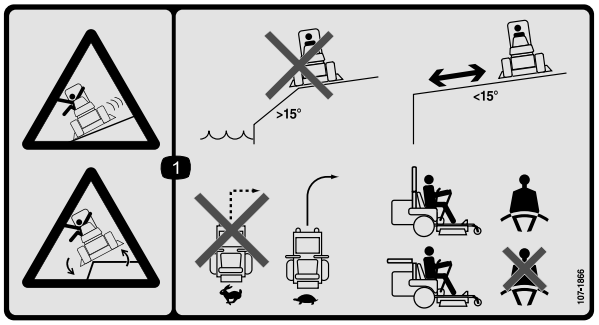

107-1866

1. Sliding and loss of control hazard and tipping hazard, drop-offs—do not operate the machine near drop-offs, slopes greater than 15 degrees, or water; keep a safe distance from drop-offs; do not turn sharply while traveling fast, instead, slow down and turn gradually; if the roll bar is raised, wear the seat belt; if the roll bar is lowered, do not wear the seat belt.

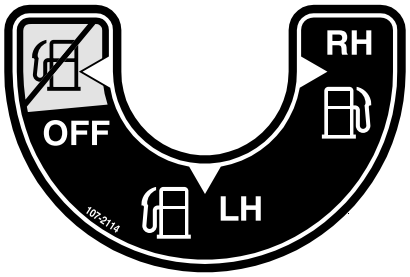

107-2114



107-2131

1. Hydraulic oil level
2. Warning—do not touch the hot surface.

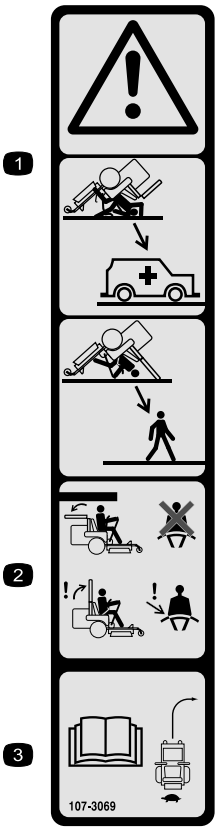

107-3069

1. Warning–there is no rollover protection when the roll bar is down.
2. To avoid injury or death from a rollover accident, keep the roll bar in the raised and locked position and wear the seat belt. Lower the roll bar only when absolutely necessary; do not wear the the seat belt when the roll bar is down.
3. Read the *Operator's Manual*; drive slowly and carefully.

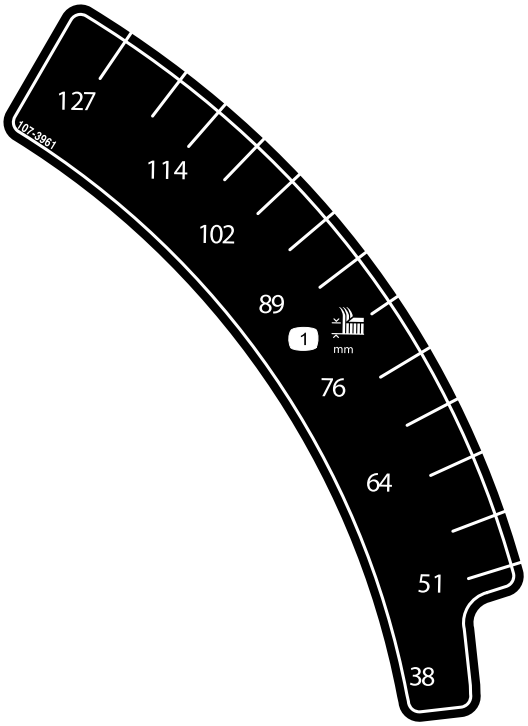

107-3961

1. Height of cut in millimeters

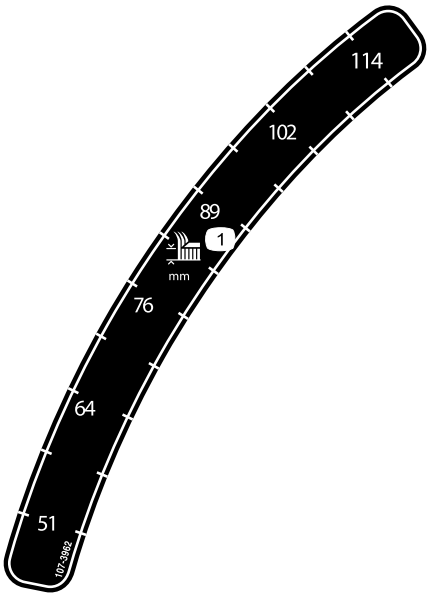

107-3962

1. Height of cut in millimeters

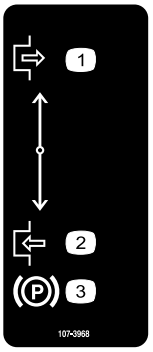

107-3968

1. Disengage
2. Engage
3. Parking brake

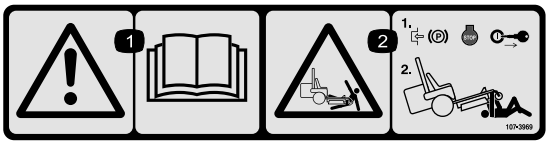

107-3969

1. Warning—read the *Operator's Manual*.
2. Crushing hazard, mower—engage the parking brake, stop the engine, and remove the ignition key before working under the mower.

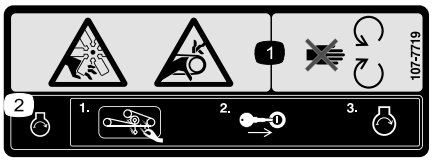

107-7719

1. Cutting/dismemberment hazard, fan and entanglement hazard, belt—stay away from moving parts.
2. Before starting the engine, clean grass and debris from the mower belt and pulleys, insert the ignition key, and start the engine.

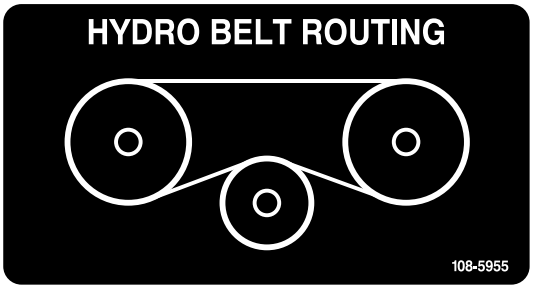

108-5955

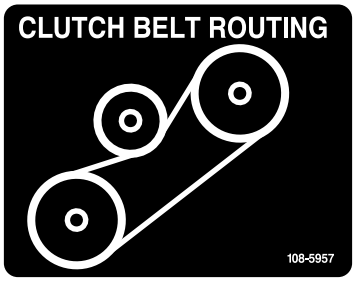

108-5957

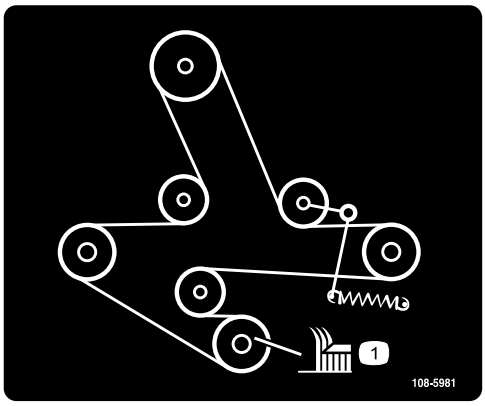

108-5981

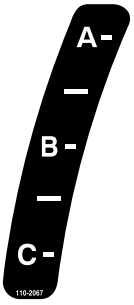

110-2067

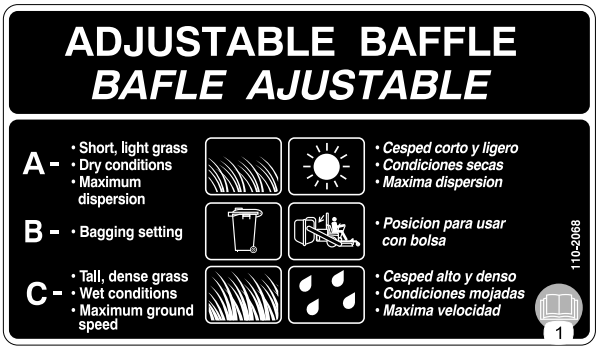

110-2068

1. Read the *Operator's Manual*.

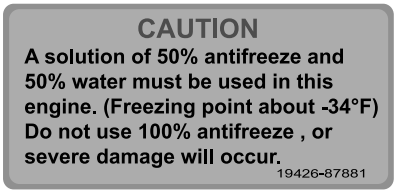

110-3842

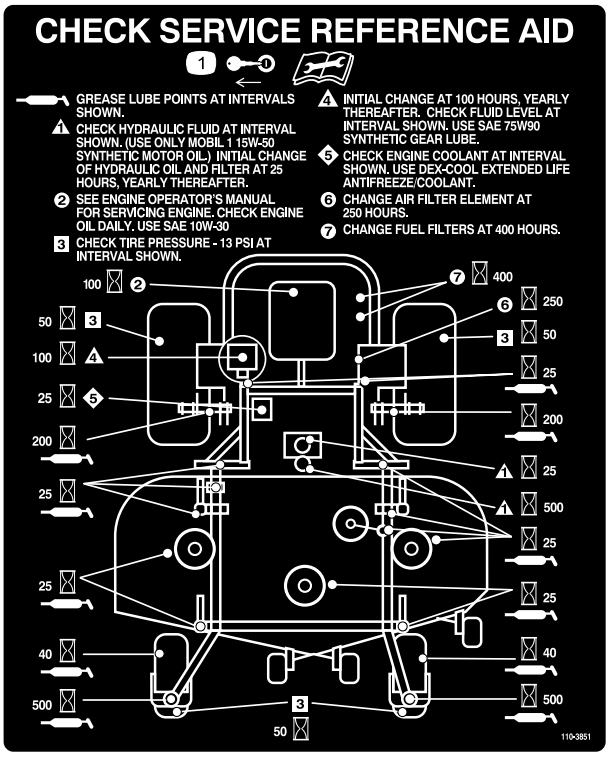

110-3851

1. Remove the ignition key and read the instructions before servicing or performing maintenance.

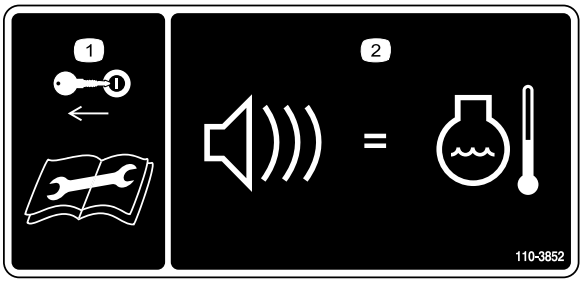

110-3852

1. Remove the ignition key and read the instructions before servicing or performing maintenance.
2. Continuous tone signals the user that engine is overheating.

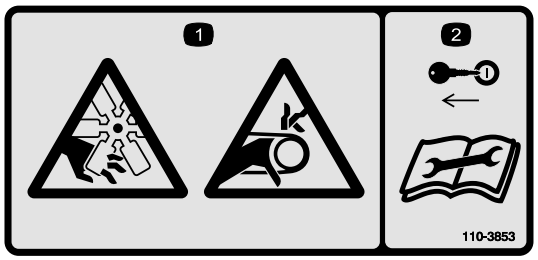

110-3853

1. Cutting/dismemberment hazard, fan and entanglement hazard, belt.
2. Remove the ignition key and read the instructions before servicing or performing maintenance.

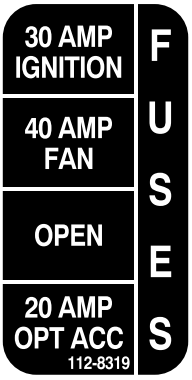

112-8319



110-0305

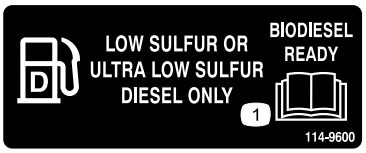

114-9600

1. Read the *Operator's Manual.*

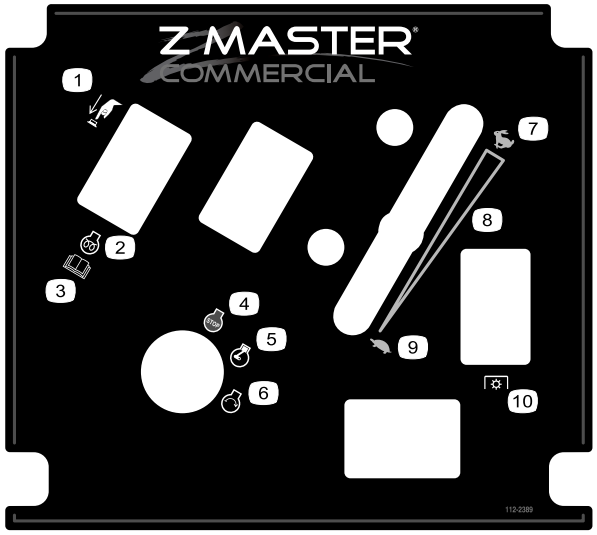

112-2389

1. Push to engage
2. Engine—preheat
3. Read the *Operator's Manual.*
4. Engine—stop
5. Engine—run
6. Engine—start
7. Fast
8. Continuous variable setting
9. Slow
10. PTO (Power take off)

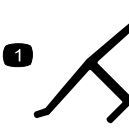

Manufacturer's Mark

1. Indicates the blade is identified as a part from the original machine manufacturer.



Battery Symbols

Some or all of these symbols are on your battery

1. Explosion hazard
2. No fire, open flame, or smoking.
3. Caustic liquid/chemical burn hazard
4. Wear eye protection
5. Read the *Operator's Manual.*
6. Keep bystanders a safe distance from the battery.
7. Wear eye protection; explosive gases can cause blindness and other injuries
8. Battery acid can cause blindness or severe burns.
9. Flush eyes immediately with water and get medical help fast.
10. Contains lead; do not discard.

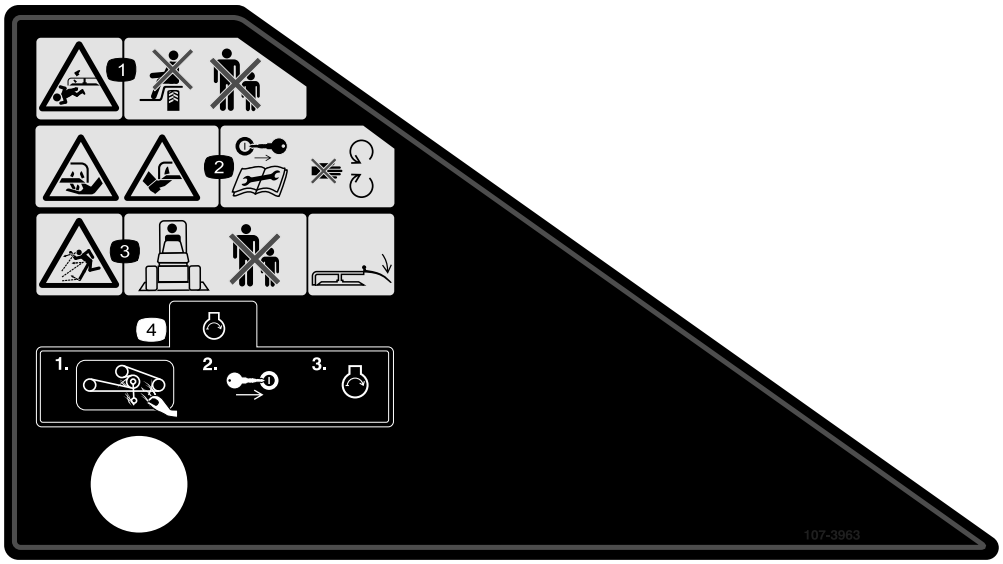

107-3963

1. Cutting/dismemberment hazard, mower blade—do not carry passengers and keep bystanders away.
2. Cutting/dismemberment hazard of hand or foot, mower blade—remove the ignition key and read the instructions before servicing or performing maintenance; stay away from moving parts.
3. Thrown object hazard—keep bystanders a safe distance from the machine and keep the deflector in place.
4. Before starting the engine, clean grass and debris from the mower belt and pulleys, insert the ignition key, and start the engine.

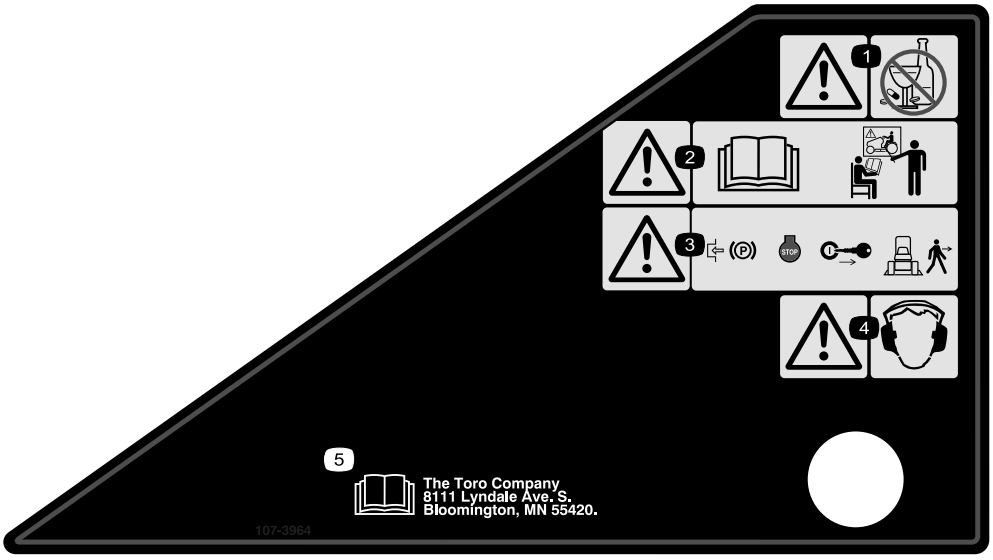

107-3964

1. Warning—do not use drugs or alcohol.
2. Warning—read the *Operator's Manual* and receive training.
3. Warning—engage the parking brake, stop the engine, and remove the ignition key before leaving the machine.
4. Warning—wear hearing protection.
5. Read the *Operator's Manual*.

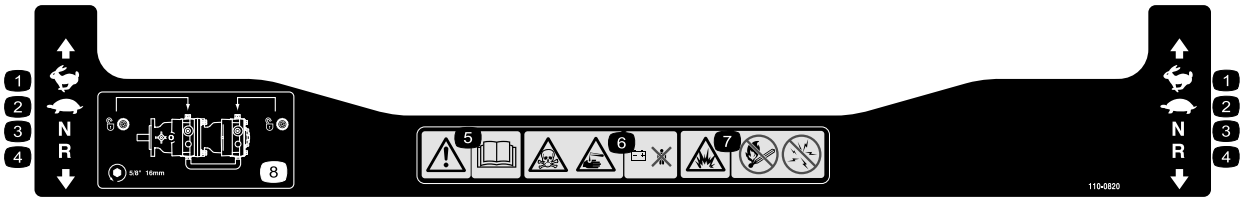

110-0820

1. Fast
2. Slow
3. Neutral
4. Reverse
5. Warning—read the *Operator's Manual*.
6. Poison and caustic liquid/chemical burn hazard—keep children a safe distance from the battery.
7. Explosion hazard—no fire, open flames, or smoking; avoid sparks.
8. To unlock the traction drive, turn the by-pass valve 1 complete revolution counterclockwise using a 5/8 inch or 16 mm wrench.

Product Overview

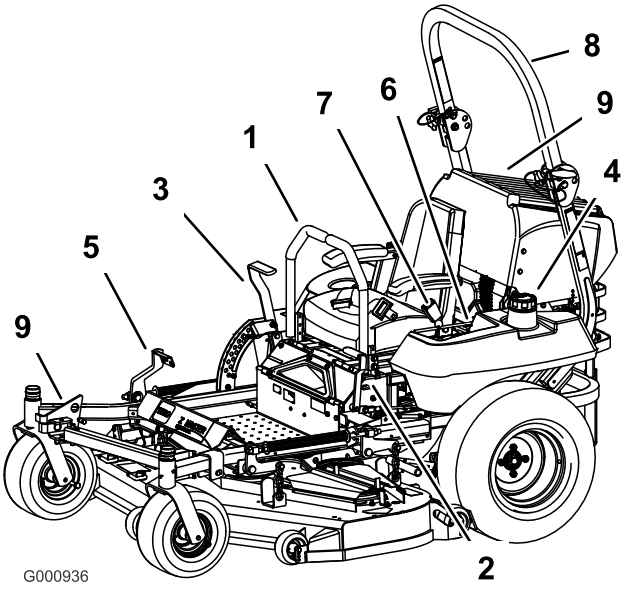

Figure 3

1. Motion control lever
2. Parking brake lever
3. Height-of-cut lever
4. Fuel cap (both sides)
5. Lift-assist lever
6. Controls
7. Seat belt
8. Roll bar
9. Engine screen

Controls

Become familiar with all the controls before you start the engine and operate the machine (Figure 3 and Figure 4).

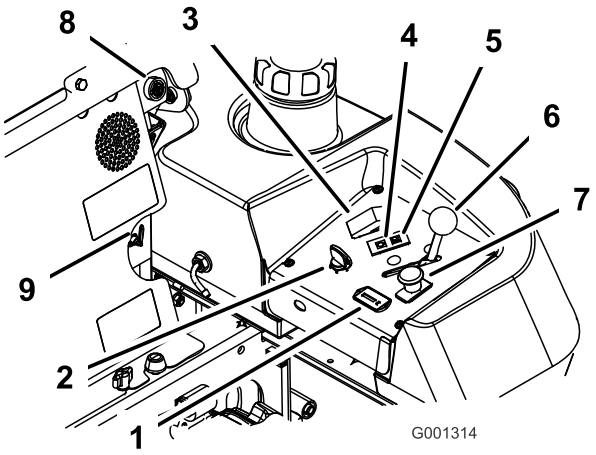

Figure 4

1. Hour meter
2. Ignition switch
3. Glow plug switch
4. Glow plug light
5. Engine Temperature light
6. Throttle control
7. PTO Switch
8. Audible alarm
9. Fuel selector valve

Hour Meter

The hour meter records the number of hours the engine has operated. It operates when the engine is running. Use these times for scheduling regular maintenance (Figure 4).

Glow Plug Light

The glow plug indicator light turns on when the glow plug button is engaged (Figure 4).

Glow Plug Switch

This switch activates the glow plugs and is indicated by the glow plug light. Hold down the glow plug switch for 10 seconds prior to starting.

Temperature Light

The temperature light comes on when the engine is over heating (Figure 4).

Audible Alarm

This machine has an audible alarm that alerts the user to turn off the engine or engine damage can occur from over heating. Refer to Servicing the Cooling System in Cooling System Maintenance , page 43.

Fuel Selector Valve

The fuel selector valve is located behind the seat.

Close the fuel selector valve when transporting or storing mower.

Move the selector valve to the lefthand (LH) or righthand (RH) position for operation.

Operation

Note: Determine the left and right sides of the machine from the normal operating position.

Adding Fuel

The engine runs on clean, fresh diesel fuel with a minimum octane rating of 40. Purchase fuel in quantities that can be used within 30 days to ensure fuel freshness.

Use summer grade diesel fuel (No. 2-D) at temperatures above 20° F (-7° C) and winter grade diesel fuel (No. 1-D or No. 1-D/2-D blend) below 20° F (-7° C). Use of winter grade diesel fuel at lower temperatures provides lower flash point and pour point characteristics, therefore easing startability and lessening chances of chemical separation of the fuel due to lower temperatures (wax appearance, which may plug filters).

Use of summer grade diesel fuel above 20° F (-7° C) will contribute toward longer life of the pump components.

Important: Do not use kerosene or gasoline instead of diesel fuel. Failure to observe this caution will damage the engine.

Fuel is harmful or fatal if swallowed. Long-term exposure to vapors can cause serious injury and illness.

- **Avoid prolonged breathing of vapors.**
- **Keep face away from nozzle and gas tank or conditioner opening.**
- **Keep gas away from eyes and skin.**

In certain conditions, fuel is extremely flammable and highly explosive. A fire or explosion from fuel can burn you and others and can damage property.

- **Fill the fuel tank outdoors, in an open area, when the engine is cold. Wipe up any fuel that spills.**
- **Never fill the fuel tank inside an enclosed trailer.**
- **Do not fill the fuel tank completely full. Add fuel to the fuel tank until the level is 1/4 to 1/2 inch (6 to 13 mm) below the bottom of the filler neck. This empty space in the tank allows fuel to expand.**
- **Never smoke when handling fuel, and stay away from an open flame or where fuel fumes may be ignited by a spark.**
- **Store fuel in an approved container and keep it out of the reach of children. Never buy more than a 30-day supply of fuel.**
- **Always place fuel containers on the ground away from your vehicle before filling.**
- **Do not fill fuel containers inside a vehicle or on a truck or trailer bed because interior carpets or plastic truck bed liners may insulate the container and slow the loss of any static charge.**
- **When practical, remove gas-powered equipment from the truck or trailer and refuel the equipment with its wheels on the ground.**
- **If this is not possible, then refuel such equipment on a truck or trailer from a portable container, rather than from a fuel dispenser nozzle.**
- **If a fuel dispenser nozzle must be used, keep the nozzle in contact with the rim of the fuel tank or container opening at all times until fueling is complete.**

Biodiesel Ready

This machine can also use a biodiesel blended fuel of up to B20 (20% biodiesel, 80% petrodiesel). The petrodiesel portion should be low or ultra low sulfur.

Observe the following precautions:

- The biodiesel portion of the fuel meet specification ASTM D6751 or EN14214.
- The blended fuel composition should meet ASTM D975 or EN590.
- Painted surfaces may be damaged by biodiesel blends.
- Use B5 (biodiesel contend of 5%) or lesser blend in cold weather.
- Monitor seals, hoses, gaskets in contact with fuel as they may be degrade over time.
- Fuel filter plugging maybe expected for a time after converting to biodiesel blends.
- Contact your distributor if you wish for more information on biodiesel.

Filling the Fuel Tank

1. Shut the engine off and set the parking brake.
2. Clean around each fuel tank cap and remove the cap. Add fuel to both fuel tanks, until the level is 1/4 to 1/2 inch (6 to 13 mm) below the bottom of the filler neck. This space in the tank allows the fuel to expand. Do not fill the fuel tanks completely full.
3. Install fuel tank caps securely. Wipe up any fuel that may have spilled.
4. If possible, fill the fuel tank after each use. This will minimize possible buildup of condensation inside the fuel tank.

Checking the Engine Oil Level

Before you start the engine and use the machine, check the oil level in the engine crankcase; refer to Checking Oil Level in Engine Maintenance , page 32

Switching the Fuel Tanks

Important: Do not run the machine out of fuel. This may cause engine damage and require the fuel system to be checked.

The fuel selector valve is located behind the left side of the seat.

The unit has two fuel tanks. One tank is on the left side and one on the right side. Each tank connects to the fuel selector valve. From there a common fuel line leads to the engine (Figure 5).

To use the left side fuel tank rotate the fuel selector valve to the LH, lefthand location. To use the right side fuel tank rotate the fuel selector valve to the RH, righthand location (Figure 5)

Close the fuel selector valve before transporting or storing machine.

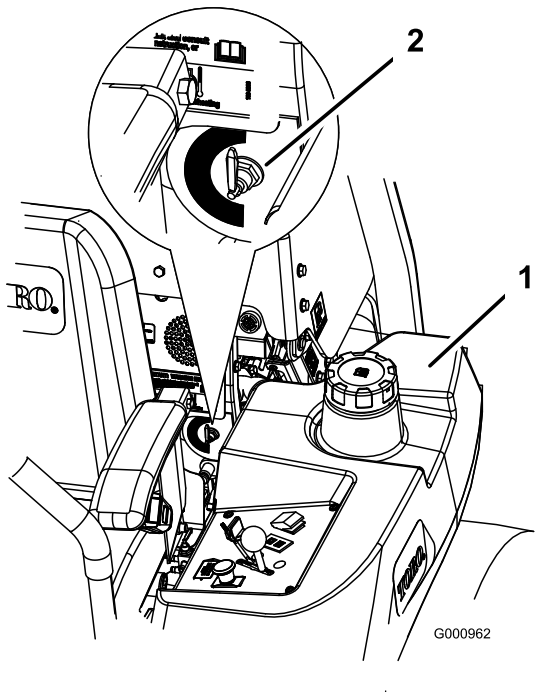

Figure 5

1. Left side fuel tank
2. Fuel selector valve

Using the Rollover Protection System (ROPS)

To avoid injury or death from rollover: keep the roll bar in the raised locked position and use the seat belt.

Ensure that the rear part of the seat is secured with the seat latch.

There is no rollover protection when the roll bar is in the down position.

- **Lower the roll bar only when absolutely necessary.**
- **Do not wear the seat belt when the roll bar is in the down position.**
- **Drive slowly and carefully.**
- **Raise the roll bar as soon as clearance permits.**
- **Check carefully for overhead clearances (i.e. branches, doorways, electrical wires) before driving under any objects and do not contact them.**

Important: Lower the roll bar only when absolutely necessary.

1. Remove the hairpin cotter pins and remove the two pins (Figure 7).
2. Lower the roll bar to the down position. There are two down positions. See Figure 6 for the positions.
3. Install the two pins and secure them with the hairpin cotter pins (Figure 7).

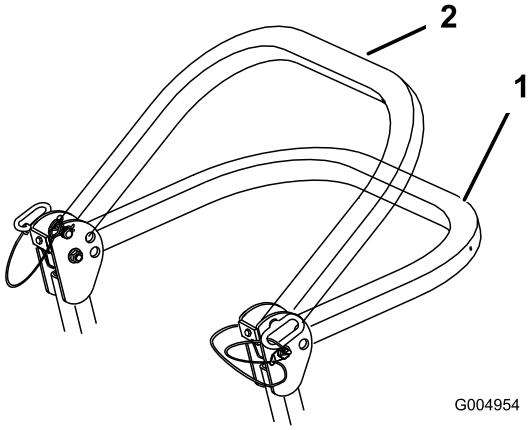

Figure 6

1. Full down position
2. Down position with bagger installed

Important: Ensure that the rear part of the seat is secured with the seat latch.

4. To raise the roll bar, remove the hairpin cotter pins and remove the two pins (Figure 7).
5. Raise the roll bar to the upright position and install the two pins and secure them with the hairpin cotter pins (Figure 7).

Important: **Always use the seat belt with the roll bar in the raised position.**

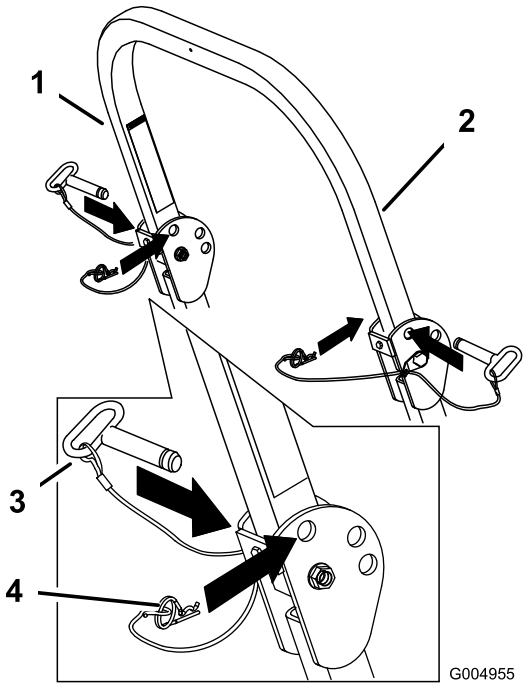

Figure 7

1. Roll bar
2. Raised position
3. Pin
4. Hairpin cotter pin

Operating on wet grass or steep slopes can cause sliding and loss of control.

Wheels dropping over edges can cause rollovers, which may result in serious injury, death or drowning.

There is no rollover protection when the roll bar is down.

Always keep the roll bar in the raised and locked position and use the seat belt.

Read and follow the rollover protection instructions and warnings.

To avoid loss of control and possibility of rollover:

- **Do not operate near drop-offs or near water.**
- **Do not operate on slopes greater than 15 degrees.**
- **Reduce speed and use extreme caution on slopes.**
- **Avoid sudden turns or rapid speed changes.**

Think Safety First

Please read all safety instructions and symbols in the safety section. Knowing this information could help you or bystanders avoid injury.

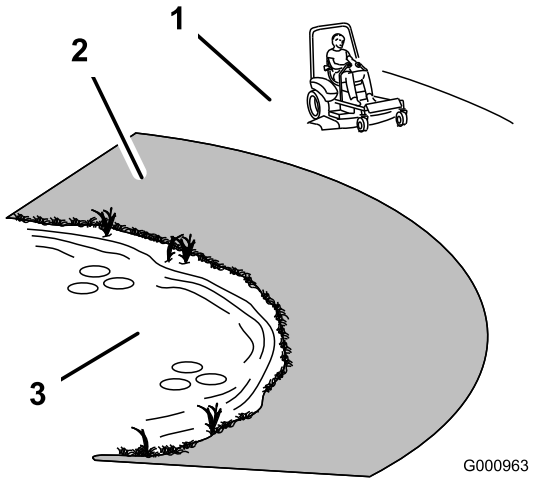

Figure 8

1. Safe Zone-use the Z Master here on slopes less than 15 degrees or flat areas.
2. Use walk behind mower and/or hand trimmer near drop-offs and water.
3. Water

This machine produces sound levels in excess of 85 dBA at the operators ear and can cause hearing loss through extended periods of exposure.

Wear hearing protection when operating this machine.

Wear protective equipment for your eyes, ears, feet, and head when using this machine.

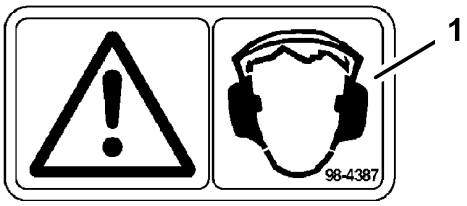

G000504

Figure 9

1. Warning— wear hearing protection

Operating the Parking Brake

Always set the parking brake when you stop the machine or leave it unattended.

Setting the Parking Brake

1. Move the motion control levers (Figure 15) out to the neutral lock position.
2. Pull up and back on the parking brake lever to set the parking brake (Figure 10). The parking brake lever should stay firmly in the engaged position.

Parking brake may not hold machine parked on a slope and could cause personal injury or property damage.

Do not park on slopes unless wheels are chocked or blocked

Releasing the Parking Brake

Push forward and down on the parking brake lever to release the parking brake (Figure 10). The parking brake is disengaged and the lever will rest against the brake stop.

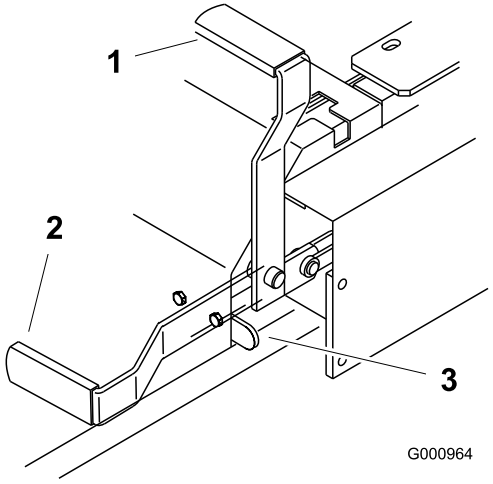

G000964

Figure 10

1. Parking brake-ON
2. Parking brake-OFF
3. Brake Stop

Starting and Stopping the Engine

Starting the Engine in Normal Weather

1. Raise the ROPS up and lock into place, sit on the seat and fasten the seat belt.
2. Move the motion controls to the neutral locked position.
3. Set the parking brake; refer to Setting the Parking Brake.
4. Move the PTO (power take off) switch to the off position (Figure 11).
5. Move the throttle lever to the middle position (Figure 13).
6. Turn the ignition key clockwise to the run position (Figure 12).
7. Push the glow plug switch for 10 seconds. The light will turn on.
8. Release the switch after 10 seconds. The light will turn off.

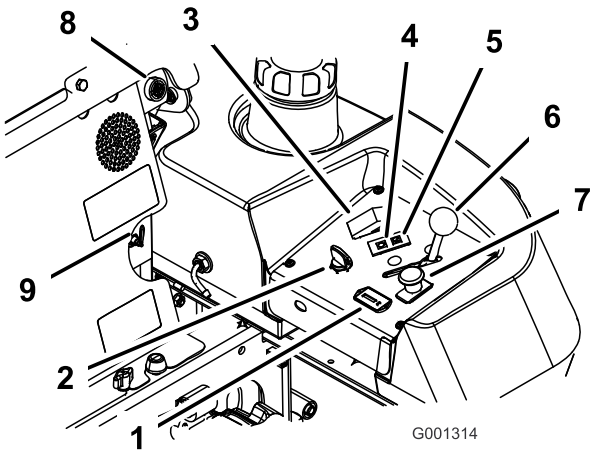

Figure 11

1. Hour meter
2. Ignition switch
3. Glow plug switch
4. Glow plug light
5. Engine Temperature light
6. Throttle control
7. PTO Switch
8. Audible alarm
9. Fuel selector valve

9. Turn the key to the start position and the glow plug indicator light will come back on. When the engine starts, release the key (Figure 12).

   Important: Use starting cycles of no more than 30 seconds per minute to avoid overheating the starter motor.

10. If the engine does not start immediately, move the throttle control to fast and turn the key to the start position.

    Note: Additional starting cycles may be required when starting the engine for the first time after the fuel system has been completely without fuel.

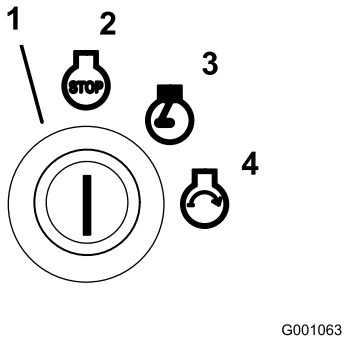

Figure 12

1. Ignition switch
2. Off
3. Run
4. Start

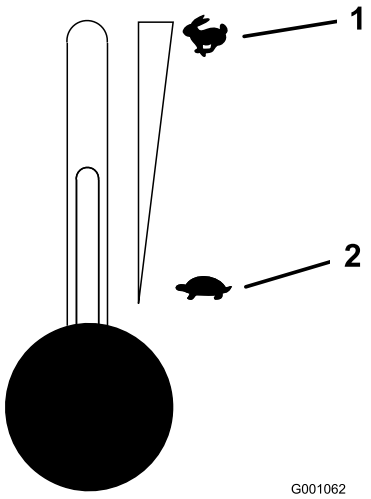

Figure 13

1. Throttle—fast
2. Throttle—slow

Starting the Engine in Cold Weather (Below 23°F or -5°C)

Note: Use the correct engine oil for the starting temperature. Refer to Servicing the Engine Oil in Engine Maintenance , page 32.

1. Start the engine with the throttle in the **Fast** position.
2. Turn the ignition key clockwise to the run position (Figure 12).
3. Push the glow plug switch for 10 to 15 seconds. The light will turn on.
4. Release the switch after 10 to 15 seconds. The light will turn off.
5. Turn the key to the start position and the glow plug indicator light will come back on. When the engine starts, release the key.

   Important: Use starting cycles of no more than 30 seconds per minute to avoid overheating the starter motor.

   Note: Do not use fuel left over from the summer. Use only fresh winter grade diesel fuel.

Stopping the Engine

1. Disengage the PTO, move the motion control levers to the neutral locked position and set the parking brake (Figure 14).
2. Move the throttle lever midway between the slow and fast positions (Figure 13).
3. Let the engine idle for 60 seconds.

4. Turn the ignition key to the off position (Figure 12). Wait for all moving parts to stop before leaving the operating position.
5. Remove the key to prevent possibility of someone accidentally starting the machine before transporting or storing machine.
6. Close the fuel selector valve before transporting or storing the machine.

   Important: Make sure that the fuel selector valve is closed before transporting or storing the machine, as fuel leakage may occur. Set the parking brake before transporting.

   Important: Make sure to remove the key as the fuel pump may run and cause the battery to lose charge.

Children or bystanders may be injured if they move or attempt to operate the tractor while it is unattended.

Always remove the ignition key and set the parking brake when leaving the machine unattended, even if just for a few minutes.

Operating the Power Take Off (PTO)

The power take off (PTO) switch starts and stops the mower blades and any powered attachments.

Engaging the PTO

1. If the engine is cold, allow the engine to warm up 5 to 10 minutes before engaging the PTO.
2. While seated in the seat, release the pressure on the traction control levers and place in neutral.
3. Place the throttle in the fast position.

   Note: Engaging the PTO with the throttle at the half or less position will cause excessive wear to the drive belts.
4. Pull out on the power take off (PTO) switch to engage it (Figure 14).

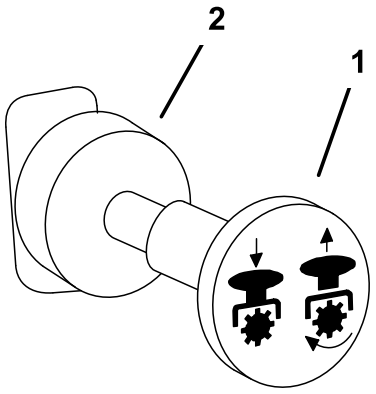

G000937

Figure 14

1. PTO-On
2. PTO-Off

Disengaging the PTO

To disengage, push the PTO switch to the **off** position (Figure 14).

The Safety Interlock System

If safety interlock switches are disconnected or damaged the machine could operate unexpectedly causing personal injury.

- **Do not tamper with the interlock switches.**
- **Check the operation of the interlock switches daily and replace any damaged switches before operating the machine.**

Understanding the Safety Interlock System

The safety interlock system is designed to prevent the engine from starting unless:

- You are sitting on the seat.
- The parking brake is engaged.
- The power take off (PTO) is disengaged.
- The motion control levers are in the neutral locked position

The safety interlock system also is designed to stop the engine when the traction controls are moved from the locked position with the parking brake engaged or if you rise from the seat when the PTO is engaged.

Testing the Safety Interlock System

Test the safety interlock system before you use the machine each time. If the safety system does not operate as described below, have an Authorized Service Dealer repair the safety system immediately.

1. Sitting on the seat, engage the parking brake and move the PTO to on. Try starting the engine; the engine should not crank.
2. Sitting on the seat, engage the parking brake and move the PTO to off. Move either motion control lever (out of neutral locked position). Try starting the engine; the engine should not crank. Repeat for other control lever.
3. Sitting on the seat, engage the parking brake, move the PTO switch to off and move the motion control levers to neutral lock position. Now start the engine. While the engine is running, release the parking brake, engage the PTO and rise slightly from the seat; the engine should stop.
4. Sitting on the seat, engage the parking brake, move the PTO switch to off and move the motion control levers to neutral lock position. Now start the engine. While the engine is running, center either motion control and move (forward or reverse); the engine should stop. Repeat for other motion control.
5. Sitting on the seat, disengage the parking brake, move the PTO switch to off and move the motion control levers to neutral lock position. Try starting the engine; the engine should not crank.

Driving Forward or Backward

The throttle control regulates the engine speed as measured in rpm (revolutions per minute). Place the throttle control in the fast position for best performance. Always operate in the full throttle position when mowing.

Machine can spin very rapidly. Operator may lose control of machine and cause personal injury or damage to machine.

- **Use caution when making turns.**
- **Slow the machine down before making sharp turns.**

Driving Forward

1. Release the parking brake; refer to Releasing the Parking Brake in Operation , page 14.
2. Move the levers to the center, un-locked position.
3. To go forward, slowly push the motion control levers forward (Figure 15).

   Note: The engine will kill if the traction control levers are moved with the parking brake engaged.

   To go straight, apply equal pressure to both motion control levers (Figure 15).

   To turn, move the motion control lever toward neutral in the direction you want to turn (Figure 15).

   The farther you move the traction control levers in either direction, the faster the machine will move in that direction.

   To stop, pull the motion control levers to the neutral position.

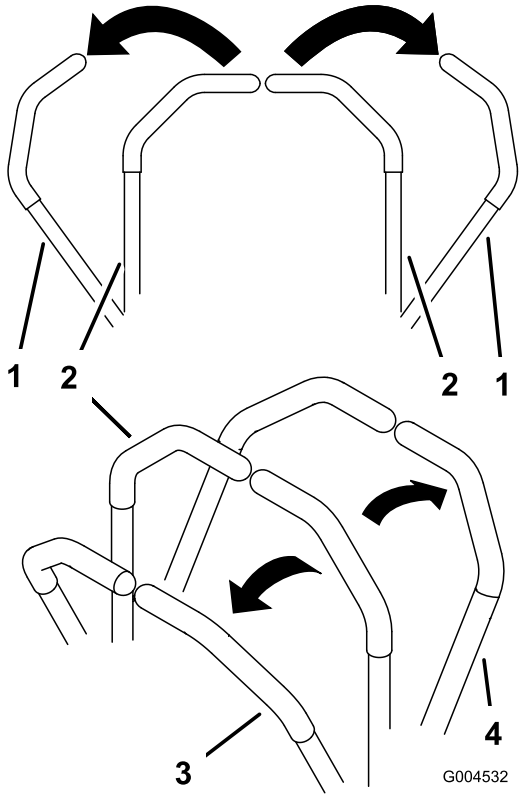

Figure 15

1. Motion control lever-neutral lock position
2. Center un-lock position
3. Forward
4. Backward

Driving Backward

1. Move the levers to the center, un-locked position.
2. To go backward, slowly pull the motion control levers rearward (Figure 15).

   To go straight, apply equal pressure to both motion control levers (Figure 15).

To turn, release pressure on the motion control lever toward the direction you want to turn (Figure 15).

To stop, push the motion control levers to the neutral position.

Stopping the Machine

To stop the machine, move the traction control levers to neutral and move to locked position, disengage the power take off (PTO), and turn the ignition key to off.

Set the parking brake when you leave the machine; refer to Setting the Parking Brake in Operation , page 14. Remember to remove the key from the ignition switch.

Children or bystanders may be injured if they move or attempt to operate the tractor while it is unattended.

Always remove the ignition key and set the parking brake when leaving the machine unattended, even if just for a few minutes.

Adjusting the Height-of-Cut

The height-of-cut is adjusted from 1-1/2 to 5 inch (38 to 127 mm) in 1/4 inch (6 mm) increments by relocating the clevis pin into different hole locations.

1. Raise the height-of-cut lever to the transport position (also the 5 inch (127 mm) cutting height position) (Figure 16).
2. To adjust, remove the clevis pin from the height-of-cut bracket (Figure 16).
3. Select a hole in the height-of-cut bracket corresponding to the height-of-cut desired and, insert the clevis pin (Figure 16).
4. Move the lever to the selected height.

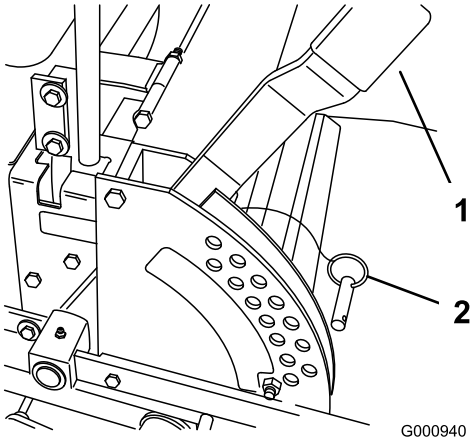

Figure 16

1. Height of cut lever
2. Clevis Pin

Adjusting the Anti-Scalp Rollers

Whenever you change the height-of-cut, it is recommended to adjust the height of the anti-scalp rollers.

1. Disengage the PTO, move the motion control levers to the neutral locked position and set the parking brake.
2. Stop the engine, remove the key, and wait for all moving parts to stop before leaving the operating position.
3. After adjusting the height-of-cut, adjust the rollers by removing the flange nut, bushing, spacer, and bolt (Figure 17 , Figure 18 and Figure 19).

   Note: The two middle rollers will not have a spacer (Figure 18).
4. Select a hole so the anti-scalp roller is positioned to the nearest corresponding height-of-cut desired.
5. Install the flange nut bushing, spacer, and bolt. Torque to 40-45 ft-lb (54-61 N•m) (Figure 17 , Figure 18 and Figure 19).
6. Repeat this adjustment on the other anti-scalp rollers.

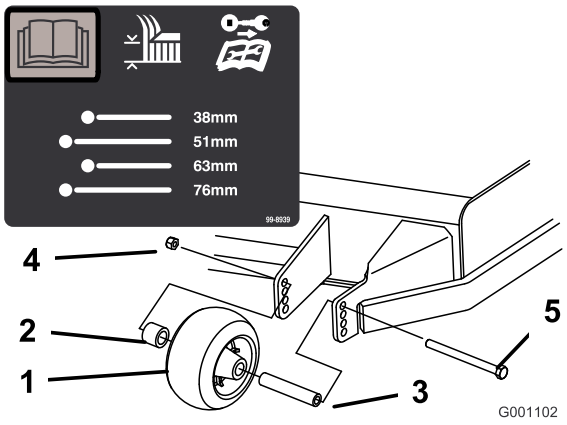

Figure 17

1. Anti-scalp roller
2. Spacer
3. Bushing
4. Flange Nut
5. Bolt

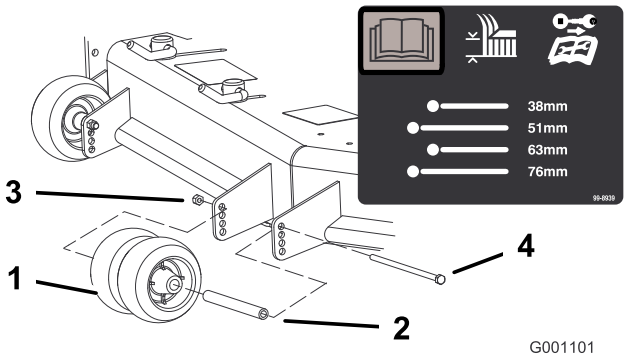

Figure 18

1. Anti-scalp roller
2. Bushing
3. Flange Nut
4. Bolt

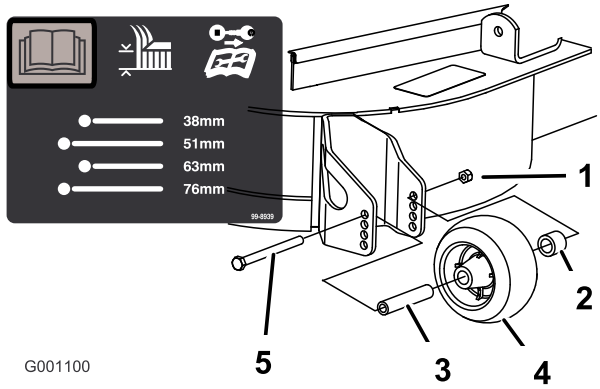

Figure 19

1. Anti-scalp roller
2. Spacer
3. Bushing
4. Flange Nut
5. Bolt

Adjusting the Flow Baffle

The mower discharge flow can be adjusted for different types of mowing conditions. Position the cam locks and baffle to give the best quality of cut.

1. Disengage the PTO, move the motion control levers to the neutral locked position and set the parking brake.
2. Stop the engine, remove the key, and wait for all moving parts to stop before leaving the operating position.
3. To adjust the cam locks, swing the lever up to loosen the cam lock (Figure 20).
4. Adjust the baffle and cam locks in the slots to the desired discharge flow.
5. Swing the lever back over to tighten the baffle and cam locks (Figure 20).
6. If the cams do not lock the baffle into place or it is too tight, loosen the lever and then rotate the cam lock. Adjust the cam lock until the desired locking pressure is achieved.

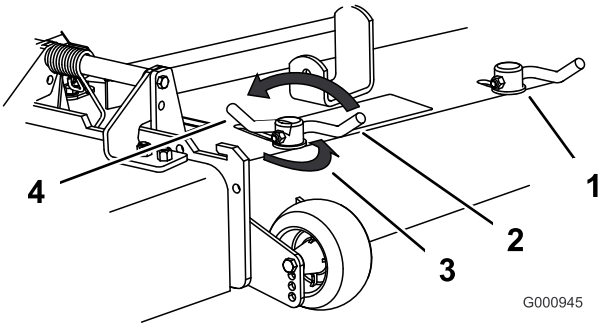

Figure 20

1. Cam lock
2. Lever
3. Rotate cam to increase or decrease locking pressure
4. Slot

Positioning the Flow Baffle

The following figures are only recommendations for use. Adjustments will vary by grass type, moisture content, and height of grass.

Note: If the engine power draws down and the mower ground speed is the same, open up the baffle.

Position A

This is the full rear position. The suggested use for this position is a follows (Figure 21).

- Use for short, light grass mowing conditions.
- Use in dry conditions.

- For smaller grass clippings.
- Propels grass clippings farther away from the mower.

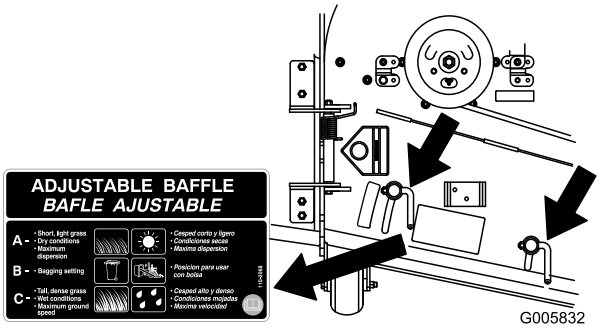

Figure 21

Position B

Use this position when bagging.

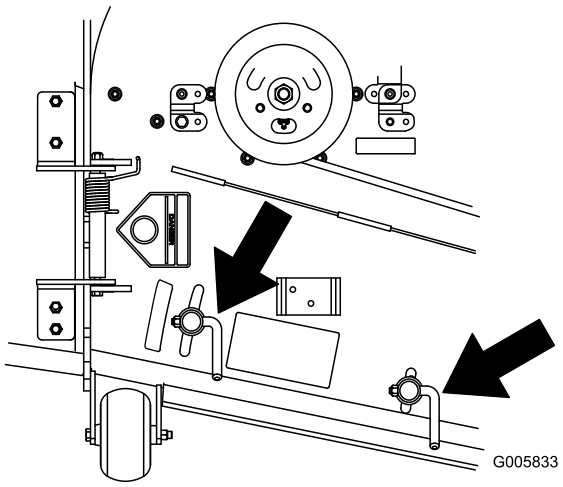

Figure 22

Position C

This is the full open position. The suggested use for this position is as follows.

- Use in tall, dense grass mowing conditions.
- Use in wet conditions.
- Lowers the engine power consumption.
- Allows increased ground speed in heavy conditions.
- This position is similar to the benefits of the Toro SFS mower.

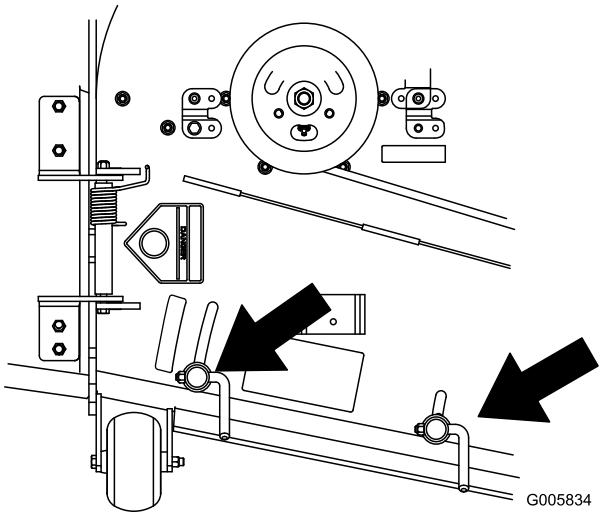

Figure 23

Positioning the Seat

Changing the Seat Position

The seat can move forward and backward. Position the seat where you have the best control of the machine and are most comfortable.

1. To adjust, move the lever sideways to unlock seat (Figure 24).
2. Slide the seat to the desired position and release the lever to lock it in position.

Changing the Seat Suspension

The seat can be adjusted to provide a smooth and comfortable ride. Position the seat where you are most comfortable.

To adjust, turn the knob in front either direction to provide the best comfort (Figure 24).

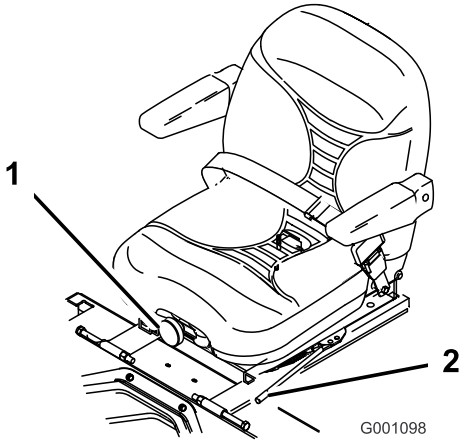

Figure 24

1. Seat suspension knob
2. Seat position lever

Changing the Back Position

The back of the seat can be adjusted to provide a comfortable ride. Position the back of the seat where it is most comfortable.

To adjust, turn the knob, under the rightside arm rest, in either direction to provide the best comfort (Figure 25).

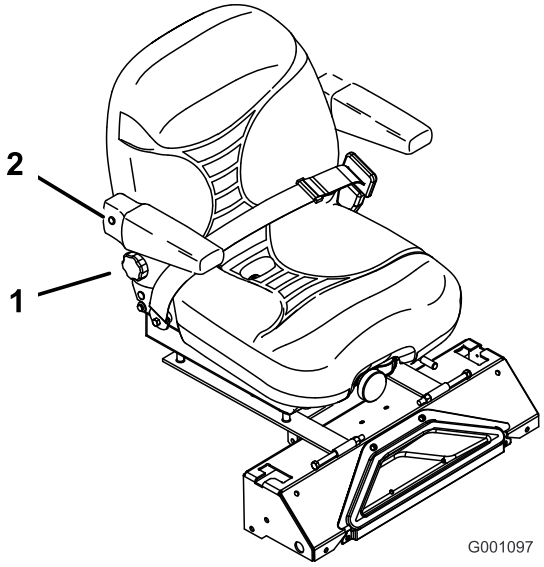

Figure 25

1. Back rest knob
2. Rightside arm rest

Unlatching the Seat

Push the seat latch rearward to unlatch the seat. This will allow access to the machine under the seat (Figure 26).

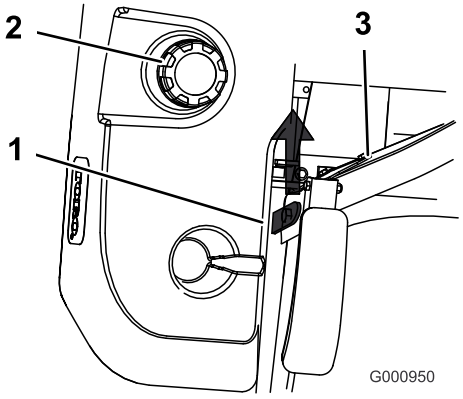

Figure 26

1. Seat latch
2. Fuel cap
3. Seat

Pushing the Machine by Hand

Important: Always push the machine by hand. Never tow the machine because hydraulic damage may occur.

Pushing the Machine

1. Disengage the power take off (PTO) and turn the ignition key to off. Move the levers to neutral locked position and apply parking brake. Remove the key.
2. Rotate the by-pass valves counterclockwise 1 turn to push. This allows hydraulic fluid to by-pass the pump enabling the wheels to turn (Figure 27).

   Important: Do not rotate by-pass valves more than 1 turn. This prevents valves from coming out of the body and causing fluid to run out.
3. Disengage parking brake before pushing.

Changing to Machine Operation

Rotate the by-pass valves clockwise 1 turn to operate machine (Figure 27).

Note: Do not over tighten the by-pass valves.

The machine will not drive unless by-pass valves are turned in.

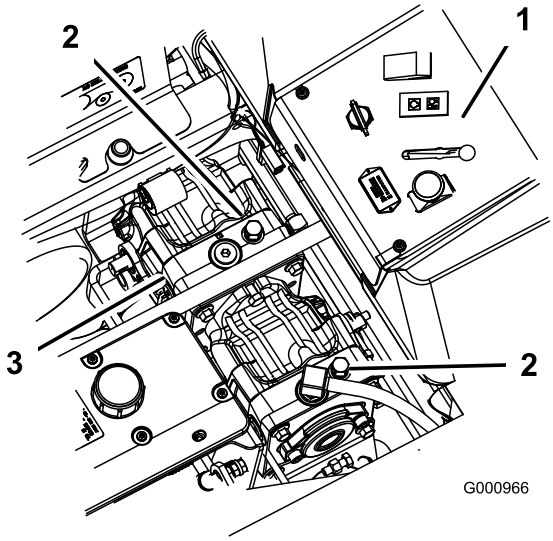

Figure 27

1. Side console controls
2. By-pass valve
3. Hydraulic pumps

Using the Side Discharge

The mower has a hinged grass deflector that disperses clippings to the side and down toward the turf.

Without the grass deflector, discharge cover, or complete grass catcher assembly mounted in place, you and others are exposed to blade contact and thrown debris. Contact with rotating mower blade(s) and thrown debris will cause injury or death.

- **Never remove the grass deflector from the mower because the grass deflector routes material down toward the turf. If the grass deflector is ever damaged, replace it immediately.**
- **Never put your hands or feet under the mower.**
- **Never try to clear the discharge area or mower blades unless you move the power take off (PTO) to the off position, rotate the ignition key to off and remove the key.**
- **Make sure the grass deflector is in the down position.**

Transporting Machines

Use a heavy-duty trailer or truck to transport the machine. Ensure that the trailer or truck has all necessary lighting and marking as required by law. Please carefully read all the safety instructions. Knowing this information could help you, your family, pets or bystanders avoid injury.

To transport the machine:

- Lock the brake and block the wheels.
- Securely fasten the machine to the trailer or truck with straps, chains, cable, or ropes.
- Secure a trailer to the towing vehicle with safety chains.

Driving on the street or roadway without turn signals, lights, reflective markings, or a slow moving vehicle emblem is dangerous and can lead to accidents causing personal injury.

Do not drive machine on a public street or roadway.

Loading Machines

Use extreme caution when loading units on trailers or trucks. One full width ramp that is wide enough to extend beyond the rear tires is recommended instead of individual ramps for each side of the unit (Figure 28). The lower rear section of the tractor frame extends back between the rear wheels and serves as a stop for tipping backward. Having a full width ramp provides a surface for the frame members to contact if the unit starts to tip backward. If it is not possible to use one full width ramp, use enough individual ramps to simulate a full width continuous ramp.

The ramp should be long enough so that the angles do not exceed 15 degrees (Figure 28). A steeper angle may cause mower components to get caught as the unit moves from ramp to trailer or truck. Steeper angles may also cause the unit to tip backward. If loading on or near a slope, position the trailer or truck so it is on the down side of the slope and the ramp extends up the slope. This will minimize the ramp angle. The trailer or truck should be as level as possible.

Important: Do Not attempt to turn the unit while on the ramp; you may lose control and drive off the side.

Avoid sudden acceleration when driving up a ramp and sudden deceleration when backing down a ramp. Both maneuvers can cause the unit to tip backward.

Loading a unit onto a trailer or truck increases the possibility of backward tip-over and could cause serious injury or death.

- **Use extreme caution when operating a unit on a ramp.**
- **Use only a single, full width ramp; Do Not use individual ramps for each side of the unit.**
- **If individual ramps must be used, use enough ramps to create an unbroken ramp surface wider than the unit.**
- **Do not exceed a 15 degree angle between ramp and ground or between ramp and trailer or truck.**
- **Avoid sudden acceleration while driving unit up a ramp to avoid tipping backward.**
- **Avoid sudden deceleration while backing unit down a ramp to avoid tipping backward.**

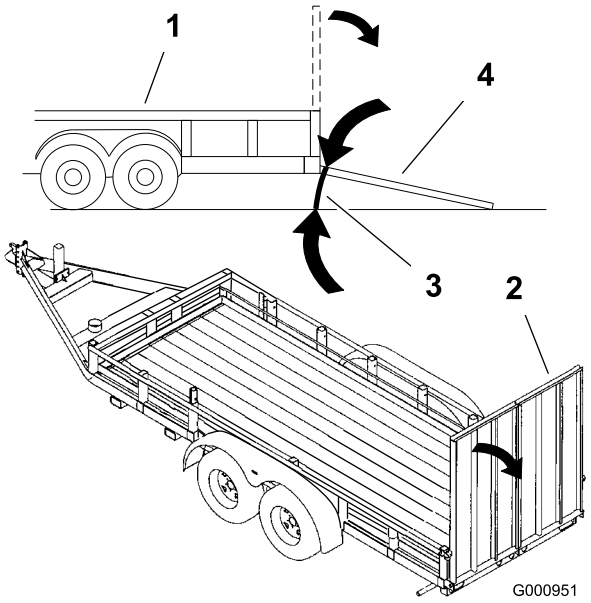

Figure 28

1. Trailer
2. Full width ramp
3. Not greater than 15 degrees
4. Full width ramp—side view

Operating Tips

Fast Throttle Setting

For best mowing and maximum air circulation, operate the engine at the fast throttle position. Air is required to thoroughly cut grass clippings, so do not set the height-of-cut so low as to totally surround the mower by uncut grass. Always try to have one side of the mower free from uncut grass, which allows air to be drawn into the mower.

Cutting a Lawn for the First Time

Cut grass slightly longer than normal to ensure the cutting height of the mower does not scalp any uneven ground. However, the cutting height used in the past is generally the best one to use. When cutting grass longer than six inches tall, you may want to cut the lawn twice to ensure an acceptable quality of cut.

Cut 1/3 of the Grass Blade

It is best to cut only about 1/3 of the grass blade. Cutting more than that is not recommended unless grass is sparse, or it is late fall when grass grows more slowly.

Mowing Direction

Alternate mowing direction to keep the grass standing straight. This also helps disperse clippings which enhances decomposition and fertilization.

Mow at Correct Intervals

Normally, mow every four days. But remember, grass grows at different rates at different times. So to maintain the same cutting height, which is a good practice, mow more often in early spring. As the grass growth rate slows in mid summer, mow less frequently. If you cannot mow for an extended period, first mow at a high cutting height; then mow again two days later at a lower height setting.

Cutting Speed

To improve cut quality, use a slower ground speed in certain conditions.

Avoid Cutting Too Low

If the cutting width of the mower is wider than the mower you previously used, raise the cutting height to ensure that uneven turf is not cut too short.

Long Grass

If the grass is ever allowed to grow slightly longer than normal, or if it contains a high degree of moisture, raise the cutting height higher than usual and cut the grass at this setting. Then cut the grass again using the lower, normal setting.

When Stopping

If the machine's forward motion must be stopped while mowing, a clump of grass clippings may drop onto your lawn. To avoid this, move onto a previously cut area with the blades engaged.

Keep the Underside of the Mower Clean

Clean clippings and dirt from the underside of the mower after each use. If grass and dirt build up inside the mower, cutting quality will eventually become unsatisfactory.

Blade Maintenance

Maintain a sharp blade throughout the cutting season because a sharp blade cuts cleanly without tearing or shredding the grass blades. Tearing and shredding turns grass brown at the edges, which slows growth and

increases the chance of disease. Check the cutter blades daily for sharpness, and for any wear or damage. File down any nicks and sharpen the blades as necessary. If a blade is damaged or worn, replace it immediately with a genuine TORO replacement blade.

Maintenance

Recommended Maintenance Schedule(s)

Maintenance Service Interval	Maintenance Procedure
After the first 8 hours	• Check the hydraulic fluid level.
After the first 25 hours	• Change the hydraulic filter.
After the first 50 hours	• Change the engine oil. • Change the engine oil filter.
After the first 100 hours	• Change gear box oil.
Before each use or daily	• Check the engine oil. • Check the engine coolant level. • Clean the engine oil cooler. • Check the mower blades. • Clean the mower deck.
Every 25 hours	• Grease the mower deck and spindles. • Grease the mower belt idler arm. • Grease the pump belt idler arm. • Grease the drive belt idler arm. • Grease the brake lever. • Check the hydraulic fluid level.
Every 50 hours	• Check the tire pressure. or monthly, whichever occurs first. • Check the PTO drive belt. • Check the pump drive belt. • Check the alternator belt.
Every 100 hours	• Change the engine oil. • Check the wheel hub slotted nut. • Check the gear box oil level. • Check the cooling system hoses. • Inspect the belts for cracks and wear. • Check the hydraulic hoses.
Every 150 hours	• Lubricate the machine with light oil (Refer to Lubrication).
Every 200 hours	• Change the engine oil filter. • Grease the brake pivot.
Every 250 hours	• Check and/or replace the air filter (more often in dirty or dusty conditions).
Every 400 hours	• Replace the fuel filter or yearly, whichever occurs first.
Every 500 hours	• Adjust the caster pivot bearing. • Adjust the electric clutch.
Yearly	• Grease the front caster pivots (more often in dirty or dusty conditions). • Change the gear box oil. • Change the engine coolant. • Change the hydraulic filter and oil.

Important: **Refer to your *Engine Operator's Manual* for additional maintenance procedures.**

If you leave the key in the ignition switch, someone could accidently start the engine and seriously injure you or other bystanders.

Remove the key from the ignition and disconnect the wire from the spark plug(s) before you do any maintenance. Set the wire aside so that it does not accidentally contact the spark plug.

Lubrication

Greasing and Lubrication

Lubricate the machine when shown on the Check Service Reference Aid decal (Figure 29). Grease more frequently when operating conditions are extremely dusty or sandy.

Grease Type: General-purpose grease.

How to Grease

1. Disengage the PTO, move the motion control levers to the neutral locked position and set the parking brake.
2. Stop the engine, remove the key, and wait for all moving parts to stop before leaving the operating position.
3. Clean the grease fittings with a rag. Make sure to scrape any paint off the front of the fitting(s).
4. Connect a grease gun to the fitting. Pump grease into the fittings until grease begins to ooze out of the bearings.
5. Wipe up any excess grease.

Greasing the Front Caster Pivots

Service Interval: Yearly

Lubricate the front caster pivots once a year.

1. Remove the dust cap and adjust the caster pivots. Keep the dust cap off until greasing is done. Refer to Adjusting the Caster Pivot Bearing in Drive System Maintenance , page 39.
2. Remove the hex plug. Thread a grease zerk into the hole.
3. Pump grease into the zerk until it oozes out around the top bearing.
4. Remove the grease zerk in the hole. Install the hex plug and cap.

Where to Add Grease

Lubricate the grease fittings as shown on the Check Service Reference Aid decal (Figure 29).

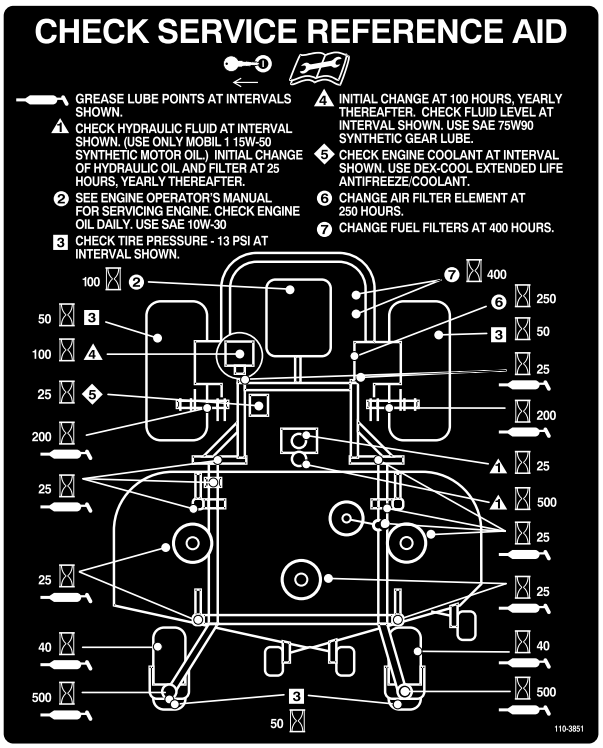

G000965

Figure 29

Where to Add Light Oil or Spray Lubrication

Service Interval: Every 150 hours

Lubricate the machine in the following areas with spray type lubricant or light oil.

- Seat switch actuator.
- Brake handle pivot.
- Brake rod bushings.
- Motion control bronze bushings.

Greasing the Mower Deck and Belt Idlers

Service Interval: Every 25 hours—Grease the mower deck and spindles.

Every 25 hours—Grease the mower belt idler arm.

Every 25 hours—Grease the pump belt idler arm.

Every 25 hours—Grease the drive belt idler arm.

Grease with No. 2 general purpose lithium base or molybdenum base grease.

Important: Make sure cutting unit spindles are full of grease weekly.

1. Disengage the PTO, move the motion control levers to the neutral locked position and set the parking brake.
2. Stop the engine, remove the key, and wait for all moving parts to stop before leaving the operating position.
3. Remove the belt covers.
4. Grease the three spindle bearings under the pulleys until grease comes out the lower seals (Figure 30).
5. Grease the idler arm on the mower deck (Figure 30).
6. Grease the fittings on the push arms (Figure 30).

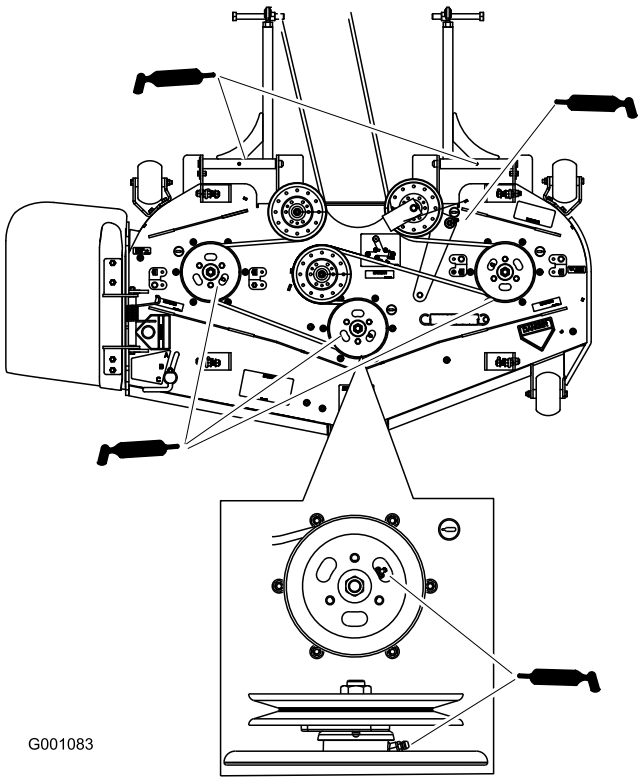

Figure 30

7. Grease the PTO drive belt idler arm (Figure 31).
8. Grease the pump belt idler arm (Figure 31).

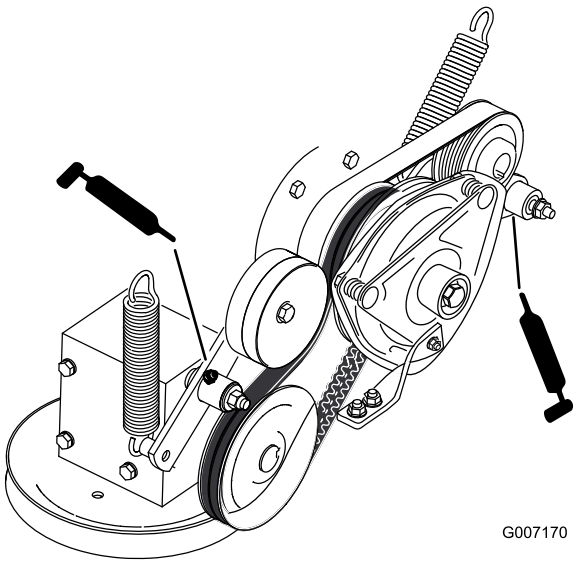

Figure 31

Engine Maintenance

Servicing the Air Cleaner

Note: Check the filters more frequently if operating conditions are extremely dusty or sandy.

Removing the Air Filter

Service Interval: Every 250 hours

1. Disengage the PTO, move the motion control levers to the neutral locked position and set the parking brake.
2. Stop the engine, remove the key, and wait for all moving parts to stop before leaving the operating position.
3. Release the latches on the air cleaner and pull the air cleaner cover off of the air cleaner body (Figure 32).
4. Clean the inside of the air cleaner cover with compressed air.
5. Gently slide the filter out of the air cleaner body (Figure 32). Avoid knocking the filter into the side of the body.
6. Inspect the filter for damage by looking into the filter while shining a bright light on the outside of the filter. Holes in the filter will appear as bright spots. If the filter is damaged discard it.

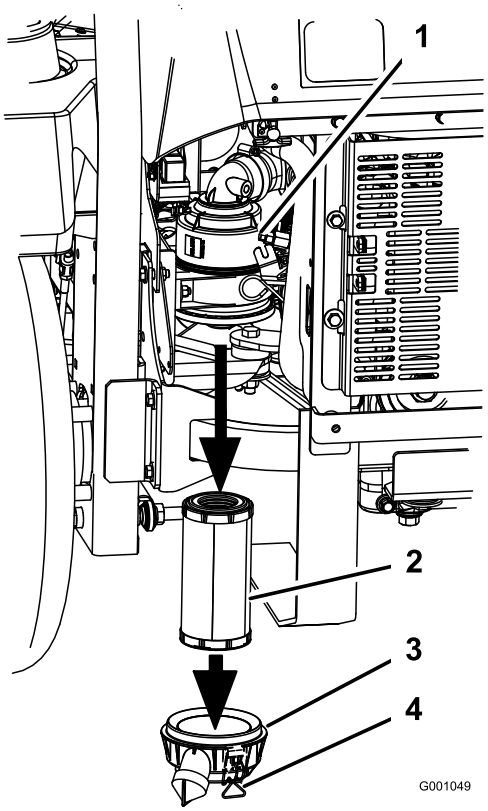

Figure 32

1. Air filter body
2. Air filter
3. Air cleaner cover
4. Latches

Installing the Air Filter

1. If installing a new filter, check the filter for shipping damage. Do not use a damaged filter.
2. Carefully slide the filter into the filter body (Figure 33). Ensure that it is fully seated by pushing on the outer rim of the filter while installing it.

   Important: Do not press on the soft inside area of the filter.
3. Install the air cleaner cover and secure the latches (Figure 33).

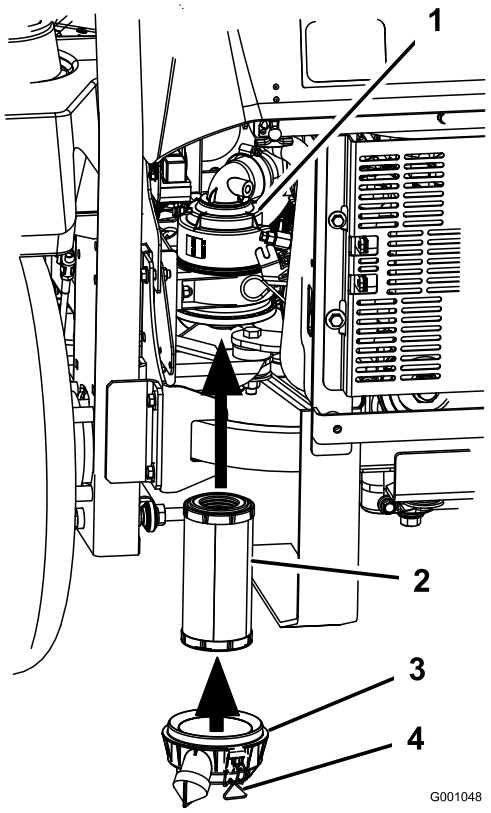

Figure 33

1. Air filter body
2. Air filter
3. Air cleaner cover
4. Latches

Servicing the Engine Oil

Oil Type: High-quality detergent oil classified API Service CD or higher for diesel engines. Do not use special additives with recommended oils.

Crankcase Capacity: 3.9 quarts (3.7 liters)

Viscosity: See the table below:

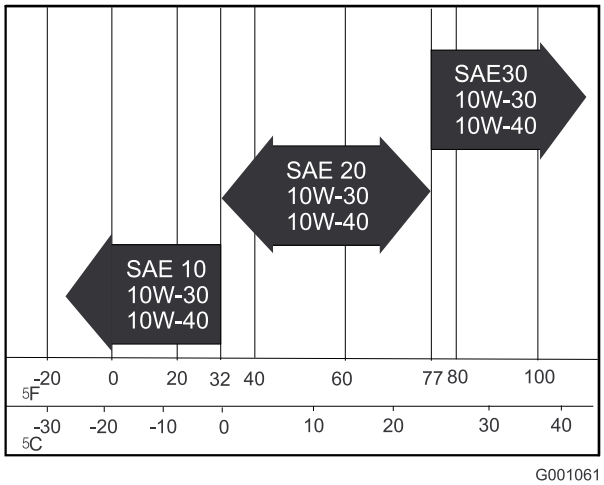

Figure 34

Checking the Engine Oil Level

Service Interval: Before each use or daily

Note: Check the oil when the engine is cold.

1. Disengage the PTO, move the motion control levers to the neutral locked position and set the parking brake.
2. Stop the engine, remove the key, and wait for all moving parts to stop before leaving the operating position.
3. Clean around the oil dipstick (Figure 35) so dirt cannot fall into the filler hole and damage the engine.
4. Pull the oil dipstick out and wipe the metal end clean (Figure 35).
5. Slide the oil dipstick fully into the filler tube. Pull the dipstick out and look at the metal end (Figure 35). If the oil level is low, slowly pour only enough oil into the fill hole to raise the level to the full mark.

Important: Do not overfill the crankcase with oil because this may cause engine damage. Do not run the engine with oil below the low mark because the engine may be damaged as a result.

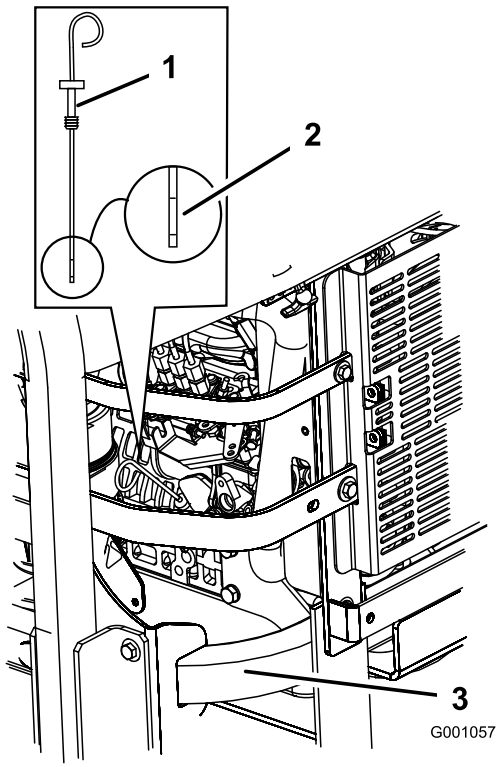

Figure 35

1. Oil dipstick
2. Metal end
3. Rear left side of machine

Changing the Engine Oil

Service Interval: After the first 50 hours

Every 100 hours

1. Start the engine and let it run for five minutes. This warms the oil so it drains better.
2. Park the machine on a level surface.
3. Disengage the PTO, move the motion control levers to the neutral locked position and set the parking brake.
4. Stop the engine, remove the key, and wait for all moving parts to stop before leaving the operating position.
5. Place a pan below the oil drain. Remove the drain plug and let the oil drain completely (Figure 36).
6. Remove the oil filler cap from the top of the engine (Figure 38). This will help the oil to drain.
7. Install the drain plug and tighten it to 25-1/2 ft-lb (35 N•m).

Note: Dispose of the used oil at a recycling center.

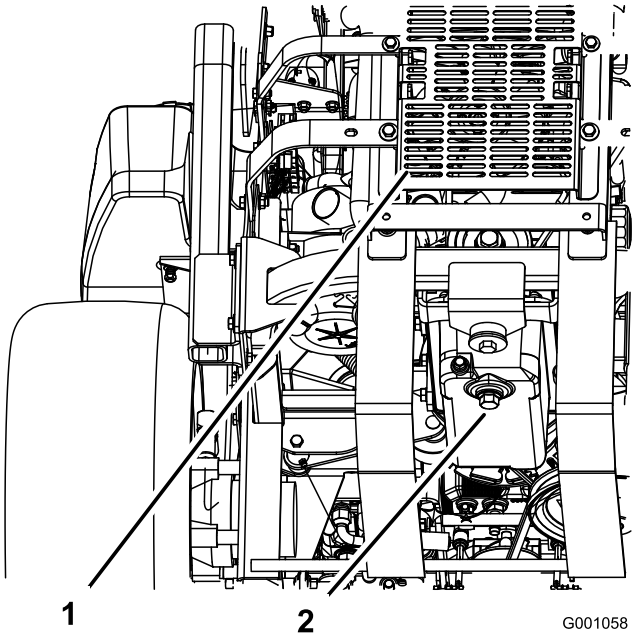

Figure 36

1. Back of machine
2. Drain plug

Adding Engine Oil

1. Tilt the seat forward, loosen the bolts and remove the front engine panel (Figure 37).

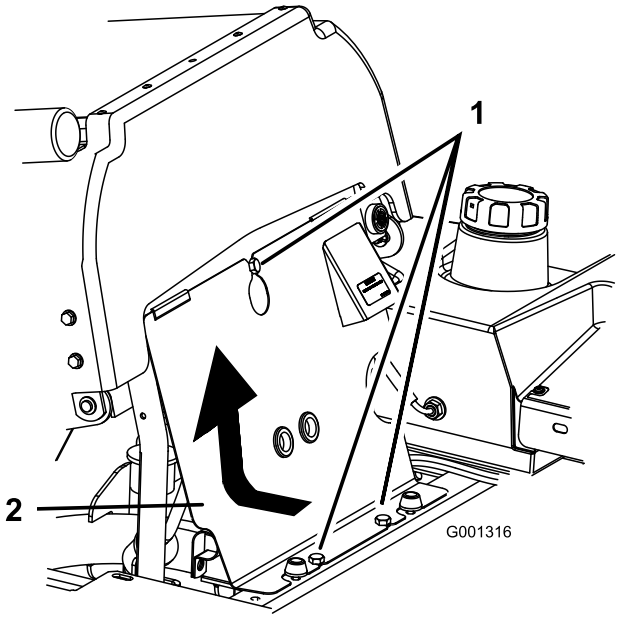

Figure 37

1. Bolt
2. Front engine panel

2. Remove the oil filler cap and the dipstick (Figure 38).

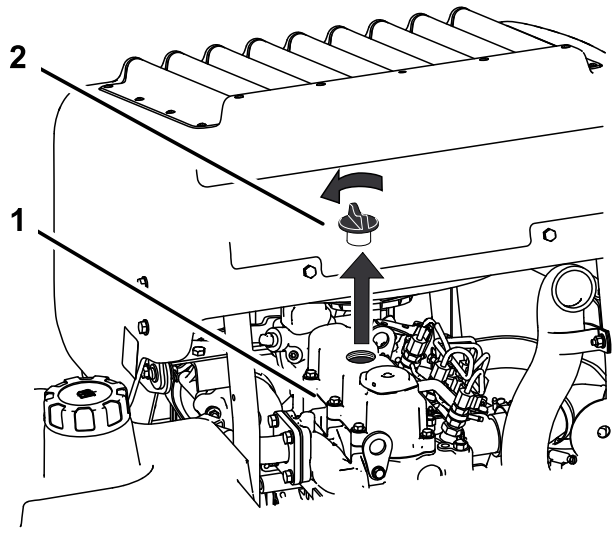

Figure 38

1. Engine
2. Oil fill cap

3. To add oil to the engine, locate and use a hose and funnel for adding oil (Figure 39).
4. Add oil slowly, checking the level with the dipstick frequently until the level reaches the upper hole on the dipstick. For the correct oil type and viscosity to use in different temperature conditions, refer to Servicing the Engine Oil in Engine Maintenance , page 32,).

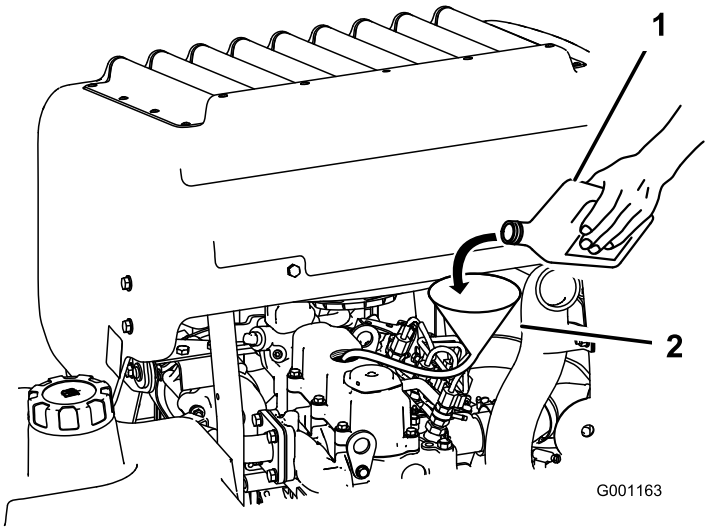

Figure 39

1. Engine oil
2. Funnel and hose

Important: Add the oil very slowly and do not block the opening of the filler hole (Figure 40). If you add oil too fast or block the hole, the oil could back up and foul the air intakes, causing engine damage.

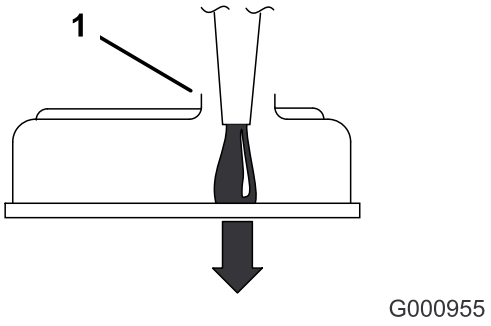

Figure 40

1. Note the clearance left in the filler opening.

5. Replace the dipstick and install the front engine panel.
6. Start the engine and run it at idle for 5 minutes.
7. Shut off the engine.
8. Wait 3 minutes and check the oil level.
9. Add oil, if required, to bring the level to the upper hole on the dipstick.
10. Replace the dipstick and , filler cap, and the front engine panel.
11. Check for leaks.

Important: Do not overfill the crankcase with oil because this may cause engine damage.

Changing the Engine Oil Filter

Service Interval: After the first 50 hours

Every 200 hours

1. Drain the oil from the engine; refer to Changing the Engine Oil.

   Place a drip pan beneath the oil drip tray to receive oil from the oil filter and oil passages in the engine.
2. Turn the filter counterclockwise to remove it (Figure 41 and Figure 42).

   Note: Dispose of the oil filter properly. Recycle in accordance with local codes.
3. Before installing the filter, lightly oil the gasket on the filter with fresh, clean oil. Screw the filter on by hand until the gasket contacts the oil filter adapter. Tighten 1/2 to 3/4 turn more.
4. Add oil; refer to Adding Engine Oil.

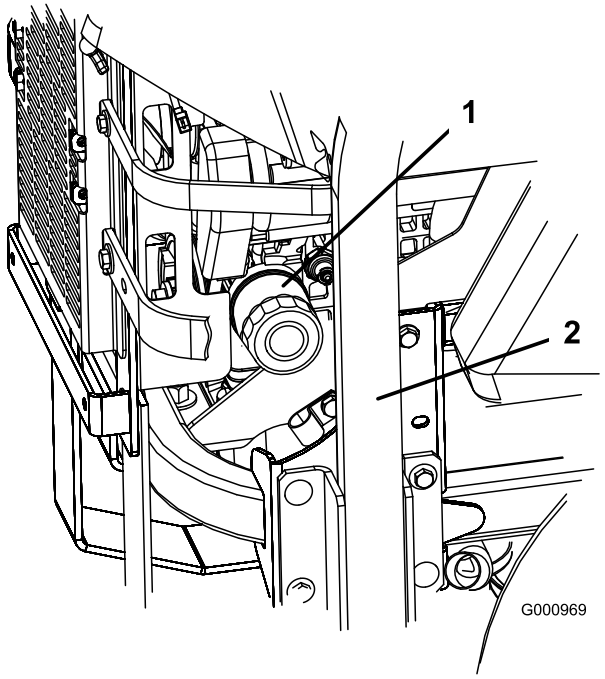

Figure 41

1. Oil filter
2. Right side of machine

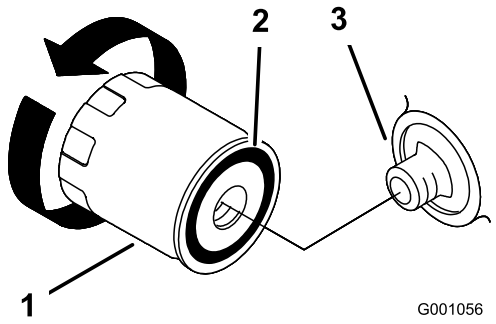

Figure 42

1. Oil filter
2. Gasket
3. Adapter

Fuel System Maintenance

Servicing the Fuel Filter

Replacing the Fuel Filter

Service Interval: Every 400 hours or yearly, whichever occurs first.

Replace the fuel filter more frequently under extremely dusty or dirty conditions.

Ensure that an Authorized Service Dealer replaces the fuel filter and any components for the fuel system.

Use of improper components can result in system failure, fuel leakage and possible explosion.

- **Ensure that an Authorized Service Dealer replace the fuel filter and any components for the fuel system.**
- **Use only approved fuel lines, hose clamps and fuel filters for high pressure systems.**

Servicing the Fuel Tank

Do not attempt to drain the fuel tank because fuel line components require special tools to install them. Ensure that an Authorized Service Dealer drains the fuel tank and services any components of the fuel system.

Electrical System Maintenance

Servicing the Battery

Warning

CALIFORNIA
Proposition 65 Warning

Battery posts, terminals, and related accessories contain lead and lead compounds, chemicals known to the State of California to cause cancer and reproductive harm. Wash hands after handling.

Battery electrolyte contains sulfuric acid which is a deadly poison and causes severe burns.

Do not drink electrolyte and avoid contact with skin, eyes or clothing. Wear safety glasses to shield your eyes and rubber gloves to protect your hands.

Removing the Battery

Battery terminals or metal tools could short against metal machine components causing sparks. Sparks can cause the battery gasses to explode, resulting in personal injury.

- **When removing or installing the battery, do not allow the battery terminals to touch any metal parts of the machine.**
- **Do not allow metal tools to short between the battery terminals and metal parts of the machine.**

Incorrect battery cable routing could damage the machine and cables causing sparks. Sparks can cause the battery gasses to explode, resulting in personal injury.

- **Always Disconnect the negative (black) battery cable before disconnecting the positive (red) cable.**
- **Always Reconnect the positive (red) battery cable before reconnecting the negative (black) cable.**

1. Disengage the PTO, move the motion control levers to the neutral locked position and set the parking brake.
2. Stop the engine, remove the key, and wait for all moving parts to stop before leaving the operating position.
3. Unlatch the seat and tilt the seat up.
4. First disconnect the negative battery cable from the negative (-) battery terminal (Figure 43).
5. Slide the red terminal boot off the positive (red) battery terminal. Then remove the positive (red) battery cable (Figure 43).

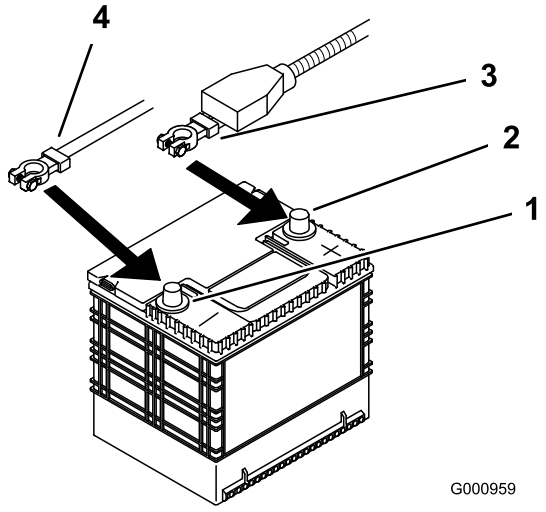

Figure 43

1. Negative Battery Post
2. Positive Battery Post
3. Red (+) cable
4. Black (-) cable

6. Remove both wing nuts (1/4 inch) securing the battery clamp (Figure 44).
7. Remove the two bolts holding the hydraulic tank in place (Figure 44).
8. Slide the hydraulic tank away from the battery.
9. Remove the battery.

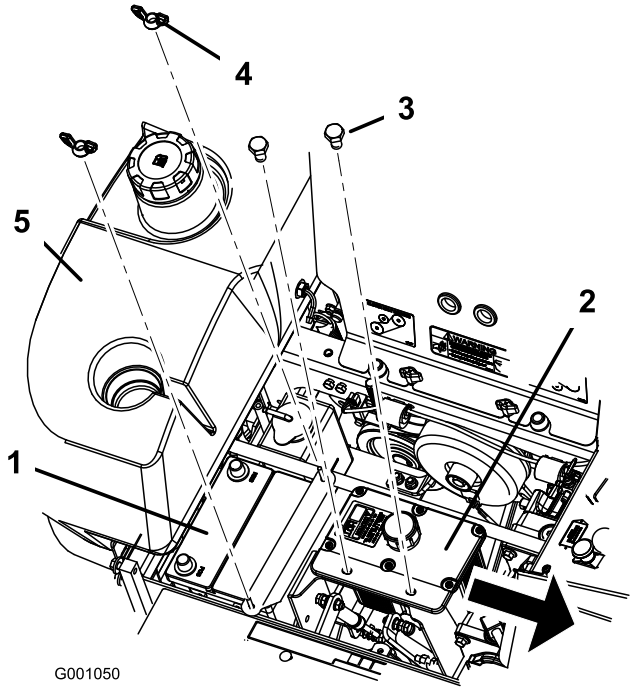

Figure 44

1. Battery
2. Hydraulic tank
3. Bolts
4. Wing nut
5. Right side fuel tank

Installing the Battery

1. Position battery in the tray with the terminal posts opposite from the hydraulic tank (Figure 44).
2. First, install the positive (red) battery cable to positive (+) battery terminal.
3. Then install the negative battery cable and ground wire to the negative (-) battery terminal.
4. Secure the cables with 2 bolts (1/4 x 3/4 inch), 2 washers (1/4 inch), and 2 locknuts (1/4 inch) (Figure 43).
5. Slide the red terminal boot onto the positive (red) battery post.
6. Secure battery with J-bolts, hold down clamp and 2 washers (1/4 inch), and 2 wing nuts (1/4 inch) (Figure 44).

Charging the Battery

Charging the battery produces gasses that can explode.

Never smoke near the battery and keep sparks and flames away from battery.

Important: Always keep the battery fully charged (1.265 specific gravity). This is especially important to prevent battery damage when the temperature is below 32°F (0°C).

1. Make sure the filler caps are installed in battery. Charge battery for 10 to 15 minutes at 25 to 30 amps or 30 minutes at 10 amps.
2. When the battery is fully charged, unplug the charger from the electrical outlet, then disconnect the charger leads from the battery posts (Figure 45).
3. Install the battery in the machine and connect the battery cables, refer to Installing the Battery.

Note: Do not run the machine with the battery disconnected, electrical damage may occur.

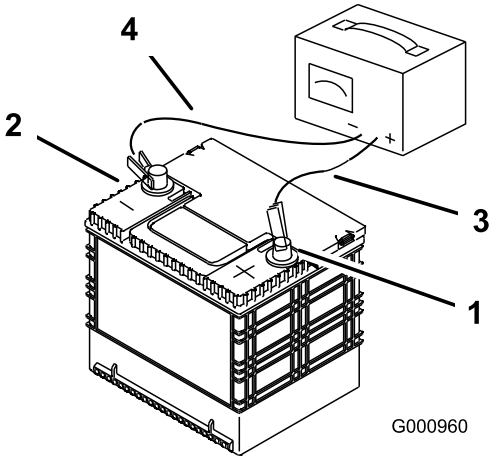

Figure 45

1. Positive Battery Post
2. Negative Battery Post
3. Red (+) Charger Lead
4. Black (-) Charger Lead

Servicing the Fuses

The electrical system is protected by fuses. It requires no maintenance; however, if a fuse blows check the component/circuit for malfunction or a short.

Fuses:

- Ignition, F1-30 amp, blade-type
- Radiator Fan, F2-40 amp, blade-type

1. Unlatch the engine hood and raise the engine hood to gain access to fuse holder (Figure 46).
2. To replace the fuses, pull out on the fuse to remove it.
3. Install a new fuse (Figure 46).

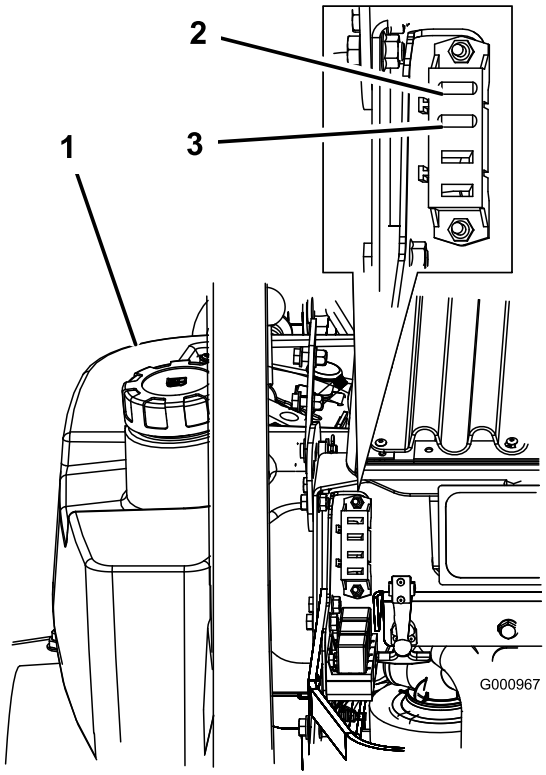

Figure 46

1. Left side fuel tank
2. Ignition-30 amp
3. Radiator fan-40amp

Drive System Maintenance

Adjusting the Tracking

The machine has a knob for adjusting the tracking located under the seat.

Important: Adjust the handle neutral and hydraulic pump neutral before adjusting the tracking. Refer to Adjusting the Handle Neutral in Controls System Maintenance , page 48 and Adjusting the Hydraulic Pump Neutral in Hydraulic System Maintenance , page 49.

1. Push both control levers forward the same distance.
2. Check if the machine pulls to one side. If it does, stop the machine and set the parking brake.
3. Unlatch the seat and tilt the seat forward to access the tracking knob.

   Note: Determine the left and right sides of the machine from the normal operating position.
4. To make the machine go right, turn the knob towards the rightside of the machine. Refer to Figure 47.
5. To make the machine go left, turn the knob towards the leftside of the machine. Refer to Figure 47.
6. Repeat adjustment until the tracking is correct.

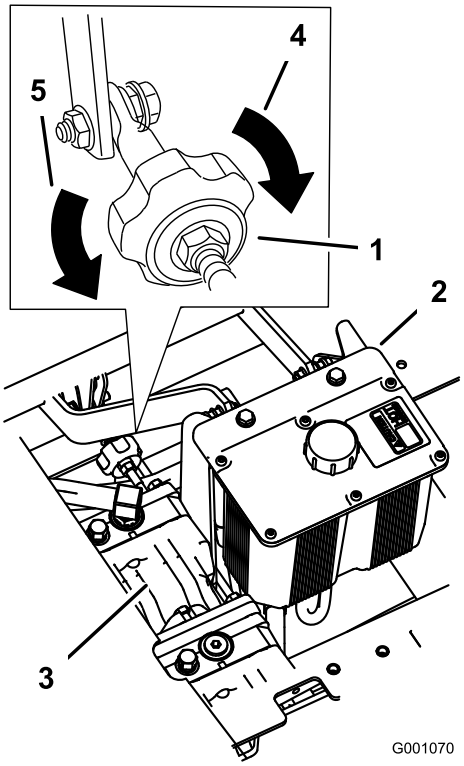

Figure 47

1. Tracking knob
2. Hydraulic tank
3. Hydraulic pumps
4. Turn this way to track right
5. Turn this way to track left

Checking the Tire Pressure

Service Interval: Every 50 hours or monthly, whichever occurs first.

Check the pressure at the valve stem (Figure 48).

Maintain the air pressure in the rear tires at 13 psi (90 kPa). Uneven tire pressure can cause uneven cut. Check the tires when they are cold to get the most accurate pressure reading.

Note: The front tires are semi-pneumatic tires and do not require air pressure maintenance.

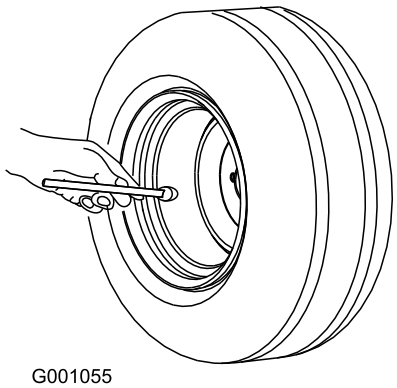

Figure 48

Checking the Wheel Hub Slotted Nut

Service Interval: Every 100 hours

The slotted nut needs to be torqued to 125 ft-lb (170 N•m).

1. Disengage the PTO, move the motion control levers to the neutral locked position and set the parking brake.
2. Stop the engine, remove the key, and wait for all moving parts to stop before leaving the operating position.
3. Remove the cotter pin.
4. Torque the slotted nut to 125 ft-lb (170 N•m) (Figure 49).

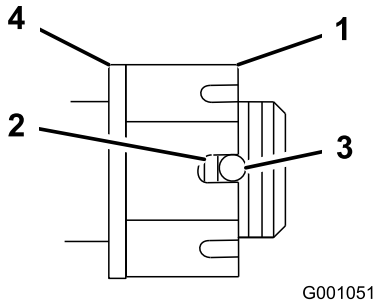

Figure 49

1. Slotted Nut
2. Two threads or less showing
3. Hole in threaded shaft
4. Washer (if needed)

5. Check the distance from bottom of slot in nut to inside edge of hole. Two threads or less should be showing (Figure 49).
6. If more than two threads are showing remove nut and install washer between hub and nut.
7. Torque the slotted nut to 125 ft-lb. (170 N•m) (Figure 49).
8. Tighten the nut until the next set of slots line up with the hole in the shaft (Figure 49).
9. Replace the cotter pin.

Adjusting the Caster Pivot Bearing

Service Interval: Every 500 hours

1. Disengage the PTO, move the motion control levers to the neutral locked position and set the parking brake.
2. Stop the engine, remove the key, and wait for all moving parts to stop before leaving the operating position.

3. Remove the dust cap from caster and tighten lock nut (Figure 50).
4. Tighten the locknut until the spring washers are flat and then back off a 1/4 turn to properly set the pre-load on the bearings (Figure 50).

   Important: Make sure spring washers are installed correctly as shown in Figure 50.

5. Install the dust cap (Figure 50).

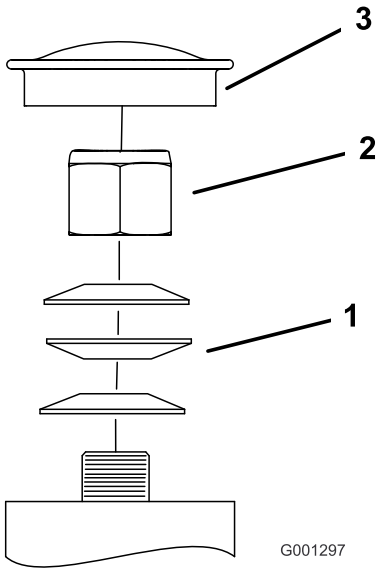

Figure 50

1. Spring Washers
2. Lock Nut
3. Dust Cap

Servicing the Gear Box

Checking the Gear Box Oil Level

Service Interval: Every 100 hours

Use SAE 75W–90 Synthetic Gear Lube.

1. Park the machine on a level surface.
2. Disengage the PTO, move the motion control levers to the neutral locked position and set the parking brake.
3. Stop the engine, remove the key, and wait for all moving parts to stop before leaving the operating position.
4. Remove the side or rear plug on the gear box. (Figure 51).
5. The oil should be up to the opening of the gear box.
6. Add oil if needed to bring it to the correct level.

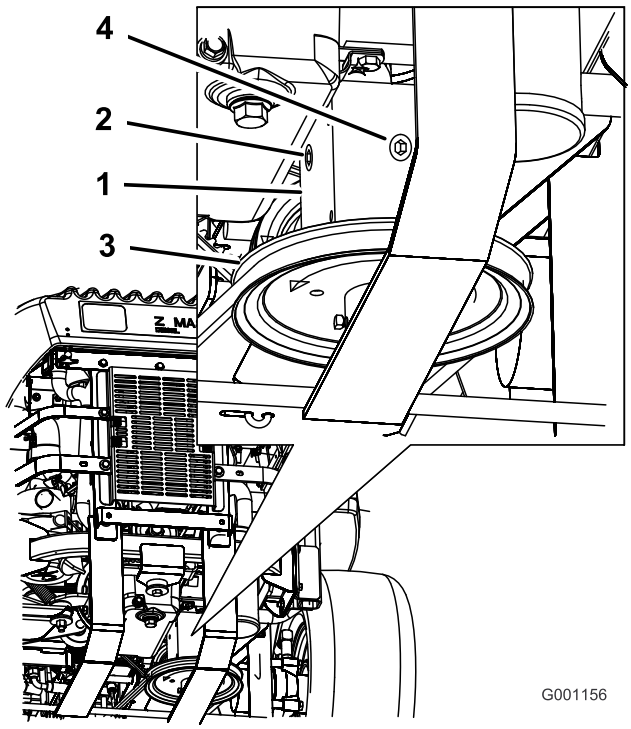

Figure 51

1. Gear box
2. Side plug
3. Rear plug
4. Pulley

Changing the Gear Box Oil

Service Interval: After the first 100 hours

Yearly

Contact an Authorized Service Dealer to change the gear box oil.

Adjusting the Electric Clutch

Service Interval: Every 500 hours

The clutch is adjustable to ensure proper engagement and proper braking.

1. Disengage the PTO, move the motion control levers to the neutral locked position and set the parking brake.
2. Stop the engine, remove the key, and wait for all moving parts to stop before leaving the operating position.
3. Unlatch the seat and tip it forward.
4. Loosen the front engine panel knobs and remove the panel.
5. Pull up on the spring loaded idler pulley for the PTO drive belt and remove the belt from the clutch pulley (Figure 52).

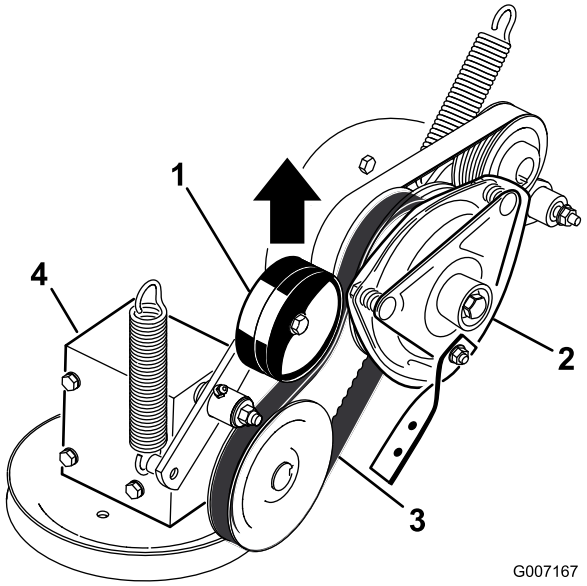

Figure 52

1. Spring loaded idler pulley
2. Clutch
3. PTO drive belt
4. Gear box

6. Unplug the electric connection for the clutch (Figure 53).
7. Remove the two bolts holding the rubber clutch strap to the mower frame (Figure 53).
8. Remove the center bolt holding the clutch to the engine shaft and remove the clutch and key (Figure 53).

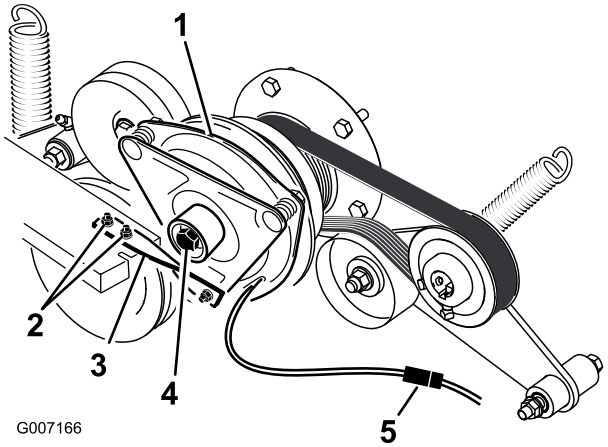

Figure 53

1. Clutch
2. Two bolts and nuts for clutch strap
3. Rubber clutch strap
4. Clutch center bolt
5. Electrical connection

9. Insert a 0.015–0.021 inch (0.381–0.533 mm) feeler gauge through one inspection slot in the side of the assembly. Make sure it is between the armature and the rotor friction surfaces (Figure 54).
10. Tighten the lock nuts until there is slight binding on the feeler gauge but it can be moved easily within the air gap (Figure 54).
11. Repeat this for the remaining slots.
12. Check each slot again and make slight adjustments until the feeler gauge between the rotor and armature with very slight contact between them.

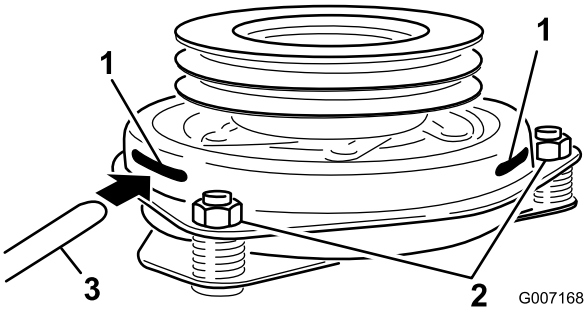

Figure 54

1. Slot
2. Adjusting nut
3. Feeler gauge

13. Install the clutch to the engine shaft with the key.
14. Apply blue Loctite® (or equivalent) to the center bolt.
15. While holding the crank shaft at the back of the machine, install the center bolt and torque it to 50 ft-lbs (68 N-m) (Figure 53).
16. Install the rubber clutch strap to the mower frame with the two previously removed bolts and nuts (Figure 53).
17. Pull up on the spring loaded idler for the PTO drive belt and install it onto the clutch pulley (Figure 52).
18. Plug in the electric connection for the clutch (Figure 53).
19. Install the front engine panel and tighten the knobs.
20. Lower down the seat.

Cooling System Maintenance

Servicing the Cooling System

Discharge of hot pressurized coolant or touching hot radiator and surrounding parts can cause severe burns.

- **Do not remove the radiator cap when the engine is hot. Always allow the engine to cool at least 15 minutes or until the radiator cap is cool enough to touch without burning your hand before removing the radiator cap.**
- **Do not touch radiator and surrounding parts that are hot.**

Rotating shaft and fan can cause personal injury.

- **Do not operate the machine without the covers in place.**
- **Keep fingers, hands and clothing clear of rotating fan and drive shaft.**
- **Shut off the engine and remove the ignition key before performing maintenance.**

Swallowing engine coolant can cause poisoning.

- **Do not swallow engine coolant.**
- **Keep out of reach from children and pets.**

Checking the Engine Coolant Level

Service Interval: Before each use or daily

Every 100 hours

Fluid Type: 50/50 mix of extended life antifreeze/Dex-Cool® and water

Cooling System Capacity: 156 ounces (4.6 l)

Note: Do not open the radiator cap. Doing this may induce air into the cooling system.

1. Position the machine on a level surface, stop the engine, and set the parking brake.
2. Unlatch the seat and tilt the seat up.
3. With the engine cool, check the overflow bottle level. The fluid needs to be up to the bump on the outside of the overflow bottle (Figure 55).
4. If the coolant level is low, add a 50/50 mix of extended life antifreeze/Dex-Cool® and water to the overflow bottle (Figure 55).
5. Add the 50/50 coolant mix to the overflow bottle and fill it to the indicator line on the bottle (Figure 55).

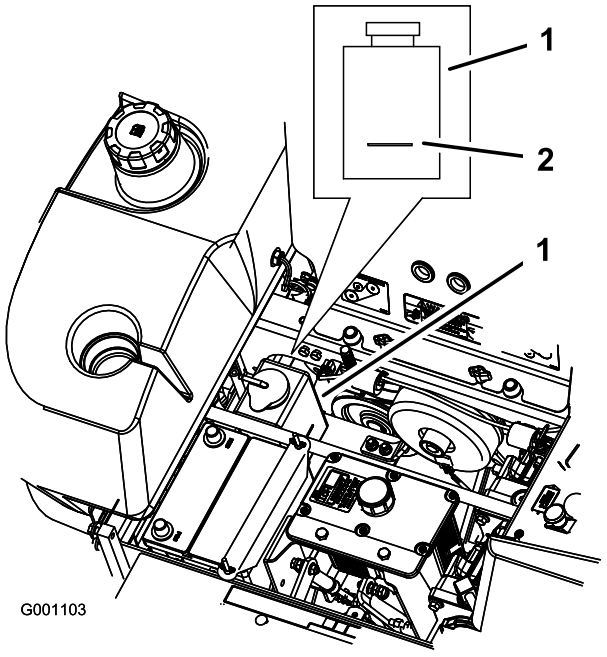

Figure 55

1. Antifreeze overflow bottle
2. Indicator line on side of overflow bottle

Cleaning the Engine Oil Cooler and Radiator Screen

Service Interval: Before each use or daily

Before each use, check and clean the radiator screen and oil cooler. Remove any build-up of grass, dirt or other debris from the oil cooler and radiator screen with compressed air (Figure 56).

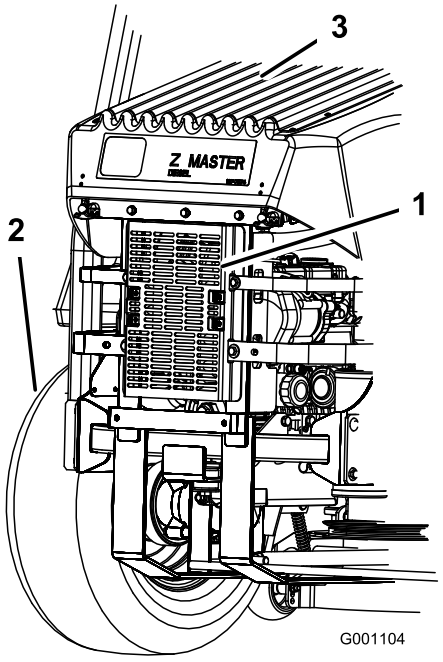

Figure 56

1. Hydraulic oil cooler
2. Left rear tire
3. Radiator screen

Changing the Engine Coolant

Service Interval: Yearly

Have an Authorized Service Dealer change the engine coolant every year.

Brake Maintenance

Adjusting the Parking Brake

Service Interval: Every 25 hours

Every 200 hours

1. Engage the parking brake, lever up.
2. Measure the length of the spring. Measurement should be 2-1/2 inch (64 mm) between the washers (Figure 57).
3. If adjustment is necessary, release the parking brake, loosen the jam nut below the spring and adjust the nut directly below the spring (Figure 57). Turn the nut until the correct measurement is obtained. Turn the nut clockwise to shorten spring length and turn counter-clockwise to lengthen the spring.
4. Tighten the two nuts together.
5. Engage the parking brake, lever up. Check the measurement of the spring again.
6. If adjustment is necessary, repeat the procedures above.
7. Repeat on the opposite side of machine.

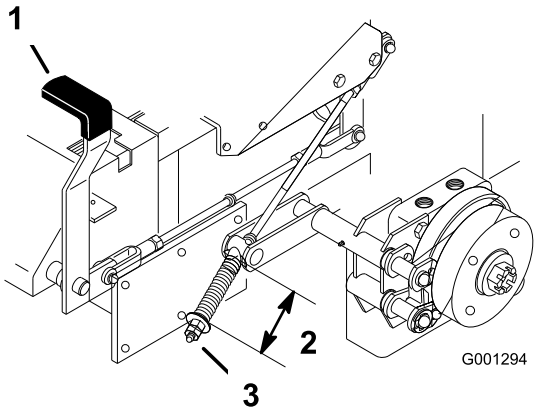

Figure 57

1. Brake lever in engaged position
2. Spring 2–1/2 inch (64 mm)
3. Adjusting nut and jam nut

Belt Maintenance

Inspecting the Belts

Service Interval: Every 100 hours

Check belts for cracks, frayed edges, burn marks, or any other damage. Replace damaged belts.

Replacing the Mower Belt

Squealing when the belt is rotating, blades slipping when cutting grass, frayed belt edges, burn marks and cracks are signs of a worn mower belt. Replace the mower belt if any of these conditions are evident.

1. Disengage the PTO, move the motion control levers to the neutral locked position and set the parking brake.
2. Stop the engine, remove the key, and wait for all moving parts to stop before leaving the operating position.
3. Remove the bolts holding the belt covers and remove the belt covers (Figure 58).
4. Remove the spring and belt guide from the idler arm.
5. Remove the existing belt if needed.
6. Install the new belt around the mower pulleys and the gearbox pulley under the engine (Figure 59).
7. Install spring to the idler arm (Figure 59).
8. Install the belt guide on the spring loaded idler at a 45 degree angle as shown in Figure 59.
9. Install the belt covers by sliding the cover into the tab, install the bolts, and close the latches (Figure 58).

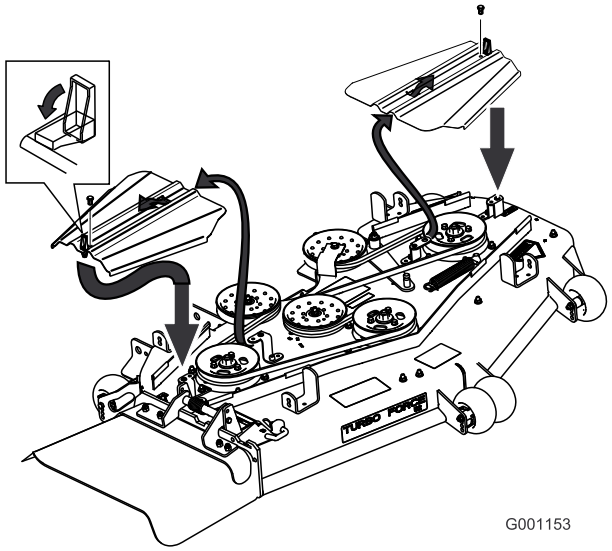

Figure 58

1. Belt cover
2. Latch
3. Bolt
4. Insert slot into the tab

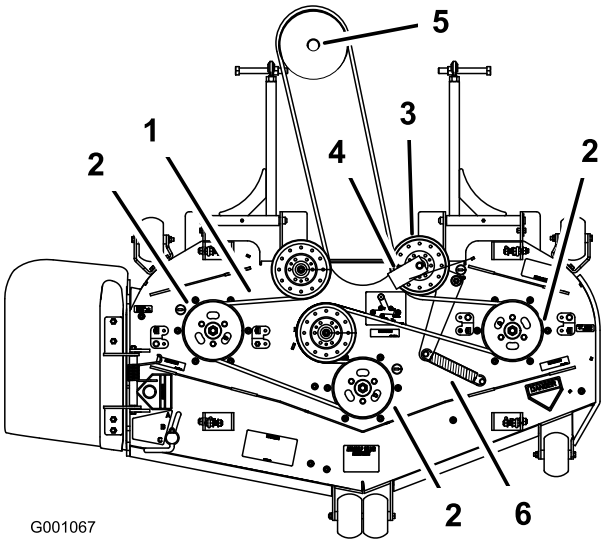

Figure 59

1. Mower belt
2. Mower spindle pulley
3. Mower idler pulley
4. Belt guide
5. Gearbox pulley
6. Spring

Replacing the PTO Drive Belt

Service Interval: Every 50 hours

1. Disengage the PTO, move the motion control levers to the neutral locked position and set the parking brake.
2. Stop the engine, remove the key, and wait for all moving parts to stop before leaving the operating position.
3. Loosen the front engine panel knobs and remove the panel (Figure 60).

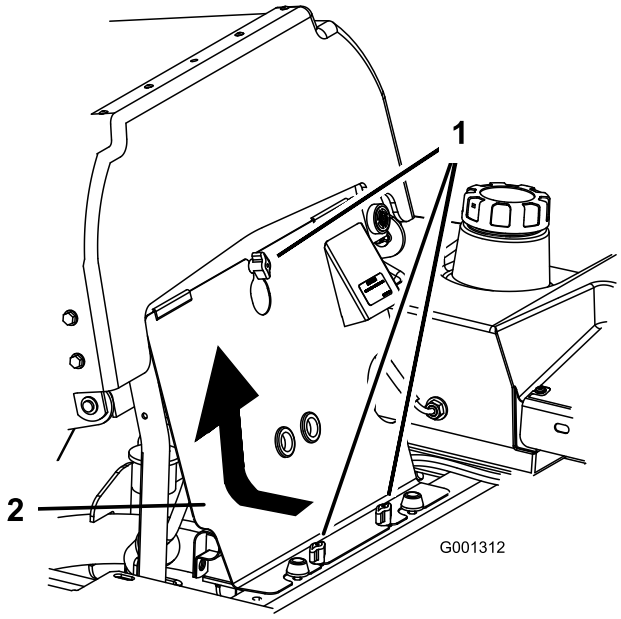

Figure 60

1. Knob
2. Front engine panel

4. Remove the spring from the idler arm (Figure 61).
5. Remove the clutch stop bracket.
6. Remove the old PTO drive belt.
7. Install the PTO drive belt around the clutch pulley and the gearbox pulley (Figure 61).
8. Intall the rubber clutch stop.
9. Install the spring to the idler arm (Figure 61).

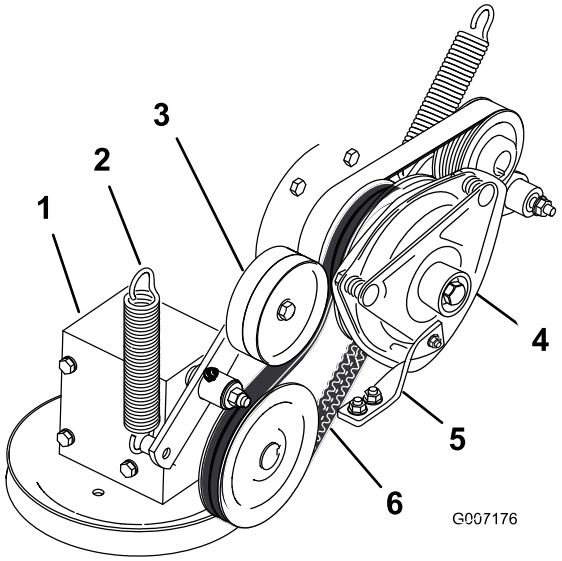

Figure 61

1. Gear box
2. Spring
3. Spring loaded idler pulley
4. Clutch
5. Rubber clutch stop
6. PTO Drive belt

Replacing the Pump Drive Belt

Service Interval: Every 50 hours—Check the pump drive belt.

Note: Remove the PTO drive belt first if the pump drive belt needs to be replaced.

1. Tilt the seat forward and remove the front engine panel.
2. Remove the PTO drive belt.
3. Remove the spring from the idler arm (Figure 62).
4. Install the new belt around the engine and hydro pump pulley (Figure 62).
5. Install the PTO drive belt.
6. Install the spring to the idler arm (Figure 62).

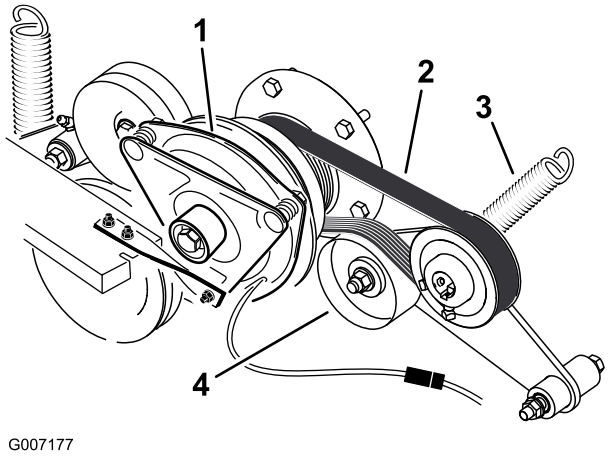

Figure 62

1. Clutch
2. Pump drive belt
3. Spring
4. Spring loaded idler pulley

Replacing and Tensioning the Alternator Belt

Replacing the Alternator Belt

Service Interval: Every 50 hours—Check the alternator belt.

1. Disengage the PTO, move the motion control levers to the neutral locked position and set the parking brake.
2. Stop the engine, remove the key, and wait for all moving parts to stop before leaving the operating position.
3. Remove the 4 bolts holding the oil cooler shield to the rear frame (Figure 63).
4. Remove the 3 bolts holding the engine straps to the side of the machine (Figure 63).

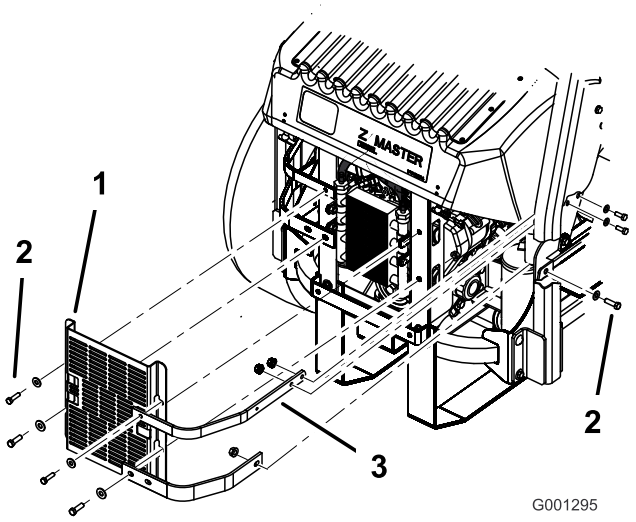

Figure 63

1. Oil cooler shield
2. Bolts
3. Engine straps

5. Remove the 4 bolts holding the oil cooler and position the oil cooler to the side (Figure 64).
6. Remove the 2 bolts holding the fan and fan plate to the machine (Figure 64).

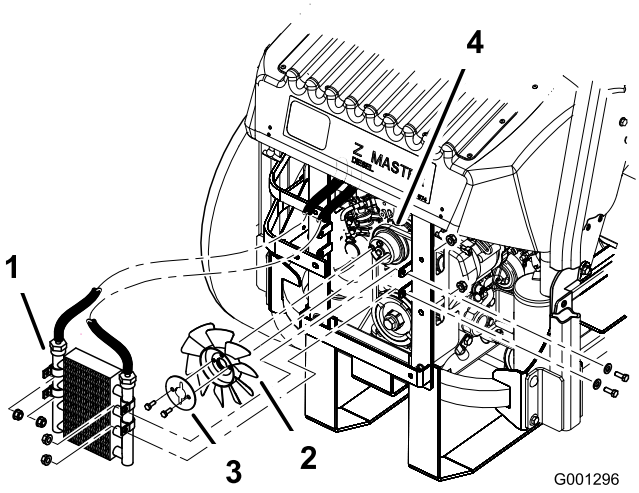

Figure 64

1. Oil cooler
2. Fan
3. Fan plate
4. Alternator belt

7. Loosen the bottom bolt and remove the upper bolt holding the alternator and cover (Figure 65).
8. Rotate the alternator cover to the side and remove the belt from the pulleys and alternator.
9. Install a new belt around the pulleys and the alternator (Figure 65).
10. Install the fan and fan plate to the machine with the 2 bolts previously removed (Figure 64).
11. Install the oil cooler with the 4 bolts previously removed (Figure 64).
12. Install the oil cooler shield and engine straps to the rear frame with the 4 bolts previously removed (Figure 63).
13. Install the engine straps to the side of the machine (Figure 63).
14. Tighten the bottom bolt and install the upper bolt holding the alternator and cover (Figure 65).

Tensioning the Alternator Belt

1. Place a handle between the alternator and cylinder block.
2. Adjust the alternator to the outside until there is 1/4 to 11/32 inch (7 to 9 mm) deflection in the belt between the engine and the alternator pulleys with 22.1 lbs of force (10 kgf) (Figure 65).
3. Tighten the alternator bolts.
4. Check the deflection in the belt again and adjust the belt if needed.
5. If the deflection is correct, tighten the bottom and upper bolt (Figure 65).

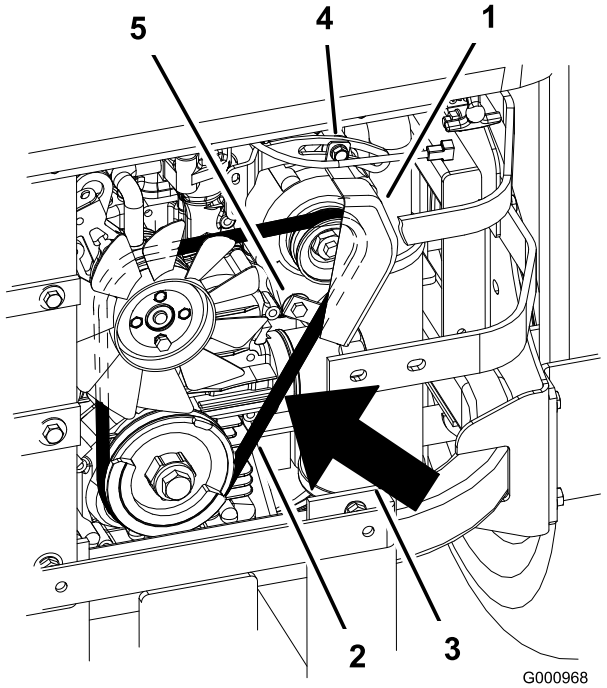

Figure 65

1. Alternator
2. Alternator belt
3. Deflection, 1/4 to 11/32 inch (7 to 9 mm) with 22.1 lbs of force (10 kgf)
4. Top bolt
5. Bottom bolt

Controls System Maintenance

Adjusting the Control Handle Neutral Position

If motion control levers do not align, or move easily into the console notch, adjustment is required. Adjust each lever, spring and rod separately.

Note: Motion control levers must be installed correctly. See Installing the Motion Control Levers in the set up instructions.

1. Disengage the PTO, move the motion control levers to the neutral locked position and set the parking brake.
2. Stop the engine, remove the key, and wait for all moving parts to stop before leaving the operating position.
3. Unlatch the seat and tilt the seat forward.
4. Begin with either the left or right motion control lever.
5. Move the lever to the neutral position but not locked (Figure 66).
6. Pull the lever back until the clevis pin (on arm below pivot shaft) contacts the end of the slot (just beginning to put pressure on the spring) (Figure 66).
7. Check where the control lever is relative to notch in console (Figure 66). It should be centered allowing lever to pivot outward to the neutral lock position.

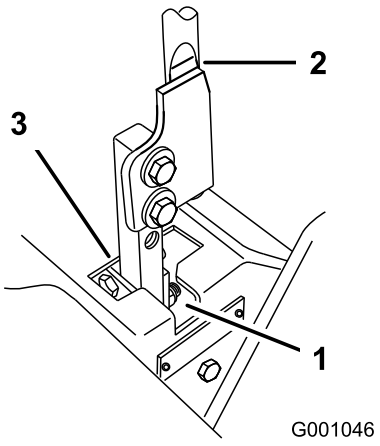

Figure 66

1. Neutral locked position
2. Control lever
3. Neutral potion

8. If adjustment is needed, loosen the nut and jam nut against the yoke (Figure 67).
9. Apply slight rearward pressure on the motion control lever, turn the head of the adjustment bolt in the appropriate direction until the control lever is centered in the neutral lock position (Figure 67).

   Note: Keeping rearward pressure on the lever will keep the pin at the end of the slot and allow the adjustment bolt to move the lever to the appropriate position.
10. Tighten the nut and jam nut (Figure 67).
11. Repeat for the opposite side of the machine.

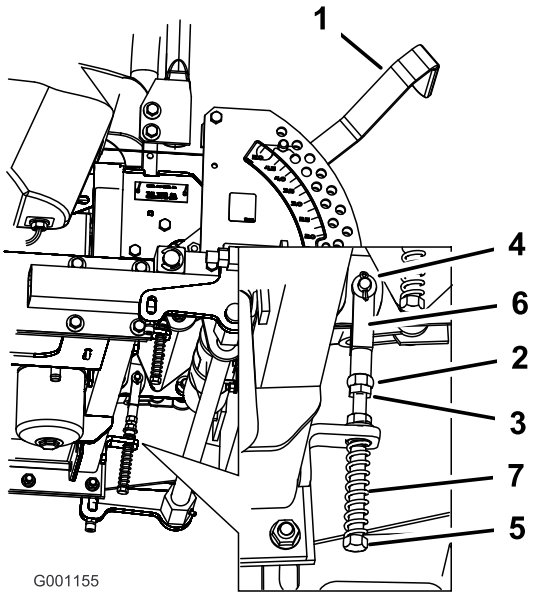

Figure 67

1. Height-of-cut lever
2. Nut against yoke
3. Jam Nut
4. Clevis pin in slot
5. Adjustment bolt
6. Yoke
7. Spring

Hydraulic System Maintenance

Servicing the Hydraulic System

Checking the Hydraulic Fluid Level

Service Interval: After the first 8 hours

Every 25 hours

Fluid Type: Mobil 1 15W-50 synthetic motor oil or equivalent synthetic oil.

Important: Use oil specified or equivalent. Other fluids could cause system damage.

Hydraulic System Oil Capacity: 132 ounces (3.9 l)

Note: There are two ways of checking the hydraulic oil. One is when the oil is warm and one is when the oil is cold. The baffle inside the tank has two levels depending if the oil is warm or cold.

1. Position the machine on a level surface and set the parking brake.
2. Clean the area around filler neck of hydraulic tank (Figure 68).
3. Remove the cap from the filler neck. Look inside to check if there is fluid in the reservoir (Figure 68).
4. If there is no fluid, add fluid to the reservoir until it reaches the cold level of the baffle.
5. Run the machine at low idle for 15 minutes to allow any air to purge out of the system and warm the fluid. Refer to Starting and Stopping the Engine in Operation , page 14.
6. Recheck the fluid level while the fluid is warm. The fluid should be between cold and hot.
7. If required, add fluid to the hydraulic tank.

   Note: The fluid level should be to the top of the hot level of the baffle, when the fluid is hot (Figure 68).
8. Install cap on filler neck.

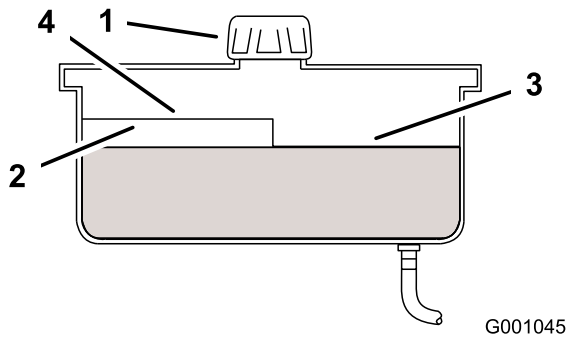

Figure 68

1. Cap
2. Baffle
3. Cold fluid level-full
4. Hot fluid level-full

Hydraulic fluid escaping under pressure can penetrate skin and cause injury.

- **If hydraulic fluid is injected into the skin it must be surgically removed within a few hours by a doctor familiar with this type of injury. Gangrene may result if this is not done.**
- **Keep body and hands away from pin hole leaks or nozzles that eject high pressure hydraulic fluid.**
- **Use cardboard or paper to find hydraulic leaks.**
- **Safely relieve all pressure in the hydraulic system before performing any work on the hydraulic system.**
- **Make sure all hydraulic fluid hoses and lines are in good condition and all hydraulic connections and fittings are tight before applying pressure to hydraulic system.**

Changing the Hydraulic Filter and Oil

Service Interval: After the first 25 hours

Yearly

Use summer filter above 32°F (0°C)

Use winter filter below 32°F (0°C)

Note: At the yearly interval, change the hydraulic oil when the oil filter is changed.

1. Disengage the PTO, move the motion control levers to the neutral locked position and set the parking brake.

2. Stop the engine, remove the key, and wait for all moving parts to stop before leaving the operating position.

   Important: Do not substitute automotive oil filter or severe hydraulic system damage may result.

3. Apply a thin coat hydro fluid to the rubber gasket on the replacement filter (Figure 69).

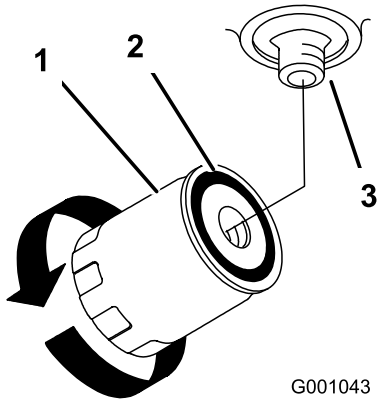

Figure 69

1. Hydraulic filter
2. Gasket
3. Adapter

4. Place drain pan under filter, remove the old filter and wipe the filter adapter gasket surface clean (Figure 70).

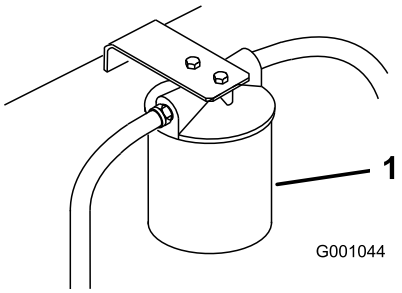

Figure 70

1. Hydraulic filter

5. If changing the oil, allow the hydraulic oil to drain from the tank when the oil filter is removed.
6. Install the replacement hydraulic filter onto the filter adapter. Do not tighten.
7. Fill the hydraulic tank with hydraulic fluid until the fluid overflows the filter and then turn the oil filter clockwise until the rubber gasket contacts the filter adapter, then tighten the filter an additional 1/2 turn (Figure 69).
8. Clean up any spilled fluid.
9. Add fluid to the cold level of the baffle in the hydraulic tank.
10. Start the engine and let it run for about two minutes to purge air from the system. Stop the engine and check for leaks. If one or both wheels will not drive, refer Bleeding Hydraulic System.
11. Recheck the fluid level while the fluid is warm. The fluid should be between cold and hot.
12. If required, add fluid to the hydraulic tank. Do not overfill.

Bleeding the Hydraulic System

The traction system is self bleeding, however, it may be necessary to bleed the system if fluid is changed or after work is performed on the system.

1. Raise rear of the machine so wheels are off the ground and support with jack stands.
2. Start the engine and run at low idle speed. Engage the lever and traction on one side and spin the wheel by hand.
3. When the wheel begins to spin on its own, keep it engaged until wheel drives smoothly. (minimum 2 minutes)
4. Check hydraulic fluid level and add as required to maintain proper level.
5. Repeat this procedure on the opposite wheel.

Checking the Hydraulic Hoses

Service Interval: Every 100 hours

Check the hydraulic hoses for leaks, loose fittings, kinked lines, loose mounting supports, wear, weather and chemical deterioration. Make necessary repairs before operating.

Note: Keep areas around the hydraulic system clean from grass and debris build up.

Hydraulic fluid escaping under pressure can penetrate skin and cause injury.

- **If hydraulic fluid is injected into the skin it must be surgically removed within a few hours by a doctor familiar with this type of injury. Gangrene may result if this is not done.**
- **Keep body and hands away from pin hole leaks or nozzles that eject high pressure hydraulic fluid.**
- **Use cardboard or paper to find hydraulic leaks.**
- **Safely relieve all pressure in the hydraulic system before performing any work on the hydraulic system.**
- **Make sure all hydraulic fluid hoses and lines are in good condition and all hydraulic connections and fittings are tight before applying pressure to hydraulic system.**

Setting the Hydraulic Pump Neutral Position

Note: Adjust the handle neutral first. That needs to be correct before the following adjustment can be made.

This adjustment must be made with drive wheels turning.

Mechanical or hydraulic jacks may fail to support machine and cause a serious injury.

- **Use jack stand when supporting machine.**
- **Do not use hydraulic jacks.**

Engine must be running so motion control adjustment can be performed. Contact with moving parts or hot surfaces may cause personal injury.

Keep hands, feet, face, clothing and other body parts away from rotating parts, muffler and other hot surfaces.

1. Raise the frame and block up the machine so drive wheels can rotate freely.
2. Disconnect the electrical connector from the seat safety switch. Temporarily install a jumper wire across terminals in the wiring harness connector.
3. Unlatch the seat and slide seat forward.
4. Disconnect the seat rod and tilt the seat fully forward.

Setting the Right-hand Hydraulic Pump Neutral Position

1. Start the engine, open the throttle 1/2 way and release parking brake. Refer to Starting and Stopping the Engine in Operation , page 14.

   Note: The motion control lever must be in neutral while making any adjustments.
2. Adjust the pump rod length by rotating the knob, in the appropriate direction, until the wheel is still or slightly creeping in reverse (Figure 71).
3. Move the motion control lever forward and reverse, then back to neutral. The wheel must stop turning or slightly creep in reverse.
4. Open the throttle to fast. Make sure wheel remains stopped or slightly creeps in reverse, adjust if necessary.

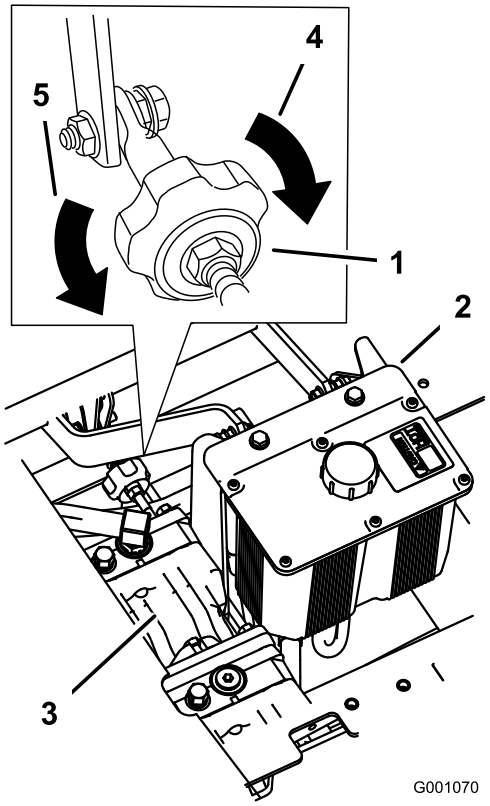

Figure 71

1. Tracking knob
2. Hydraulic tank
3. Hydraulic pumps
4. Turn this way to track right
5. Turn this way to track left

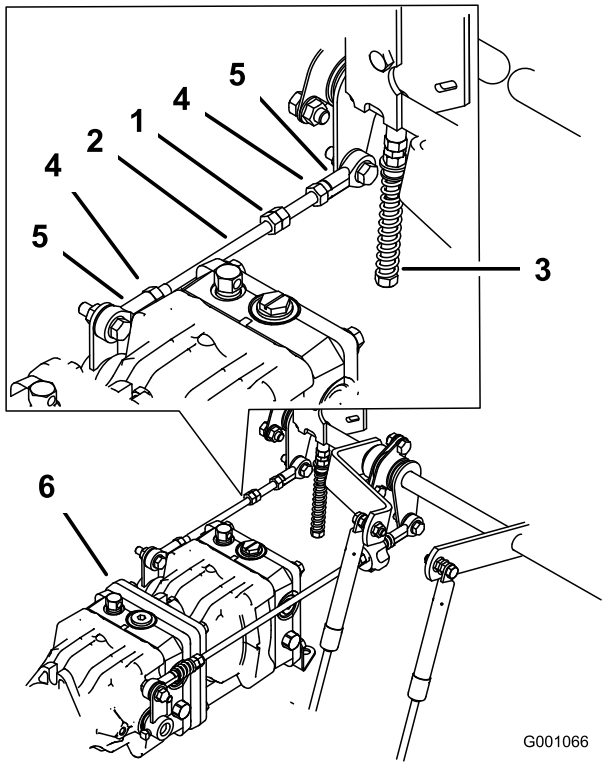

Figure 72

1. Double nuts
2. Pump rod
3. Adjustment bolt
4. Locknut
5. Ball joint
6. Pumps

Setting the Left-hand Hydraulic Pump Neutral Position

1. Loosen the locknuts at the ball joints on the pump control rod (Figure 72).
2. Start the engine, open throttle 1/2 way and release parking brake. Refer to Starting and Stopping the Engine in Operation , page 14.

   Note: The motion control lever must be in neutral while making any adjustments.

   Note: The front nut on the pump rod has left-hand threads.
3. Adjust the pump rod length by rotating double nuts on rod, in the appropriate direction, until wheel is still or slightly creeps in reverse (Figure 72).
4. Move the motion control lever forward and reverse, then back to neutral. The wheel must stop turning or slightly creep in reverse.
5. Open the throttle to fast. Make sure the wheel remains stopped or slightly creeps in reverse, adjust if necessary.
6. Tighten the locknuts at the ball joints (Figure 72).

Electrical system will not perform proper safety shut off with jumper wire installed.

- **Remove jumper wire from wire harness connector and plug connector into seat switch when adjustment is completed.**
- **Never operate this unit with jumper installed and seat switch bypassed.**

7. After both pump neutrals are set, shut off the machine.
8. Remove the jumper wire from the wire harness connector and plug the connector into the seat switch.
9. Install the seat rod and lower the seat into position.
10. Remove the jack stands.

Mower Deck Maintenance

Leveling the Mower at Three Positions

Setting Up the Machine

1. Position mower on a flat surface.
2. Disengage the PTO, move the motion control levers to the neutral locked position and set the parking brake.
3. Stop the engine, remove the key, and wait for all moving parts to stop before leaving the operating position.
4. Check tire pressure of all four tires. If needed, adjust to 13 psi (90 kPa)
5. Lower the mower to the 3 inch (76 mm) height-of-cut position.
6. Inspect the four chains. The chains need to have tension.

- If one rear chain is loose, lower (loosen) the front support arm on the same side. Refer to Adjusting the Front-to-Rear Mower Pitch.
- If one front chain is loose, raise (tighten) the front support arm for that chain. Refer to Adjusting the Front-to-Rear Mower Pitch.

Leveling the Mower Side-to-Side

1. Position the **right** blade side-to-side (Figure 73).

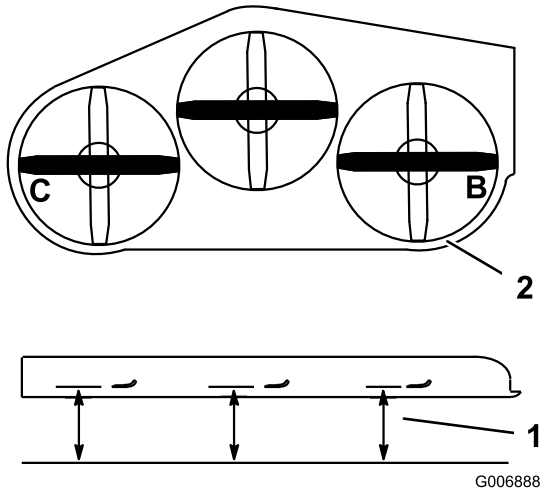

Figure 73

1. Measure here from blade to hard surface
2. Measure at B and C

2. Measure the right blade at the **B** location, from a level surface to the cutting edge of the blade tip (Figure 73).
3. Record this measurement. This measurement needs to be 3-1/8 to 3-1/4 inches.
4. Position the left blade side-to-side (Figure 73).
5. Measure the left blade at the **C** location (Figure 73), from a level surface to the cutting edge of the blade tip.
6. Record this measurement. This measurement needs to be 3-1/8 to 3-1/4 inches (80 to 83 mm).
7. If the measurements at positions **B** or **C** are not correct, loosen the bolt attaching the rear chain to the rear support arm (Figure 74).

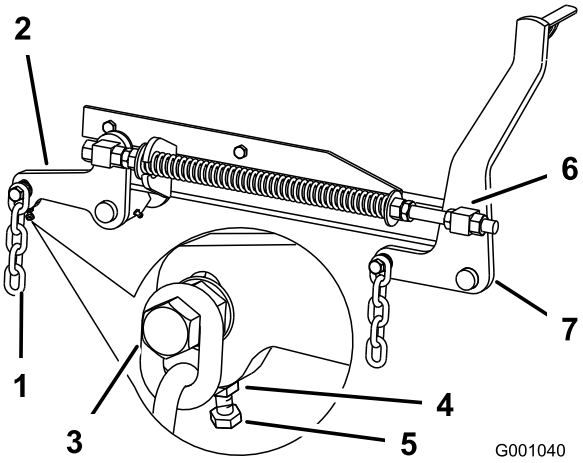

Figure 74

1. Rear chain
2. Rear support arm
3. Bolt
4. Jam Nut
5. Adjustment bolt
6. Front swivel
7. Front support arm

8. Loosen the jam nut under the rear support arm and adjust the adjustment bolt to get a measurement of 3-1/8 to 3-1/4 inches (80 to 83 mm)(Figure 74).

   Note: It is recommended that both sides of the mower are adjusted the same distance.
9. Tighten the jam nut under the rear support arm and tighten the bolt securing the chain to the rear support arm.
10. Adjust the opposite side if needed.

Adjusting the Front-to-Rear Mower Pitch

1. Position the right blade front-to-rear (Figure 75).
2. Measure the right blade at the **A** location, from a level surface to the cutting edge of the blade tip(Figure 75).

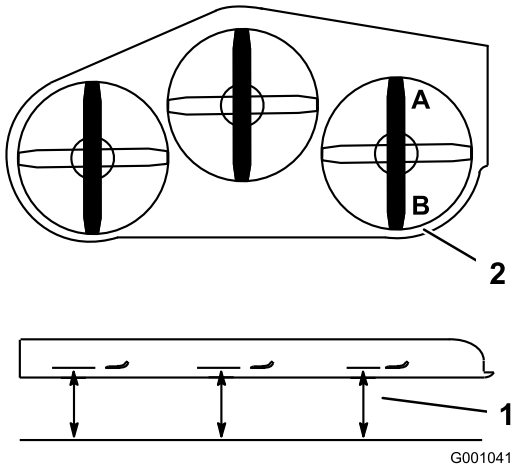

Figure 75

1. Measure here from blade to hard surface
2. Measure at A and B

3. Record this measurement.
4. Measure the right blade at the **B** location, from a level surface to the cutting edge of the blade tip (Figure 75).
5. Record this measurement.
6. The mower blade should be a 1/4 to 3/8 inch (6 to 10 mm) lower at position **A** than at position **B** (Figure 75). If it is not correct, proceed to the following steps.

   Note: Both of the front swivels need to be adjusted the same amount to maintain equal chain tension.
7. Loosen the front swivel jam nuts, at the front of the right and left swivels, approximately a 1/2 inch (13 mm) (Figure 74).
8. Adjust the lift nuts on both the left and the right side of the machine to achieve 1/4 to 3/8 inch (6 to 10 mm) lower in front at A than in the rear at **B** (Figure 74).
9. Tighten both swivel jam nuts against the front swivel to lock the height.
10. Check to make sure there is equal tension on the chains and adjust again if needed.

Adjusting the Compression Spring

1. Raise the mower lift lever to the transport position.
2. Check the distance between the two large washers, it needs to be 11-1/8 inches (28.2 cm) for 52 inch mower decks and 10-1/2 inches (26.7 cm) for 60 inch mower decks (Figure 76).
3. Adjust this distance, by loosening the spring jam nut and turning the nut in front of each spring (Figure 76). Turning the nut clockwise will shorten the spring; counter-clockwise will lengthen the spring.
4. Lock the nut into position by tightening the spring jam nut (Figure 76).

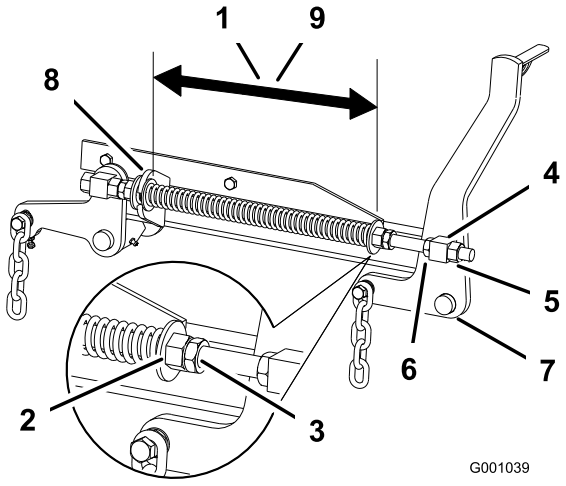

Figure 76

1. 11–1/8 inch (28.2 cm) between the large washers for 52 inch mower decks
2. Front nut
3. Spring jam nut
4. Front swivel
5. Swivel jam nut
6. Lift nut
7. Front support arm
8. Large washer
9. 10-1/2 inch (26.7 cm) between the large washers for 60 inch mower decks

Servicing the Cutting Blades

Maintain sharp blades throughout the cutting season because sharp blades cut cleanly without tearing or shredding the grass blades. Tearing and shredding turns grass brown at the edges, which slows growth and increases the chance of disease.

Check the cutter blades daily for sharpness, and for any wear or damage. File down any nicks and sharpen the blades as necessary. If a blade is damaged or worn, replace it immediately with a genuine Toro replacement blade. For convenient sharpening and replacement, you may want to keep extra blades on hand.

A worn or damaged blade can break, and a piece of the blade could be thrown into the operator's or bystander's area, resulting in serious personal injury or death.

- **Inspect the blade periodically for wear or damage.**
- **Replace a worn or damaged blade.**

Before Inspecting or Servicing the Blades

Park the machine on a level surface, disengage the blade control (PTO), and set the parking brake. Turn the ignition key to Off. Remove the key.

Inspecting the Blades

Service Interval: Before each use or daily

1. Inspect the cutting edges (Figure 77). If the edges are not sharp or have nicks, remove and sharpen the blades. Refer to Sharpening the Blades.
2. Inspect the blades, especially the curved area (Figure 77). If you notice any damage, wear, or a slot forming in this area (Figure 77), immediately install a new blade.

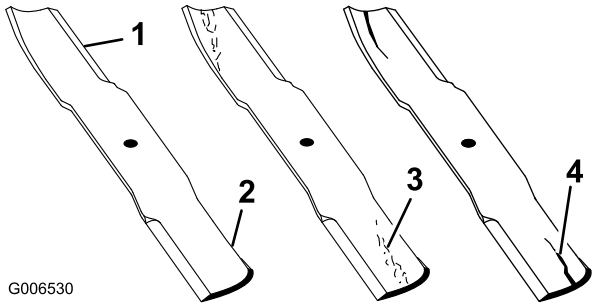

Figure 77

1. Cutting Edge
2. Curved Area
3. Wear/slot Forming
4. Crack

Checking for Bent Blades

1. Disengage the PTO, move the motion control levers to the neutral locked position and set the parking brake.
2. Stop the engine, remove the key, and wait for all moving parts to stop before leaving the operating position.
3. Rotate the blades until the ends face forward and backward (Figure 78). Measure from a level surface to the cutting edge, position **A**, of the blades (Figure 78). Note this dimension.

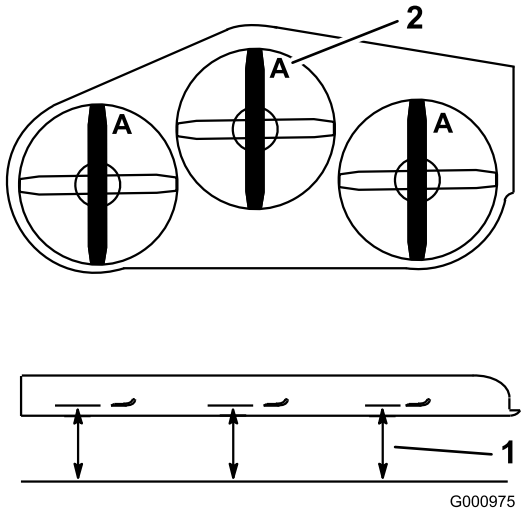

Figure 78

1. Measure here from blade to hard surface
2. Position A

4. Rotate the opposite ends of the blades forward.
5. Measure from a level surface to the cutting edge of the blades at the same position as in step 3 above. The difference between the dimensions obtained in steps 3 and 4 must not exceed 1/8 inch (3 mm). If this dimension exceeds 1/8 inch (3 mm), the blade is bent and must be replaced; refer to Removing the Blades and Installing the Blades.

A blade that is bent or damaged could break apart and could seriously injure or kill you or bystanders.

- **Always replace bent or damaged blade with a new blade.**
- **Never file or create sharp notches in the edges or surfaces of blade.**

Removing the Blades

Blades must be replaced if a solid object is hit, if the blade is out of balance or is bent. To ensure optimum performance and continued safety conformance of the machine, use genuine Toro replacement blades. Replacement blades made by other manufacturers may result in non-conformance with safety standards.

Contact with a sharp blade can cause serious injury.

Wear gloves or wrap sharp edges of the blade with a rag.

1. Hold the blade end using a rag or thickly-padded glove.
2. Remove the blade bolt, spring disk and blade from the spindle shaft (Figure 81).

Sharpening the Blades

When sharpening blade, pieces of blade could be thrown and cause serious injury.

Wear proper eye protection when sharpening blade.

1. Use a file to sharpen the cutting edge at both ends of the blade (Figure 79). Maintain the original angle. The blade retains its balance if the same amount of material is removed from both cutting edges.

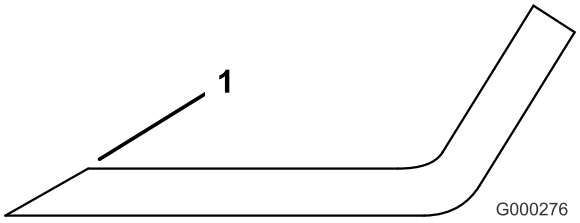

Figure 79

1. Sharpen at original angle

2. Check the balance of the blade by putting it on a blade balancer (Figure 80). If the blade stays in a horizontal position, the blade is balanced and can be used. If the blade is not balanced, file some metal off the end of the sail area only (Figure 81). Repeat this procedure until the blade is balanced.

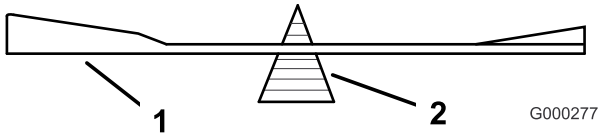

Figure 80

1. Blade
2. Balancer

Installing the Blades

1. Install the blade onto the spindle shaft (Figure 81).

   Important: The curved part of the blade must be pointing upward toward the inside of the mower to ensure proper cutting.

2. Install the spring disk and blade bolt. The spring disk cone must be installed toward the bolt head (Figure 81). Torque the blade bolt to 85-110 ft-lb (115-150 N•m).

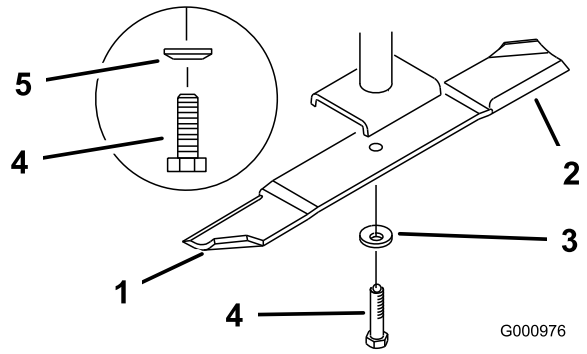

Figure 81

1. Sail Area of Blade
2. Blade
3. Spring Disk
4. Blade Bolt
5. Cone Towards Bolt Head

Replacing the Grass Deflector

An uncovered discharge opening could allow the lawn mower to throw objects in the operator's or bystander's direction and result in serious injury. Also, contact with the blade could occur.

- **Never operate the lawn mower unless you install a cover plate, a mulch plate, or a grass chute and catcher.**
- **Make sure the grass deflector is in the down position.**

1. Remove the locknut, bolt, spring and spacer holding the deflector to the pivot brackets (Figure 82). Remove the damaged or worn grass deflector.
2. Place the spacer and spring onto grass deflector. Place the **L** end of spring behind deck edge.

   Note: Make sure the L end of the spring is installed behind the deck edge before installing the bolt as shown in Figure 82.

3. Install the bolt and nut. Place the **J** hook end of the spring around the grass deflector (Figure 82).

Important: **The grass deflector must be able to lower down into position. Lift the deflector up to test that it lowers into the full down position.**

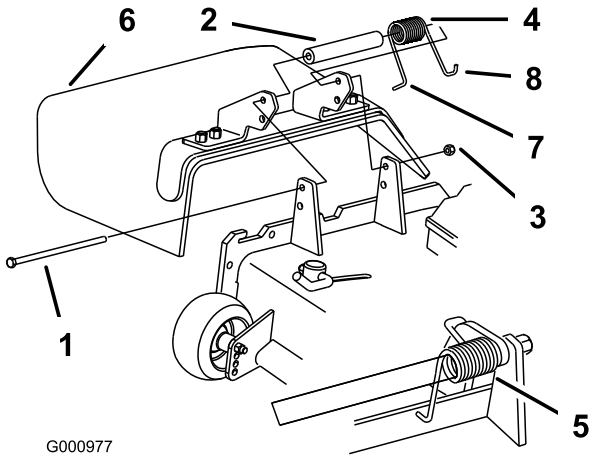

Figure 82

1. Bolt
2. Spacer
3. Locknut
4. Spring
5. Spring installed
6. Grass Deflector
7. L end of spring, place behind deck edge before installing bolt
8. J hook end of spring

Cleaning

Cleaning Under the Mower

Service Interval: Before each use or daily

Remove the grass buildup under the mower daily.

1. Disengage the PTO, move the motion control levers to the neutral locked position and set the parking brake.
2. Stop the engine, remove the key, and wait for all moving parts to stop before leaving the operating position.
3. Raise the mower to the transport position.

Waste Disposal

Engine oil, batteries, hydraulic oil, and engine coolant are pollutants to the environment. Dispose of these according to your state and local regulations.

Storage

Cleaning and Storage

1. Disengage the power take off (PTO), set the parking brake, and turn the ignition key to Off. Remove the key.
2. Remove grass clippings, dirt, and grime from the external parts of the entire machine, especially the engine and hydraulic system. Clean dirt and chaff from the outside of the engine cylinder head fins and blower housing.

   Important: You can wash the machine with mild detergent and water. Do not pressure wash the machine. Avoid excessive use of water, especially near the control panel, engine, hydraulic pumps, and motors.
3. Check the brake; refer to Servicing the Brake in Brake Maintenance , page 44.
4. Service the air cleaner; refer to Servicing the Air Cleaner in Engine Maintenance , page 32.
5. Grease the machine; refer to Greasing and Lubrication in Lubrication , page 30.
6. Change the crankcase oil; refer to Servicing the Engine Oil in Engine Maintenance , page 32.
7. Check the tire pressure; refer to Checking the Tire Pressure in Drive System Maintenance , page 39.
8. Change the hydraulic filter; refer to Servicing the Hydraulic System in Hydraulic System Maintenance , page 49.
9. Charge the battery; refer to Servicing the Battery in Electrical System Maintenance , page 37.
10. Scrape any heavy buildup of grass and dirt from the underside of the mower, then wash the mower with a garden hose.

    Note: Run the machine with the PTO engaged and the engine at high idle for 2 to 5 minutes after washing.
11. Check the condition of the blades; refer to Servicing the Cutting Blades in *Mower Deck Maintenance*, page 53.
12. Prepare the machine for storage when non-use occurs over 30 days. Prepare the machine for storage as follows:

    A. Add a petroleum based stabilizer/conditioner to fuel in the tank. Follow mixing instructions from the stabilizer manufacturer. Do not use an alcohol based stabilizer (ethanol or methanol).

    Note: A fuel stabilizer/conditioner is most effective when mixed with fresh fuel and used at all times.

    B. Run the engine to distribute conditioned fuel through the fuel system (5 minutes).

    C. Stop the engine, allow it to cool, and drain the fuel tank; refer to Servicing the Fuel Tank in Fuel System Maintenance , page 36.

    D. Restart the engine and run it until it stops.

    E. Dispose of fuel properly. Recycle as per local codes.

    Important: Do not store stabilizer/conditioned fuel over 90 days.
13. Check and tighten all bolts, nuts, and screws. Repair or replace any part that is damaged.
14. Paint all scratched or bare metal surfaces. Paint is available from your Authorized Service Dealer.
15. Store the machine in a clean, dry garage or storage area. Remove the key from the ignition switch and keep it out of reach of children or other unauthorized users. Cover the machine to protect it and keep it clean.

Troubleshooting

Problem	Possible Cause	Corrective Action
The starter does not crank.	1. The blade control (PTO) is engaged. 2. The parking brake is not on. 3. The operator is not seated. 4. The battery is dead. 5. The electrical connections are corroded or loose. 6. The fuse is blown. 7. The relay or switch is defective.	1. Move the blade control (PTO) to the disengaged position. 2. Set the parking brake. 3. Sit on the seat. 4. Charge the battery. 5. Check the electrical connections for good contact. 6. Replace the fuse. 7. Contact an Authorized Service Dealer.
The engine will not start, starts hard, or fails to keep running.	1. The fuel tank is empty. 2. The air cleaner is dirty. 3. Dirt is in the fuel filter. 4. Dirt, water, or stale fuel is in the fuel system.	1. Fill the fuel tank with fuel. 2. Clean or replace the air cleaner element. 3. Replace the fuel filter. 4. Contact an Authorized Service Dealer.
The engine loses power.	1. The engine load is excessive. 2. The air cleaner is dirty. 3. The oil level in the crankcase is low. 4. The cooling fins and air passages above the engine are plugged. 5. The vent hole in the fuel cap is plugged. 6. Dirt is in the fuel filter. 7. Dirt, water, or stale fuel is in the fuel system.	1. Reduce the ground speed. 2. Clean the air cleaner element. 3. Add oil to the crankcase. 4. Remove the obstruction from the cooling fins and air passages. 5. Clean or replace the fuel cap. 6. Replace the fuel filter. 7. Contact an Authorized Service Dealer.
The engine overheats.	1. The engine load is excessive. 2. The oil level in the crankcase is low. 3. The cooling fins and air passages above the engine are plugged.	1. Reduce the ground speed. 2. Add oil to the crankcase. 3. Remove the obstruction from the cooling fins and air passages.
The machine does not drive.	1. The by pass valve is not closed tight. 2. The drive or pump belt is worn, loose or broken. 3. The drive or pump belt is off a pulley. 4. The idler spring is broken or missing. 5. The hydraulic fluid level is low or too hot.	1. Tighten the by pass valve. 2. Change the belt. 3. Change the belt. 4. Replace the spring. 5. Add hydraulic fluid to the reservoir or let it cool down.
Abnormal vibration.	1. The cutting blade(s) is/are bent or unbalanced. 2. The blade mounting bolt is loose. 3. The engine mounting bolts are loose. 4. The engine pulley, idler pulley, or blade pulley is loose. 5. The engine pulley is damaged. 6. The blade spindle is bent. 7. The motor mount is loose or worn.	1. Install new cutting blade(s). 2. Tighten the blade mounting bolt. 3. Tighten the engine mounting bolts. 4. Tighten the appropriate pulley. 5. Contact an Authorized Service Dealer. 6. Contact an Authorized Service Dealer. 7. Contact an Authorized Service Dealer.

Problem	Possible Cause	Corrective Action
Uneven cutting height.	1. The cutting blade(s) is/are not sharp. 2. The cutting blade(s) is/are bent. 3. The mower deck is not level. 4. The underside of mower is dirty. 5. The tire pressure is not correct. 6. The blade spindle is bent.	1. Sharpen the blade(s). 2. Install new cutting blade(s). 3. Level the mower deck from side-to-side and front-to-rear. 4. Clean the underside of the mower. 5. Adjust the tire pressure. 6. Contact an Authorized Service Dealer.
The cutting blades do not rotate.	1. The drive belt is worn, loose or broken. 2. The drive belt is off pulley. 3. The mower deck belt is worn, loose or broken. 4. The mower deck belt came off a pulley. 5. The idler spring is broken or missing.	1. Check the belt tension. 2. Install the drive belt and check adjusting shafts and belt guides for correct position. 3. Install a new mower deck belt. 4. Install mower deck belt and check the idler pulley, idler arm and spring for the correct position and function. 5. Replace the spring.

Schematics

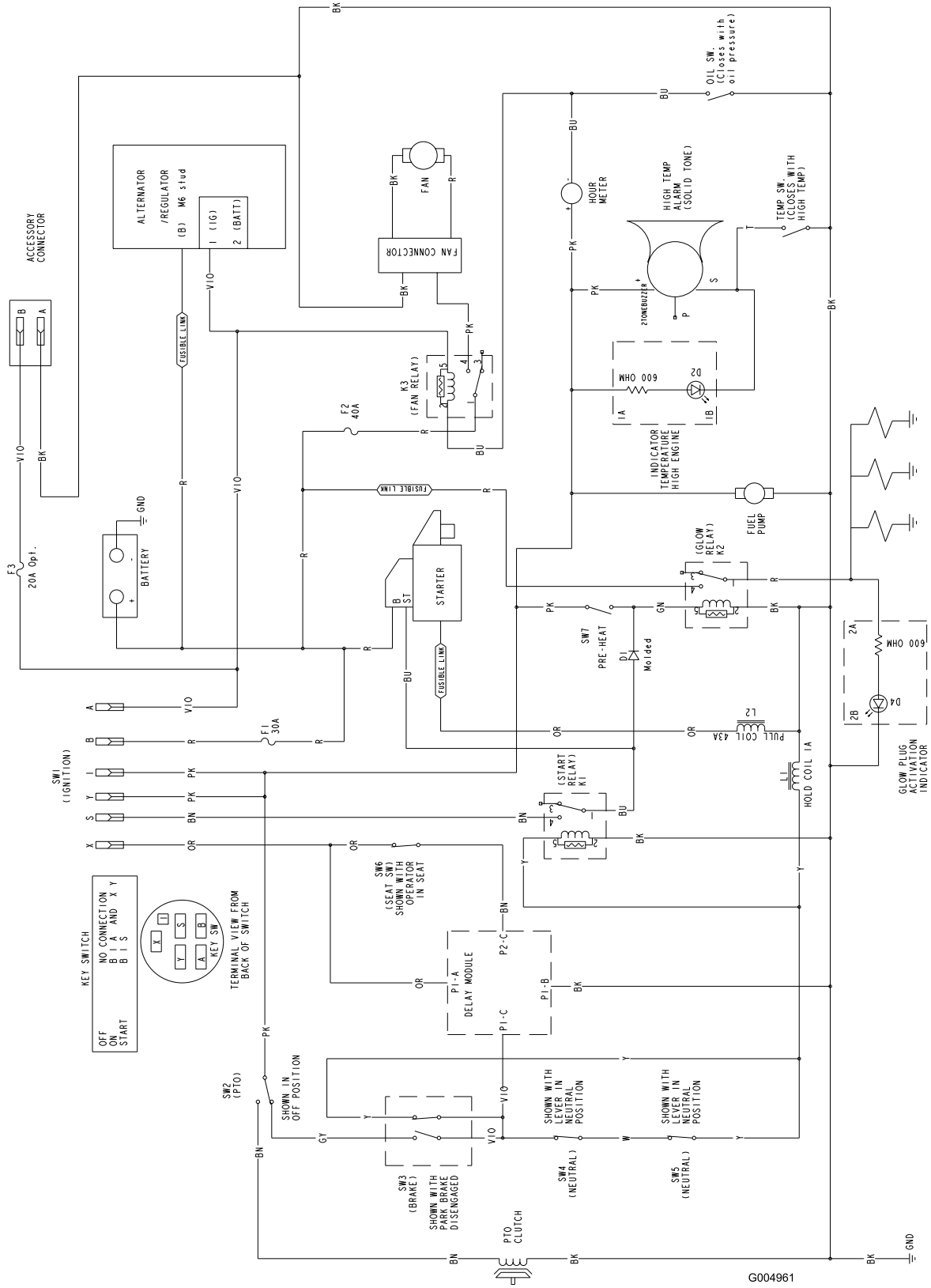

Wire Diagram (Rev. A)

Notes:

International Distributor List—Consumer Products

Distributor:	Country:	Phone Number:
Atlantis Su ve Sulama Sisstemleri Lt	Turkey	90 216 344 86 74
Balama Prima Engineering Equip	Hong Kong	852 2155 2163
B-Ray Corporation	Korea	82 32 551 2076
Casco Sales Company	Puerto Rico	787 788 8383
Ceres S.A	Costa Rica	506 239 1138
CSSC Turf Equipment (pvt) Ltd	Sri Lanka	94 11 2746100
Cyril Johnston & Co	Nothern Ireland	44 2890 813 121
Equiver	Mexico	52 55 539 95444
Femco S.A.	Guatemala	502 442 3277
G.Y.K. Company ltd.	Japan	81 726 325 861
Geomechaniki of Athens	Greece	30 10 935 0054
Guandong Golden Star	China	86 20 876 51338
Hako Gorund and Garden	Sweden	46 35 10 0000
Hydroturf Int. Co	Dubai United Arab Emirates	97 14 347 9479
Hydroturf Egypt LLC	Egypt	202 519 4308
Ibea S.p.A.	Italy	39 0331 853611
Irriamc	Portugal	351 21 238 8260
Jean Heybroek b.v.	Netherlands	31 30 639 4611
Lely (U.K.) Limited	United Kingdom	44 1480 226 800
Maquiver S.A.	Columbia	57 1 236 4079
Maruyama Mfg. Co. Inc.	Japan	81 3 3252 2285
Metra Kft	Hungary	36 1 326 3880
Mountfield a.s.	Czech Republic	420 255 704 220
Munditol S.A.	Argentina	54 11 4 821 9999
Oslinger Turf Equipment SA	Ecuador	593 4 239 6970
Oy Hako Ground and Garden Ab	Finland	358 987 00733
Parkland Products Ltd	New Zealand	64 3 34 93760
Prochaska & Cie	Austria	43 1 278 5100
RT Cohen 2004 Ltd	Israel	972 986 17979
Riversa	Spain	34 9 52 83 7500
Roth Motorgerate GmBh & Co	Germany	49 7144 2050
Sc Svend Carlsen A/S	Denmark	45 66 109 200
Solvert S.A.S	France	33 1 30 81 77 00
Spypros Stavrinides Limited	Cyprus	357 22 434131
Surge Systems India Limited	India	91 1 292299901
T-Markt Logistics Ltd	Hungary	36 26 525 500
Toro Australia	Australia	61 3 9580 7355
Toro Europe BVBA	Belgium	32 14 562 960

The Toro Warranty

Conditions and Products Covered

The Toro® Company and its affiliate, Toro Warranty Company, pursuant to an agreement between them, jointly promises to the original purchaser* to repair any Toro Product used for normal residential purposes* if defective in materials or workmanship. The following time periods apply from the date of original purchase:

Products	Warranty Period
Walk Power Mowers	2-year limited warranty
Rear Engine Riders	2-year limited warranty
Lawn & Garden Tractors	2-year limited warranty
Electric Hand Held Products	2-year limited warranty
Snowthrowers	2-year limited warranty
Consumer Zero Turn	2-year limited warranty

* "Original purchaser" means use the person who originally purchased Toro products.

* "Normal residential purposes"means use of the product on the same lot as your home. Use at more than one location is considered commercial use, and the commercial use warranty would apply.

Limited Warranty for Commercial Use

Toro Consumer Products and attachments used for commercial, institutional, or rental use are warranted against defects in materials or workmanship for the following time periods from the date of original purchase:

Products	Warranty Period
Walk Power Mowers	90 day warranty
Rear Engine Riders	90 day warranty
Lawn & Garden Tractors	90 day warranty
Electric Hand Held Products	90 day warranty
Snowthrowers	90 day warranty
Consumer Zero Turn	45 day warranty

Instructions for Obtaining Warranty Service

If you think that your Toro Product contains a defect in materials or workmanship, follow this procedure:

1. Contact your seller to arrange service of the product. If for any reason it is impossible for you to contact your seller, you may contact any Toro Authorized Distributor to arrange service.
2. Bring the product and your proof of purchase (sales receipt) to your seller or the Service Dealer.

If for any reason you are dissatisfied with the Service Dealer's analysis or with the assistance provided, contact the Toro importer or contact us at:

Customer Care Department, Consumer Division
Toro Warranty Company
8111 Lyndale Avenue South
Bloomington, MN 55420-1196
Manager: Technical Product Support: 001-952-887-8248

See attached Distributor List

Owner Responsibilities

You must maintain your Toro Product by following the maintenance procedures described in the operator's manual. Such routine maintenance, whether performed by a dealer or by you, is at your expense.

Items and Conditions Not Covered

This express warranty does not cover:

- Cost of regular maintenance service or parts, such as filters, fuel, lubricants, tune-up parts, blade sharpening, brake and clutch adjustments.
- Any product or part which has been altered or misused or required replacement or repair due to normal wear, accidents, or lack of proper maintenance.
- Repairs necessary due to improper fuel, contaminants in the fuel system, or failure to properly prepare the fuel system prior to any period of non-use over three months.
- Engine and transmission. These are covered by the appropriate manufacturer's guarantees with separate terms and conditions.

All repairs covered by this warranty must be performed by an Authorized Toro Service Dealer using Toro approved replacement parts.

General Conditions

The purchaser is covered by the national laws of each country. The rights to which the purchaser is entitled with the support of these laws are not restricted by this warranty.