Form Number 3359-639 Rev A

21in Heavy-Duty
Recycler®/Rear Bagger Lawn Mower

Model No. 22187 - 280000001 and up.

Parts Catalog

Ordering Replacement Parts
To order replacement parts, please supply the part number, the quantity, and the description of each part desired.

Understanding Reference Numbers
Each Identified part in an illustration has a reference number. The reference number for a part also appears in the parts list, along with other information about the part.

This catalog uses two special reference number formats, one to indicate parts in a service assembly and another to indicate the quantity of a given part in an illustration.

Service Assembly Reference Numbers
Parts in service assemblies have reference numbers in the form a:b. The a represents the reference number of the entire service assembly and the b represents a sequential number unique to each part within the service assembly.

For example, a wheel assembly might be identified by reference number 6, the tire by 6:1, the valve by 6:2, and the wheel by 6:3. When you order the assembly identified by reference number 6, you receive all parts identified by reference numbers 6:1, 6:2, and 6:3. However, you may also order any part individually. Reference numbers of this type appear in illustrations and in part lists.

Reference Numbers Indicating Quantity
In an illustration, if a reference number indicates more than one part, the reference number has the form nX y. The n represents the quantity of the part, the X is the multiplication symbol, and the y represents the reference number.

For example, in an illustration, the reference number 2X 37 means that two of the parts identified by reference number 37 are indicated.

Register your product at www.Toro.com

© The Toro Company - 2008
All Rights Reserved

Contents

Description	Page
Housing Assembly	3
Housing Assembly No. 98-7139	4
Front Wheel and Tire Assembly No. 100-2870	5
Gear Case Assembly No. 74-1860	6
Engine and Fuel Tank Assembly	7
Handle Assembly	8
Rear Drive and Wheel Assembly	9
Rear Wheel Assembly No. 100-2860	10
Grass Bag Assembly No. 106-0975	11
Cylinder and Crankcase Assembly Kawasaki FJ180V-AS31	12
Piston and Crankshaft Assembly Kawasaki FJ180V-AS31	13
Valve and Camshaft Assembly Kawasaki FJ180V-AS31	14
Lubrication Equipment Assembly Kawasaki FJ180V-AS31	15
Cooling Equipment Assembly Kawasaki FJ180V-AS31	16
Electric Equipment Assembly Kawasaki FJ180V-AS31	17
Control Equipment Assembly Kawasaki FJ180V-AS31	18
Carburetor Assembly Kawasaki FJ180V-AS31	19
Air Filter and Muffler Assembly Kawasaki FJ180V-AS31	20
Starter Assembly Kawasaki FJ180V-AS31	21
Brake and Cover Assembly Kawasaki FJ180V-AS31	22
Label Assembly Kawasaki FJ180V-AS31	23

Part Description Abbreviations

Part descriptions in this catalog may include the following abbreviations.

AR. . . . . as required
ASM. . . . . assembly
BBC. . . . . blade brake clutch
CARR. . . . . carriage
DEG. . . . . degrees
EXT. . . . . external
FH. . . . . flat head
GA. . . . . gauge
HD. . . . . heavy-duty
HF. . . . . hex flange
HH. . . . . hex head
HHF. . . . . hex head flange
HHFTF. . . . . hex head flange thread forming
HJ. . . . . hex jam
HLH. . . . . hex lag head
HOC. . . . . height-of-cut
HSBH. . . . . hex socket button head
HSFH. . . . . hex socket flat head
HSH. . . . . hex socket head
HWH. . . . . hex washer head
HWHTF. . . . . hex washer head thread forming
HYD. . . . . hydraulic
LH. . . . . left hand
NI. . . . . nylon insert
NPTF. . . . . national pipe thread fine
PFH. . . . . phillips flat head
PPH. . . . . phillips pan head
PPHTF. . . . . phillips pan head thread forming
PRH. . . . . phillips round head
PTH. . . . . phillips truss head
PTO. . . . . power-take-off
RH. . . . . right hand
ROPS. . . . . roll-over protection system
SFH. . . . . slotted fillister head
SHH. . . . . slotted hex head
SHWH. . . . . slotted hex washer head
SPH. . . . . slotted pan head
SQH. . . . . square head
SRH. . . . . slotted round head
STD. . . . . standard
TAP. . . . . self tapping
TTH. . . . . torx truss head

Footnotes

❶ Not illustrated
❷ Not serviced separately
❸ Obtain from your local Kawasaki dealer

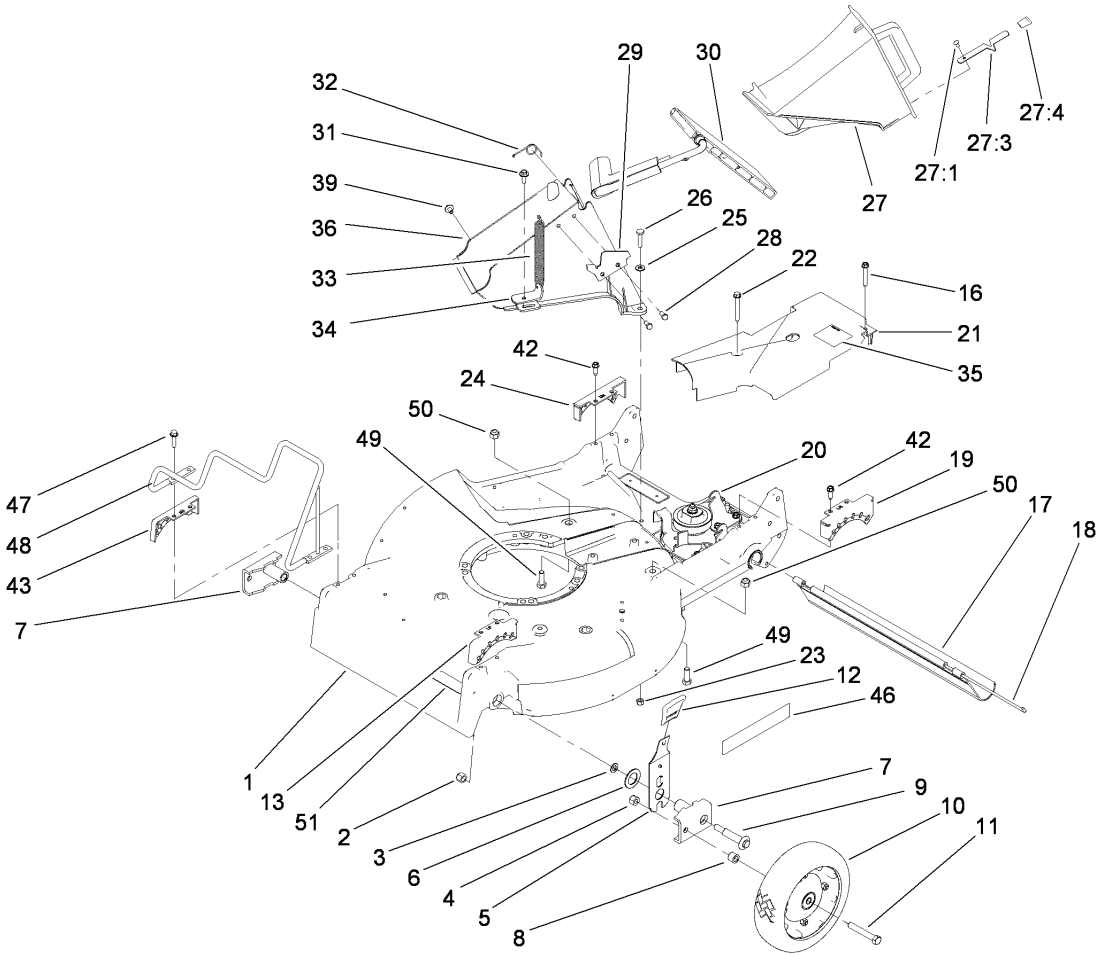

Housing Assembly

Ref	Part No.	Qty.	Description
1	98-7139	1	Housing
2	3296-6	2	Nut-Lock
3	40-1940	2	Washer
4	32152-2	2	Nut-Lock, Cone
5	110-0537	2	Spring Arm ASM
6	257-3	2	Washer-Thrust
7	61-8300	2	Arm-Pivot, Front
8	52-2480	2	Spacer-Wheel
9	114-3468	2	Screw-Shoulder
10	100-2870	2	Wheel And Tire ASM
11	323-12	2	Screw-HH
12	110-0549	2	Knob-HOC
13	49-8760	1	Quadrant-Front, LH
16	92-1616	1	Screw-HWHTF
17	112-9989	1	Shield-Trailing
18	33-3208	1	Rod-Shield
19	49-8740	1	Quadrant-Rear, LH
20	74-1860	1	Gear Case ASM
21	74-1770	1	Cover-Belt
22	37-7260	1	Screw-HHFTF
23	3296-42	2	Nut-Lock, NI
24	49-8750	1	Quadrant-Rear, RH
25	3256-22	2	Washer-Flat
26	321-8	2	Screw-HH

Ref	Part No.	Qty.	Description
27	77-0500	1	Discharge Plug ASM
27:1	3295-35	1	Rivet-Head, Flat
27:3	76-4640	1	Latch-Plug, Discharge
27:4	76-4650	1	Grip-Latch
28	46-8090	2	Screw-Plastite
29	93-3154	1	Latch-Plate
30	93-7351	1	Discharge Door ASM
31	46-6811	1	Screw-HWH
32	80-3770	1	Retainer-Door
33	76-4660	1	Spring-Door
34	71-9350	1	Bracket-Spring
35	52-2620	1	Label-Grease
36	82-9152	1	Tunnel-Discharge
39	46-6810	1	Screw And Washer ASM
42	49-2040	4	Screw-HWHTF
43	49-8770	1	Quadrant-Front, RH
46	106-0689	1	Decal
47	32144-86	4	Screw-HWHTF
48	109-7638	1	Wld, Engine Guard
49	323-6	2	Screw-HH
50	3296-39	2	Nut-Lock, NI
51	68-7410	1	Decal-Blade

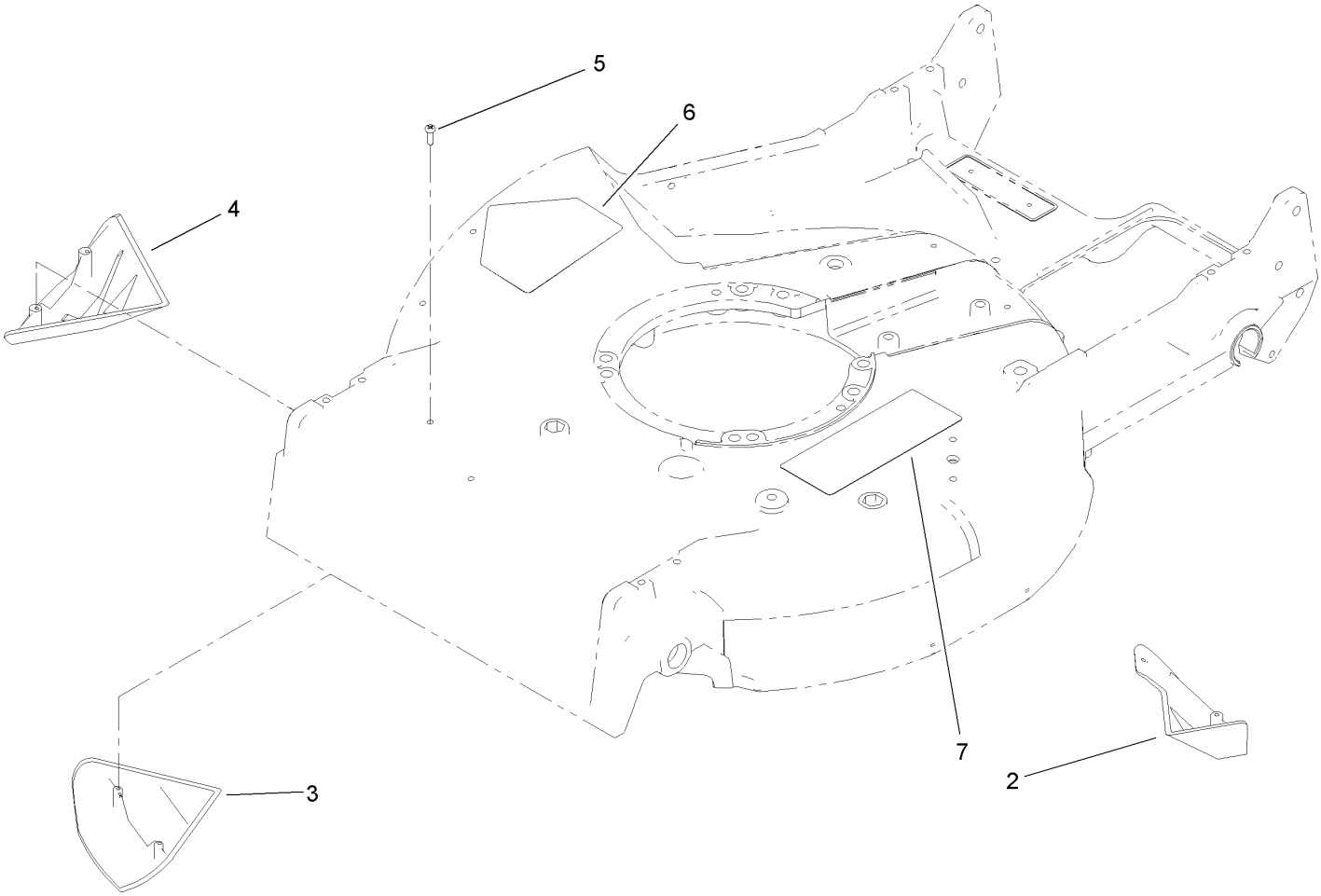

Housing Assembly No. 98-7139

Ref	Part No.	Qty.	Description
2	92-1750	1	Kicker-Rear, Sp
3	92-1720	1	Kicker-Front
4	92-1730	1	Kicker-RH
5	32144-111	6	Screw-PPH
6	39-5770	1	Decal-Danger
7	110-4989	1	Decal-Warning

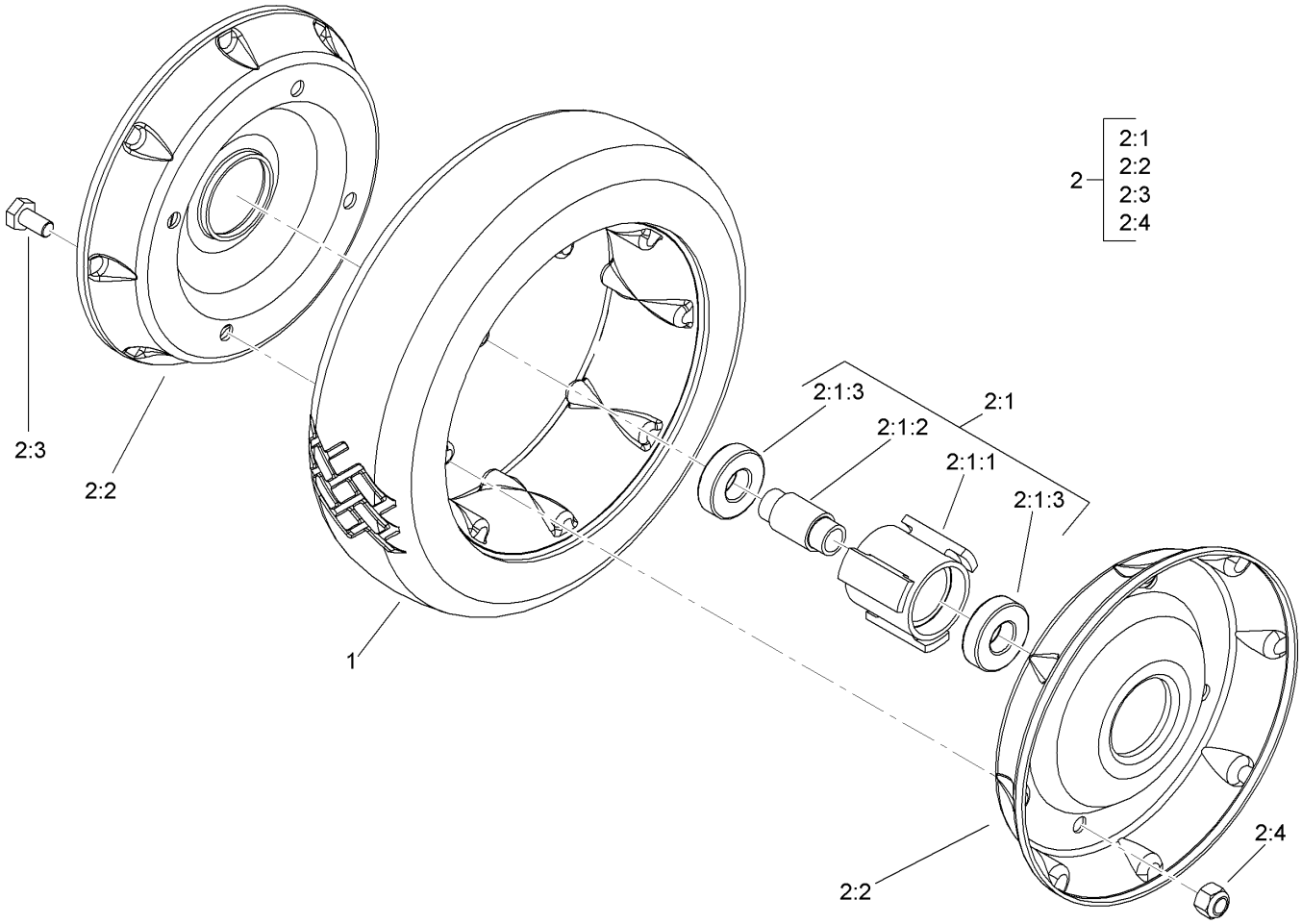

Front Wheel and Tire Assembly No. 100-2870

Ref	Part No.	Qty.	Description
1	53-7740	1	Tire
❷2		1	Wheel ASM
❷2:1		1	Hub And Bearing ASM
2:1:1	52-2410	1	Hub-Bearing
2:1:2	52-2440	1	Spacer-Bearing
2:1:3	52-2450	2	Bearing-Wheel
2:2	53-7780-06	2	Plate-Wheel, Half
2:3	321-2	4	Screw-HH
2:4	3296-42	4	Nut-Lock, NI

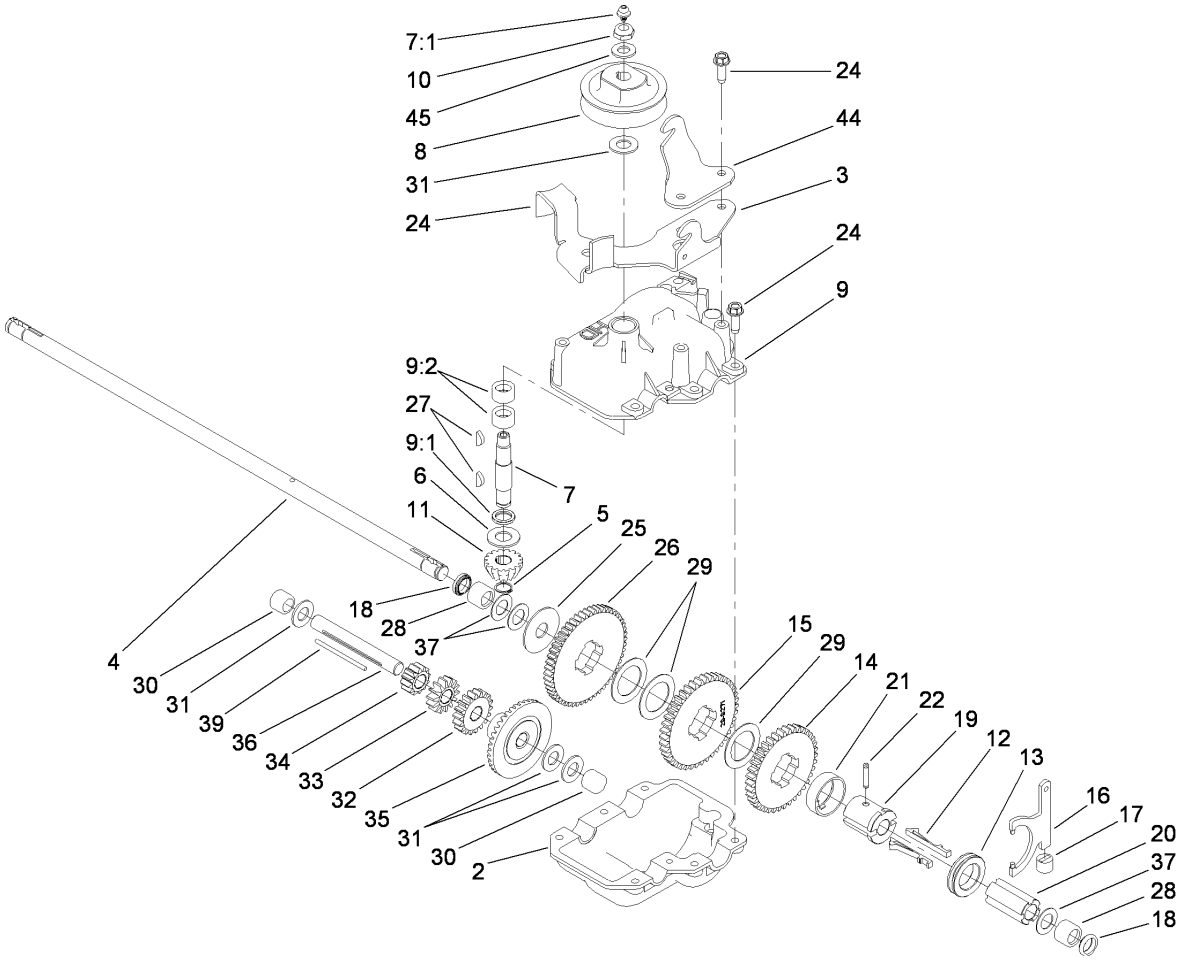

Gear Case Assembly No. 74-1860

Ref	Part No.	Qty.	Description
2	74-1920	1	Case-Gear, Lower
3	49-8461-03	1	Bracket-Guide, Belt
4	74-1890	1	Shaft-Output
5	32151-57	1	Ring-Retaining
6	47-2910	1	Washer-Thrust
7	13-5149	1	Input Shaft ASM
7:1	302-63	1	Zerk
8	39-6740	1	Pulley
9	13-9739	1	Upper Gearcase ASM
9:1	47-7260	1	Seal
9:2	47-7270	2	Bearing
10	3296-5	1	Nut-Lock
11	39-6660	1	Pinion-Bevel
12	29-9330	2	Key-Shift
13	29-9340	1	Collar-Shift
14	42-4740	1	Gear-38T
15	29-9271	1	Gear-42T
16	60-8870	1	Yoke-Shift
17	29-9570	1	Bushing-Yoke
18	47-6730	2	Seal-Oil
19	55-8010	1	Sleeve-Gear
20	39-6720	1	Sleeve
21	55-8020	1	Retainer-Key
22	3285-19	1	Pin-Groove

Ref	Part No.	Qty.	Description
24	49-2040	8	Screw-HWHTF
25	29-9690	1	Washer
26	46-3560	1	Gear
27	3257-1	2	Key-Woodruff
28	48-2060	2	Bearing-Roller
29	36-4770	3	Washer
30	252-103	2	Bearing-Closed
31	36-4792	4	Washer-Thrust
32	39-6650	1	Gear-18T
33	46-3550	1	Gear-14T
34	46-3540	1	Gear-12T
35	74-1760	1	Gear-Bevel
36	53-7950	1	Shaft-Intermediate
37	36-4780	3	Washer-Plain
39	39-7842	1	Key
44	74-1750-03	1	Bracket-Engage, Traction
45	3256-45	1	Washer-Flat

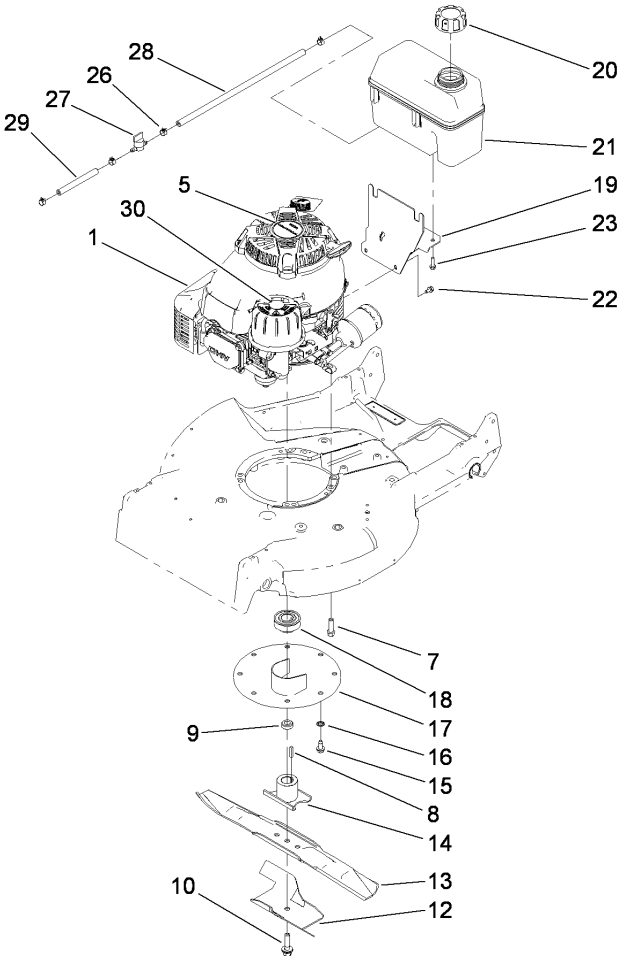

Engine and Fuel Tank Assembly

Ref	Part No.	Qty.	Description
1	110-5047	1	Engine-Kawasaki, Fj180V-As31
5	112-9967	1	Decal
7	95-1727	4	Screw-Taptite
8	5-1077	1	Key-Square
9	103-3795	1	Spacer-Retainer, Blade
10	105-8579	1	Bolt-Blade
12	92-1599-03	1	Stiffener-Blade
13	91-2256-03	1	Blade-21 Inch
14	52-2170-03	1	Retainer-Blade ASM
15	32144-70	3	Screw-HWHTF
16	3254-6	3	Washer-Lock, Internal
17	65-5860	1	Protector-Crankshaft
18	46-7910	1	Pulley-Driver
19	115-0954-03	1	Tank Mount ASM
20	93-7198	1	Gas Cap ASM
21	106-0625	1	Tank-Fuel
22	104-2628	3	Screw-HWH
23	46-8091	2	Screw-HWH
26	109-0296	1	Hose-Fuel
27	1-603770	1	Valve-Fuel
28	2412-98	4	Clamp
29	109-0650	1	Hose-Fuel
30	114-3415	1	Decal-Air Cleaner

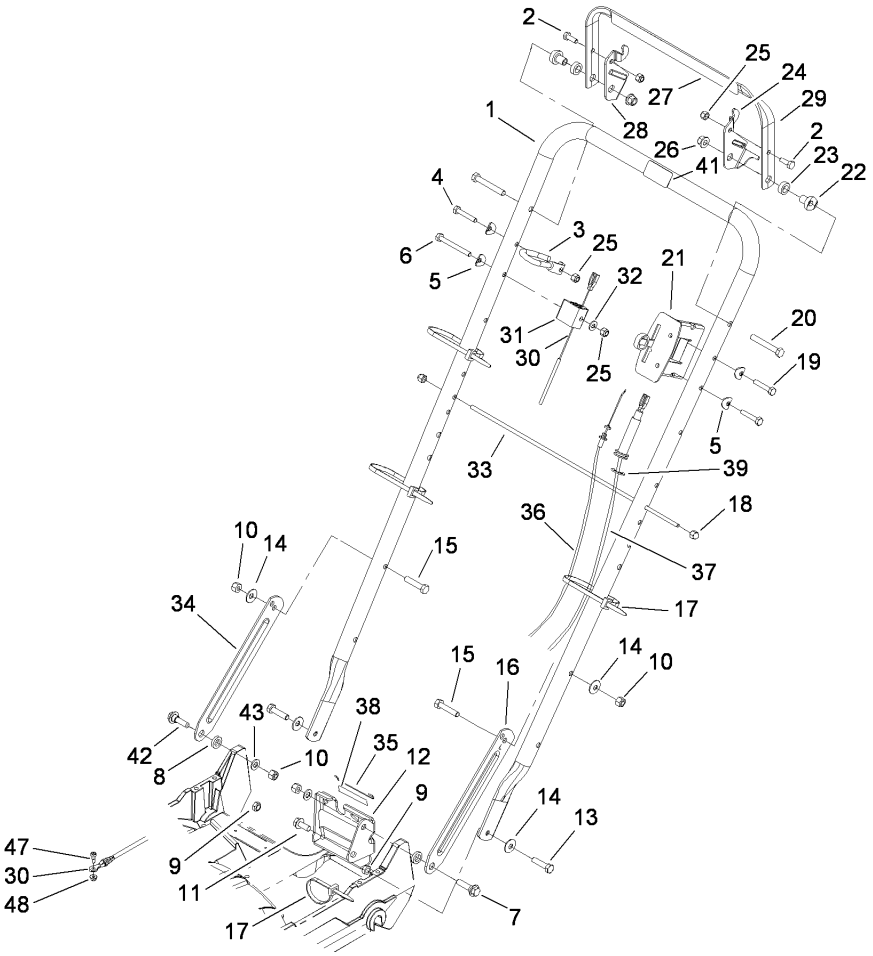

Handle Assembly

Ref	Part No.	Qty.	Description
1	98-2000-03	1	Handle
2	321-4	2	Screw-HH
3	46-8081	1	Guide-Rope
4	321-9	1	Screw-HH
5	3-7501	4	Washer
6	321-15	1	Screw-HH
7	27-7210	1	Screw-Shoulder
8	3-3287	2	Spacer-Latch, Handle
9	3296-47	2	Nut-Lock, NI
10	3296-29	4	Nut-Lock, NI
11	32144-70	1	Screw-HWHTF
12	74-1741	1	Bracket-Adjustment, Traction
13	322-6	2	Screw-HH
14	3290-456	4	Washer-Belleville
15	322-7	2	Screw-HH
16	100-3298-03	1	Latch-Handle, LH
17	3290-378	5	Tie-Cable
18	32111-7	2	Nut-Cap
19	321-13	2	Screw-HH
20	322-11	2	Screw-HH
21	108-2645	1	Control-Head, Throttle
22	49-1630	2	Spacer-Support
23	256-276	2	Spacer-Nylon
24	66-5350	1	Lever-Control

Ref	Part No.	Qty.	Description
25	3296-42	4	Nut-Lock, NI
26	3296-58	2	Nut-Lock, NI
27	106-0690	1	Decal-Traction
28	77-5270	1	Lever-Control
29	61-8270-03	1	Bar-Control
30	114-3483	1	Cable-Brake, Control
31	46-6980	1	Support-Cable
32	3256-22	1	Washer-Flat
33	48-2810	1	Rod-Support, Bag
34	100-3297-03	1	Latch-Handle, RH
35	46-7030	1	Retainer-Cable
36	74-1791	1	Cable-Traction
37	106-0888	1	Throttle Cable ASM
38	74-1970	1	Decal-Position, Gear
39	32151-86	2	E-Ring
41	98-4387	1	Decal-Protection, Ear
42	27-7211	1	Screw-Shoulder
43	3256-23	2	Washer-Flat
47	94-9422	1	Screw-Shoulder
48	32128-17	1	Nut-Lock, Flange

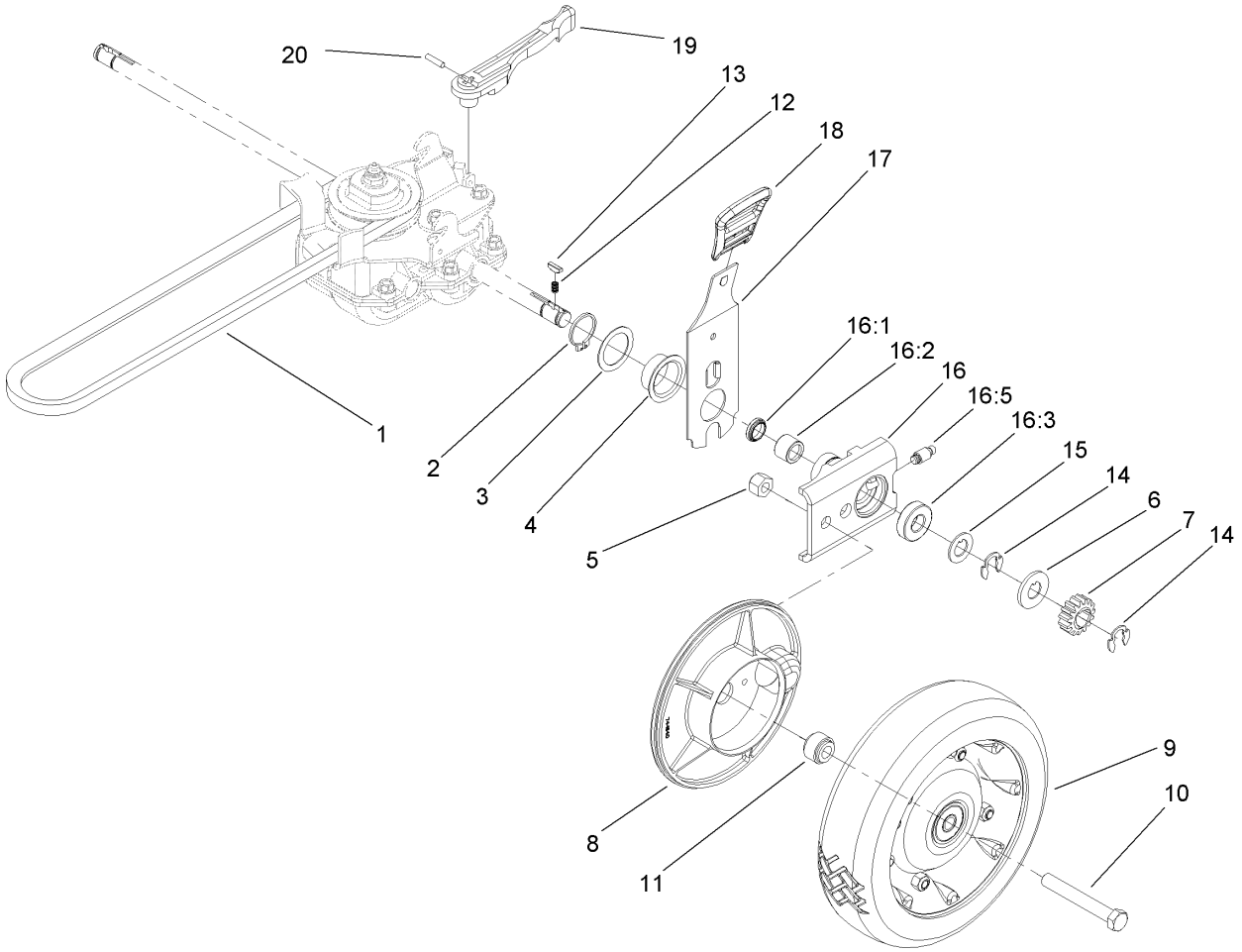

Rear Drive and Wheel Assembly

Ref	Part No.	Qty.	Description
1	36-8070	1	V-Belt
2	32151-36	2	Ring-Retaining
3	74-1810	2	Washer
4	48-2170	2	Cap-End
5	32152-2	2	Nut-Lock, Cone
6	62-3830	2	Washer-Thrust, Outer
7	39-9160	2	Gear-Pinion
8	74-1640	2	Cover-Wheel
9	100-2860	2	Wheel And Tire ASM
10	323-13	2	Screw-HH
11	74-1650	2	Spacer-Cover, Wheel
12	39-9650	2	Spring-Compression
13	612066	2	Key
14	32151-68	4	Ring-Retaining
15	49-7700	2	Washer-Thrust, Outer
16	74-1851	2	Pivot Arm ASM
16:1	47-6730	1	Seal-Oil
16:2	48-2060	1	Bearing-Roller
16:3	52-2450	1	Bearing-Wheel
16:5	92-6316	1	Zerk
17	110-0538	2	Rear Spring Arm ASM
18	110-0549	2	Knob-HOC
19	74-1960	1	Lever-Shift
20	32121-99	1	Pin-Coil

Ref	Part No.	Qty.	Description
❶99	106-0975	1	Grass Bag ASM

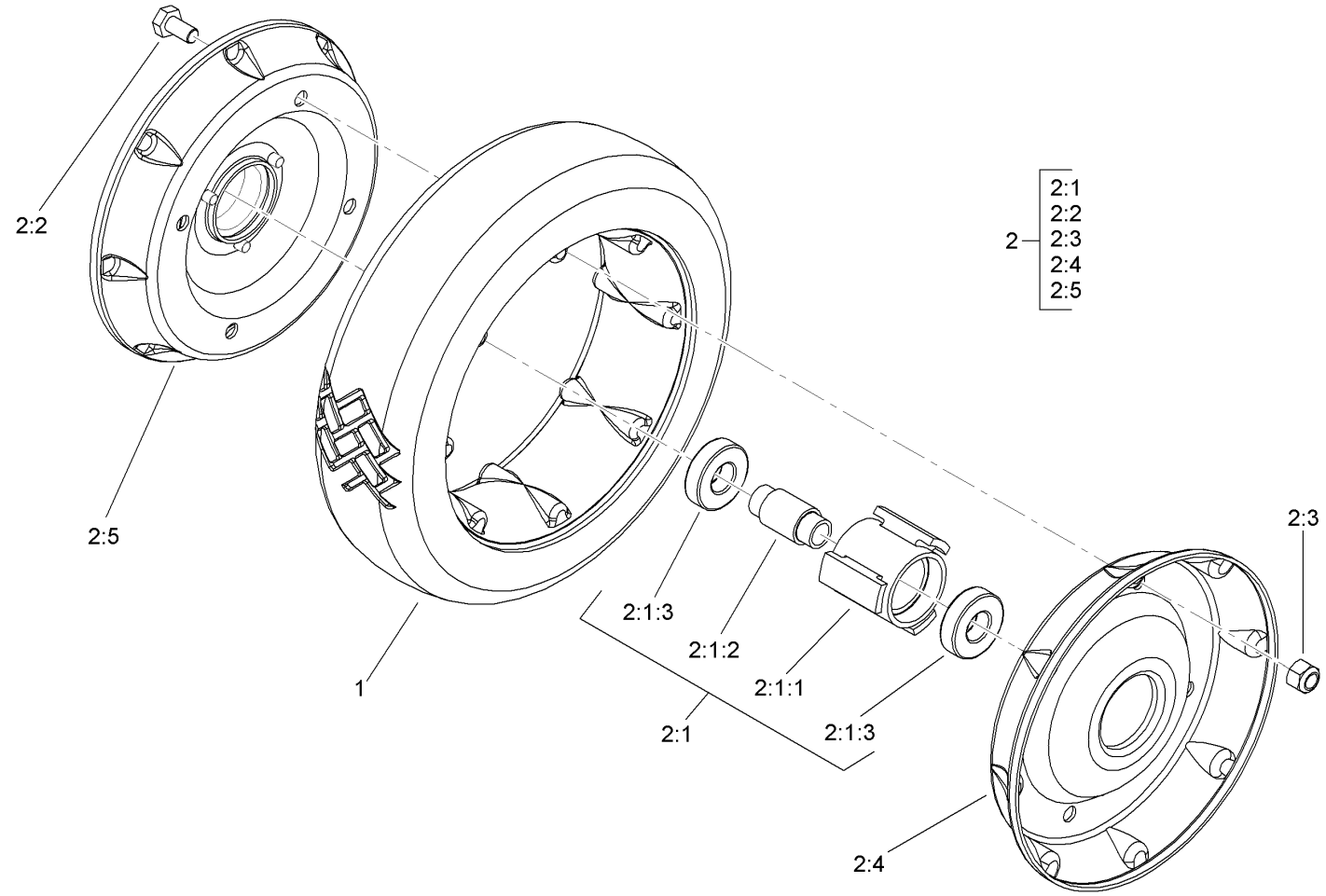

Rear Wheel Assembly No. 100-2860

Ref	Part No.	Qty.	Description
1	53-7740	1	Tire
❷2		1	Wheel ASM
❷2:1		1	Hub And Bearing ASM
2:1:1	52-2410	1	Hub-Bearing
2:1:2	52-2440	1	Spacer-Bearing
2:1:3	52-2450	2	Bearing-Wheel
2:2	321-2	4	Screw-HH
2:3	3296-42	4	Nut-Lock, NI
2:4	53-7780-06	1	Plate-Wheel, Half
2:5	92-4957-06	1	Wheel Half And Gear ASM

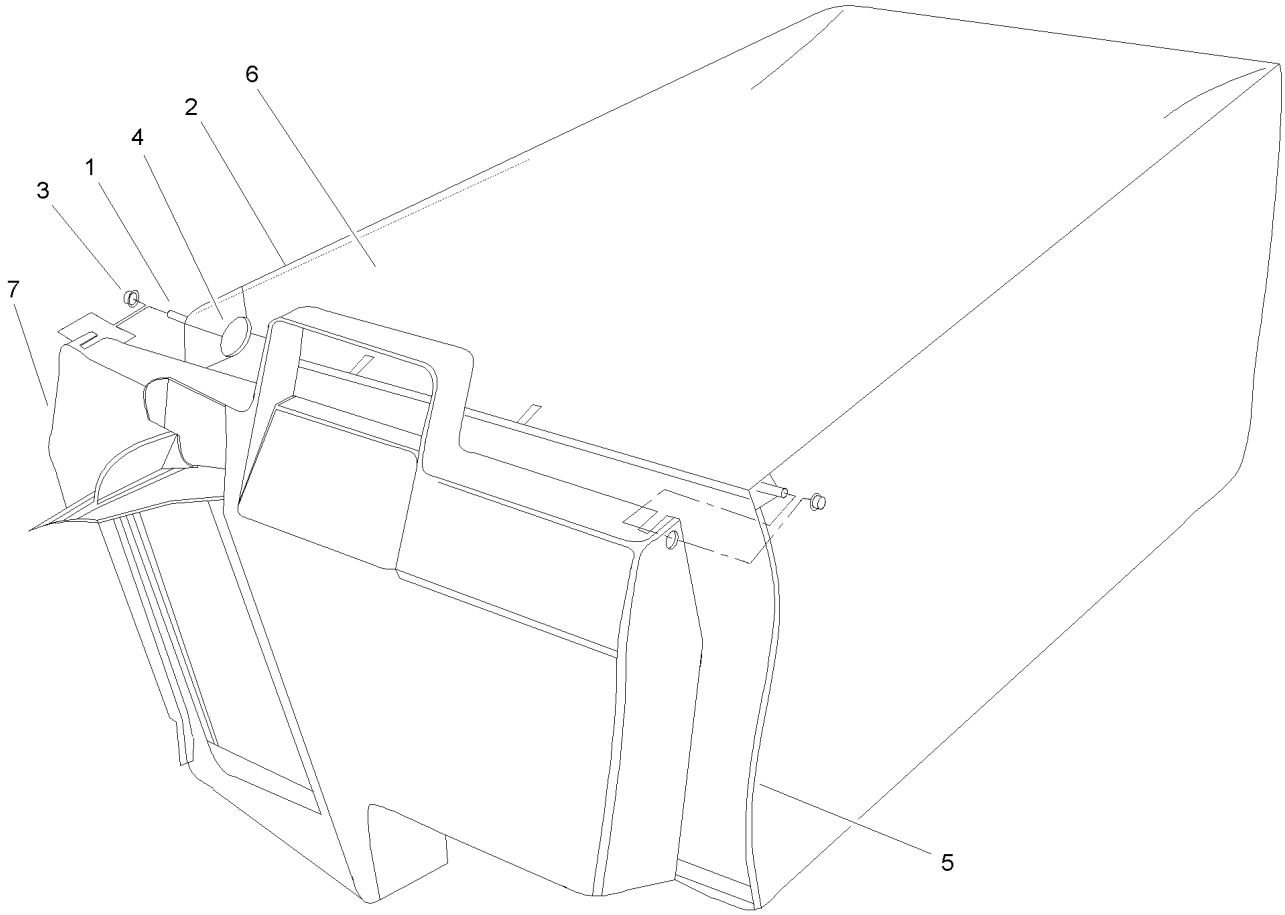

Grass Bag Assembly No. 106-0975

Ref	Part No.	Qty.	Description
1	33-4820	1	Hinge-Door, Bag
2	42-4030	1	Frame-Bag, Upper
3	3290-422	2	Nut-Push
4	36-6910	2	Spring
5	42-4020	1	Frame-Bag
6	106-0926	1	Bag-Grass
7	48-2840	1	Door-Bag, Grass

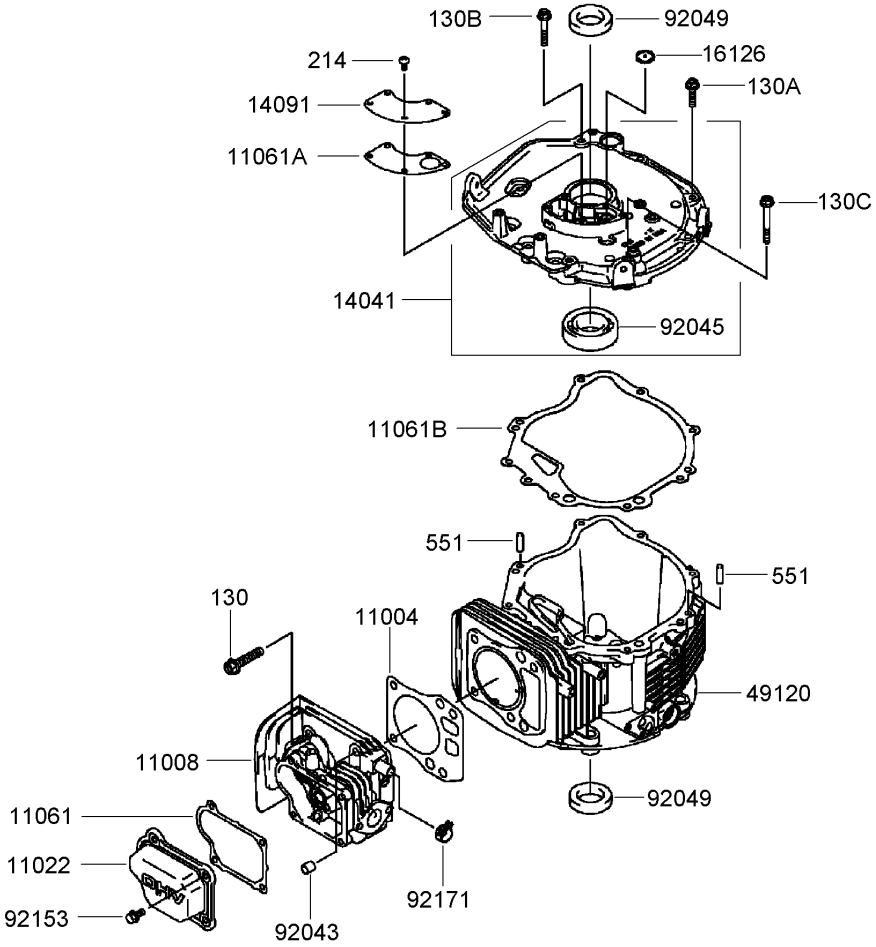

Cylinder and Crankcase Assembly
Kawasaki FJ180V-AS31

Ref	Part No.	Qty.	Description
❸11004	11004-7020	1	Gasket-Head
❸11008	11008-7025	1	Head-Cylinder
❸11022	11022-7005	1	Case-Rocker
❸11061	11061-7023	1	Gasket-Case, Rocker
❸11061A	11061-7031	1	Gasket-Breather
❸11061B	11061-7060	1	Gasket-Cover, Crankcase
❸14041	14041-7010	1	Cover
❸14091	14091-7010	1	Cover-Breather
❸16126	16126-7014	1	Valve-Breather
❸49120	49120-7082	1	Crankcase
❸92043	92043-7001	2	Pin
❸92045	92045-1207	1	Bearing-Ball (62/28)
❸92049	92049-7008	2	Seal-Oil (28-44-9 T C)
❸92153	92153-7043	4	Bolt (6X12)
❸92171	92171-7024	1	Clamp
❸130	130CA0840	4	Bolt-Flanged (8X40)
❸130A	130G0625	7	Bolt-Flanged (6X25)
❸130B	130G0635	1	Bolt-Flanged (6X35)
❸130C	130G0650	1	Bolt-Flanged,6X50
❸214	214B0510	5	Screw-Pan (5X10)
❸551	551A0612	2	Pin-Dowel (6X12)

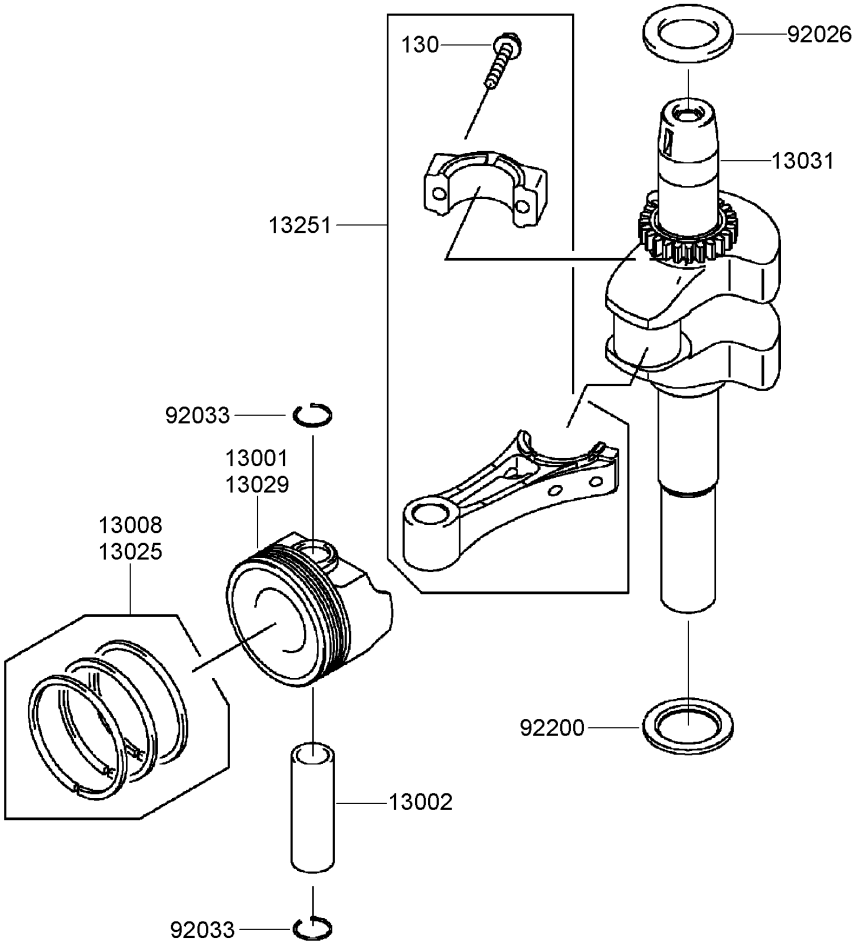

Piston and Crankshaft Assembly
Kawasaki FJ180V-AS31

Ref	Part No.	Qty.	Description
❸13001	13001-7022	1	Piston-Engine
❸13002	13002-7001	1	Pin-Piston
❸13008	13008-7002	1	Piston Ring Set
❸13025	13025-7006	1	Piston Ring Set (L 0.50)
❸13029	13029-7005	1	Piston-Engine (L 0.50)
❸13031	13031-7078	1	Crankshaft
❸13251	13251-7011	1	Connecting Rod ASM
❸92026	92026-7020	1	Spacer
❸92033	92033-7002	2	Ring-Snap
❸92200	92200-7042	1	Washer (28X41.5X2.5)
❸130	130G0630	2	Bolt-Flanged (6X30)

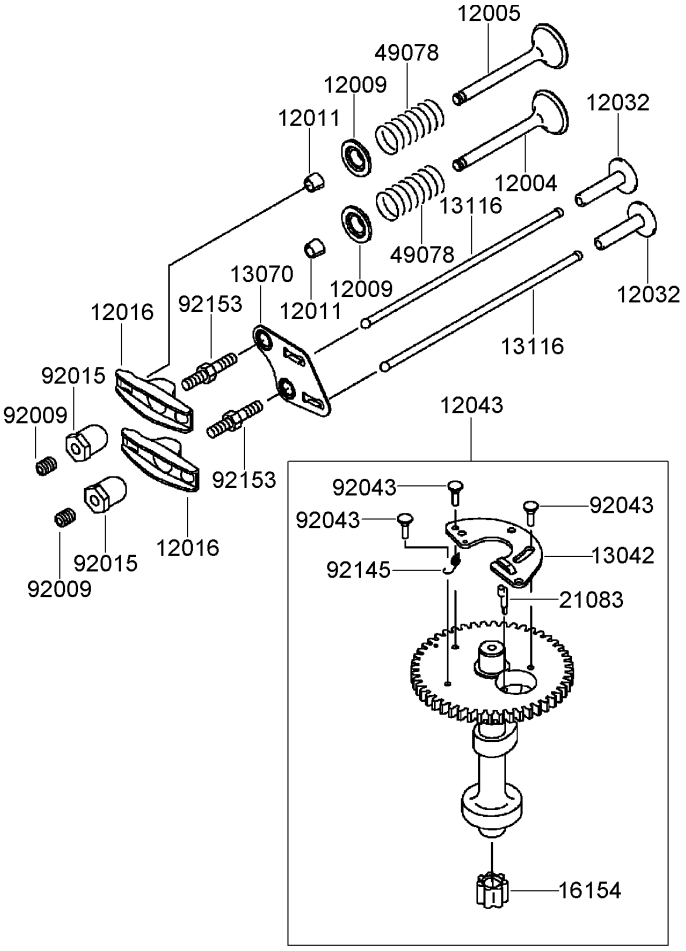

Valve and Camshaft Assembly
Kawasaki FJ180V-AS31

Ref	Part No.	Qty.	Description
❸12004	12004-7005	1	Valve-Intake
❸12005	12005-7006	1	Valve-Exhaust
❸12009	12009-7001	2	Retainer-Spring, Valve
❸12011	12011-2056	4	Collet
❸12016	12016-7008	2	Arm-Rocker
❸12032	12032-7001	2	Tappet
❸12043	12043-7005	1	Camshaft Valve ASM
❸13042	13042-7006	1	Weight
❸13070	13070-7009	1	Guide
❸13116	13116-7003	2	Rod-Push
❸16154	16154-7004	1	Rotor-Pump
❸21083	21083-7009	1	Arm
❸49078	49078-7001	2	Spring-Valve, Engine
❸92009	92009-2341	2	Screw
❸92015	92015-2253	2	Nut
❸92043	92043-7006	3	Pin
❸92145	92145-7016	1	Spring
❸92153	92153-7019	2	Bolt

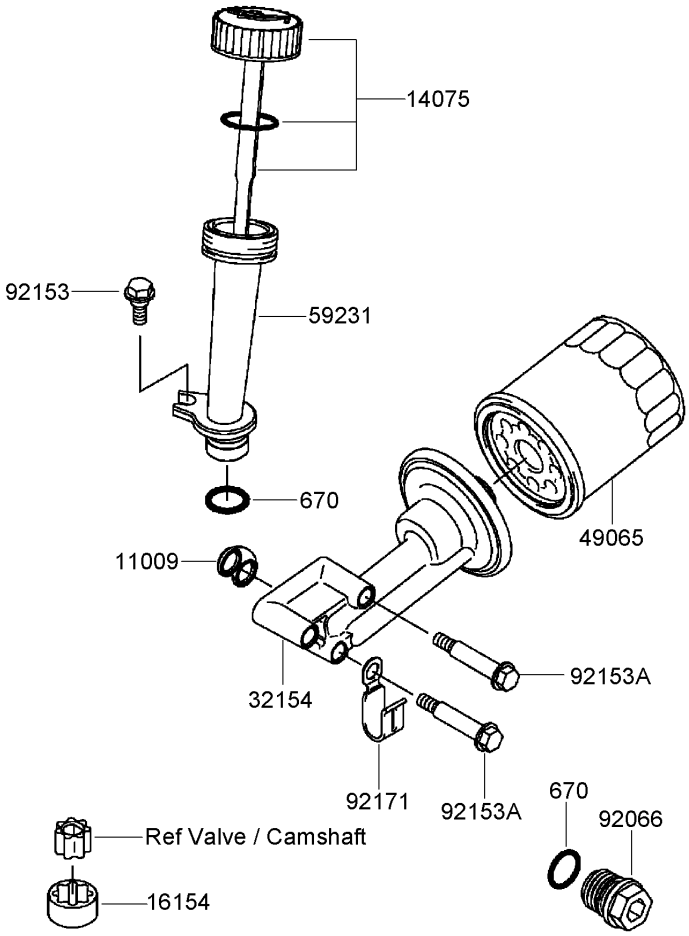

Lubrication Equipment Assembly
Kawasaki FJ180V-AS31

Ref	Part No.	Qty.	Description
❸11009	11009-2860	1	Gasket
❸14075	14075-7007	1	Cap ASM
❸16154	16154-7002	1	Rotor-Pump
❸32154	32154-7018	1	Pipe
❸49065	49065-2078	1	Filter-Oil
❸59231	59231-7004	1	Filler
❸92066	92066-7003	1	Plug
❸92153	92153-7007	1	Bolt
❸92153A	92153-7028	3	Bolt
❸92171	92171-7008	1	Clamp
❸670	670D2016	2	O-Ring (16Mm)

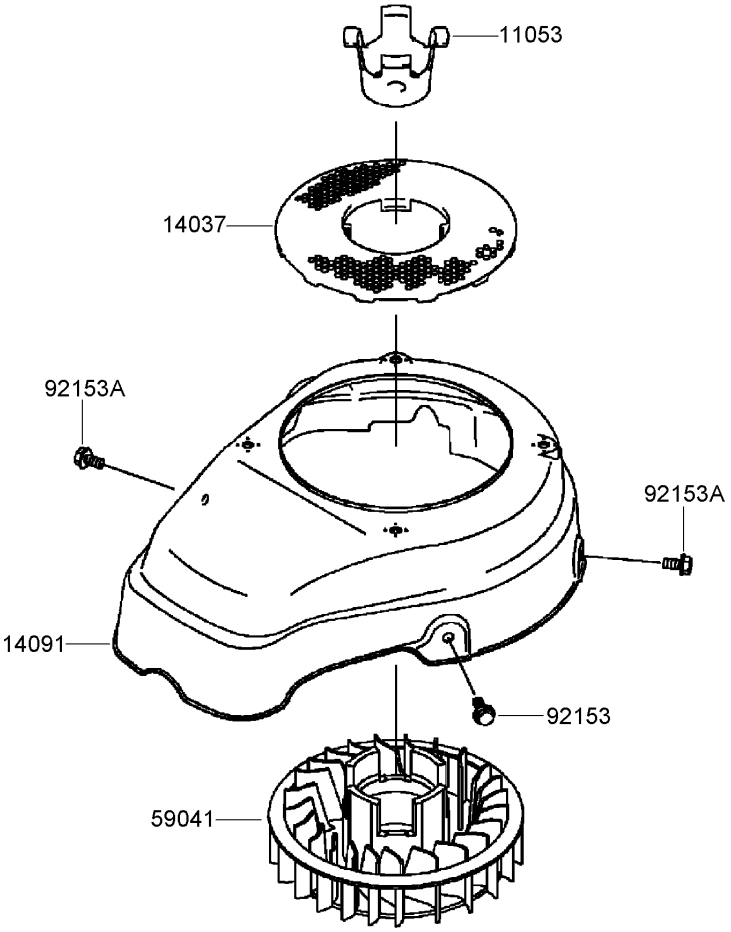

Cooling Equipment Assembly
Kawasaki FJ180V-AS31

Ref	Part No.	Qty.	Description
❸11053	11053-7009	1	Bracket-Fan
❸14037	14037-7017	1	Screen
❸14091	14091-7053	1	Cover
❸59041	59041-7009	1	Fan
❸92153	92153-7007	1	Bolt
❸92153A	92153-7043	2	Bolt (6X12)

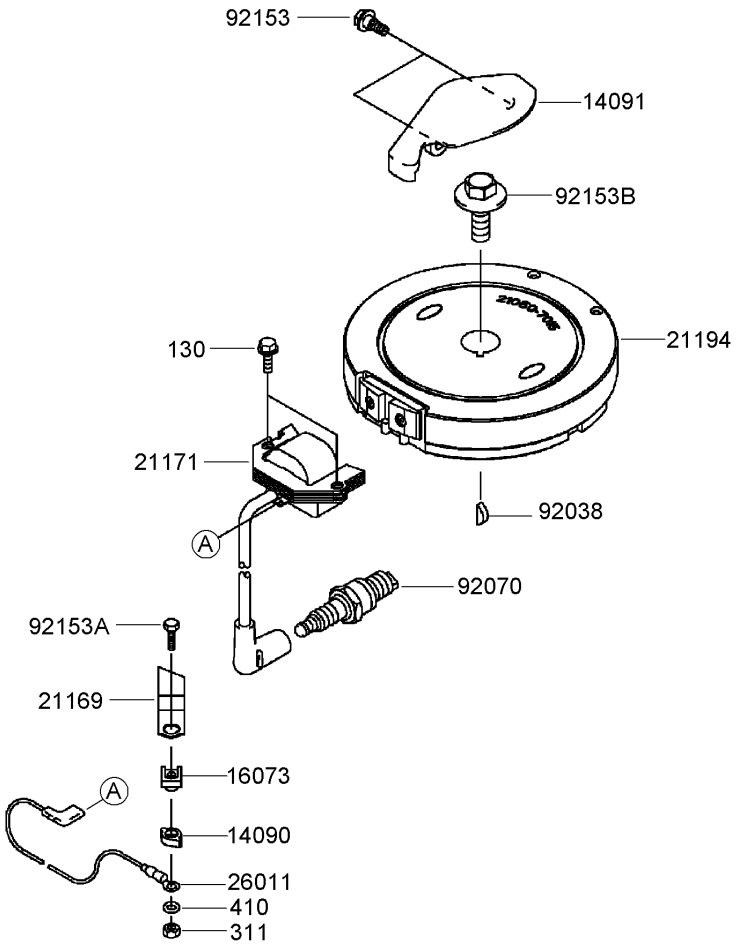

Electric Equipment Assembly
Kawasaki FJ180V-AS31

Ref	Part No.	Qty.	Description
❸14090	14090-2108	1	Cover
❸14091	14091-7036	1	Cover
❸16073	16073-2192	1	Insulator
❸21169	21169-2071	1	Terminal
❸21171	21171-7030	1	Ignition Coil ASM
❸21194	21194-7024	1	Flywheel
❸26011	26011-7013	1	Wire-Lead
❸92038	92038-2077	1	Key
❸92070	92070-2088	1	Spark Plug, B P R 5E S (N G K) Solid
❸92153	92153-7007	2	Bolt
❸92153A	92153-7012	1	Bolt (4X16)
❸92153B	92153-7030	1	Bolt (12X30)
❸130	130B0620	2	Bolt-Flanged (6X20)
❸311	311B0400	1	Nut-Hex (4Mm)
❸410	410B0400	1	Washer-Plain, S (4Mm)

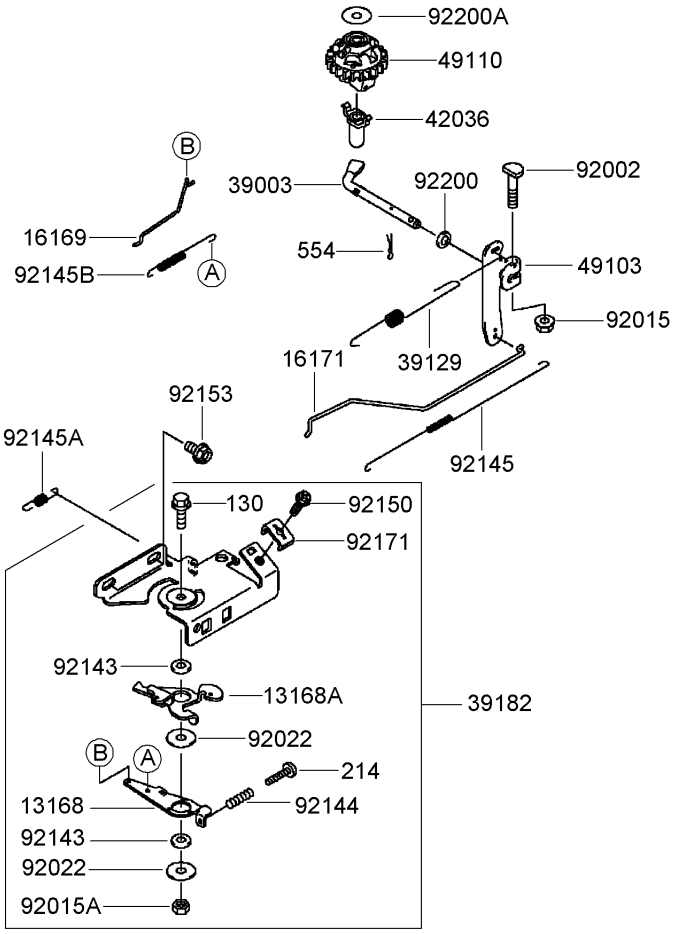

Control Equipment Assembly
Kawasaki FJ180V-AS31

Ref	Part No.	Qty.	Description
❸13168	13168-7028	1	Lever
❸13168A	13168-7032	1	Lever
❸16169	16169-7015	1	Link-Choke
❸16171	16171-7015	1	Link-Throttle
❸39003	39003-7002	1	Arm-Pivot
❸39129	39129-7014	1	Spring-Governor
❸39182	39182-7007	1	Panel-Assy-Control
❸42036	42036-2051	1	Sleeve
❸49103	49103-7005	1	Arm-Governor
❸49110	49110-7002	1	Governor ASM
❸92002	92002-2269	1	Bolt (6X28)
❸92015	92015-1193	1	Nut
❸92015A	92015-2051	1	Nut
❸92022	92022-2372	2	Washer (6X19X1.2)
❸92143	92143-2135	2	Collar (6X13X2.3)
❸92144	92144-2266	1	Spring
❸92145	92145-7025	1	Spring-Throttle
❸92145A	92145-7032	1	Spring
❸92145B	92145-7043	1	Spring
❸92150	92150-2182	1	Bolt (5X18)
❸92153	92153-7043	2	Bolt (6X12)
❸92171	92171-7016	1	Clamp
❸92200	92200-2029	1	Washer (6.5X11.5X2.0)
❸92200A	92200-2036	1	Washer (6.2X20X0.5)

Ref	Part No.	Qty.	Description
❸130	130B0618	1	Bolt-Flanged
❸214	214B0420	1	Screw-Pan +- (4X20)
❸554	554A0600	1	Pin-Snap (1.2X21.2)

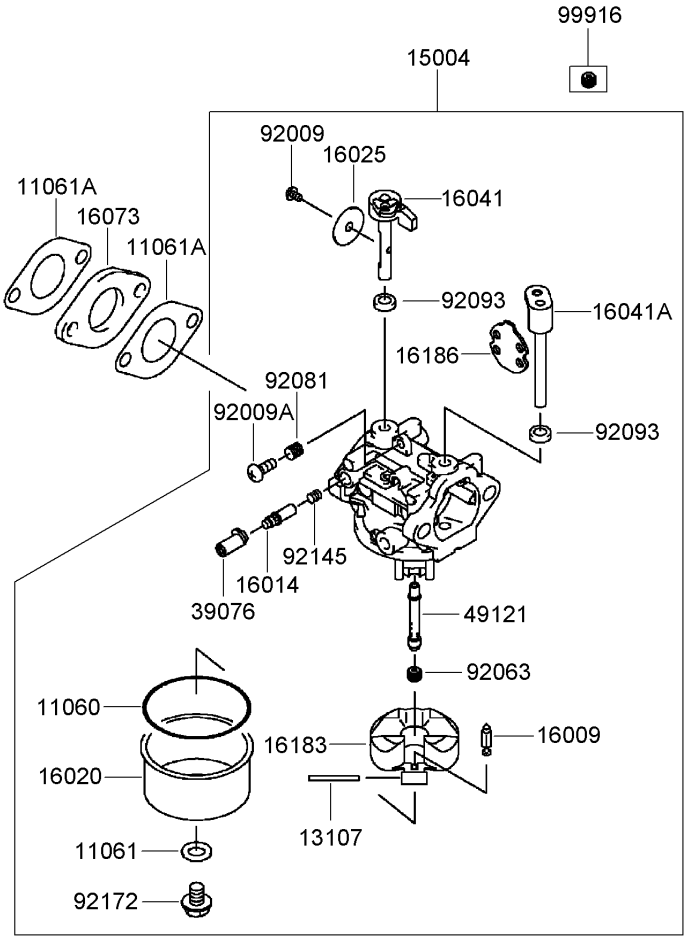

Carburetor Assembly
Kawasaki FJ180V-AS31

Ref	Part No.	Qty.	Description
❸11060	11060-2190	1	Gasket
❸11061	11061-7010	1	Gasket-Screw
❸11061A	11061-7015	2	Gasket-Insulator
❸13107	13107-7024	1	Shaft
❸15004	15004-7010	1	Carburetor ASM
❸16009	16009-2136	1	Needle-Jet
❸16014	16014-7008	1	Screw-Air, Pilot
❸16020	16020-7004	1	Chamber-Float
❸16025	16025-7007	1	Valve-Throttle
❸16041	16041-7019	1	Shaft-Carburetor
❸16041A	16041-7020	1	Shaft-Carburetor
❸16073	16073-7006	1	Insulator
❸16183	16183-2002	1	Float ASM
❸16186	16186-7003	1	Choke Valve ASM
❸39076	39076-7001	1	Limiter
❸49121	49121-7014	1	Nozzle-Main
❸92009	92009-2083	1	Screw
❸92009A	92009-2349	1	Screw
❸92063	92063-7067	1	Jet-Main (No 70)
❸92081	92081-2234	1	Spring
❸92093	92093-2100	2	Seal
❸92145	92145-7015	1	Spring
❸92172	92172-7002	1	Screw
❸99916	99916-7007	1	Main Jet K H I Parts Kit

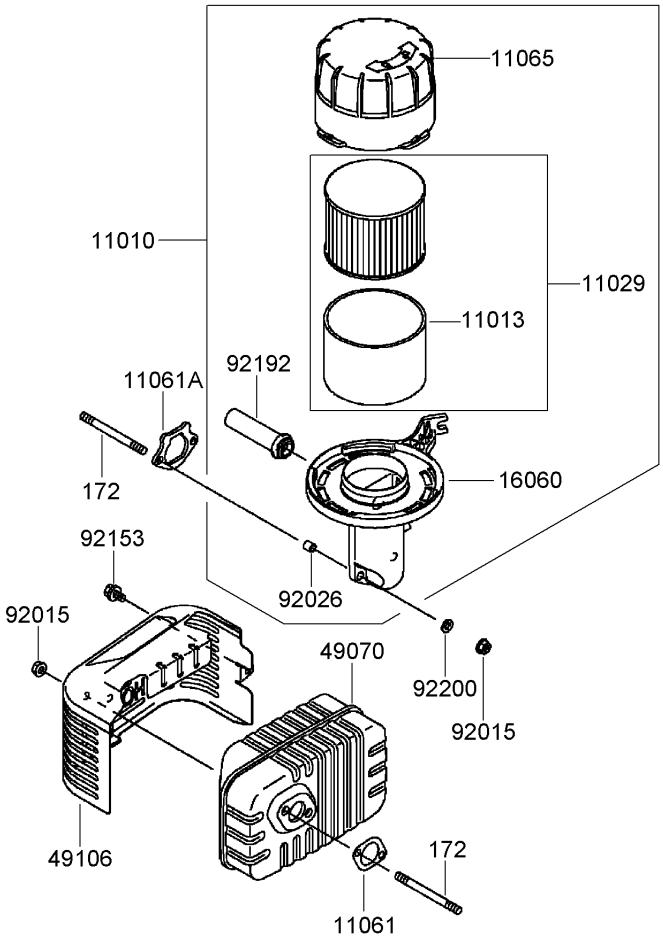

Air Filter and Muffler Assembly
Kawasaki FJ180V-AS31

Ref	Part No.	Qty.	Description
❸11010	11010-7021	1	Air Filter ASM
❸11013	11013-7037	1	Element-Filter, Air
❸11029	11029-7023	1	Air Filter Element ASM
❸11061	11061-7029	1	Gasket-Muffler
❸11061A	11061-7075	1	Gasket-Pipe, Intake
❸11065	11065-7018	1	Cap
❸16060	16060-7026	1	Pipe-Intake
❸49070	49070-7022	1	Muffler
❸49106	49106-7021	1	Cover-Muffler
❸92015	92015-1193	4	Nut
❸92026	92026-7021	2	Spacer
❸92153	92153-7023	1	Bolt (6X10)
❸92192	92192-7083	1	Tube
❸92200	92200-7022	2	Washer
❸172	172G0680	4	Bolt-Stud (6X80)

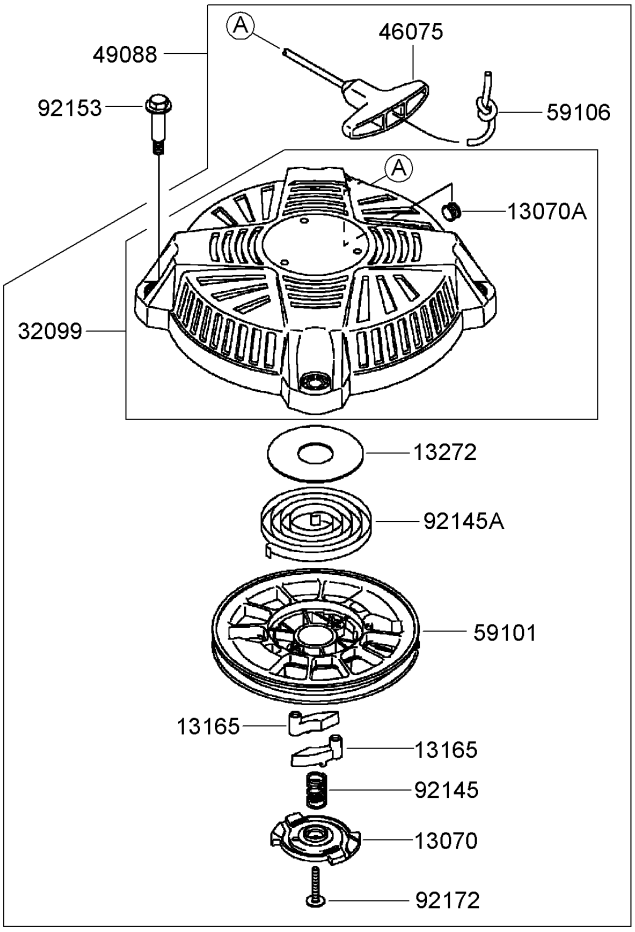

Starter Assembly
Kawasaki FJ180V-AS31

Ref	Part No.	Qty.	Description
❸13070	13070-7014	1	Guide
❸13070A	13070-7015	1	Guide
❸13165	13165-7002	2	Pawl-Starter, Recoil
❸13272	13272-7001	1	Plate
❸32099	32099-7004	1	Case-Starter, Recoil
❸46075	46075-7002	1	Grip
❸49088	49088-7025	1	Starter-Recoil
❸59101	59101-7002	1	Reel-Starter, Recoil
❸59106	59106-7003	1	Rope (2200Mm)
❸92145	92145-7052	1	Spring
❸92145A	92145-7054	1	Spring
❸92153	92153-7021	4	Bolt (M6)
❸92172	92172-7030	1	Screw

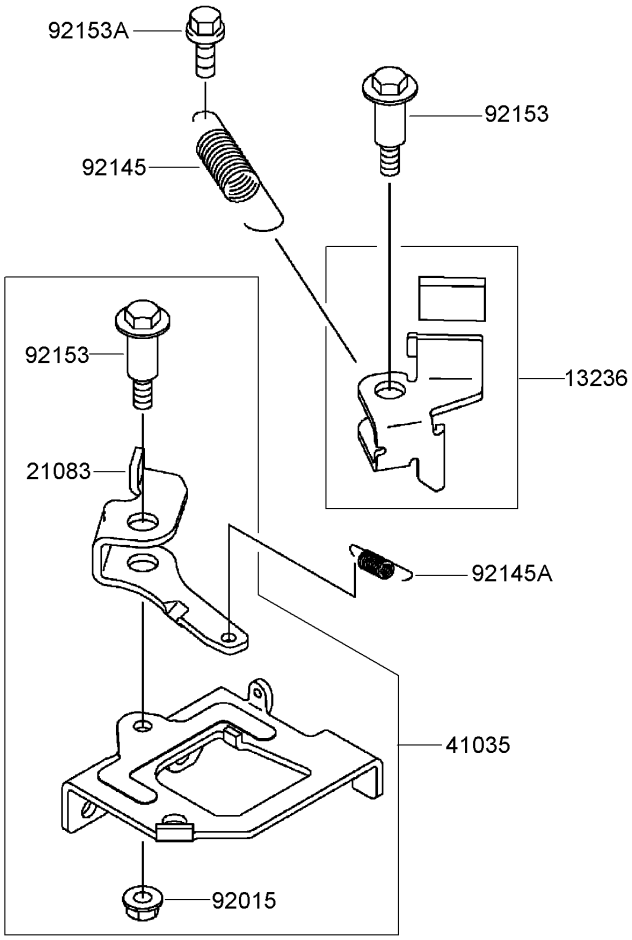

Brake and Cover Assembly
Kawasaki FJ180V-AS31

Ref	Part No.	Qty.	Description
❸13236	13236-7008	1	Lever
❸21083	21083-7016	1	Arm
❸41035	41035-7005	1	Brake Panel ASM
❸92015	92015-1193	1	Nut
❸92145	92145-7023	1	Spring
❸92145A	92145-7032	1	Spring
❸92153	92153-7020	2	Bolt
❸92153A	92153-7023	1	Bolt (6X10)

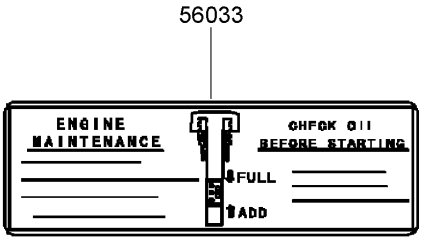

Label Assembly
Kawasaki FJ180V-AS31

Ref	Part No.	Qty.	Description
❸56033	56033-7003	1	Label-Manual
❸56070	56070-7001	1	Label-Warning

TORO®