FORM NO. 3315–600

TORO®

MODEL NO. 38195–3900001 & UP
MODEL NO. 38196–3900001 & UP

PARTS CATALOG

CCR1000™ SNOWTHROWER

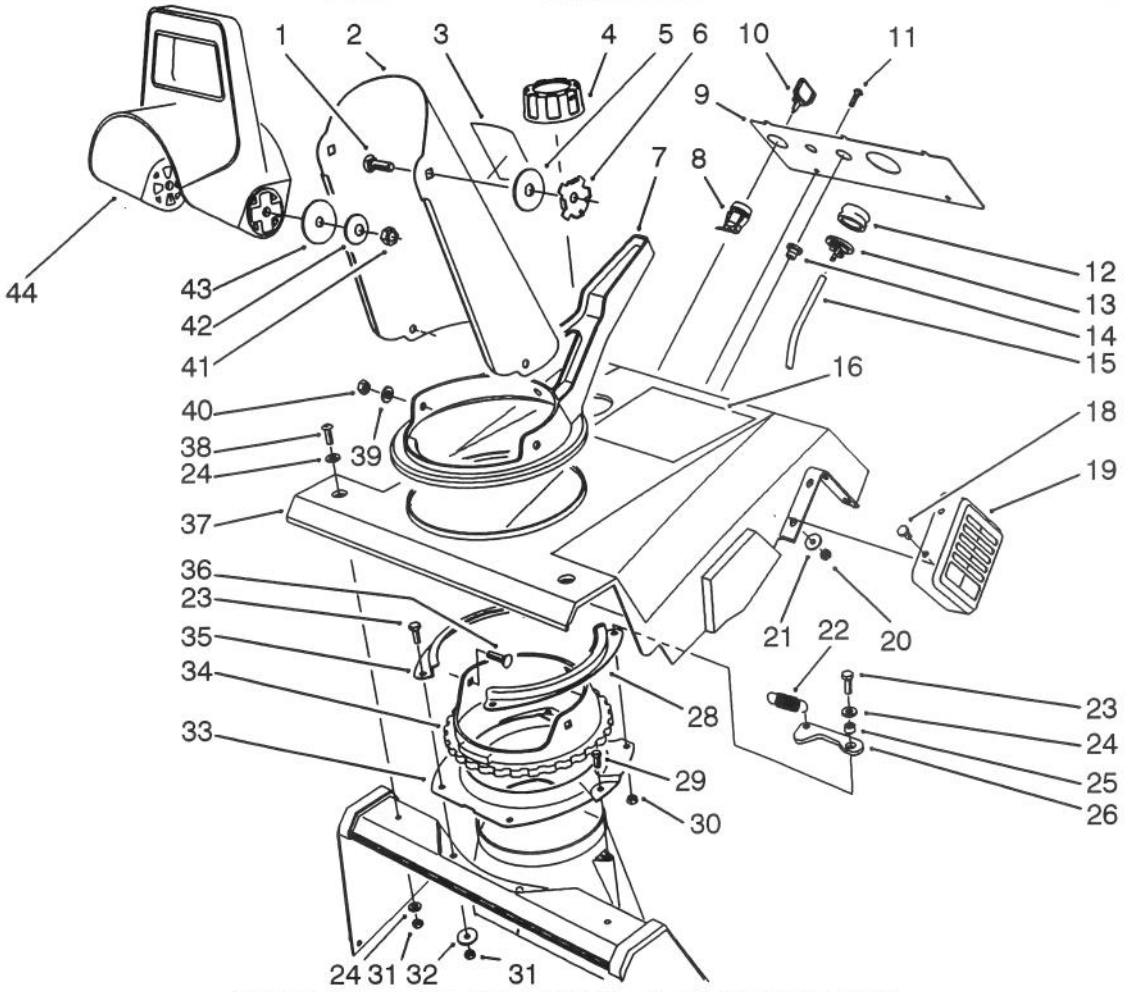

C–1005

UPPER SHROUD ASSEMBLY

Ref. No.	Part No.	Description	No. Used
1	3230–22	Bolt – Carriage	2
2	13–7979	Discharge Chute Assembly (Incl. Ref. #3) (Model No. 38195)	1
*	14–6119	Discharge Chute Assembly (Incl. Ref. #3 (Model No. 38196)	1
3	63–3740	Decal – Danger (Model No. 38195)	1
*	53–7660	Decal – Danger (Model No. 38196)	1
4	55–3573	Gas Cap Assembly	1
5	20–4320	Washer – Rubber	2
6	55–8950	Plate – Friction	2
7	71–4940	Handle – Chute	1
8	40–5940	Switch – On–Off	1

Ref. No.	Part No.	Description	No. Used
9	71–5140	Panel – Control (Model No. 38195)	1
*	77–5040	Panel – Control (Model No. 38196)	1
10	63–8360	Key – Ignition	1
11	32144–53	Screw – Slotted Flange Hd.	2
12	66–7460	Bulb – Primer	1
13	44–2750	Body – Primer	1
14	23–7470	Guide – Rope	1
15	44–3173	Hose – Primer	1
16	77–5210	Decal – CCR1000 E	1
18	3290–359	Screw – Hex. Hd. Cap	4
19	71–5340	Guard – Muffler	1
20	3296–2	Nut – Lock	4
21	3256–61	Washer – Flat	4
22	71–5590	Spring – Extension	1

*Not Illustrated

TPS

© The TORO Company –1992

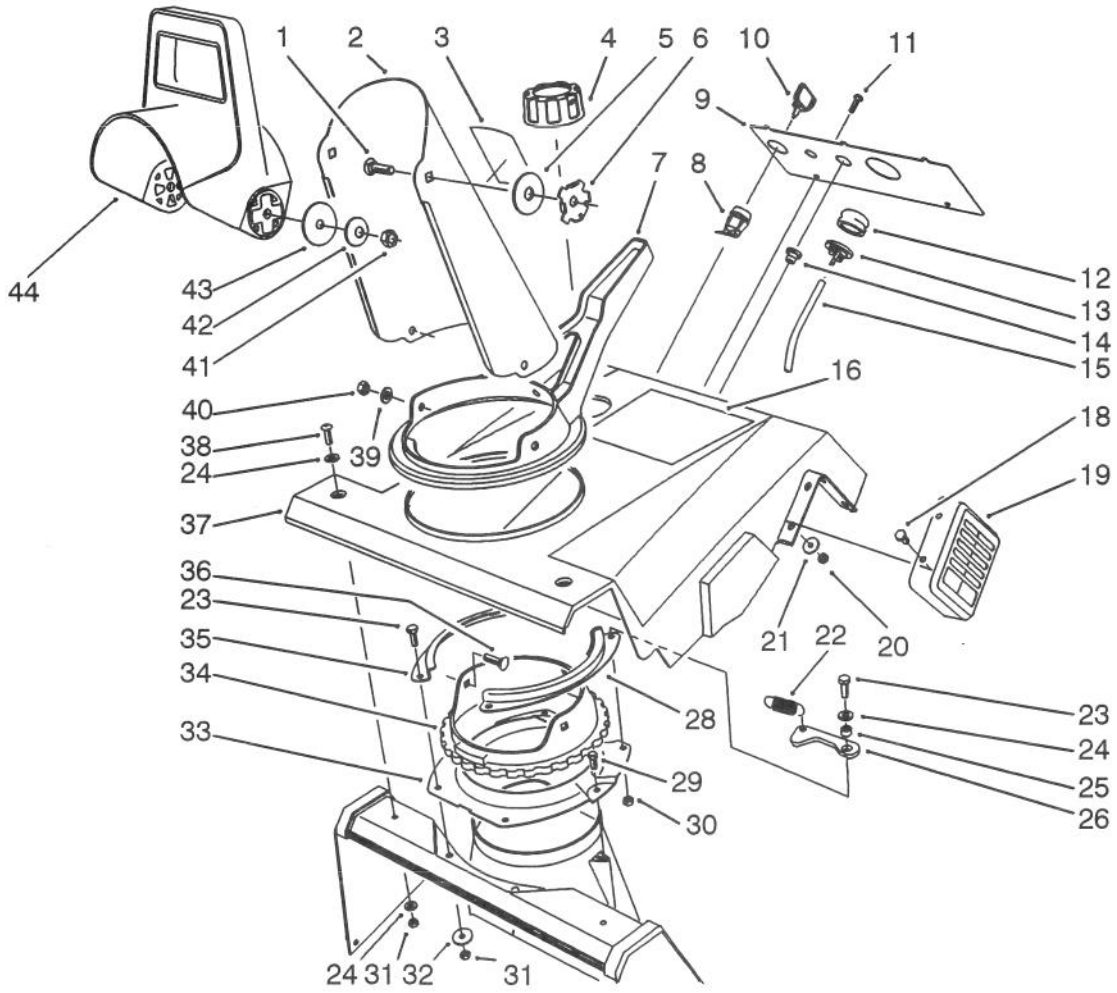

C–1005

UPPER SHROUD ASSEMBLY (Continued)

Ref. No.	Part No.	Description	No. Used
23	321–4	Screw – Hex. Hd. Cap	4
24	3256–22	Washer – Flat	5
25	55–9370	Spacer – Detent Arm	1
26	80–4610	Arm – Detent	1
28	71–4980	Retainer – Chute Ring L.H.	1
29	46–8092	Screw – Hex. Flange Hd.	2
30	3296–56	Nut – Lock	1
31	3296–42	Nut – Lock	5
32	3256–22	Washer – Flat	2
33	55–8921	Support – Chute Ring	1
34	71–4950	Ring – Chute	1

Ref. No.	Part No.	Description	No. Used
35	71–4990	Retainer – Chute Ring R.H.	1
36	3230–16	Bolt – Carriage	3
37	80–4810	Shroud – Upper	1
38	3250–32	Screw – Pan Hd.	2
39	3256–70	Washer – Flat	3
40	32149–1	Nut – Keps	3
41	3296–29	Nut – Lock	2
42	3290–456	Washer – Belleville	2
43	3256–68	Washer – Flat	2
44	56–2680	Deflector – Discharge	1

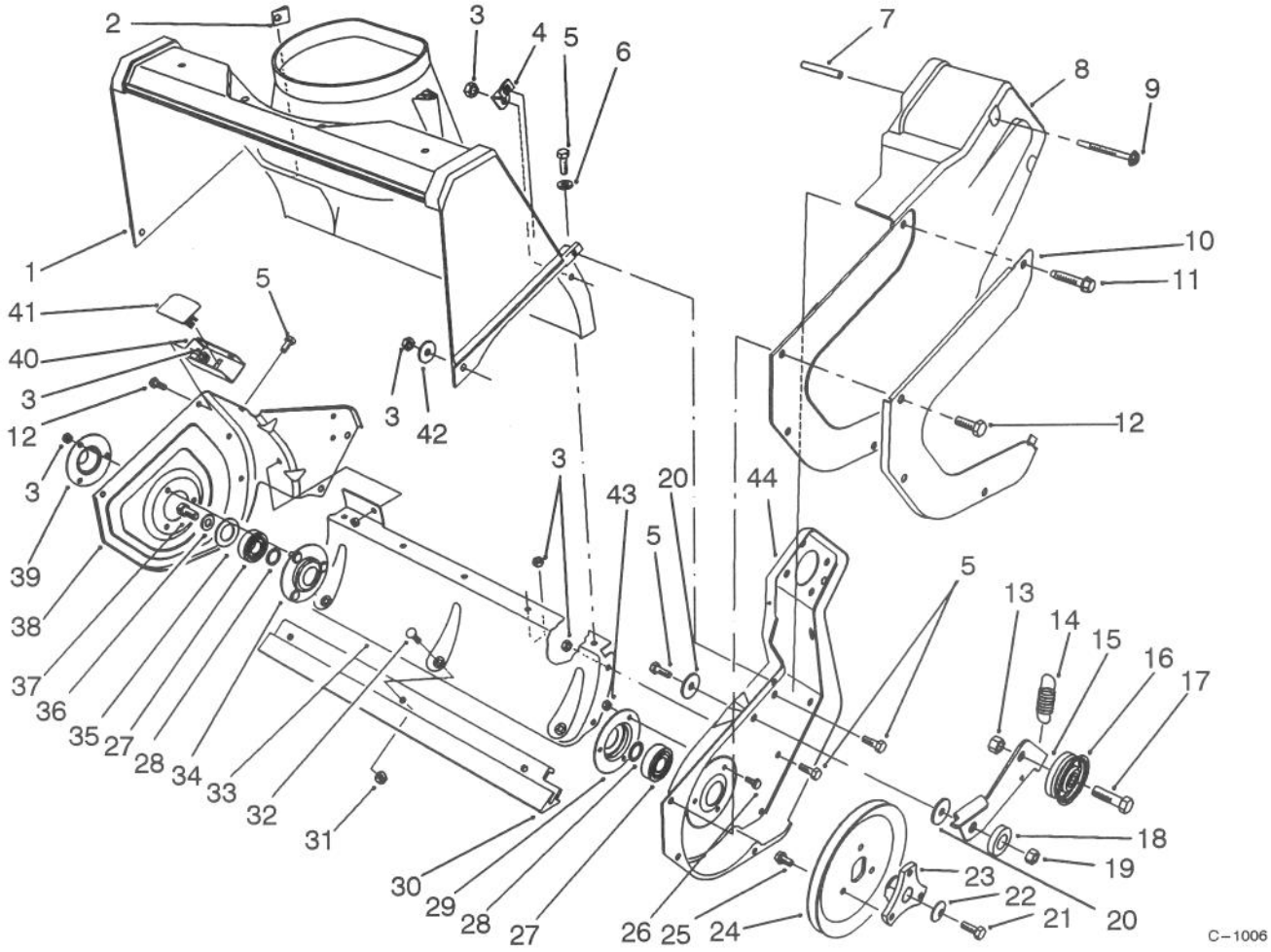

ROTOR HOUSING ASSEMBLY

Ref. No.	Part No.	Description	No. Used
1	55–8700	Housing – Rotor	1
2	32115–14	Nut – U	1
3	3296–42	Nut – Lock	20
4	55–9430	Bracket – Z	1
5	321–4	Screw – Cap Hex. Hd.	10
6	3256–22	Washer – Flat	5
7	57–3830	Tube	2
8	71–5030	Cover – Drive	1
9	71–5350	Screw – Thread Forming	2
10	71–5150	Guard – Drive Cover	1
11	36–3860	Screw – Special	1
12	32105–15	Screw – Hex. Flange Hd.	8
13	3296–39	Nut – Lock	1
14	71–5470	Spring – Brake	1
15	71–5160	Arm – Brake	1
16	71–5260	Pulley – Idler	1
17	323–44	Screw – Cap Hex. Hd.	1
18	80–4620	Washer – Spacer	1
19	3296–56	Nut – Lock	1
20	3256–55	Washer – Pivot	2
21	321–30	Screw – Hex. Hd. Cap	1
22	3290–456	Washer – Belleville	1

Ref. No.	Part No.	Description	No. Used
23	71–5070	Hub – Pulley	1
24	71–5410	Pulley – Rotor	1
25	12–3270	Screw – Hex. Flange Hd.	3
26	32105–8	Screw – Hex. Hd.	3
27	38–7820	Bearing – Ball	2
28	52–7280	Washer – Thrust	2
29	38–8620	Flange – Bearing	1
30	71–5390	Scraper	1
31	32128–10	Nut – Flange Lock	3
32	3229–11	Bolt – Carriage	3
33	71–4930	Housing – Lower	1
34	52–9110	Flange – Bearing	1
35	52–7270	Washer – Rubber	1
36	3256–24	Washer – Flat	1
37	3234–25	Screw – Cap Hex. Hd.	1
38	71–4920	Sideplate – R.H.	1
39	52–7290	Retainer – Bearing	1
40	71–5310	Bracket – Support	1
41	71–5270	Cover – Bracket	1
42	3256–67	Washer – Flat	2
43	3296–2	Nut – Lock	3
44	71–4911	Sideplate – L.H.	1

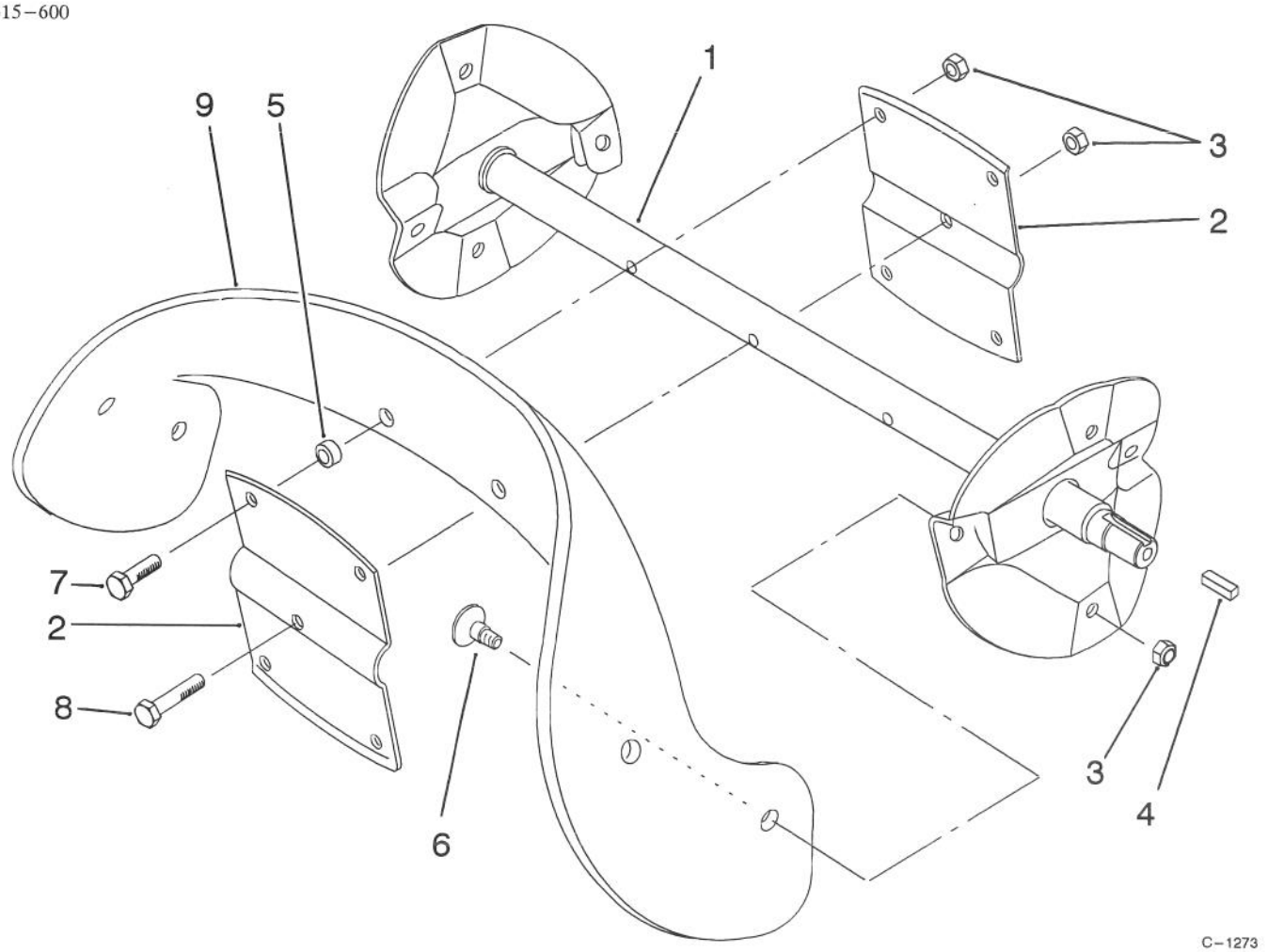

C–1273

ROTOR ASSEMBLY

Ref. No.	Part No.	Description	No. Used
1	55–9202	Rotor Shaft Assembly	1
2	66–6600	Plate – Rotor	2
3	3296–56	Nut – Lock	13
4	10–8040	Key – Square	1
5	55–9370	Spacer	4

Ref. No.	Part No.	Description	No. Used
6	84–1971	Screw – Countersunk	8
7	321–4	Screw – Cap Hex. Hd.	4
8	321–8	Screw – Cap Hex. Hd.	1
9	88–0781	Blade – Rotor	2

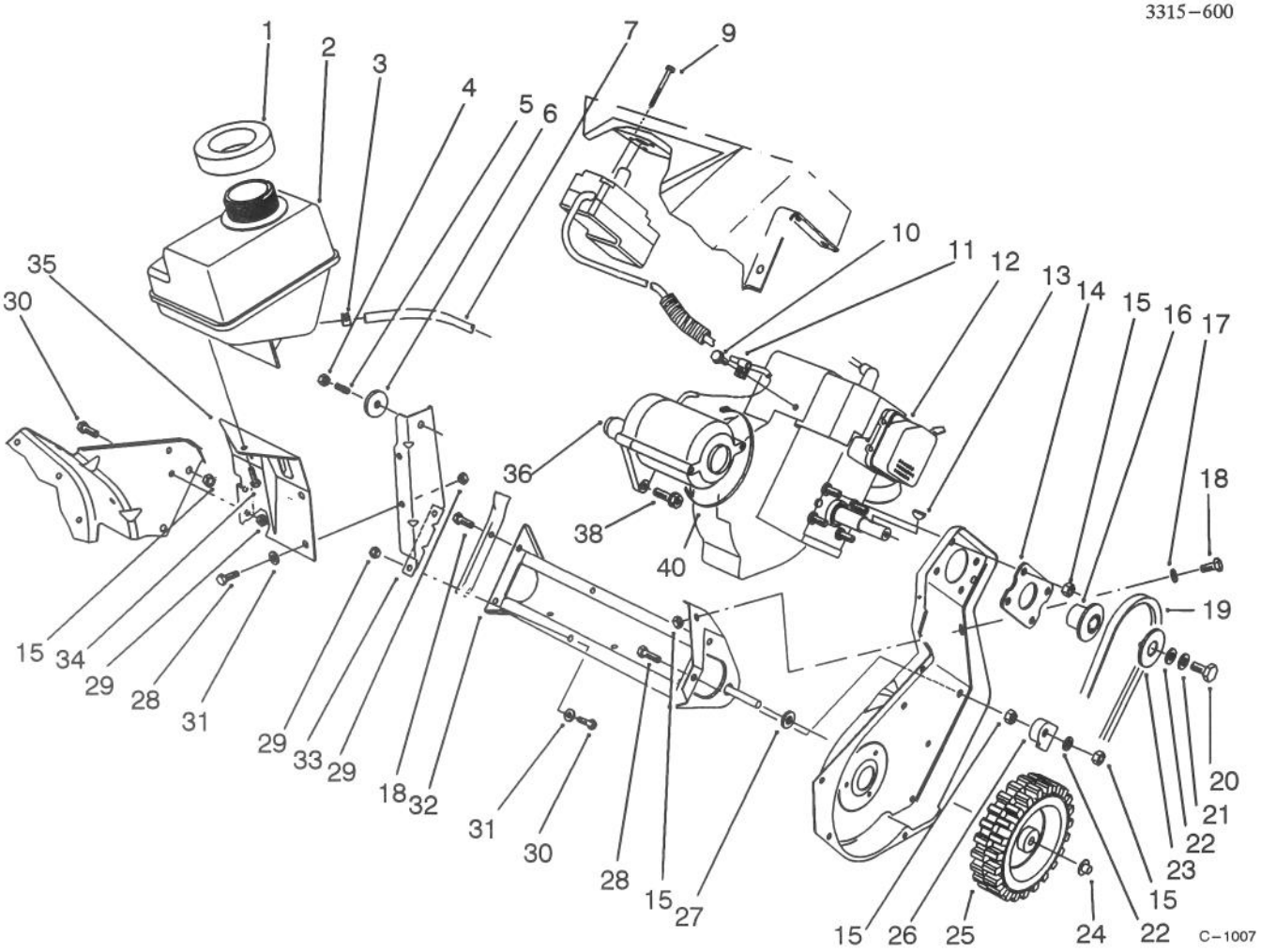

ENGINE & FRAME ASSEMBLY

Ref. No.	Part No.	Description	No. Used
1	55–9310	Seal – Fuel Tank	1
2	71–5020	Tank – Fuel	1
3	2412–86	Clamp – Hose	2
4	3296–16	Nut – Lock	1
5	38–8710	Stud	1
6	71–5320	Washer – Engine Support	1
7	49–2482	Hose – Fuel	1
9	32144–27	Screw – Thread Forming	3
10	32144–10	Screw – Thread Forming	1
11	2412–91	Clamp – Cable	1
†12		Engine Assy.	1
13	3257–3	Key – Woodruff	1
14	71–5290	Plate – Engine	1
15	3296–29	Nut – Lock	9
16	71–5050	Hub – Sheave	1
17	3256–23	Washer – Flat	1
18	322–3	Screw – Hex. Hd. Cap	3
19	71–5381	Belt – Drive	1
20	3235–6	Screw – Locking Hex. Hd.	1

Ref. No.	Part No.	Description	No. Used
21	3290–456	Washer –– Bellleville	
22	3256–71	Washer – Flat	2
23	71–5060	Cap – Sheave	1
24	3290–320	Nut – Push	2
25	23–3250	Wheel	2
26	84–5610	Guide – Cable	1
27	71–5440	Spacer – Wheel	2
28	321–5	Screw – Hex. Hd. Cap	1
29	3296–42	Nut – Lock	6
30	321–4	Screw – Hex. Hd. Cap	6
31	3256–22	Washer – Flat	4
32	71–5200	Frame Assembly	1
33	71–5210	Support – Engine	1
34	32144–53	Screw – Thread Forming	1
35	71–5220	Bracket – Fuel Tank	1
*36	77–0401	Starter Motor & Switch Housing Assembly	
38	80–0700	Screw – Hex Torx	2
40	250–7	Strap – Starter Tie Down	1

†Obtain from your local Tecumseh Dealer.
*See Page 6

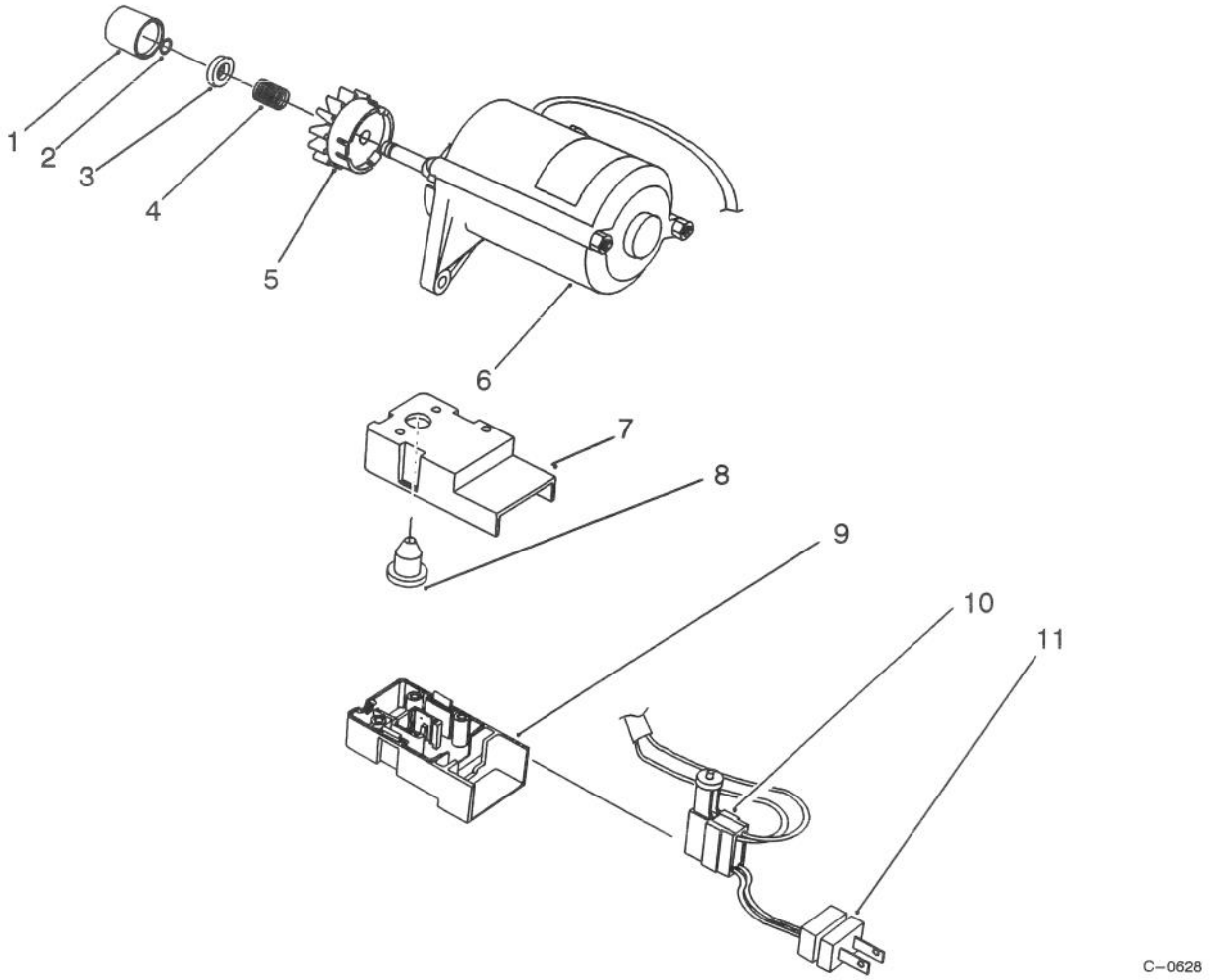

STARTER MOTOR ASSEMBLY

Ref. No.	Part No.	Description	No. Used
1	70–7890	Cap – Pinion	1
2	61–4680	Ring – Lock	1
3	61–4670	Stop – Pinion	1
4	61–4690	Spring – Anti – Drift	1
5	84–5240	Pinion Assembly	1
6	70–0402	Starter Motor Assembly	1

Ref. No.	Part No.	Description	No. Used
7	80–3740	Cap – Switch Housing	1
8	61–4810	Boot – Switch	1
9	80–3730	Base – Switch Housing	1
10	61–4820	Switch – Starter	1
11	36–8370	Plug – Power	1
*	28–9170	Cord – 7 Ft.	1

*Not Illustrated

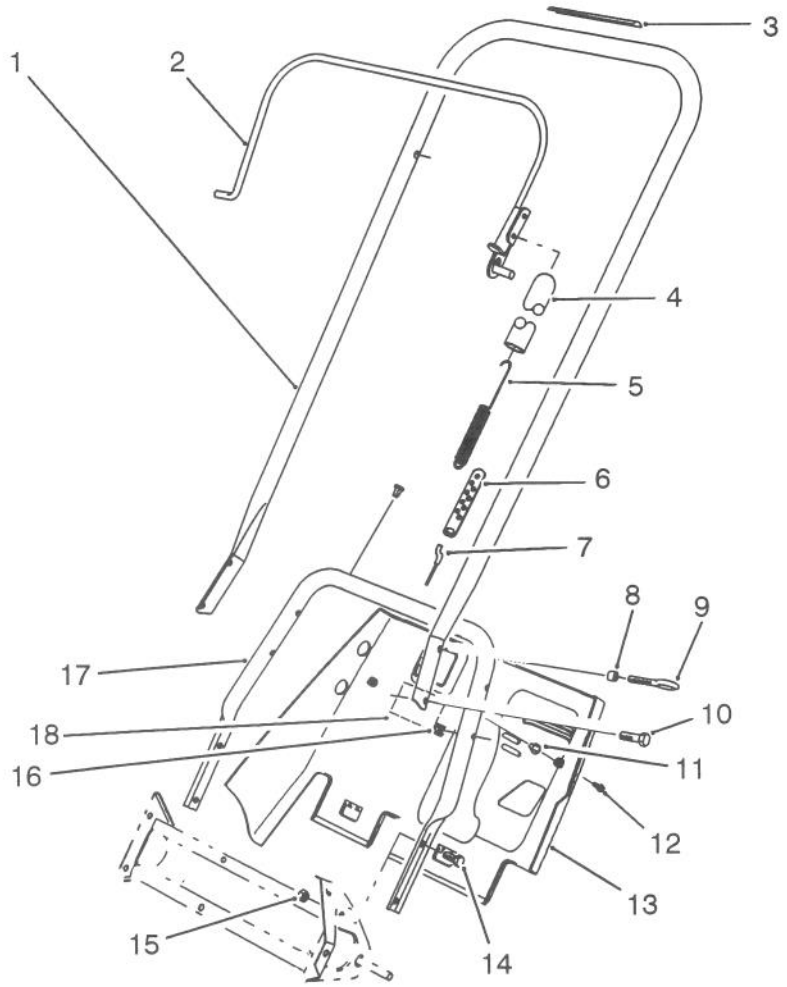

C–1009

HANDLE ASSEMBLY

Ref. No.	Part No.	Description	No. Used
1	71–5090	Handle – Upper	1
2	71–5120	Bail Assembly	1
3	66–6870	Decal – Rotor Drive (Model No. 38195)	1
*	60–9470	Decal – Rotor Drive (Model No. 38196	1
4	71–5530	Cover – Spring	1
5	71–5480	Spring – Extension	1
6	71–5330	Adjuster – Cable	1
7	55–9322	Cable – Clutch	1
8	55–9370	Spacer	1

Ref. No.	Part No.	Description	No. Used
9	3299–1	Bolt – Eye	1
10	32105–11	Screw – Hex. Hd. Cap	3
11	3290–486	Nut – Push	5
12	32144–53	Screw – Thread Forming	3
13	71–5040	Shroud – Lower	1
14	322–3	Screw – Hex. Hd. Cap	2
15	3296–29	Nut – Lock	2
16	3290–225	Nut – Speed	4
17	71–5370	Handle – Lower	1
18	84–5490	Decal – Warning (Model No. 38196)	1

*Not Illustrated

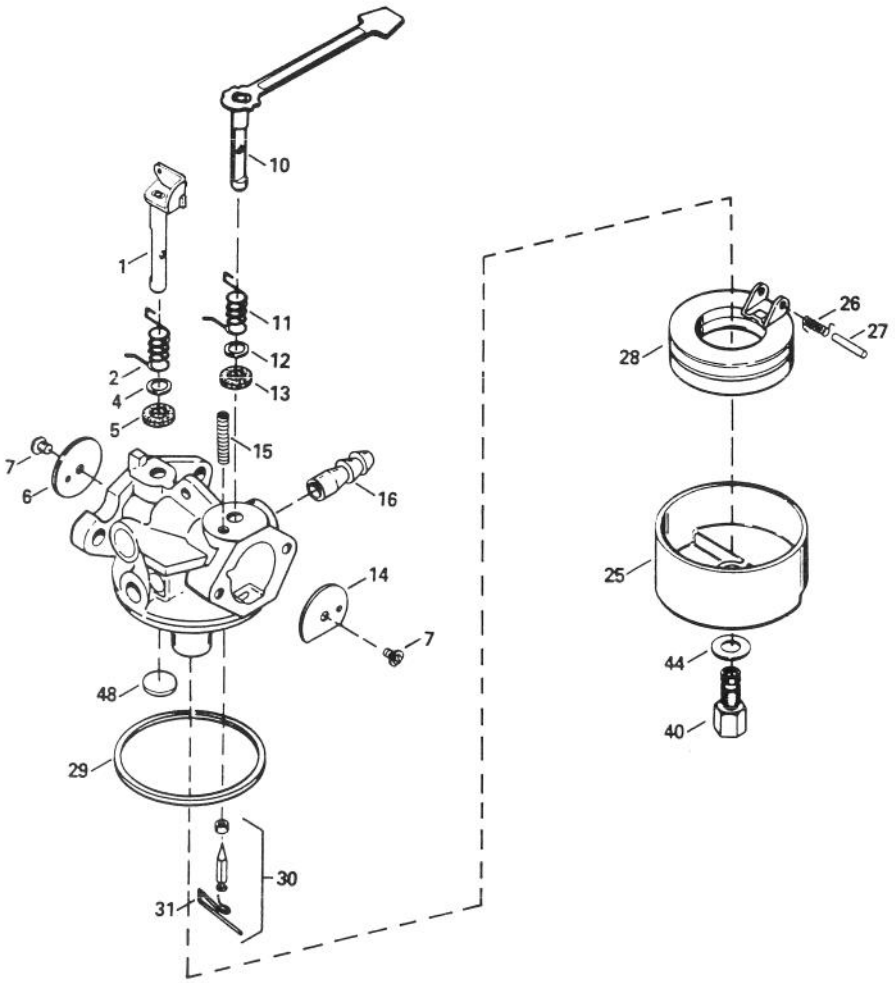

CARBURETOR NO. 632641

Ref. No.	Part No.	Description	No. Used
1	632166	Throttle Shaft & Lever Assy.	1
2	632169	Spring – Throttle Return	1
4	631184	Washer – Dust Seal	1
5	631183	Dust Seal	1
6	631621	Shutter – Throttle	1
7	650506	Screw – Shutter	2
10	632553	Choke Shaft & Lever Assy.	1
14	631815	Shutter – Choke	1
15	630735	Spring – Choke Positioning	1
16	632164	Fitting – Fuel Inlet	1
25	631700	Bowl – Float	1

Ref. No.	Part No.	Description	No. Used
26	632386	Spring – Float Dampening	1
27	631024	Shaft – Float	1
28	632019	Float – Carburetor	1
29	631028	Seal – O–Ring	1
30	631021	Inlet Needle, Seat & Clip (Incl. Ref. #31)	1
31	631022	Clip – Spring	1
40	632385	Nut – Float Bowl	1
44	631334	Washer – Bowl Nut	1
48	631027	Plug – Welch	1

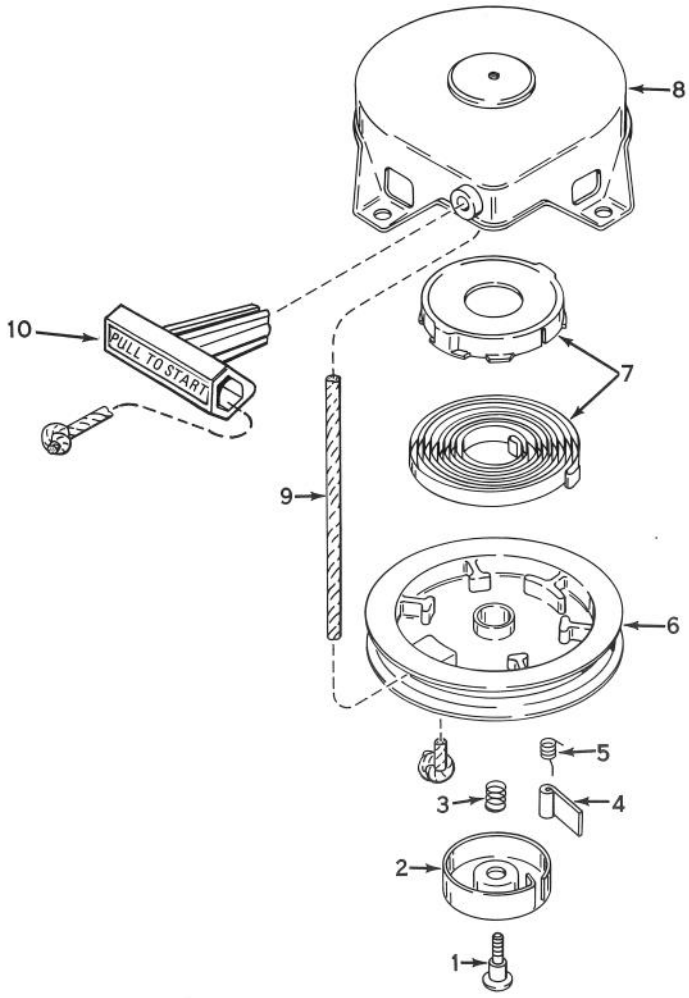

RECOIL STARTER NO. 590537

Ref. No.	Part No.	Description	No. Used
1	590409A	Screw – Retainer	1
2	590410	Retainer	1
3	590411	Spring – Brake	1
4	590148	Dog – Starter	1
5	590412	Spring – Dog	1

Ref. No.	Part No.	Description	No. Used
6	590413A	Pulley	1
7	590414	Spring & Keeper Assembly	1
8	590536	Starter Housing Assembly	1
9	590535	Rope – Starter	1
10	590452	Handle – Starter	1

ENGINE TECUMSEH MODEL NO. HSK600 TYPE 1667R (MODEL NO. 38195 ONLY)

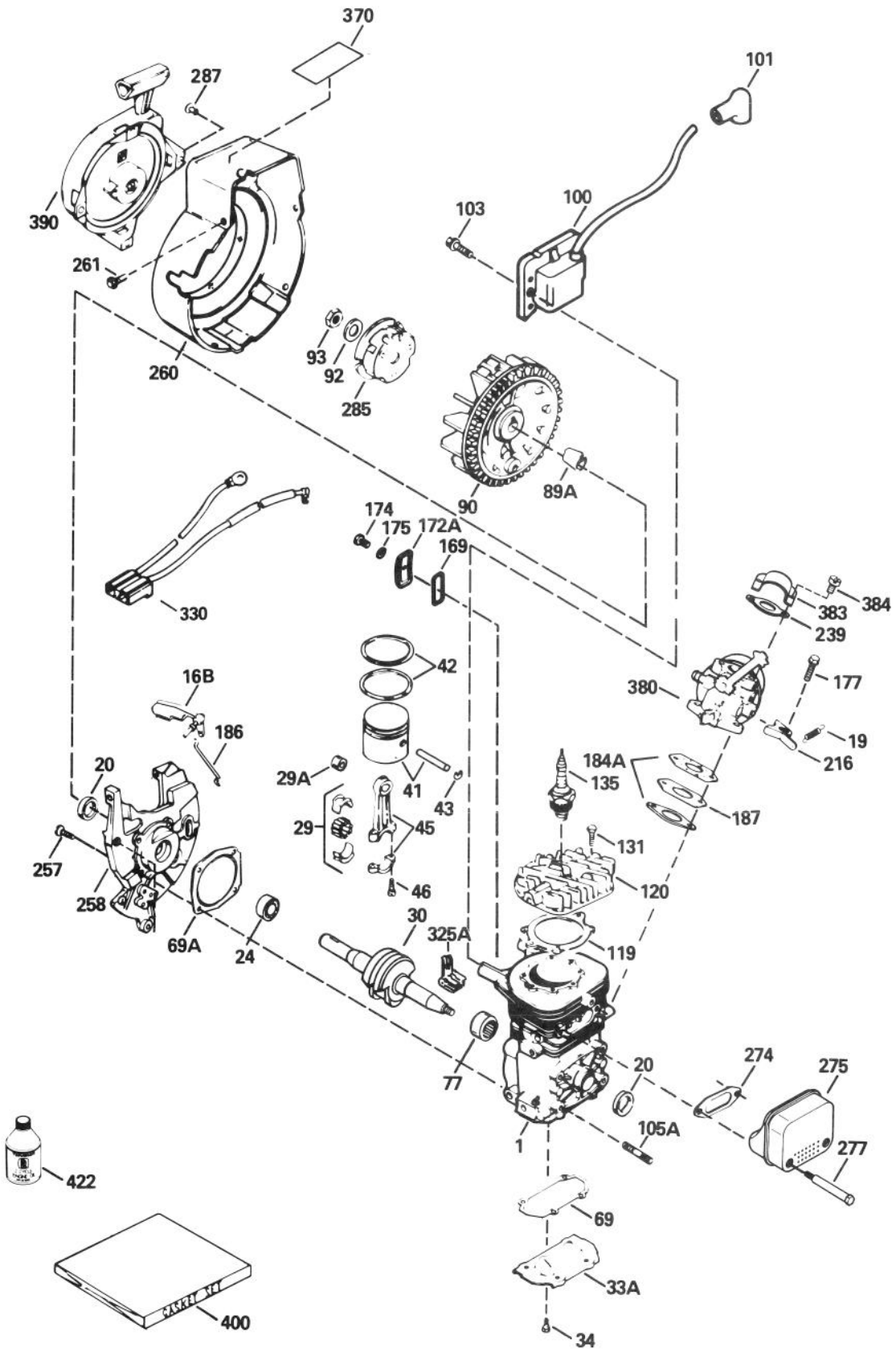

ENGINE TECUMSEH MODEL NO. HSK600 TYPE 1667R (MODEL NO. 38195 ONLY)

Ref. No.	Part No.	Description	No. Used
1		Block Ass'y – Cylinder (Order short block if replacement is required)	1
16B	490291A	Vane Ass'y – Air	1
19	570707	Spring – Governor	1
20	510319	Seal – Crankshaft	2
24	530110	Bearing – Ball	1
29	530150	Bearing & Liner Set – Needle (37 Needles)	1
29A	530104A	Bearing – Cartridge	1
30	290602	Crankshaft	1
33A	570644	Plate – Cover	1
34	650579	Screw – Pan Flex Hd.	4
41	310283A	Piston & Pin Ass'y	1
42	310190	Ring Set – Piston	1
43	310167	Ring – Piston Pin Retaining	2
45	310235B	Rod Ass'y – Connecting (Incl. Ref. #29, 29A, & 46)	1
46	650633	Screw – Connecting Rod	2
*69	510323A	Gasket – Cover Plate	1
*69A	510292A	Gasket – Housing Base	1
77	530105	Bearing – Needle	1
89A	611032	Sleeve – Flywheel	1
90	611066	Flywheel	1
92	650815	Washer – Belleville	1
93	650390	Nut – Flywheel	1
100	34443A	Solid State Ass'y	1
101	610118	Cover – Spark Plug	1
103	650814	Screw – Hex Hd. Sems	2
105A	650796	Stud – Cylinder	4
*119	510274A	Gasket – Cylinder Head	1
120	250240A	Head – Cylinder	1
131	650477	Screw – Pan Flex Hd.	5
135	611049	Plug – Spark (RCJ–8Y or equivalent)	1
*169	510325A	Gasket – Cover	1
172A	570647	Cover Ass'y – Compression Release	1
174	650579	Screw – Pan Flex Hd.	1
175	650838	Washer – Flat	1
177	650959	Screw	2
*184A	510326A	Gasket – Carburetor	2
186	490294	Link – Governor	1
187	570438A	Spacer	1
216	570645	Lever – Adjusting	1
239	35815	Gasket – Filter Base	1
257	650911	Screw – Torx Pan Hd.	4
258	350422	Base Ass'y – Blower Hsg (Incl. Ref. #20)	1
260	350423	Housing – Blower	1
261	650737	Screw – Hex Washer Hd. Taptite	4
*274	510346	Gasket – Muffler	1
275	390330	Muffler	1
277	650869	Screw – Hex Hd.	2
285	590551	Cup – Starter	1
†287		Rivet – Pop	4
325A	29443	Clip – Spring	1
330	611153	Harness – Wire	1
370	35977	Decal – Caution	1
380	632641	Carburetor (Incl. Ref. #184A)	1
383	570434	Baffle – Air	1
384	650229	Screw – Pan Hd. Sems	2
390	590537	Starter Ass'y – Rewind	1
400	510324B	Gasket Set	1
422	730227A	Oil – 2 Cycle (8 oz.)	1

* Indicates parts included in Gasket Set ref. #400.
† Obtain locally.

ENGINE TECUMSEH MODEL NO. HSK600 TYPE 1681R (MODEL NO. 38196 ONLY)

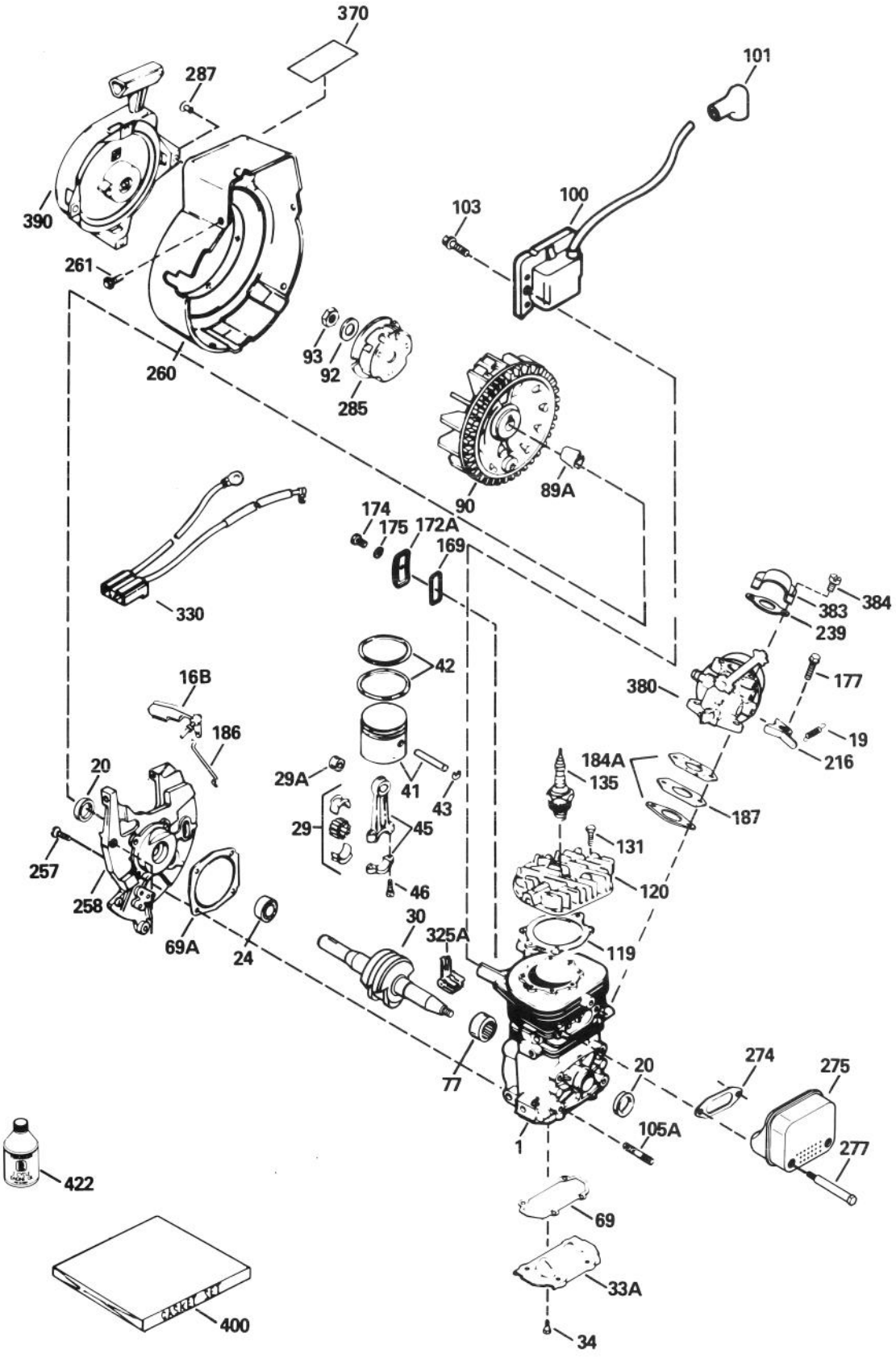

ENGINE TECUMSEH MODEL NO. HSK600 TYPE 1681R (MODEL NO. 38196 ONLY)

Ref. No.	Part No.	Description	No. Used
1		Block Ass'y – Cylinder (Order short block if replacement is required)	1
16B	490291A	Vane Ass'y – Air	1
19	570707	Spring – Governor	1
20	510319	Seal – Crankshaft	2
24	530110	Bearing – Ball	1
29	530150	Bearing & Liner Set – Needle (37 Needles)	1
29A	530104A	Bearing – Cartridge	1
30	290602	Crankshaft	1
33A	570644	Plate – Cover	1
34	650579	Screw – Pan Flex Hd.	4
41	310283A	Piston & Rod Ass'y	1
42	310190	Ring Set – Piston	2
43	310167	Ring – Piston Pin Retaining	2
45	310235B	Rod Ass'y – Connecting (Incl. Ref. #29, 29A, & 46)	1
46	650633	Screw – Connecting Rod	2
*69	510323A	Gasket – Cover Plate	1
*69A	510292A	Gasket – Housing Base	1
77	530105	Bearing – Needle	1
89A	611032	Sleeve – Flywheel	1
90	611066	Flywheel	1
92	650815	Washer – Belleville	1
93	650390	Nut – Flywheel	1
100	34443A	Solid State Ass'y	1
101	610118	Cover – Spark Plug	1
103	650814	Screw – Hex Hd. Sems	2
105A	650796	Stud – Cylinder	4
*119	510274A	Gasket – Cylinder Head	1
120	250240B	Head – Cylinder	1
131	650477	Screw – Pan Flex Hd.	5
135	611049	Plug – Spark (RCJ–8Y or equivalent)	1

Ref. No.	Part No.	Description	No. Used
*169	510325A	Gasket – Cover	1
172A	570647	Cover Ass'y – Compression Release	1
174	650579	Screw – Pan Flex Hd.	1
175	650838	Washer – Flat	1
177	650959	Screw	2
*184A	510326A	Gasket – Carburetor	2
186	490294	Link – Governor	1
187	570438A	Spacer	1
216	570645	Lever – Adjusting	1
239	35815	Gasket – Filter Base	1
257	650911	Screw – Torx Pan Hd.	4
258	350422	Base Ass'y – Blower Hsg (Incl. Ref. #20)	1
260	350423	Housing – Blower	1
261	650737	Screw – Hex Washer Hd. Taptite	4
*274	510346	Gasket – Muffler	1
275	390330	Muffler	1
277	650869	Screw – Torx Pan Hd.	2
285	590551	Cup – Starter	1
†287		Rivet – Pop	4
325A	29443	Clip – Spring	1
330	611153	Harness – Wire	1
370	35977	Decal – Caution	1
380	632641	Carburetor (Incl. Ref. #184A)	1
383	570434	Baffle – Air	1
384	650229	Screw – Pan Hd. Sems	2
390	590537	Starter – Rewind	1
400	510324B	Gasket Set	1
422	730227A	Oil – (2 Cycle) (8 Ounce)	1

* Indicates parts included in Gasket Set ref. #400.
† Obtain locally.

PRODUCT CHANGES

In an effort to make improvements available to TORO owners as quickly as possible, minor changes are incorporated into Toro's products from time to time that do not become immediately shown in the Parts Catalog. If such a change has been made in your unit, which is not reflected in your manual, see your TORO Distributor or his Authorized TORO Service Dealer for information and part numbers.

IDENTIFICATION AND ORDERING

MODEL AND SERIAL NUMBERS

The Snowthrower has two identification numbers; a model number and a serial number. The two numbers are stamped on a decal which is located on back of the frame assembly. In any correspondence concerning the snowthrower, supply model and serial numbers to assure that correct information and replacement parts are obtained.

To order replacement parts from an Authorized TORO Service Dealer, supply the following information:

1. Model and serial number of the snowthrower.
2. Part number, description, and the quantity of part(s) desired.

NOTE: Do not order by reference number if a parts catalog is being used; use the PART NUMBER.

COUNTRIES OTHER THAN THE UNITED STATES OR CANADA

Customers who have purchased TORO products exported from the United States or Canada should contact their Toro Distributor (Dealer) to obtain guarantee policies for your country, province or state. If for any reason you are dissatisfied with your Distributor's service or have difficulty obtaining guarantee information, contact the TORO importer. If all other remedies fail, you may contact us at The Toro Company.

MAINTENANCE RECORD

Date								

MAINTENANCE RECORD

Date								

MAINTENANCE RECORD

Date								