Form No. 3359-828 Rev A

TORO®

Count on it.

Operator's Manual

Titan® Z4800 Zero-Turn-Radius Riding Mower
Titan® Z5200 Zero-Turn-Radius Riding Mower

Model No. 74816—Serial No. 280000001 and Up

Model No. 74818—Serial No. 280000001 and Up



Register at www.Toro.com.

Original Instructions (EN)

Important: This engine is not equipped with a spark arrester muffler. It is a violation of California Public Resource Code Section 4442 to use or operate the engine on any forest-covered, brush-covered, or grass-covered land. Other states or federal areas may have similar laws.

This spark ignition system complies with Canadian ICES-002, ISO 14982, EN 55012.

The enclosed Engine Owner's Manual is supplied for information regarding the US Environmental Protection Agency (EPA) and the California Emission Control Regulation of emission systems, maintenance, and warranty. Replacements may be ordered through the engine manufacturer.

For models with stated engine horsepower, the gross horsepower of the engine was laboratory rated by the engine manufacturer in accordance with SAE J1940. As configured to meet safety, emission, and operating requirements, the actual engine horsepower on this class of lawn mower will be significantly lower.

Introduction

Read this information carefully to learn how to operate and maintain your product properly and to avoid injury and product damage. You are responsible for operating the product properly and safely.

You may contact Toro directly at www.Toro.com for product and accessory information, help finding a dealer, or to register your product.

Whenever you need service, genuine Toro parts, or additional information, contact an Authorized Service Dealer or Toro Customer Service and have the model and serial numbers of your product ready. identifies the location of the model and serial numbers on the product. Write the numbers in the space provided.

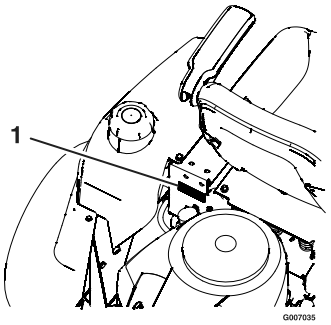

Figure 1
Behind the seat

1. Model and serial number location

Model No. _____

Serial No. _____

This manual identifies potential hazards and has safety messages identified by the safety alert symbol (Figure 2), which signals a hazard that may cause serious injury or death if you do not follow the recommended precautions.



Figure 2

1. Safety alert symbol

This manual uses 2 other words to highlight information. **Important** calls attention to special mechanical information and **Note** emphasizes general information worthy of special attention.

Contents

Introduction 2
Safety 3
- Safe Operating Practices 3
- Toro Riding Mower Safety 5
- Slope Chart 7
- Safety and Instructional Decals 8

Product Overview 12
- Controls 13
- Specifications 14
- Systems 14
- Dimensions 15
- Torque Requirements 15

Operation 16
- Think Safety First 16
- Recommended Gasoline 16
- Checking the Engine Oil Level 18
- Starting the Engine 18
- Operating the Blades 19
- Stopping the Engine 19
- The Safety Interlock System 20
- Driving Forward or Backward 20
- Stopping the Machine 21
- Tracking Adjustment 21
- Adjusting the Height of Cut 22
- Positioning the Seat 22
- Changing the Seat Ride Suspension 22
- Adjusting the Motion Control Levers 23
- Pushing the Machine by Hand 23

© 2008—The Toro® Company
8111 Lyndale Avenue South
Bloomington, MN 55420

Contact us at www.Toro.com.
Printed in the USA.
All Rights Reserved

Side Discharge 24
Transporting 24
Operating Tips 25
Maintenance 26
Recommended Maintenance Schedule(s) 26
Premaintenance Procedures 27
Raising the Seat 27
Accessing the Battery 27
Lubrication 27
Greasing the Bearings 27
Engine Maintenance 28
Servicing the Air Cleaner 28
Servicing the Engine Oil 29
Servicing the Spark Plug 31
Cleaning the Blower Housing 31
Fuel System Maintenance 32
Replacing the Fuel Filter 32
Electrical System Maintenance 33
Charging the Battery 33
Servicing the Fuses and Relay 35
Drive System Maintenance 35
Checking the Tire Pressure 35
Hydraulic System Maintenance 36
Checking the Hydraulic Oil Level 36
Change the Hydraulic System Filter 36
Mower Maintenance 37
Servicing the Cutting Blades 37
Leveling the Mower Deck 38
Adjusting the Blade Slope 39
Removing the Mower Deck 40
Mower Belt Maintenance 41
Installing the Mower Deck 41
Replacing the Discharge Deflector 42
Cleaning 43
Washing the Underside of the Mower 43
Storage 44
Cleaning and Storage 44
Troubleshooting 45
Schematics 47

Safety

This machine meets or exceeds the B71.1-2003 specifications of the American National Standards Institute, in effect at the time of production. However, improper use or maintenance by the operator or owner can result in injury. To reduce the potential for injury, comply with these safety instructions and always pay attention to the safety alert symbol, which means CAUTION, WARNING, or DANGER-"personal safety instruction." Failure to comply with the instruction may result in personal injury or death.

Safe Operating Practices

The following instructions are from ANSI standard B71.1-2003.

This product is capable of amputating hands and feet and throwing objects. Always follow all safety instructions to avoid serious injury or death.

General Operation

- Read, understand, and follow all instructions in the operator's manual and on the machine before starting.
- Do not place hands or feet near rotating parts or under the machine. Keep clear of the discharge opening at all times.
- Allow only responsible adults who are familiar with the instructions to operate the machine.
- Clear the area of objects such as rocks, toys, wire, etc., which could be picked up and thrown by the blade.
- Be sure the area is clear of other people before mowing. Stop the machine if anyone enters the area.
- Never carry passengers.
- Do not mow in reverse unless absolutely necessary. Always look down and behind before and while backing up.
- Be aware of the mower discharge direction and do not point it at anyone. Avoid discharging material against a wall or obstruction. Material may ricochet back toward the operator. Stop the blade(s) when crossing gravel surfaces.
- Do not operate the machine without deflector, discharge cover or entire grass collection system in place and working.
- Be alert, slow down and use caution when making turns. Look behind and to the side before changing directions.

- Never leave a running machine unattended. Always turn off blades, set parking brake, stop engine, and remove key before dismounting.
- Turn off blades when not mowing. Stop the engine and wait for all parts to come to a complete stop before cleaning the machine, removing the grass catcher or unclogging the discharge chute.
- Operate the machine only in daylight or good artificial light.
- Do not operate the machine while under the influence of alcohol or drugs.
- Watch for traffic when operating near or crossing roadways.
- Use extra care when loading or unloading the machine into a trailer or truck.
- Always wear eye protection when operating the mower.
- Data indicates that operators, age 60 years and above, are involved in a large percentage of riding mower-related injuries. These operators should evaluate their ability to operate the riding mower safely enough to protect themselves and others from serious injury.
- Always follow the recommendations for wheel weights or counterweights.

Slope Operation

Slopes are a major factor related to loss of control and tip-over accidents, which can result in severe injury or death. Operation on all slopes requires extra caution. If you cannot back up the slope or if you feel uneasy on it, do not mow it.

- Do not mow slopes greater than 15 degrees.
- Watch for ditches, holes, rocks, dips, and rises that change the operating angle, as rough terrain could overturn the machine.
- Choose a low ground speed so you will not have to stop while operating on a slope.
- Do not mow slopes when grass is wet. Slippery conditions reduce traction and could cause sliding and loss of control.
- Always keep the wheel motors engaged when going down slopes.
- Reduce speed and use extreme caution on slopes.
- Do not make sudden turns or rapid speed changes.
- Remove or mark obstacles such as rocks, tree limbs, etc. from the mowing area. Tall grass can hide obstacles.
- Avoid sudden starts when mowing uphill because the mower may tip backwards.
- Be aware that loss of traction may occur going downhill. Weight transfer to the front wheels may cause drive wheels to slip and cause loss of braking and steering.
- Always avoid sudden starting or stopping on a slope. If tires lose traction, disengage the blades and proceed slowly off the slope.
- Use extreme care with grass catchers or other attachments. These can change the stability of the machine and cause loss of control.
- Do not try to stabilize the machine by putting your foot on the ground.
- Do not mow near drop-offs, ditches, steep banks or water. Wheels dropping over edges can cause rollovers, which may result in serious injury, death or drowning.
- Use a walk behind mower and/or a hand trimmer near drop-offs, ditches, steep banks or water.

Children

Tragic accidents can occur if the operator is not alert to the presence of children. Children are often attracted to the machine and the mowing activity. Never assume that children will remain where you last saw them.

- Keep children out of the mowing area and under the watchful care of another responsible adult, not the operator.
- Be alert and turn the machine off if children enter the area.
- Before and while backing or changing direction, look behind, down, and side-to-side for small children.
- Never carry children, even with the blades off. They may fall off and be seriously injured or interfere with safe machine operation.
- Children who have been given rides in the past may suddenly appear in the mowing area for another ride and be run over or backed over by the mower.
- Never allow children to operate the machine.
- Use extra care when approaching blind corners, shrubs, trees, the end of a fence or other objects that may obscure vision.

Towing

A hitch kit is available for this machine and can be obtained by contacting an Authorized Toro Dealer. Do not tow without first installing this manufacturer

approved hitch. The following guidelines apply when towing with the approved hitch kit installed.

- Tow only with a machine that has a hitch designed for towing. Do not attach towed equipment except at the hitch point.
- Follow the manufacturer's recommendation for weight limits for towed equipment and towing on slopes.
- Never allow children or others in or on towed equipment.
- On slopes, the weight of the towed equipment may cause loss of traction and loss of control.
- Travel slowly and allow extra distance to stop.

Service

Safe Handling of Gasoline:

To avoid personal injury or property damage, use extra care when handling gasoline and other fuels. They are flammable and the vapors are explosive.

- Extinguish all cigarettes, cigars, pipes and other sources of ignition.
- Use only an approved container.
- Never remove the gas cap or add fuel when the engine is running. Allow the engine to cool before refueling.
- Never refuel the machine indoors.
- Never store the machine or fuel container inside where there is an open flame, such as near a water heater or furnace.
- Never fill containers inside a vehicle or on a truck or trailer with a plastic liner. Always place containers on the ground away from your vehicle before filling.
- Remove gas-powered equipment from the truck or trailer and refuel it on the ground. If this is not possible, then refuel such equipment with a portable container, rather than from a gasoline dispenser nozzle.
- Keep the nozzle in contact with the rim of the fuel tank or container opening at all times until the fueling is complete. Do not use a nozzle lock-open device.
- If fuel is spilled on clothing, change clothing immediately.
- Never overfill the fuel tank. Replace gas cap and tighten securely.

General Service:

- Never operate a machine inside a closed area. Engine exhaust contains carbon monoxide, which is an odorless, deadly poison that can kill you.
- Keep nuts and bolts tight, especially the blade attachment bolts. Keep equipment in good condition.
- Never tamper with safety devices. Check their proper operation regularly.
- Keep the machine free of grass, leaves, or other debris build-up. Clean up oil or fuel spillage fuel soaked debris. Allow the machine to cool before storing.
- Stop and inspect the equipment if you strike an object. Repair, if necessary, before restarting.
- Never make any adjustments or repairs with the engine running.
- Grass catcher components are subject to wear, damage and deterioration, which could expose moving parts or allow objects to be thrown. Frequently check components and replace with manufacturers' recommended parts, when necessary.
- Mower blades are sharp and can cut. Wrap the blade(s) or wear gloves, and use extra caution when servicing them.
- Check for proper brake operation frequently. Adjust and service as required.
- Maintain or replace safety and instruction decals as necessary.
- Use only genuine Toro replacement parts to ensure that original standards are maintained.

Toro Riding Mower Safety

The following list contains safety information specific to Toro products or other safety information that you must know that is not included in the ANSI standards.

- Stop the engine, disconnect spark plug wire(s) and remove key before performing any service, repairs, maintenance or adjustments.
- Keep hands, feet, hair, and loose clothing away from attachment discharge area, underside of mower and any moving parts while engine is running.
- Do not touch equipment or attachment parts which may be hot from operation. Allow to cool before attempting to maintain, adjust or service.
- Battery acid is poisonous and can cause burns. Avoid contact with skin, eyes, and clothing. Protect your face, eyes, and clothing when working with a battery.
- Battery gases can explode. Keep cigarettes, sparks and flames away from battery.

- Use only Toro approved attachments. Warranty may be voided if used with unapproved attachments.
- If loading the machine onto a trailer or truck, use a single, full-width ramp only. The ramp angle should not exceed 15 degrees.

  Note: Determine the left and right sides of the machine from the normal operating position.

Slope Chart

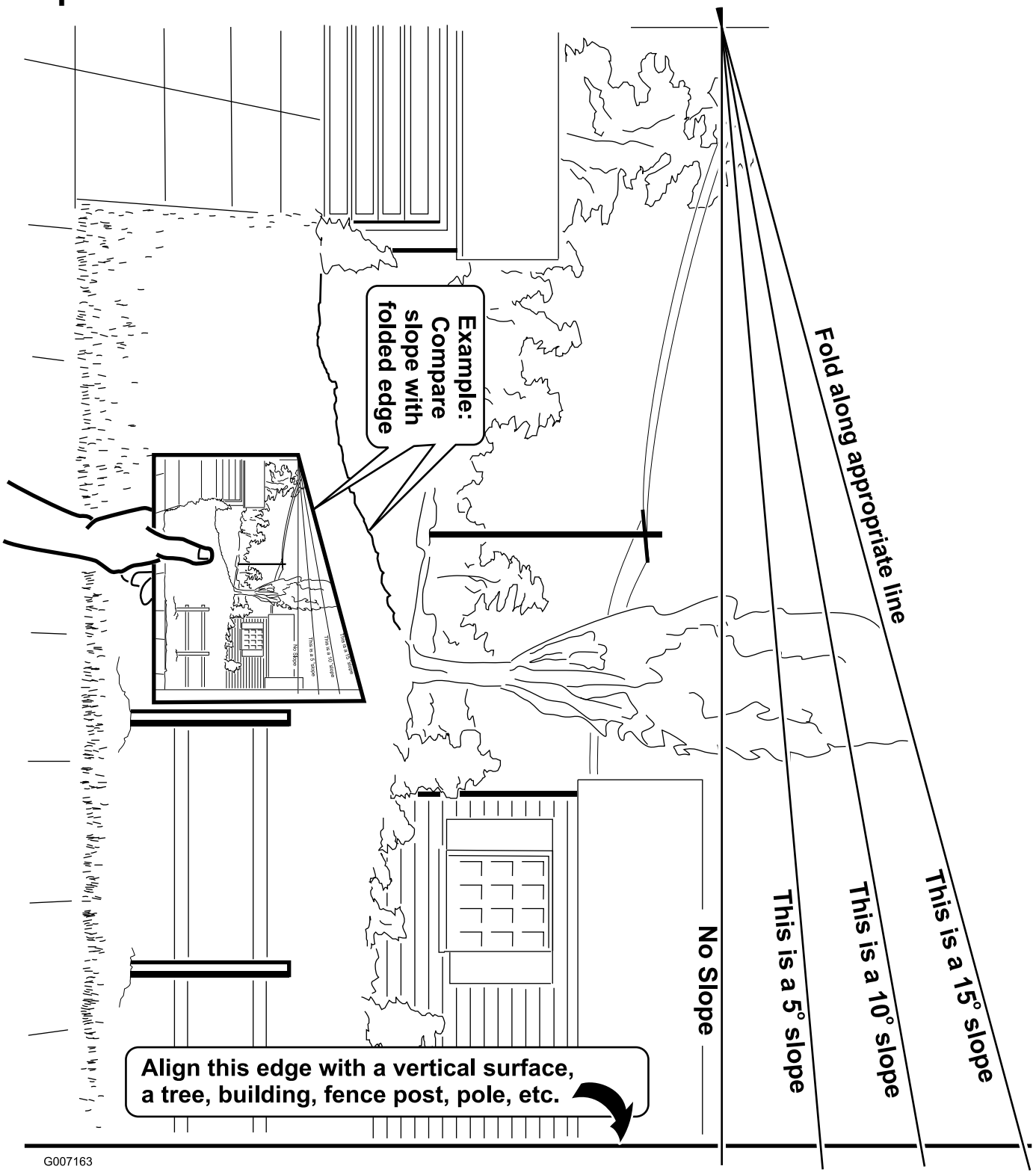
Example: Compare slope with folded edge
Fold along appropriate line
This is a 15° slope
This is a 10° slope
This is a 5° slope
No Slope
Align this edge with a vertical surface, a tree, building, fence post, pole, etc.
G007163

Safety and Instructional Decals

Safety decals and instructions are easily visible to the operator and are located near any area of potential danger. Replace any decal that is damaged or lost.

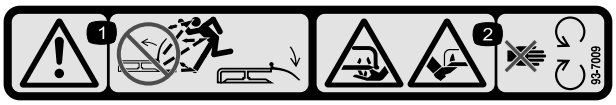

93-7009

1. Warning–Do Not operate the mower with the discharge deflector up or removed; keep the discharge deflector in place.
2. Cutting/dismemberment hazard of hand or foot, mower blade–stay away from moving parts.

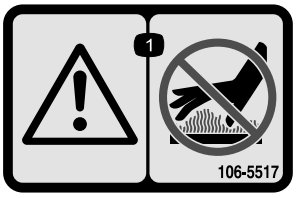

106-5517

1. Warning–Do Not touch the hot surface.

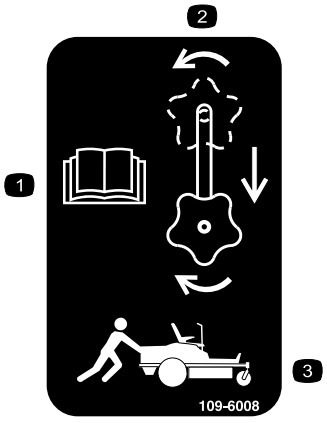

109-6008

1. Read the Operator's Manual.
2. Rotate the drive release knob to loosen, slide the knob, and tighten.
3. Push the machine.

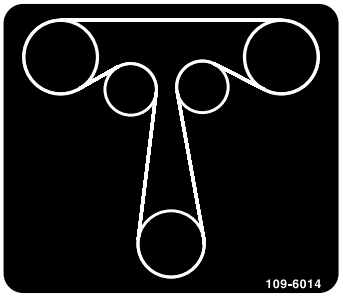

109-6014

Traction Drive Belt Routing

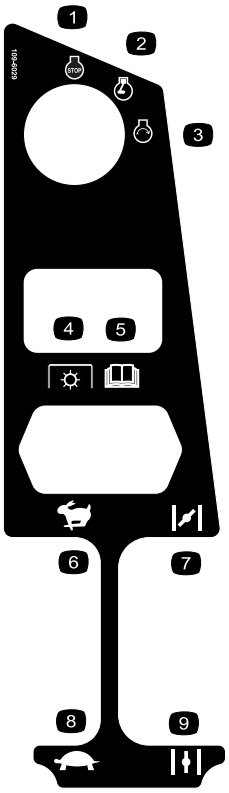

109-6029

1. Engine–stop
2. Engine–run
3. Engine–start
4. Power take-off (PTO), Blade control switch
5. Read the Operator's Manual.
6. Throttle–fast
7. Choke–on
8. Throttle–slow
9. Choke–off

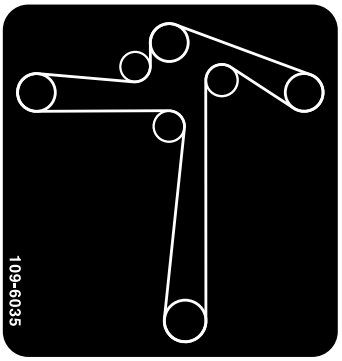

109-6035

Deck Drive Belt Routing

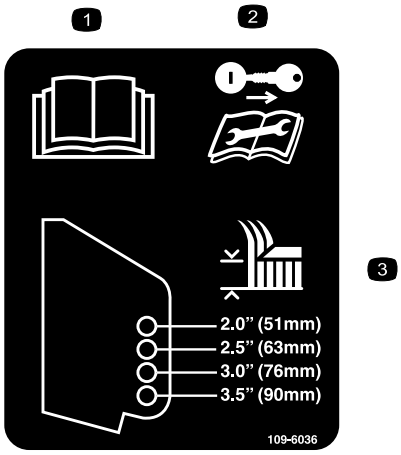

109-6036

1. Read the Operator's Manual.
2. Remove the ignition key and read the instructions before servicing or performing maintenance.
3. Height of cut.



109-6210

1. Read the Operator's Manual.
2. Cutting/dismemberment hazard, fan and entanglement hazard, belt–stay away from moving parts.

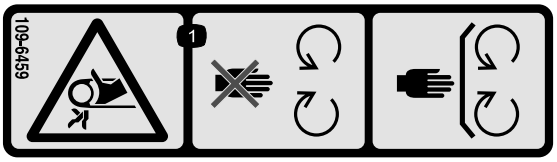

109-6459

1. Entanglement hazard, belt—Do Not open or remove safety shields while engine is running, keep shields in place.

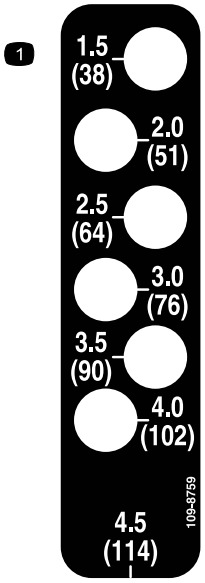

109-8759

1. Height of cut

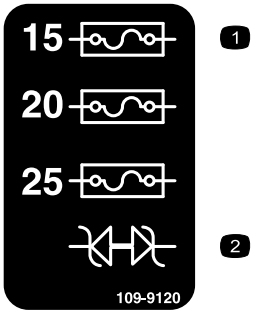

109-9120

1. Fuse
2. Diode

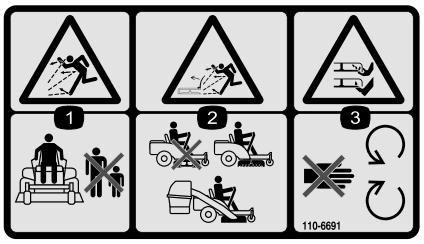

110-6691

1. Thrown objects hazard–keep bystanders a safe distance from the machine.
2. Thrown objects hazard, mower–keep the discharge deflector or collection system in place.
3. Cutting/dismemberment of hand or foot–stay away from moving parts.

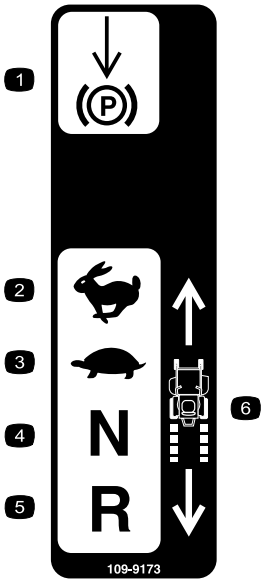

109-9173

1. Parking brake
2. Fast
3. Slow
4. Neutral
5. Reverse
6. Machine Speed

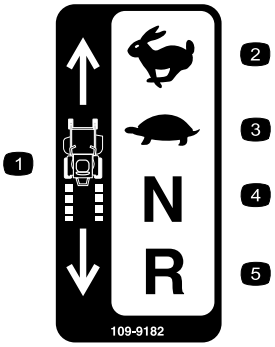

109-9182

1. Machine speed
2. Fast
3. Slow
4. Neutral
5. Reverse

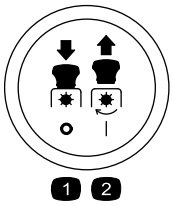

PTO Symbols

1. PTO—Off
2. PTO—On



Battery Symbols

Some or all of these symbols are on your battery.

1. Explosion hazard
2. No fire, open flames, or smoking
3. Caustic liquid/chemical burn hazard
4. Wear eye protection
5. Read the Operator's Manual.
6. Keep bystanders a safe distance from the battery.
7. Wear eye protection; explosive gases can cause blindness and other injuries.
8. Battery acid can cause blindness or severe burns.
9. Flush eyes immediately with water and get medical help fast.
10. Contains lead; do not discard.

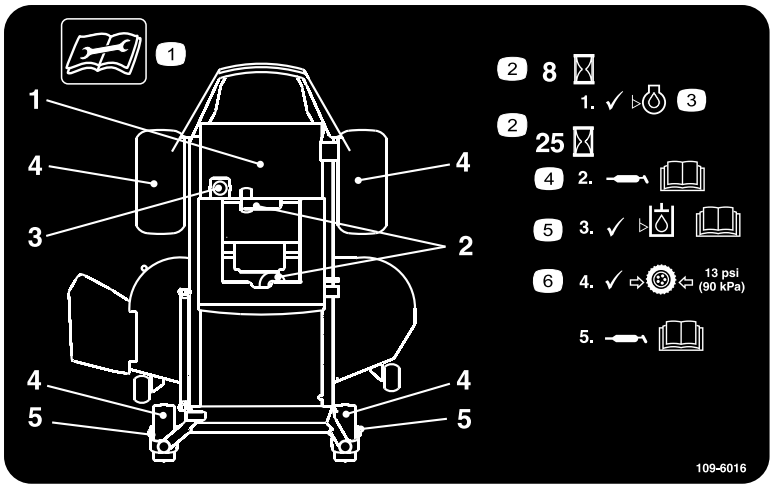

109-6016

1. Read the instructions before servicing or performing maintenance.
2. Time interval
3. Check oil level.
4. Refer to the Operator's manual for grease instructions.
5. Check hydraulic oil level and refer to the Operator's Manual for further instructions.
6. Check tire pressure.

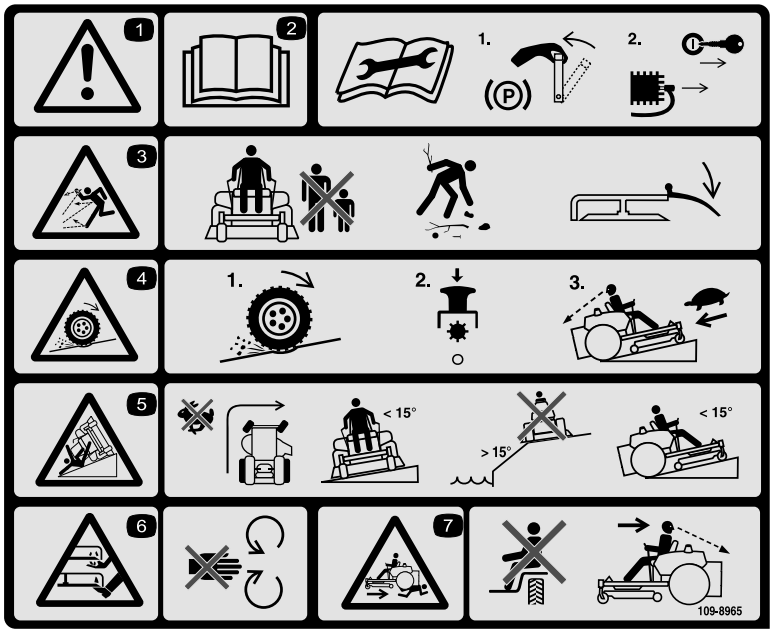

109-8965

1. Warning–read the Operator's Manual.
2. Read the instructions before servicing or performing maintenance; apply parking brake, remove the ignition key and disconnect the spark plug wire.
3. Thrown object hazard—keep bystanders a safe distance from the machine, pick up debris before operating, keep the discharge deflector in place.
4. Loss of traction/control hazard, slopes–loss of traction/control on slope, disengage the blade control switch (PTO), proceed off the slope slowly.
5. Tipping hazard–avoid sudden and sharp turns while on slopes, only mow across slopes less than 15 degrees, keep a safe distance from water, and only mow up and down slopes less than 15 degrees.
6. Cutting/dismemberment hazard of hand or foot, mower blade–stay away from moving parts.
7. Crushing/dismemberment hazard of bystanders, reversing–Do Not carry passengers, look behind and down when reversing.

Product Overview

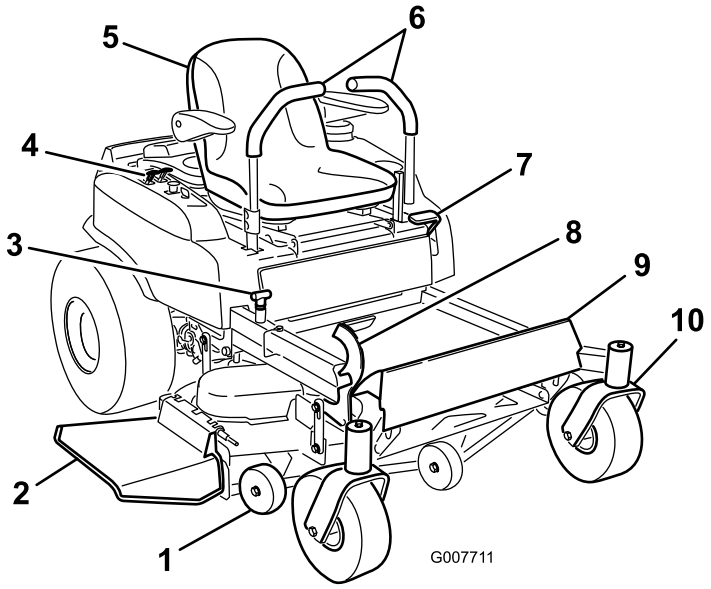

Figure 3

1. Anti-scalp roller
2. Discharge deflector
3. Height of cut adjustment
4. Control panel
5. Operator's seat
6. Motion control levers
7. Park brake
8. Height of cut foot lever
9. Footrest
10. Front caster wheel

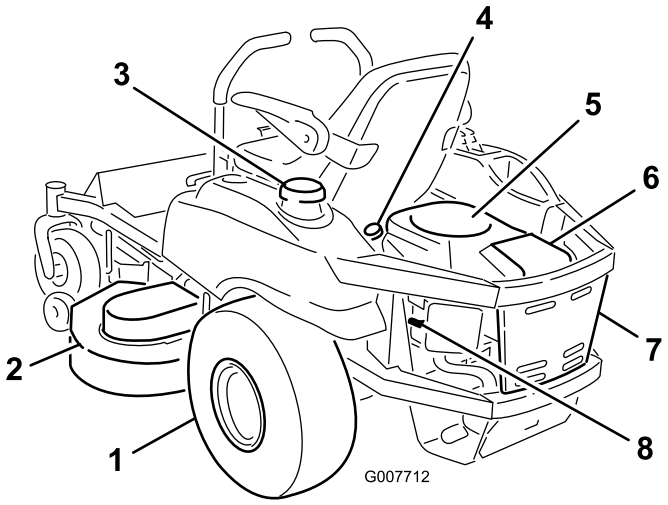

Figure 4

1. Rear drive wheel
2. Mower deck
3. Gas tank
4. Engine oil dipstick
5. Engine
6. Air filter
7. Engine guard
8. Spark plug wire (1 of 2)

Controls

Control Panel

Note: Become familiar with all of the controls before you start the engine and operate the machine.

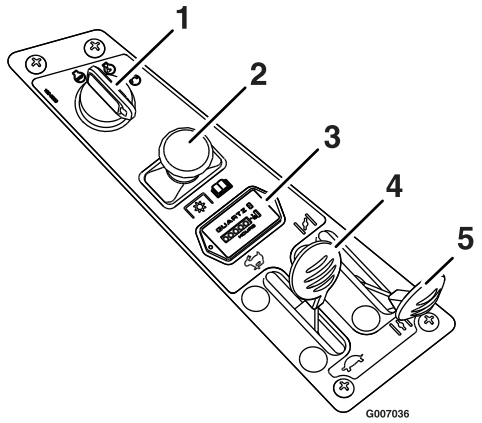

Figure 5

1. Ignition switch
2. Blade control switch (power take-off)
3. Hour meter
4. Throttle
5. Choke

Ignition Switch

The ignition switch is used to start and stop the engine. The switch has three positions "OFF", "RUN" and "START" (Figure 5). Insert key into switch and rotate clockwise to the "ON" position. Rotate clockwise to the next position to engage the starter (key must be held against spring pressure in this position).

Note: Brake must be engaged, motion control levers out (neutral lock position) and PTO switch "OFF" to start engine. (It is not necessary for the operator to be in the seat to start the engine.)

Turning the key to the Off position will stop the engine; however, always remove the key when leaving the machine to prevent someone from accidentally starting the engine

Blade Control Switch (Power Take-Off)

The blade control switch, represented by a power take-off (PTO) symbol (Figure 6), engages and disengages power to the mower blades. Pull out on the blade control switch to "On" to engage the blades

Push the blade control switch to "Off" to disengage the blades

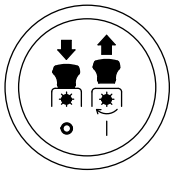

Figure 6

Choke Control

The choke is used to aid in starting a cold engine. Do Not run a warm engine with the choke in the "ON" position. Moving the choke lever forward will put the choke in the "ON" position and moving the choke lever to the rear will put the choke in the "OFF" position (Figure 5).

Throttle Control

The throttle is used to control engine speed. Moving throttle lever forward will increase engine speed and moving throttle lever to the rear will decrease engine speed. Moving the throttle forward into the detent is full throttle (Figure 5).

Motion Control Levers

The motion control levers located on each side of the seat (Figure 3).

The motion control levers are speed sensitive controls of independent wheel motors. Moving a lever forward or backward turns the wheel on the same side forward or in reverse; wheel speed is proportional to the amount the lever is moved. Moving the control levers outward from the center position locks them in the neutral position. Always position the motion control levers into the neutral position and engage the park brake lever when you stop the machine or leave it unattended. The unit must be tied down and brake engaged when transporting.

Parking Brake Lever

Located on left side of the console (Figure 3).

The brake lever engages a parking brake on the drive wheels.

Pull the lever up and rearward to engage the brake.

Push the lever forward and down to disengage the brake.

Height-of-Cut Foot Lever

The height of cut lever allows the operator to lower and raise the deck from the seated position (Figure 3). When the lever is moved forward, away from the operator

the deck is raised from the ground and when moved back, towards the operator it is lowered toward the ground. Only adjust the height of cut while machine is not moving.

Hour Meter

Located on the control panel.

The hour meter is connected to a pressure switch installed in the engine block and it records the number of hours that the engine has run (Figure 5). If the ignition switch is left on without engine running, hour meter will not run.

Note: This switch is not a low oil sensor and will not alert the operator if the engine oil is low.

Specifications

Systems

Engine

- Engine Specifications: See your Engine Owner's Manual
- RPM: Full Speed: 3600 ±75 (max) RPM (No Load) Idle: 1750 (min) RPM

Fuel System

- Capacity: 4.0 gal. (15.1 L)
- Type of Fuel: Regular unleaded gasoline, 87 octane or higher.
- Fuel Filter: Kohler P/N 24 050 10
- Fuel Shut-Off Valve: 1/4 turn increments ("ON", "OFF")

Electrical System

- Charging System: Flywheel Alternator
- Charging Capacity: 15 amps
- Battery Type: BCI Group U1
- Battery Voltage: 12 Volt
- Polarity: Negative Ground
- Fuses: One 25 amp, one 20 amp; one 15 amp blade type
- Diode: TVS

Safety Interlock System

- PTO must be disengaged, brake engaged, and motion control levers out (neutral lock) to start engine. (It is not necessary for the operator to be in the seat to start the engine.)
- Operator must be in seat when PTO is engaged, brake is disengaged, or motion control levers are moved in or engine will stop.
- Engine will stop if either the left, the right, or both levers are moved from neutral lock position while brake is engaged.

Operator Controls

- Steering and Motion Control:

  Note: Motion control levers are adjustable to two heights.

  – Separate levers, on each side of the console, control speed and direction of travel of the respective drive wheels.

  – Steering is controlled by varying the position of the levers relative to each other.

  – Moving motion control levers outward (in slots) locks the drive system in neutral.
- PTO Engagement Switch: Engages electric clutch (to drive belt) which engages mower blades.
- Parking Brake Lever: Engages parking brake.
- Deck Height Adjustment Pin: Sets cutting height to desired position.
- Deck Lift Assist Lever: Foot pedal that assists in raising the deck.

Seat

- Type: Standard seat with high back, foam padded with spring suspension and armrests.
- Mounting: Hinged to tilt up for access to hydraulic pumps, battery and other components. Held in tilted position with lanyard. Adjustable fore and aft seat track.
- Armrests: Standard–foam padded flip-up adjustable height armrests.
- Seat Safety Switch: Incorporated into the Safety Interlock System.

Hydrostatic Ground Drive System

- Hydrostatic Pumps: Two Hydro Gear ZT2800 Integrated drive systems.
- Hydraulic Oil Type: Use Mobil 1 15W-50 Synthetic motor oil.
- Speeds:
  – 0-7.0 mph (11.3 km/hr) forward.
  – 0-5.0 mph (8.0 km/hr) reverse.
- Drive wheel releases, located on left and right sides of engine deck, allow machine to be moved when the engine is not running and brake is off.

Tires & Wheels

	Drive		Front Caster
	Pneumatic (Air-Filled)		Pneumatic (Air-Filled)
Deck Size	48	52	All Decks
Quantity	2	2	2
Tread Size	Turf Tec	Turf Tec	All Decks
Size	20 x 8.00-8	20 x 10.00-8	10 x 4
Ply Rating	4	4	
Pressure	13 psi (90 kPa)	13 psi (90 kPa)	13 psi (90 kPa)

Cutting Deck

- Cutting Width:
  - 48 inch Deck: 48 inches (122 cm)
  - 52 inch Deck: 52 inches (132 cm)
- Discharge: Side
- Blade Size: (3 ea.)
  - 48 inch Deck: 16.25 inches (41.3 cm)
  - 52 inch Deck: 18.00 inches (45.7 cm)
- Blade Spindles: Solid steel spindles with no maintenance bearings.
- Deck Drive: Electric clutch mounted on vertical engine shaft. Blades are driven by one belt (w/self-tensioning idler) direct from the engine.
- Deck: Full floating deck is attached to out-front support frame. Maximum turf protection is provided with three anti-scalp rollers (both deck sizes).

  Deck design allows for bagging, mulching or side discharge.
- Deck Depth:
  - 46 inch Deck: 5.0 inches (12.7 cm)
  - 52 inch Deck: 5.0 inches (12.7 cm)
- Cutting Height Adjustment: A foot deck lift lever is used to adjust the cutting height from 1 1/2 inch (3.8 cm) to 4 1/2 inches (11.4 cm) in 1/2 inch (1.3 cm) increments.
- Mulching Kit: Optional.

Dimensions

Overall Width:

	48 inch Deck	52 inch Deck
Without Deck	45.5 inches (116 cm)	47.0 inches (119 cm)
Deflector Up	48.3 inches (122 cm)	53.0 inches (135 cm)
Deflector Down	59.4 inches (151 cm)	64.2 inches (163 cm)

Overall Length:

48 inch Deck	52 inch Deck
73.4 inches (186 cm)	73.4 inches (186 cm)

Overall Height:

48 inch Deck	52 inch Deck
41.8 inches (106 cm)	41.8 inches (106 cm)

Tread Width: (Center to Center of Tires, Widthwise)

	48 inch Deck	52 inch Deck
Drive Wheels	36.0 inches (91 cm)	36.8 inches (93 cm)
Caster Wheels	33.5 inches (85 cm)	33.5 inches (85 cm)

Wheel Base: (Center of Caster Tire to Center of Drive Tire)

48 inch Deck	52 inch Deck
48.9 inches (124 cm)	48.9 inches (124 cm)

Curb Weight:

48 inch Deck	52 inch Deck
645 lb (293 kg)	660 lb (299 kg)

Torque Requirements

Bolt Location	Torque
Spindle Pulley Nut	95-100 ft-lb (1291-142 N-m)
Blade Mounting Bolt	45-55 ft-lb (61-75 N-m)
Engine Mounting Bolts	27-33 ft-lb (37-45 N-m)
Anti-Scalp Roller Nyloc Nut	27-33 ft-lb (37-45 N-m)
Wheel Lug Nuts	70-90 ft-lb (95-122 N-m)
Clutch Mounting Bolt (secured with threadlocker)	50-55 ft-lb (68-75 N-m)
Spark Plug	15 ft-lb (20 N-m)

Operation

Note: Determine the left and right sides of the machine from the normal operating position.

Think Safety First

Please carefully read all of the safety instructions and decals in the safety section. Knowing this information could help you, your family, pets or bystanders avoid injury.

Mowing on wet grass or steep slopes can cause sliding and loss of control.

Wheels dropping over edges can cause rollovers, which may result in serious injury, death or drowning.

A loss of traction is a loss of steering control.

To avoid loss of control and possibility of rollover:

- **Do not mow near drop-offs or near water.**
- **Do not mow slopes greater than 15 degrees.**
- **Reduce speed and use extreme caution on slopes.**
- **When mowing slopes, gradually work from lower to higher areas on the incline.**
- **Avoid sudden turns or rapid speed changes.**
- **Turn up, into an incline when changing directions on slopes. Turning down the slope reduces traction.**
- **Attachments change the handling characteristics of the machine. Use extra caution when using attachments with the machine.**

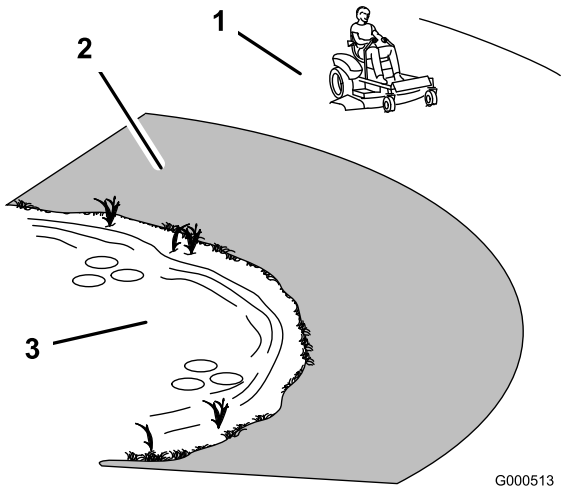

Figure 7

1. Safe Zone-use the machine here
2. Use walk behind mower and/or hand trimmer near drop-offs and water.
3. Water

Recommended Gasoline

Use UNLEADED Regular Gasoline suitable for automotive use (87 pump octane minimum).

Important: Never use methanol, gasoline containing methanol, or gasohol containing more than 10% ethanol because the fuel system could be damaged. Do Not mix oil with gasoline.

In certain conditions gasoline is extremely flammable and vapors are explosive.

A fire or explosion from gasoline can burn you, others, and cause property damage.

- **Fill the fuel tank outdoors in an open area, when the engine is cold. Wipe up any gasoline that spills.**
- **Never refill the fuel tank or drain the machine indoors or inside an enclosed trailer.**
- **Do Not fill the fuel tank completely full. Add gasoline to the fuel tank until the body of the tank is full but fuel does not fill the neck of the tank. This empty space in the tank allows gasoline to expand.**
- **Never smoke when handling gasoline, and stay away from an open flame or where gasoline fumes may be ignited by spark.**
- **Store gasoline in an approved container and keep it out of the reach of children. Never buy more than a 30-day supply of gasoline.**
- **Do Not operate without entire exhaust system in place and in proper working condition.**

In certain conditions during fueling, static electricity can be released causing a spark which can ignite gasoline vapors. A fire or explosion from gasoline can burn you and others and cause property damage.

- **Always place gasoline containers on the ground away from your vehicle before filling.**
- **Do Not fill gasoline containers inside a vehicle or on a truck or trailer bed because interior carpets or plastic truck bed liners may insulate the container and slow the loss of any static charge.**
- **When practical, remove gas-powered equipment from the truck or trailer and refuel the equipment with its wheels on the ground.**
- **If this is not possible, then refuel such equipment on a truck or trailer from a portable container, rather than from a gasoline dispenser nozzle.**
- **If a gasoline dispenser nozzle must be used, keep the nozzle in contact with the rim of the fuel tank or container opening at all times until fueling is complete.**

Gasoline is harmful or fatal if swallowed. Long-term exposure to vapors has caused cancer in laboratory animals. Failure to use caution may cause serious injury or illness.

- **Avoid prolonged breathing of vapors.**
- **Keep face away from nozzle and gas tank/container opening.**
- **Keep away from eyes and skin.**
- **Never siphon by mouth.**

Using Stabilizer/Conditioner

Use a fuel stabilizer/conditioner in the machine to provide the following benefits:

- Keeps gasoline fresh during storage of 30 days or less. For longer storage it is recommended that the fuel tank be drained.

- Cleans the engine while it runs.
- Eliminates gum-like varnish buildup in the fuel system, which causes hard starting Add the correct amount of gas stabilizer/conditioner to the gas.

Note: A fuel stabilizer/conditioner is most effective when mixed with fresh gasoline. To minimize the chance of varnish deposits in the fuel system, use fuel stabilizer at all times.

Gasoline/Alcohol blends

Gasohol (up to 10 percent ethyl alcohol, 90 percent unleaded gasoline by volume) is approved for fuel use by the engine manufacturer. Other gasoline/alcohol blends are not approved.

Filling the Fuel Tank

1. Shut the engine off and set the motion controls to the neutral position and engage parking brake.
2. Clean around the fuel tank cap and remove the cap.
3. Add unleaded regular gasoline until the body of the tank is full but fuel does not fill the neck of the tank (Figure 8). This space in the neck of the tank allows gasoline to expand. Do not fill the fuel tank completely full.

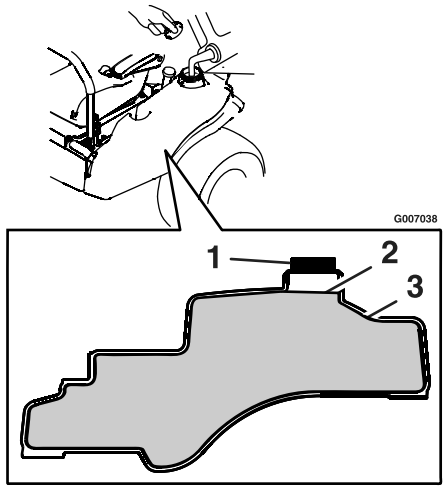

Figure 8

1. Gas tank opening
2. Fill to here, approximately
3. Gas tank body

4. Install the fuel tank cap securely. Wipe up any gasoline that may have spilled.

Checking the Engine Oil Level

Before you start the engine and use the machine, check the oil level in the engine crankcase; refer to the Checking the Oil Level section in Engine Maintenance.

Starting the Engine

1. Sit down on the seat and move the motion controls outward to the neutral position and engage the parking brake.
2. Disengage the blades by moving the blade control switch to Off (Figure 9).

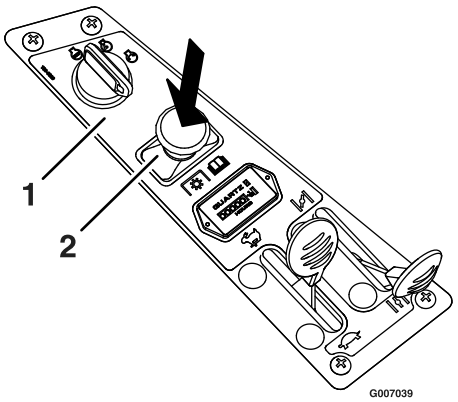

Figure 9

1. Control panel
2. Blade control switch—Off position

3. Move the throttle lever to midway and the choke lever forward before starting a cold engine (Figure 10).

   Note: A warm or hot engine may not require choking.

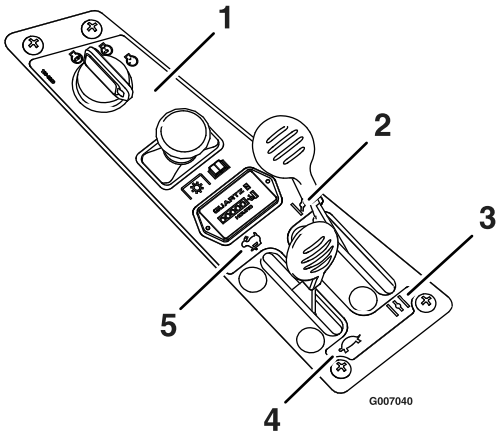

Figure 10

1. Control panel
2. Choke—on
3. Choke–off
4. Throttle—slow
5. Throttle—fast

4. Turn the ignition key to Start to energize the starter. When the engine starts, release the key (Figure 11).

   Important: Do not engage the starter for more than 5 seconds at a time. If the engine fails to start, allow a 60 second cool-down period between attempts. Failure to follow these instructions can burn out the starter motor.

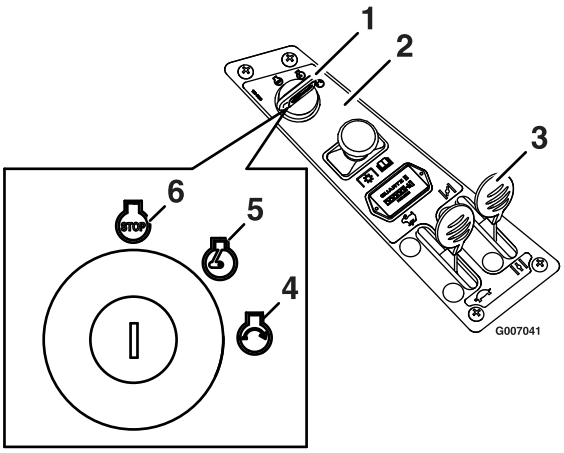

Figure 11

1. Ignition key—start position
2. Control panel
3. Choke
4. Start
5. Run
6. Off

5. If the engine stalls or hesitates, move the choke lever partially forward for a few seconds (Figure 11).

Operating the Blades

The blade control switch, represented by a power take-off (PTO) symbol, engages and disengages power to the mower blades. This switch controls power to any attachments that draw power from the engine, including the mower deck and cutting blades.

Engaging the Blades

1. Release pressure on the motion control levers and place the machine in neutral.
2. Move the throttle midway to the Fast position.

   Note: Always engage the blades with the throttle in the midway position.
3. Pull out on the blade control switch to On to engage the blades (Figure 12).

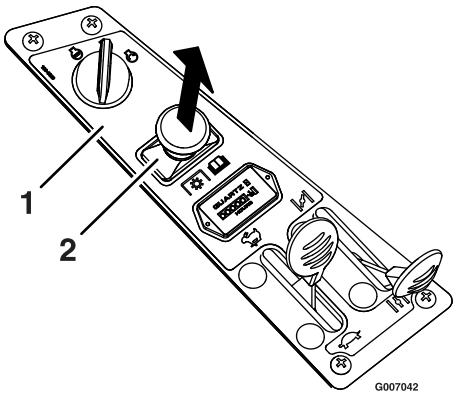

Figure 12

1. Control panel
2. Blade control switch—On position

4. Move throttle to full forward position before mowing.

Disengaging the Blades

Set throttle to midway position. Push the blade control switch to Off to disengage the blades (Figure 13).

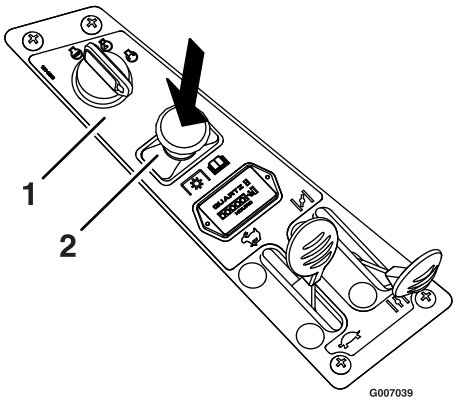

Figure 13

1. Control panel
2. Blade control switch—Off position

Stopping the Engine

1. Move the throttle lever to between Fast and half throttle (Figure 11).
2. Disengage the blades by moving the blade control switch to Off (Figure 13).
3. Turn the ignition key to Off (Figure 11).
4. Pull the wire off of the spark plug(s) to prevent the possibility of someone accidentally starting the machine before transporting or storing the machine.

The Safety Interlock System

If safety interlock switches are disconnected or damaged the machine could operate unexpectedly causing personal injury.

- **Do Not tamper with the interlock switches.**
- **Check the operation of the interlock switches daily and replace any damaged switches before operating the machine.**

Understanding the Safety Interlock System

The safety interlock system is designed to prevent the engine from starting unless:

- The blades are disengaged.
- The motion control levers are in the neutral position.
- The parking brake is engaged.

The safety interlock system is designed to initiate engine shutdown when:

- The parking brake is disengaged and the operator gets off machine.
- The PTO is engaged and the operator gets off machine.
- The parking brake is disengaged and levers are in and the operator gets off machine.
- The parking brake is engaged and motion control levers are in.

Testing the Safety Interlock System

Test the safety interlock system before you use the machine each time

1. Check starting circuit. Starter **should** crank with parking brake **engaged**, PTO **disengaged** and motion control levers moved out in the **neutral lock** position. The operator does not need to be in the seat to start the engine.

   Try to start with **operator in seat**, parking brake disengaged, PTO disengaged and motion control levers in the **neutral lock** position - starter **must not crank.**

   Try to start with **operator in seat,** parking brake **engaged**, PTO **engaged** and motion control levers in the **neutral lock** position - **starter must not crank**.

   Try to start with **operator in seat,** parking brake **engaged**, PTO **disengaged**, and the **left motion control lever in**, starter **must not crank,** repeat again with the **right lever in,** then with **both levers in** - **starter must not crank.**

2. Check kill circuits. Run engine at one-third throttle, **disengage** parking brake and **raise off** of seat (but do not get off of machine) engine **must initiate shutdown.**

   Run engine at one-third throttle, **engage PTO** and **raise off** of seat (but do not get off of machine) engine **must initiate shutdown.**

   Run engine at one-third throttle, with brake disengaged, move levers in and raise off seat (but do not get off of machine) engine **must initiate shutdown**.

   Again, run engine at one-third throttle, brake **engaged**, and move **left motion control lever in** - engine **must initiate shutdown**.

   Repeat again moving the **right lever in**, then moving **both levers in** - engine **must initiate shutdown** whether operator is on seat or not.

Note: If machine does not pass any of these tests, do not operate. Contact your authorized Toro Service Dealer.

Important: It is essential that operator safety mechanisms be connected and in proper operating condition prior to use for mowing.

Driving Forward or Backward

The throttle control regulates the engine speed as measured in rpm (revolutions per minute). Place the throttle control in the Fast position for best performance. Always operate in the Fast (full throttle) position.

Machine can spin very rapidly by positioning one lever too much ahead of the other. Operator may lose control of the machine, which may cause damage to the machine or injury.

- **Use caution when making turns.**
- **Slow the machine down before making sharp turns.**

Forward

1. Move the levers to the center, unlocked position.
2. To go forward, slowly push the motion control levers forward (Figure 14).

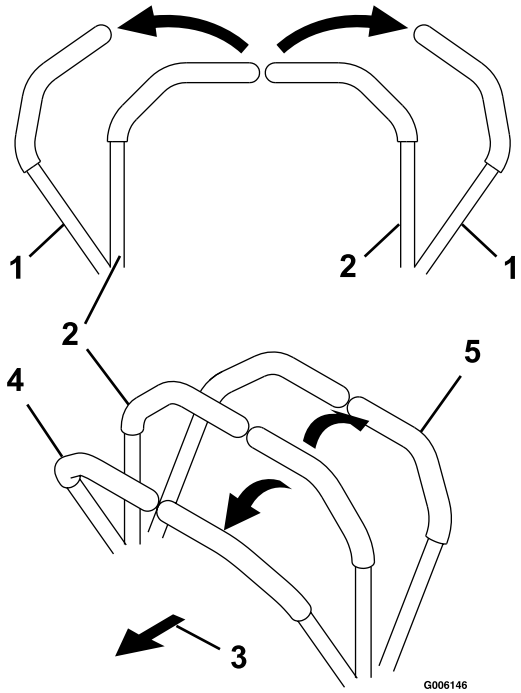

Figure 14

1. Neutral position
2. Center unlock position
3. Backward
4. Forward

To go straight, apply equal pressure to both motion control levers (Figure 14).

To turn, pull back on the motion control lever toward the direction you want to turn (Figure 14).

The farther you move the motion control levers in either direction, the faster the machine will move in that direction.

To stop, pull the motion control levers to neutral.

Backward

1. Move the levers to the center, unlocked position.
2. To go backward, slowly pull the motion control levers rearward (Figure 14).

   To go straight, apply equal pressure to both motion control levers (Figure 14).

   To turn, release the pressure on the motion control lever toward the direction you want to turn (Figure 14).

   To stop, push the motion control levers to neutral.

Stopping the Machine

To stop the machine, move the motion control levers to neutral and outward to the neutral position, disengage the blade control switch, move the throttle lever to between Fast and half throttle, and turn the ignition key to off. Remember to remove the key from the ignition switch.

Tracking Adjustment

If the machine turns right or left when handles are pushed forward together, adjust the stop on the side opposite the direction of turn (Figure 15). Loosen the screws that hold the motion control limiter stop. Move the stop back until the unit drives straight. Tighten the screws to lock the stop in place. Readjust handles if necessary.

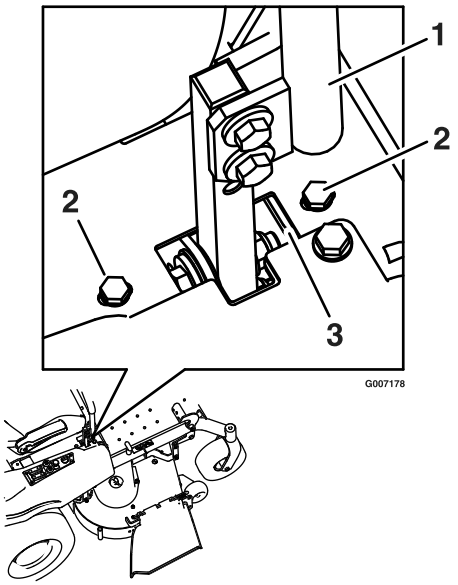

Figure 15

1. Control arm shaft
2. Limiter stop screws
3. Adjust stop

Children or bystanders may be injured if they move or attempt to operate the mower while it is unattended.

Always remove the ignition key and move the motion control levers outward to the neutral position and apply the parking brake when leaving the machine unattended, even if just for a few minutes.

Adjusting the Height of Cut

1. Raise the deck to the transport position (4.5 inch (114 mm) cut height) by pushing the foot actuated lever forward (Figure 16). The spring loaded transport pin will automatically engage and will click into place.

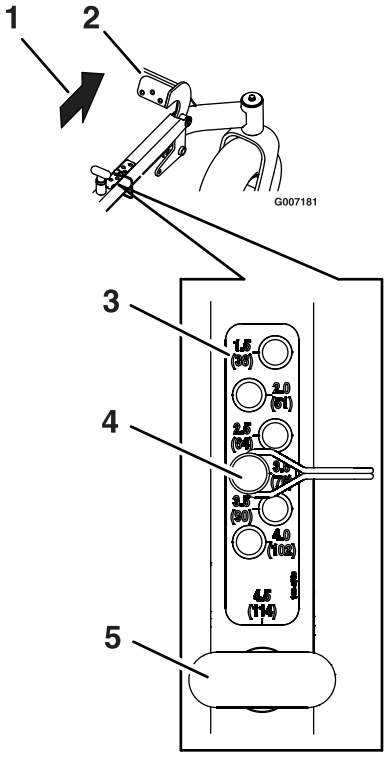

Figure 16

1. Push forward
2. Foot actuated height-of-cut lever
3. Height-of-cut positions
4. Height adjuster pin
5. Transport release handle

2. Move the deck height adjuster pin to the desired cut height.
3. Push the foot lever forward, pull the transport release handle up and let the deck lower down to the predetermined cut height by slowly decreasing foot pressure allowing the foot lever to travel rearward.

Positioning the Seat

The seat can move forward and backward. Position the seat where you have the best control of the machine and are most comfortable.

1. Push the adjustment lever towards the center of the machine to release the seat adjuster track (Figure 17).

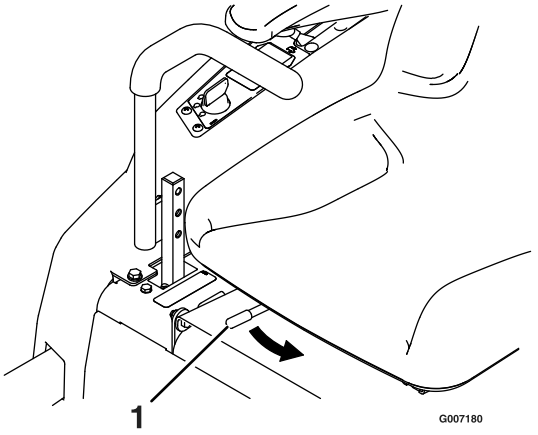

Figure 17

1. Adjustment lever

2. Move the seat to the desired position and release the lever to lock in that position.

Changing the Seat Ride Suspension

The number of seat springs can be changed to maximize rider comfort. More springs should be used with heavier operators and on rough terrain. Fewer springs should be used with lighter operators and when mowing smooth, well established lawns. Always keep the number of springs on the left and right side the same when adding and removing springs.

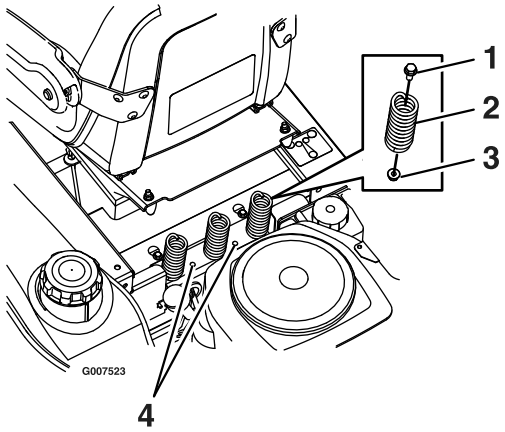

Figure 18

1. Bolt
2. Spring
3. Nut
4. Additional mounting holes

Up to five springs can be secured to the seat box with a nut and bolt, see Figure 18.

Refer to your Parts Manual for spring and hardware part numbers.

Adjusting the Motion Control Levers

Adjusting the Height

The motion control levers can be adjusted higher or lower for maximum operator comfort.

1. Remove the two bolts holding the control lever to the control arm shaft (Figure 19).

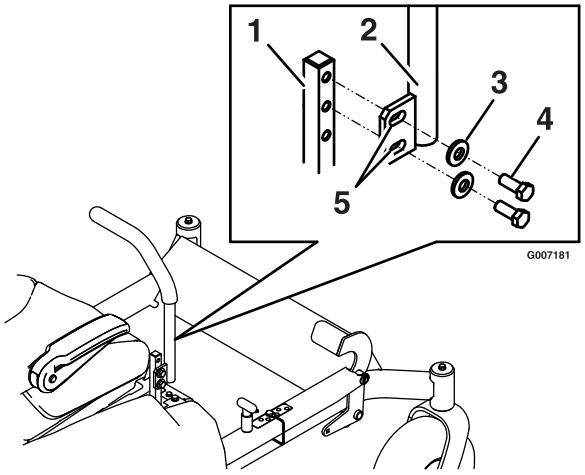

Figure 19

1. Control arm shaft
2. Control lever
3. Washer
4. Bolt
5. Slotted holes

2. Move the control lever to the next set of holes. Secure the lever with the two bolts.
3. Repeat the adjustment for the opposite control lever.

Adjusting the Tilt

The motion control levers can be tilted fore or aft for maximum operator comfort.

1. Loosen the upper bolt holding the control lever to the control arm shaft.
2. Loosen the lower bolt just enough to pivot the control lever fore or aft (Figure 19). Tighten both bolts to secure the control in the new position.
3. Repeat the adjustment for the opposite control lever.

Pushing the Machine by Hand

Important: Always push the machine by hand. Never tow the machine because damage may occur.

To Push the Machine

1. Park the machine on a level surface and disengage the blade control switch.
2. Move the motion control levers outward to neutral position, engage parking brake, stop the engine, remove the key, and wait for all moving parts to stop before leaving the operating position.
3. Locate the bypass release knobs on either side of the engine deck (Figure 20).

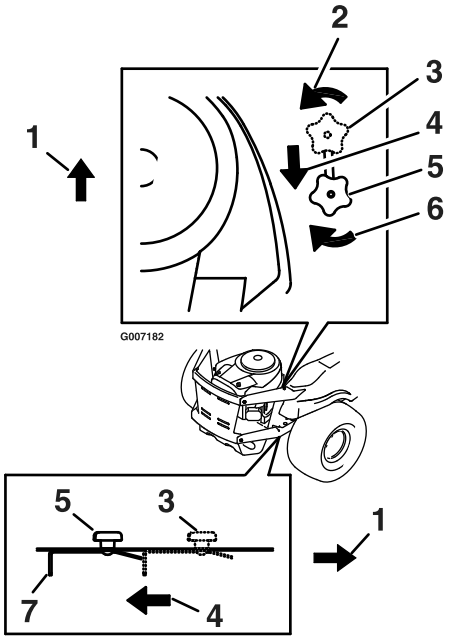

Figure 20

1. Front of the machine.
2. Rotate bypass release knob counterclockwise
3. Lever position for operating the machine.
4. Pull lever in this direction
5. Lever position for pushing the machine
6. Rotate bypass release knob clockwise
7. Release lever

4. Loosen the knob by turning counterclockwise. Then pull the release lever on the underside of machine (Figure 20) towards the back of the machine and retighten the knob to hold the release lever back in the released state. Repeat this on each side of the machine.
5. Release the parking brake. The machine is now able to be pushed by hand.

To Operate the Machine

Loosen the bypass knob, push the release levers forward, and retighten the knob to engage the drive system (Figure 20).

Side Discharge

The mower has a hinged discharge deflector that disperses clippings to the side and down toward the turf.

Without the discharge deflector, mulch kit, or entire grass collection system mounted in place, you and others are exposed to blade contact and thrown debris. Contact with rotating mower blade(s) and thrown debris will cause injury or death.

- **Never remove the discharge deflector from the mower because the discharge deflector routes material down toward the turf. If the discharge deflector is ever damaged, replace it immediately.**
- **Never put your hands or feet under the mower.**
- **Never try to clear discharge area or mower blades unless you move the move the blade control switch to Off and rotate the ignition key to Off. Also remove the key and pull the wire off the spark plug(s).**

Transporting

Transporting a Unit

Use a heavy-duty trailer or truck to transport the machine. Lock brake and block wheels. Securely fasten the machine to the trailer or truck with straps, chains, cable, or ropes. Be sure that the trailer or truck has all necessary lighting and marking as required by law. Secure a trailer with a safety chain.

This unit does not have proper turn signals, lights, reflective markings, or a slow moving vehicle emblem. Driving on a street or roadway without such equipment is dangerous and can lead to accidents causing personal injury. Driving on a street or roadway without such equipment may also be a violation of State laws and the operator may be subject to traffic tickets and/or fines.

Do Not drive a unit on a public street or roadway.

Loading a unit on a trailer or truck increases the possibility of backward tip-over. Backward tip-over could cause serious injury or death.

- **Use extreme caution when operating a unit on a ramp.**
- **Use only a single, full width ramp; Do Not use individual ramps for each side of the unit.**
- **If individual ramps must be used, use enough ramps to create an unbroken ramp surface wider than the unit.**
- **Do Not exceed a 15 degrees angle between ramp and ground or between ramp and trailer or truck.**
- **Avoid sudden acceleration while driving unit up a ramp to avoid tipping backward.**
- **Avoid sudden deceleration while backing unit down a ramp to avoid tipping backward.**

Loading a Unit

Use extreme caution when loading units on trailers or trucks. One full width ramp that is wide enough to extend beyond the rear tires is recommended instead of individual ramps for each side of the unit. The lower rear section of the tractor frame extends back between the rear wheels and serves as a stop for tipping backward. Having a full width ramp provides a surface for the frame members to contact if the unit starts to tip backward. If it is not possible to use one full width ramp, use enough individual ramps to simulate a full width continuous ramp.

Ramp should be long enough so that the angles between the ramp and the ground and the ramp and the trailer or truck do not exceed 15 degrees . A steeper angle may cause mower deck components to get caught as the unit moves from ramp to trailer or truck. Steeper angles may also cause the unit to tip backward. If loading on or near a slope, position the trailer or truck so it is on the down side of the slope and the ramp extends up the slope. This will minimize the ramp angle. The trailer or truck should be as level as possible.

Important: Do Not attempt to turn the unit while on the ramp, you may lose control and drive off the side.

Avoid sudden acceleration when driving up a ramp and sudden deceleration when backing down a ramp. Both maneuvers can cause the unit to tip backward.

Operating Tips

Fast Throttle Setting

For best mowing and maximum air circulation, operate the engine at the Fast position. Air is required to thoroughly cut grass clippings, so do not set the height-of-cut so low as to totally surround the mower by uncut grass. Always try to have one side of the mower free from uncut grass, which allows air to be drawn into the mower.

Cutting a Lawn for the First Time

Cut grass slightly longer than normal to ensure that the cutting height of the mower does not scalp any uneven ground. However, the cutting height used in the past is generally the best one to use. When cutting grass longer than six inches tall, you may want to cut the lawn twice to ensure an acceptable quality of cut.

Cut 1/3 of the Grass Blade

It is best to cut only about 1/3 of the grass blade. Cutting more than that is not recommended unless grass is sparse, or it is late fall when grass grows more slowly.

Mowing Direction

Alternate mowing direction to keep the grass standing straight. This also helps disperse clippings which enhances decomposition and fertilization.

Mow at Correct Intervals

Normally, mow every four days. But remember, grass grows at different rates at different times. So to maintain the same cutting height, which is a good practice, mow more often in early spring. As the grass growth rate slows in mid summer, mow less frequently. If you cannot mow for an extended period, first mow at a high cutting height; then mow again two days later at a lower height setting.

Cutting Speed

To improve cut quality, use a slower ground speed.

Avoid Cutting Too Low

If the cutting width of the mower is wider than the mower you previously used, raise the cutting height to ensure that uneven turf is not cut too short.

Long Grass

If the grass is ever allowed to grow slightly longer than normal, or if it contains a high degree of moisture, raise the cutting height higher than usual and cut the grass at this setting. Then cut the grass again using the lower, normal setting.

When Stopping

If the machine's forward motion must be stopped while mowing, a clump of grass clippings may drop onto your lawn. To avoid this, move onto a previously cut area with the blades engaged.

Keep the Underside of the Mower Clean

Clean clippings and dirt from the underside of the mower after each use. If grass and dirt build up inside the mower, cutting quality will eventually become unsatisfactory.

Blade Maintenance

Maintain a sharp blade throughout the cutting season because a sharp blade cuts cleanly without tearing or shredding the grass blades. Tearing and shredding turns grass brown at the edges, which slows growth and increases the chance of disease. Check the cutter blades daily for sharpness, and for any wear or damage. File down any nicks and sharpen the blades as necessary. If a blade is damaged or worn, replace it immediately with a genuine Toro replacement blade. Only Toro blades are to be used with this unit. No other blades are approved.

Maintenance

Recommended Maintenance Schedule(s)

Maintenance Service Interval	Maintenance Procedure
After the first 5 hours	• Change the engine oil.
After the first 200 hours	• Change the hydraulic system filter.
Before each use or daily	• Check the safety interlock system. • Check the air cleaner for dirty, loose or damaged parts. • Check the oil level before starting or after every 8 hours. • Check the hydraulic oil level in the expansion tank. • Check the mower blades. • Clean the underside of the mower housing.
Every 25 hours	• Grease all lubrication points. • Service the precleaner element. (more often under extremely dusty, dirty conditions) • Change the engine oil and filter when operating the engine under heavy load or in high temperatures. • Check the tire pressure. • Check the belts.
Every 50 hours	• Service the paper element. (more often under extremely dusty, dirty conditions) • Change the engine oil and filter.
Every 100 hours	• Replace the precleaner element. (more often under extremely dusty, dirty conditions) • Replace the paper element. (more often under extremely dusty, dirty conditions) • Clean the blower housing. More often under dirty conditions. • Replace the fuel filter.
Every 200 hours	• Service the spark plug.
Every 500 hours	• Replace the spark plug.
Before storage	• Charge the battery and disconnect the battery cables. • Perform all maintenance procedures before storage. • Paint any chipped surfaces.

Premaintenance Procedures

Raising the Seat

Make sure the motion control levers are locked in the neutral position. Lift the seat forward until the lanyard is tight. The following components can be accessed by raising the seat:

- Auxiliary 12V Plug (12V accessory up to 15 amp)
- Fuses
- Battery cables

Accessing the Battery

The battery is located under the seat. To access, raise the seat (Figure 21).

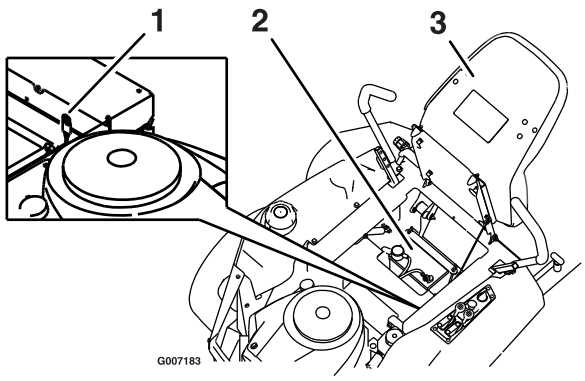

Figure 21

1. Auxiliary 12V Plug
2. Battery
3. Seat

Lubrication

Greasing the Bearings

Grease Type: NGLI grade #2 multi-purpose gun grease.

Grease the front caster pivots and wheels (Figure 22).

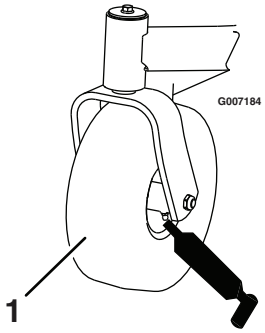

Figure 22

1. Front caster tire

1. Park the machine on a level surface and disengage the blade control switch.
2. Move the motion control levers outward to the neutral position, engage parking brake, stop the engine, remove the key, and wait for all moving parts to stop before leaving the operating position.
3. Clean the grease fittings (Figure 22 and Figure 23) with a rag. Make sure to scrape any paint off of the front of the fitting(s).

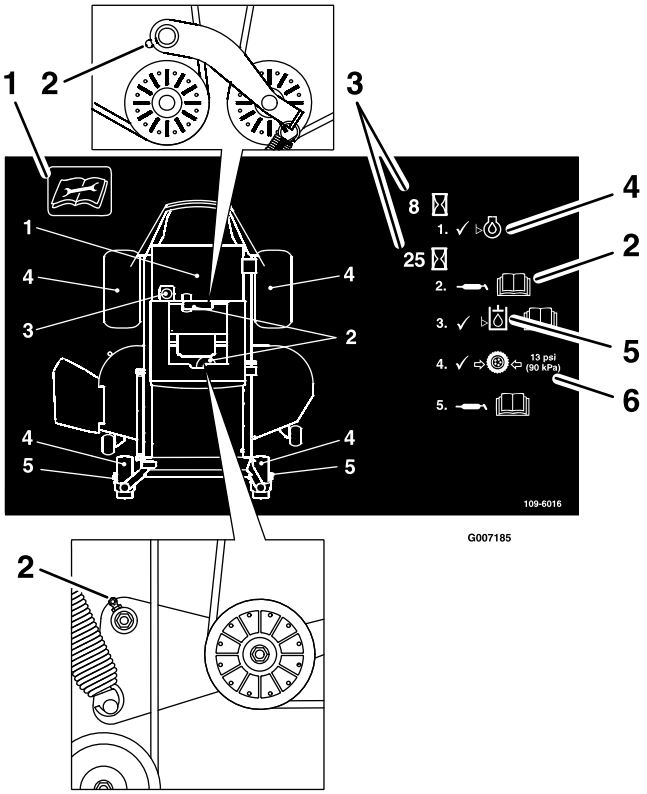

Figure 23

Located on the back of the seat.

1. Read the instructions before servicing or performing maintenance
2. Grease idler pivots.
3. Time interval.
4. Check oil level.
5. Check hydraulic oil level and refer to Operator's manual for further instructions.
6. Check tire pressure.

4. Connect a grease gun to each fitting (Figure 22 and Figure 23). Pump grease into the fittings until grease begins to ooze out of the bearings.
5. Wipe up any excess grease.

Engine Maintenance

Servicing the Air Cleaner

Service Interval: Before each use or daily—Check the air cleaner for dirty, loose or damaged parts.

This engine is equipped with a replaceable, high density paper air cleaner with a foam precleaner surrounding it. Check the air cleaner daily or before starting the engine. Check for a buildup of dirt and debris around the air cleaner system. Keep this area clean. Also check for loose or damaged components. Replace all bent or damaged air cleaner components.

Note: Operating the engine with loose or damaged air cleaner components could allow unfiltered air into the engine causing premature wear and failure.

Note: Service the air cleaner more often under extremely dusty, dirty conditions.

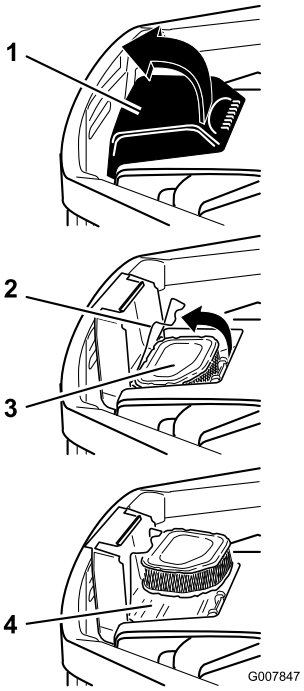

Figure 24

1. Air cleaner cover
2. Air cleaner latch
3. Paper element
4. Air cleaner base

Servicing Precleaner Element

Service Interval: Every 25 hours—Service the precleaner element. (more often under extremely dusty, dirty conditions)

Every 100 hours—Replace the precleaner element. (more often

under extremely dusty, dirty conditions)

1. Open the air cleaner cover door on the blower housing to access the air cleaner element (Figure 24).
2. Unhook the latch and remove the air cleaner element (Figure 24).
3. Clean the air cleaner base as required and check condition.
4. Carefully remove the precleaner from the paper element. Inspect the precleaner for any damage or tears. Replace as necessary.
5. Wash the precleaner in warm water with detergent. Rinse the precleaner thoroughly until all traces of detergent are eliminated. Squeeze out excess water (do not wring) and allow the precleaner to air dry.
6. Saturate the precleaner with new engine oil. Squeeze out all excess oil.
7. Install the precleaner over the paper element.
8. Install the air cleaner onto the air cleaner base. Secure with the latch.
9. Close the air cleaner cover door.

Servicing Paper Element

Service Interval: Every 50 hours—Service the paper element. (more often under extremely dusty, dirty conditions)

Every 100 hours—Replace the paper element. (more often under extremely dusty, dirty conditions)

1. Open the air cleaner cover door on the blower housing to access the air cleaner element (Figure 24).
2. Unhook the latch and remove the air cleaner element (Figure 24).
3. Carefully remove the precleaner from the paper element. Inspect the precleaner for any damage or tears. Replace as necessary.
4. Gently tap the paper element to dislodge dirt. **Do not wash the paper element or use pressurized air**, as this will damage the element. Replace a dirty, bent, or damaged element. Handle the new element carefully; do not use if the sealing surfaces are bent or damaged.
5. Clean the air cleaner base as required and check condition.
6. Install the air element onto the air cleaner base. Secure with the latch.
7. Close the air cleaner cover door.

Servicing the Engine Oil

Checking the Oil Level

Service Interval: Before each use or daily

1. Park the machine on a level surface, disengage the blade control switch, stop the engine, engage parking brake, and remove the key.
2. Make sure the engine is stopped, level, and is cool so the oil has had time to drain into the sump.
3. To keep dirt, grass clippings, etc., out of the engine, clean the area around the oil fill cap/dipstick before removing it.
4. Pull and remove the oil fill cap/dipstick; wipe oil off. Reinsert the dipstick and push firmly into place (Figure 25).

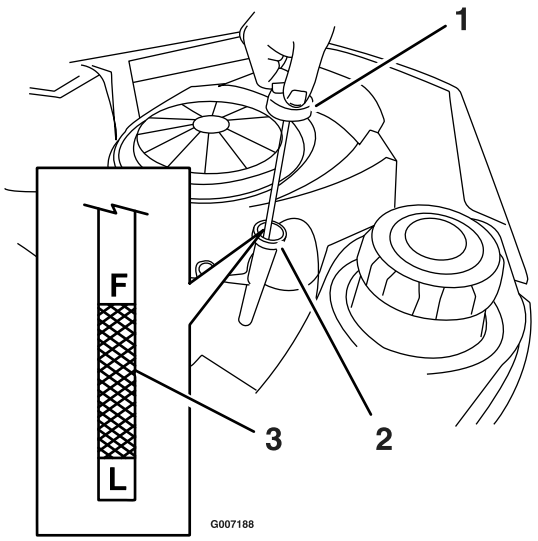

Figure 25

1. Oil dipstick
2. Filler tube
3. Oil level

5. Remove the dipstick and check the oil level.

   The oil level should be up to, but not over, the "F" mark on the dipstick.

6. If the level is low, add oil of the proper type, up to the "F" mark on the dipstick. Always check the level with the dipstick before adding more oil.

   Note: To prevent extensive engine wear or damage, always maintain the proper oil level in the crankcase. Never operate the engine with the oil level below the "L" mark or over the "F" mark on the dipstick.

Changing the Oil and Filter

Service Interval: After the first 5 hours

Every 50 hours thereafter.

Every 25 hours

Oil Type: Detergent oil (API service SF, SG, SH, SJ, or higher).

Crankcase Capacity: 2.0 qt (1.9 l) when the filter is changed.

Refill with service class SF, SG, SH, SJ or higher oil as specified in the "Viscosity Grades" table (Figure 26).

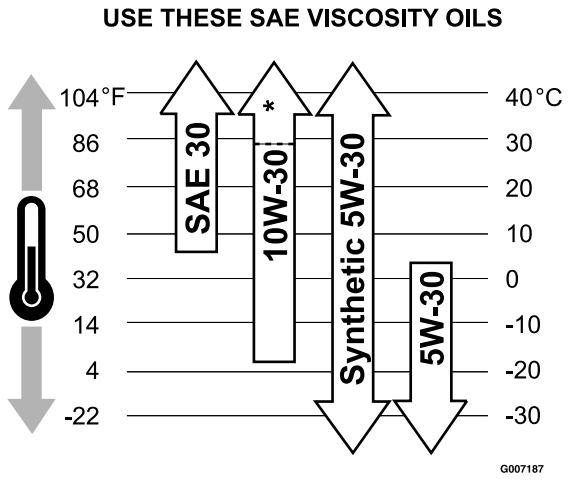

Figure 26
Viscosity Grades

SAE 30: 40 degrees F and higher (5 degrees C and higher) is good for all purpose use above 40 degrees F. Use below 40 degrees F will cause hard starting.

10W-30: 0 to 100 degrees F (-18 to 38 degrees C) is better for varying temperature conditions. This viscosity improves cold weather starting, but may increase oil consumption above 80 degrees F (27 degrees C).
* Check oil level frequently at higher temperatures.

Synthetic 5W-30: -20 to 120 degrees F (-30 to 40 degrees C) provides the best protection in all temperatures, as well as improved starting with less oil consumption.

5W-30: 40 degrees F and below (5 degrees C and below) is recommended for winter use and works best in cold conditions.

Change the oil and filter while the engine is still warm. The oil will flow more freely and carry away more impurities. Make sure the engine is level when filling, checking, or changing the oil.

1. Start the engine and let it run until warm. This warms the oil so it drains better.
2. Park the machine so that the drain side is slightly lower than the opposite side to assure the oil drains completely.
3. Disengage the blade control switch and move the motion controls outward to the neutral position and engage parking brake.
4. Stop the engine, remove the key, and wait for all moving parts to stop before leaving the operating position.
5. Clean the area around the drain plug and on the machine frame. Place a pan underneath machine directly below the drain hole in the frame as shown in Figure 27

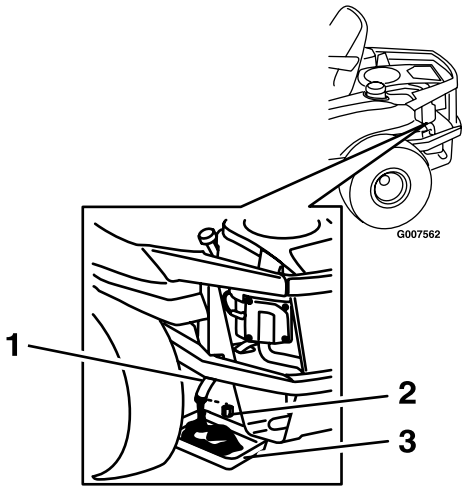

Figure 27

1. Oil drain hose
2. Oil drain plug
3. Pan

6. Remove the oil drain plug (Figure 27). Remove the oil fill cap/dipstick (Figure 25).

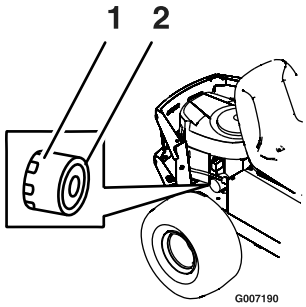

Figure 28

1. Oil filter
2. Gasket

7. Be sure to allow ample time for complete drainage.
8. Remove the old filter and wipe off the mounting pad (Figure 28).
9. When the oil has drained completely, install the oil drain plug. Tighten the plug to 14 N-m (125 in-lb) torque. Wipe up any excess oil on the frame (Figure 27).

   Note: Dispose of the used oil at a recycling center.

10. Apply a thin film of clean oil to the rubber gasket on the new filter.
11. Install the replacement oil filter to the mounting pad. Turn the oil filter clockwise until the rubber gasket contacts the pad, then tighten the filter an additional 1/2 to 3/4 turn (Figure 27).
12. Slowly pour approximately 80% of the specified oil into the filler tube.
13. Install the oil fill cap/dipstick and push firmly into place.
14. Check the oil level (Figure 25); refer to the Checking the Oil Level section.
15. Slowly add additional oil to bring it to the full mark.
16. Install the oil fill cap/dipstick and push firmly into place.

Servicing the Spark Plug

Service Interval: Every 200 hours/Every 2 years (whichever comes first)

Every 500 hours

As stated in the maintenance intervals, remove the spark plug, check condition, and reset the gap or replace with a new plug as necessary.

The spark plug is RFI compliant. Equivalent alternate brand plugs can also be used.

Type: Champion XC12YC

Air Gap: 0.030 inch (0.76 mm)

Removing the Spark Plug

1. Disengage the blade control switch, move the motion controls outward to the park position, stop the engine, and remove the key.
2. Pull the wire off of the spark plug (Figure 29). Clean around the spark plug to prevent dirt from falling into the engine and potentially causing damage.

   Note: Due to the deep recess around the spark plug, blowing out the cavity with compressed air is usually the most effective method for cleaning. The spark plug is most accessible when the blower housing is removed for cleaning.
3. Remove the spark plug and metal washer.

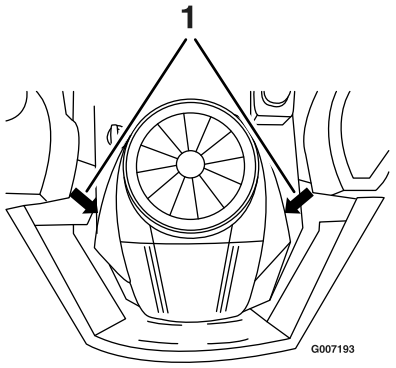

Figure 29

1. Spark plug and wire location

Checking the Spark Plug

1. Look at the center of the spark plug (Figure 30). If you see light brown or gray on the insulator, the engine is operating properly. A black coating on the insulator usually means the air cleaner is dirty.

   Important: Never clean the spark plug. Always replace the spark plug when it has a black coating, worn electrodes, an oily film, or cracks.
2. Check the gap between the center and side electrodes (Figure 30). Bend the side electrode if the gap is not correct.

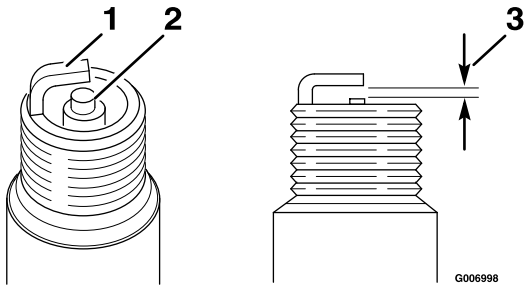

Figure 30

1. Side electrode
2. Center electrode insulator
3. Air gap (not to scale)

Installing the Spark Plug

1. Install the spark plug. Make sure that the air gap is set correctly.
2. Tighten the spark plug to 15 ft-lb (20 N-m).
3. Push the wire onto the spark plug (Figure 29).

Cleaning the Blower Housing

Service Interval: Every 100 hours/Yearly (whichever comes first) More often under dirty conditions.

To ensure proper cooling, make sure the grass screen, cooling fins, and other external surfaces of the engine are kept clean at all times.

1. Remove the blower housing and any other cooling shrouds.
2. Clean the cooling fins and external surfaces as necessary.
3. Make sure the cooling shrouds are reinstalled

Important: Operating the engine with a blocked grass screen, dirty or plugged cooling fins, and/or cooling shrouds removed, will cause engine damage due to overheating.

Fuel System Maintenance

In certain conditions, gasoline is extremely flammable and highly explosive. A fire or explosion from gasoline can burn you and others and can damage property.

- **Perform any fuel related maintenance when the engine is cold. Do this outdoors in an open area. Wipe up any gasoline that spills.**
- **Never smoke when draining gasoline, and stay away from an open flame or where a spark may ignite the gasoline fumes.**

Replacing the Fuel Filter

Service Interval: Every 100 hours/Yearly (whichever comes first)

Never install a dirty filter if it is removed from the fuel line.

1. Park the machine on a level surface and disengage the blade control switch.
2. Move the motion control levers outward to the neutral position, engage parking brake, stop the engine, remove the key, and wait for all moving parts to stop before leaving the operating position.
3. The fuel filter is in the fuel line between the tank and engine.
4. Turn fuel shut off valve 90 degrees to "off" position.
5. Squeeze the ends of the hose clamps together and slide them away from the filter (Figure 31).
6. Remove the filter from the fuel lines.
7. Install a new filter with the flow direction arrow coming from the fuel tank and pointing to the engine. Move the hose clamps close to the filter (Figure 31) to secure it in place.

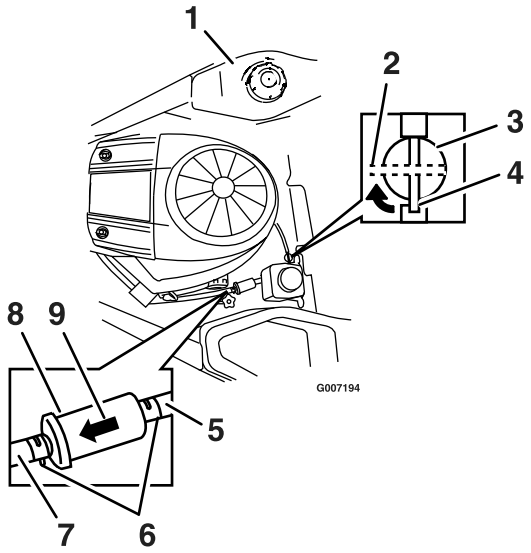

Figure 31

1. Fuel tank
2. Fuel shut off valve—off
3. Fuel shut off valve
4. Fuel shut off valve—on
5. Fuel line from tank
6. Hose clamps
7. Fuel line to engine
8. Filter
9. Flow direction arrow

8. Turn fuel shut off valve back to "on" position.

Electrical System Maintenance

Warning

CALIFORNIA
Proposition 65 Warning

Battery posts, terminals, and related accessories contain lead and lead compounds, chemicals known to the State of California to cause cancer and reproductive harm. Wash hands after handling.

Charging the Battery

Removing the Battery

Battery terminals or metal tools could short against metal machine components causing sparks. Sparks can cause the battery gasses to explode, resulting in personal injury.

- **When removing or installing the battery, do not allow the battery terminals to touch any metal parts of the machine.**
- **Do not allow metal tools to short between the battery terminals and metal parts of the machine.**

1. Park the machine on a level surface and disengage the blade control switch.
2. Move the motion control levers outward to the neutral position, engage parking brake stop the engine, remove the key, and wait for all moving parts to stop before leaving the operating position.
3. Raise the seat.
4. Disconnect the negative (black) ground cable from the battery post (Figure 32). Retain all fasteners.

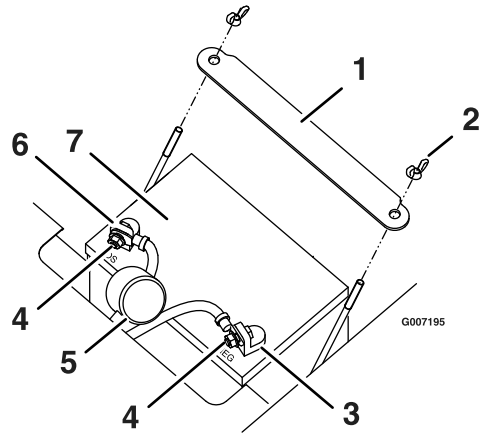

Figure 32

1. Battery hold-down
2. Wingnut
3. Negative battery post
4. Bolt, washer, and nut
5. Terminal boot
6. Positive battery post
7. Battery

Incorrect battery cable routing could damage the machine and cables causing sparks. Sparks can cause the battery gasses to explode, resulting in personal injury.

- **Always disconnect the negative (black) battery cable before disconnecting the positive (red) cable.**
- **Always connect the positive (red) battery cable before connecting the negative (black) cable.**

5. Slide the rubber cover up the positive (red) cable. Disconnect the positive (red) cable from the battery post. Retain all fasteners.
6. Remove the battery hold-down (Figure 32) and lift the battery from the battery tray.

Charging the Battery

1. Remove the battery from the chassis; refer to the Removing the Battery section.
2. Allowing batteries to stand for an extended period without recharging them will result in reduced performance and service life. To preserve optimum battery performance and life, recharge batteries in storage when the open circuit voltage drops to 12.4 volts.

   Note: To prevent damage due to freezing, battery should be fully charged before putting away for winter storage.

3. Check the voltage of the battery with a digital voltmeter. Locate the voltage reading of the battery in the table below and charge the battery for the recommended time interval to bring the charge up to a full charge of 12.6 volts or greater.

   Important: Make sure the negative battery cables are disconnected and the battery charger used for charging the battery has an output of 16 volts and 7 amps or less to avoid damaging the battery (see chart below for recommended charger settings).

Voltage Reading	Percent Charge	Maximum Charger Settings	Charging Interval
12.6 or greater	100%	16 volts/7 amps	No Charging Required
12.4 – 12.6	75–100%	16 volts/7 amps	30 Minutes
12.2 – 12.4	50–75%	16 volts/7 amps	1 Hour
12.0–12.2	25–50%	14.4 volts/4 amps	2 Hours
11.7–12.0	0–25%	14.4 volts/4 amps	3 Hours
11.7 or less	0%	14.4 volts/2 amps	6 Hours or More

4. When the battery is fully charged, unplug the charger from the electrical outlet, then disconnect the charger leads from the battery posts (Figure 33).

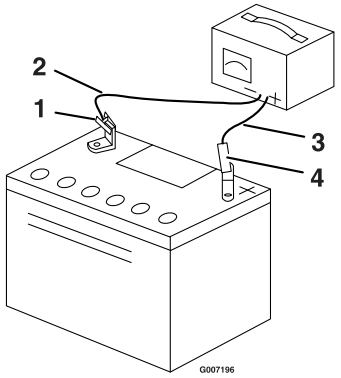

Figure 33

1. Negative battery post
2. Black (-) charger lead
3. Red (+) charger lead
4. Positive battery post

Note: Do Not run the machine with the battery disconnected, electrical damage may occur.

Installing the Battery

1. Position the battery in the tray with the terminal posts toward the operating position (Figure 32).

2. Install the positive (red) battery cable to the positive (+) battery terminal using the fasteners removed previously
3. Install the negative battery cable to the negative (-) battery terminal using the fasteners removed previously.
4. Slide the red terminal boot onto the positive (red) battery post.
5. Secure the battery with the hold-down (Figure 32).

Servicing the Fuses and Relay

The electrical system is protected by fuses. It requires no maintenance; however, if a fuse blows, check the component/circuit for a malfunction or short. There is also a replaceable relay/s next to the fuse. Refer to your Parts manual for correct replacement components.

Fuse: Block:

- Main: 25 amp fuse, blade-type
- Charge Circuit: 20 amp fuse, blade-type
- Auxiliary circuit: 15 amp fuse, blade-type
- Diode: TVS

1. Raise the seat to gain access to the fuse holder (Figure 34).

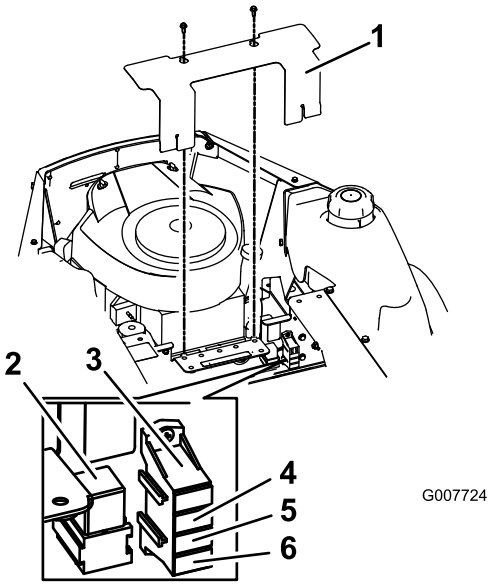

Figure 34

1. Cover
2. Relay
3. Auxilliary–15 amp
4. Charge–20 amp
5. Main–25 amp
6. Diode

2. Remove cover as shown in Figure 34.
3. To replace a fuse, pull out on the fuse to remove it

Drive System Maintenance

Checking the Tire Pressure

Service Interval: Every 25 hours/Monthly (whichever comes first)

Maintain the air pressure in the front and rear tires as specified. Uneven tire pressure can cause uneven cut. Check the pressure at the valve stem (Figure 35).

Check the tires when they are cold to get the most accurate pressure reading.

Rear Tires: 13 psi (90 kPa)

Front Tires (caster wheels): 13 psi (90 kPa)

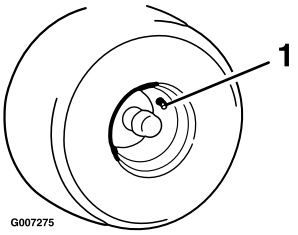

Figure 35

1. Valve stem

Hydraulic System Maintenance

Checking the Hydraulic Oil Level

Service Interval: Before each use or daily

Check expansion tank and if necessary add MOBIL 1 15W-50 synthetic motor oil to the FULL COLD line

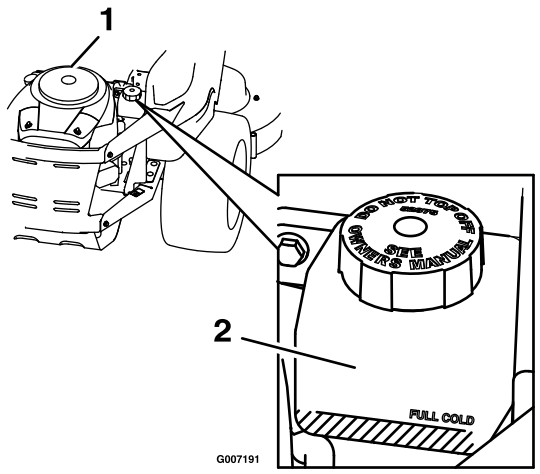

Figure 36

1. Engine
2. Expansion tank

Change the Hydraulic System Filter

Service Interval: After the first 200 hours

Note: Use only MOBIL 1 15W-50 Synthetic motor oil.

1. Stop engine, wait for all moving parts to stop, and allow engine to cool. Remove key and engage parking brake.
2. Locate the two filters under the transmissions. Remove filter guards.
3. Carefully clean area around filters. It is important that no dirt or contamination enter hydraulic system.
4. Unscrew filters to remove and allow oil to drain from drive system.

   Important: Before reinstalling new filters, apply a thin coat of oil on the surface of the filters rubber seal.

   Turn the filters clockwise until rubber seal contacts the filter adapter then tighten the filter an additional 3/4 to 1 full turn.
5. Remove the vent plug on each transmission and fill through expansion reservoir, when oil comes out of vent reinstall plug. Torque plugs to 180 in-lb (244 N-m). Continue to add oil until it reaches the FULL COLD line on the expansion reservoir.

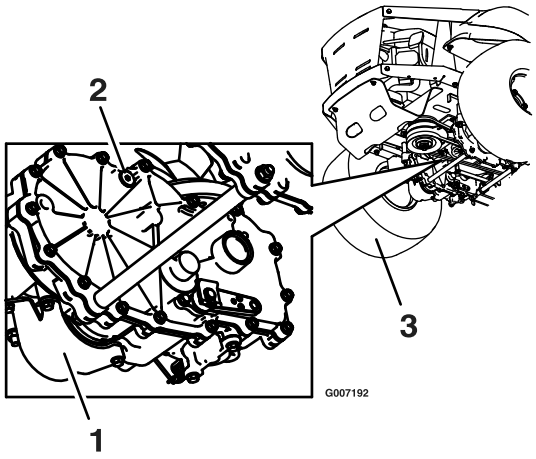

Figure 37

1. Oil filter
2. Vent plug
3. Left rear tire

6. Raise the rear of machine up and support with jack stands (or equivalent support) just high enough to allow drive wheels to turn freely.
7. Start engine and move throttle control ahead to 1/2 throttle position. Disengage parking brake.
   A. With the bypass valve open and the engine running, slowly move the directional control in both forward and reverse (5 or 6 times).
   B. With the bypass valve closed and the engine running, slowly move the directional control in both forward and reverse directions (5 to 6 times). Check the oil level, and add oil as required after stopping the engine.
   C. It may be necessary to repeat steps and until all the air is completely purged from the system. When the transaxle operates at normal noise levels and moves smoothly forward and reverse at normal speeds, then the transaxle is considered purged.

Do Not change hydraulic system oil (except for what can be drained when changing filter), unless it is felt the oil has been contaminated or been extremely hot.

Changing oil unnecessarily could damage hydraulic system by introducing contaminates into the system.

Mower Maintenance

Servicing the Cutting Blades

Service Interval: Before each use or daily

Maintain sharp blades throughout the cutting season because sharp blades cut cleanly without tearing or shredding the grass blades. Tearing and shredding turns grass brown at the edges, which slows growth and increases the chance of disease.

Check the cutter blades daily for sharpness, and for any wear or damage. File down any nicks and sharpen the blades as necessary. If a blade is damaged or worn, replace it immediately with a genuine Toro replacement blade. For convenient sharpening and replacement, you may want to keep extra blades on hand.

A worn or damaged blade can break, and a piece of the blade could be thrown into the operator's or bystander's area, resulting in serious personal injury or death.

- **Inspect the blade periodically for wear or damage.**
- **Replace a worn or damaged blade.**

Before Inspecting or Servicing the Blades

Park the machine on a level surface, disengage the blade control switch, and move the motion control levers outward to the neutral position and engage parking brake. Stop the engine, remove the key, and disconnect the spark plug wire(s) from the spark plug(s).

Inspecting the Blades

1. Inspect the cutting edges (Figure 38). If the edges are not sharp or have nicks, remove and sharpen the blades; refer to the Sharpening the Blades section.
2. Inspect the blades, especially the curved area. If you notice any damage, wear, or a slot forming in this area (item 3 in Figure 38), immediately install a new blade.

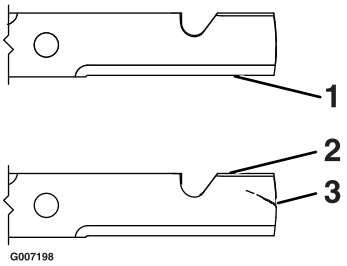

Figure 38

1. Cutting edge
2. Curved area
3. Wear/slot forming

Checking for Bent Blades

1. Rotate the blades until the ends face forward and backward (Figure 39). Measure from a level surface to the cutting edge, of the blades. Note this dimension.

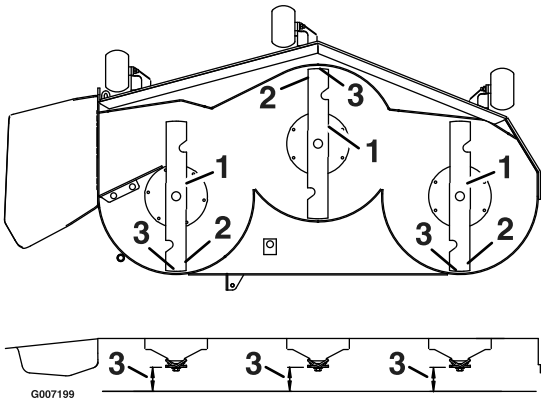

Figure 39

1. Blades front to rear
2. Outside cutting edges
3. Measure here

2. Rotate the opposite ends of the blades forward.
3. Measure from a level surface to the cutting edge of the blades at the same position as in step 1. The difference between the dimensions obtained in steps and must not exceed 1/8 inch (3 mm). If this dimension exceeds 1/8 inch (3 mm), the blade is bent and must be replaced. Refer to the Removing the Blades and Installing the Blades section.

A blade that is bent or damaged could break apart and could seriously injure or kill you or bystanders.

- **Always replace bent or damaged blade with a new blade.**
- **Never file or create sharp notches in the edges or surfaces of blade.**

Checking for Loose Blades or Damaged Spring Disc Washers

1. Place a wrench on the blade bolt and torque to 45-55 ft lb (61-75 N-m).
2. With the wrench still on the blade bolt, hold the blade spindle stationary and using a rag or thickly padded glove, try to rotate the blade. If the blade rotates relative to the spindle guard without further tightening the blade bolt, the spring disc washer has been flattened or damaged and the bolt and washer assembly must be replaced (Figure 40). Refer to the Removing the Blades and Installing the Blades section.
3. Once the blade has been removed, inspect the spring disc washer. If the washer appears to be damaged (the washer surface has been marred) or flattened, the bolt and washer assembly must be replaced.

Removing the Blades

The blades must be replaced if a solid object is hit, if the blade is out of balance, or the blade is bent. To ensure optimum performance and continued safety conformance of the machine, use genuine Toro replacement blades. Replacement blades made by other manufacturers may result in an unsafe machine.

Hold the blade end using a rag or thickly-padded glove (or place a wrench on the top sheave nut). Remove the blade bolt and washer assembly, washer, and blade from the spindle shaft (Figure 40).

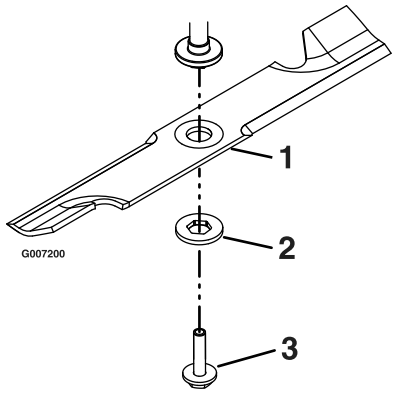

Figure 40

1. Blade
2. Washer
3. Bolt and washer assembly

Sharpening the Blades

1. Use a file to sharpen the cutting edge at both ends of the blade (Figure 41). Maintain the original angle. The blade retains its balance if the same amount of material is removed from both cutting edges.

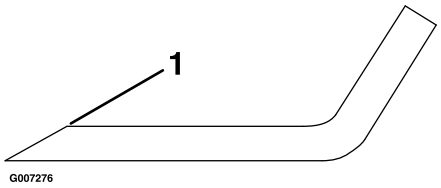

Figure 41

1. Sharpen at original angle

2. Check the balance of the blade by putting it on a blade balancer (Figure 42). If the blade stays in a horizontal position, the blade is balanced and can be used. If the blade is not balanced, file some metal off the end of the sail area only (Figure 42). Repeat this procedure until the blade is balanced.

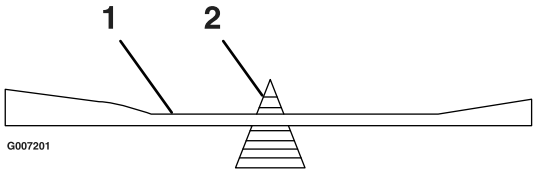

Figure 42

1. Blade
2. Balancer

Installing the Blades

1. Install the blade onto the spindle shaft (Figure 40).

   Important: The curved part of the blade must be pointing upward toward the inside of the mower to ensure proper cutting.
2. Hold the blade end using a rag or thickly-padded glove (or place a wrench on the top sheave nut). Install the washer and blade bolt and washer assembly.
3. Torque the blade bolt to 45-55 ft-lb (61-75 N-m).

Incorrect installation of the blade or components used to retain the blade cause the blade to come loose and could seriously injure or kill you or bystanders.

Always install the original Toro blades, washers and blade bolts as shown.

Leveling the Mower Deck

The mower blades must be level from side to side. Check the side-to-side level any time you install the mower or when you see an uneven cut on your lawn.

1. Park the machine on a level surface and disengage the blade control switch.

2. Move the motion control levers outward to the neutral position, engage parking brake, stop the engine, remove the key, and wait for all moving parts to stop before leaving the operating position.
3. Check the air pressure of all four tires. If needed, adjust to the recommended inflation; refer to the Checking the Tire Pressure section in Drive System Maintenance . If either one is out of range then follow adjustment procedure.
4. Carefully rotate the blades side to side.
5. Measure between the outside cutting edges and the flat surface (Figure 43). If both measurements are not within 3/16 inch (5 mm), an adjustment is required; continue with this procedure.

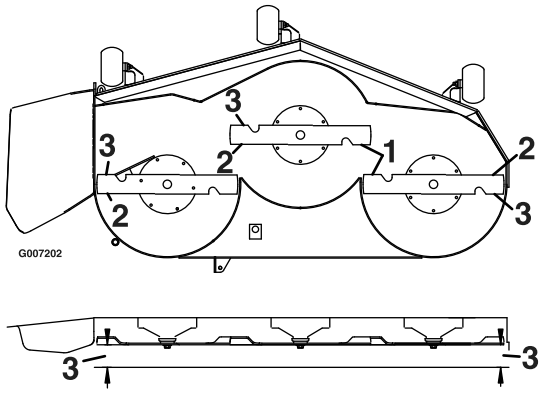

Figure 43

1. Blades side to side
2. Outside cutting edges
3. Measure here

6. Check the front-to-rear blade level any time you install the mower. If the front blade tip is not 1/16-5/16 inch (1.6-7.9 mm) lower than the rear blade tip, adjust the blade level. If measurements from steps or are out of range, then follow the Adjusting the Blade Slope section.
7. Set anti-scalp rollers to top holes or remove completely for this adjustment.
8. Set the height-of-cut lever to the 3 inch (76 mm) position. Place two 2 1/2 inch (6.35 cm) thick blocks under the rear edge of the cutting deck skirt; one on each side of the cutting deck. Place two 2 5/16 inch (5.89 cm) blocks under each side of the front edge of the deck, but not under the anti-scalp roller brackets.
9. Carefully rotate the blades side to side (Figure 43).
10. Loosen the leveling adjust locking nuts (item 4) on all four corners so that the deck is sitting securely on all four blocks. Make sure that the deck hangers are all the way down (at the top of the slot) and the deck lift foot lever is pushed back against the stop, then tighten the four leveling adjust locking nuts
11. Recheck that blocks fit just snugly under the deck skirt. Make sure all attachment bolts are tight
12. Continue leveling the deck by checking the front-to-rear blade slope; refer to the Adjusting the Front-to-Rear Blade Slope section.
13. Recheck blades for levelness and repeat deck leveling procedure if necessary.

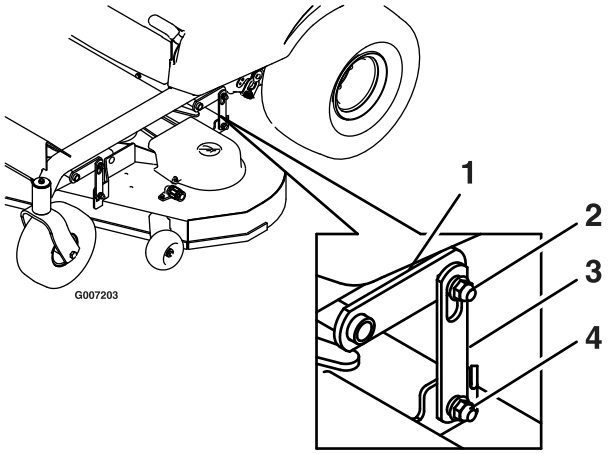

Figure 44

1. Deck lift arm
2. Float retaining nut
3. Deck hanger
4. Leveling adjust locking nut

Adjusting the Blade Slope

1. Check the front-to-rear blade level any time you install the mower. If the front blade tip is not 1/16-5/16 inch (1.6-7.9 mm) lower than the rear blade tip, adjust the blade level using the following instructions:
2. Park the machine on a level surface and disengage the blade control switch.
3. Move the motion control levers outward to the neutral position, engage the parking brake, stop the engine, remove the key, and wait for all moving parts to stop before leaving the operating position.
4. Check the air pressure of all four tires. If needed, adjust to the recommended inflation; refer to the Checking the Tire Pressure section in Drive System Maintenance.
5. Check and adjust the side-to-side blade level if you have not checked the setting; refer to the Leveling the Mower section.
6. Set the height-of-cut lever to the 3 inch (76 mm) position. Place two 2 1/2 inch (6.35 cm) thick blocks under the rear edge of the cutting deck skirt; one on each side of the cutting deck. Place two 2 5/16 inch

(5.89 cm) blocks under each side of the front edge of the deck, but not under the anti-scalp roller brackets.

7. Loosen the leveling adjust locking nuts (item 4) on all four corners so that the deck is sitting securely on all four blocks. Make sure that the deck hangers are all the way down (at the top of the slot) and the deck lift foot lever is pushed back against the stop, then tighten the four leveling adjust locking nuts (Figure 45).

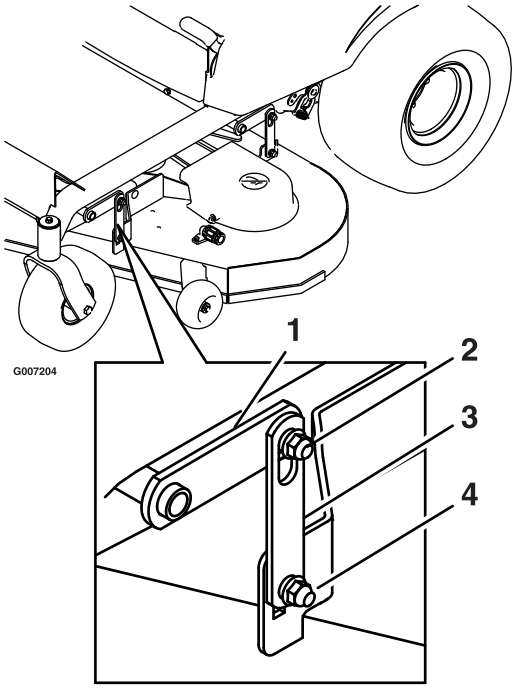

Figure 45

1. Deck lift arm
2. Float retaining nut
3. Deck hanger
4. Leveling adjust locking nut

8. Carefully rotate the blades so they are facing front to rear (Figure 46).

9. Measure from the tip of the front blade to the flat surface and the tip of the rear blade to the flat surface (Figure 46). If the front blade tip is not 1/16-5/16 inch (1.6-7.9 mm) lower than the rear blade tip, adjust the front deck hanger.

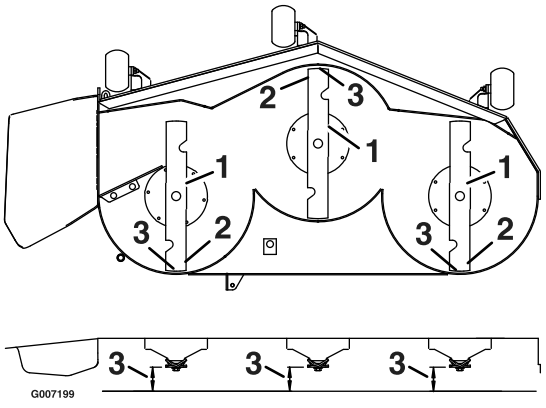

Figure 46

1. Blades front to rear
2. Outside cutting edges
3. Measure here

10. When the front-to-rear blade slope is correct check the side-to-side level of the mower again; refer to the Leveling the Mower section.

Removing the Mower Deck

1. Park the machine on a level surface and disengage the blade control switch
2. Move the motion control levers outward to the neutral position, engage parking brake, stop the engine, remove the key, and wait for all moving parts to stop before leaving the operating position.
3. Place blocks under deck for support. Lower the height-of-cut lever to the lowest position.
4. Remove the hardware from the deck hanger and deck lift arm on both sides of the deck (Figure 47).

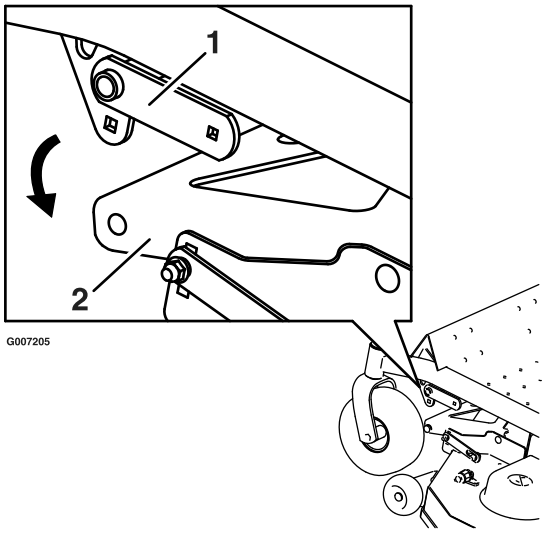

Figure 47

1. Deck lift arm
2. Deck hanger

5. Remove the nut, bolt, and pivot bushing from the deck strut (Figure 47). Carefully lower the front of the mower deck to the ground (Figure 48).

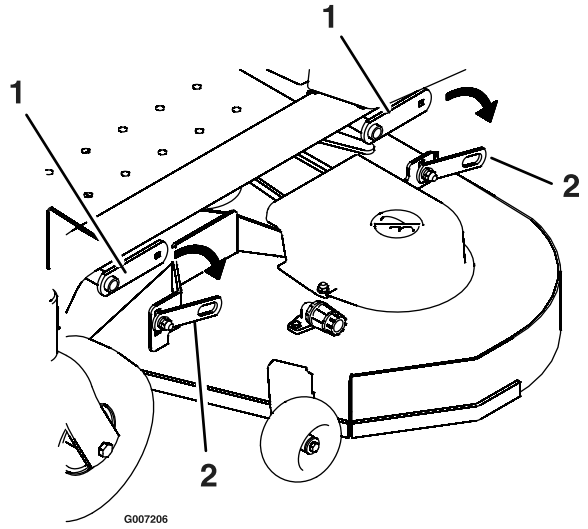

Figure 48

1. Deck lift arm
2. Deck strut

6. Slide the mower rearward to remove the mower belt from the engine pulley.
7. Slide the mower out from underneath the machine.

   Note: Retain all parts for future installation.

Mower Belt Maintenance

Inspecting the Belts

Service Interval: Every 25 hours

Check the belts for cracks, frayed edges, burn marks, or any other damage. Replace damaged belts.

Replacing the Mower Belt

Squealing when the belt is rotating, blades slipping when cutting grass, frayed belt edges, burn marks, and cracks are signs of a worn mower belt. Replace the mower belt if any of these conditions are evident.

1. Park the machine on a level surface and disengage the blade control switch.
2. Move the motion control levers outward to the neutral position, engage parking brake, stop the engine, remove the key, and wait for all moving parts to stop before leaving the operating position.
3. Set the height-of-cut at 1-1/2 inch (38 mm).
4. Remove the belt covers over the outside spindles.
5. Pull the idler pulley in the direction shown in and roll the belt off of the pulleys.

The spring is under tension when installed and can cause personal injury.

Be careful when removing the belt.

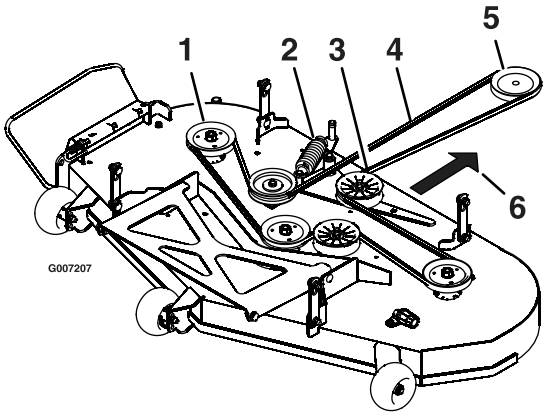

Figure 49

1. Outside puley
2. Spring
3. Idler pulley
4. Mower belt
5. Engine pulley
6. Pull idler in this direction.

6. Route the new belt around the engine pulley and mower pulleys.
7. Pull the idler pulley in the direction shown in and route the belt onto the idler pulley.
8. Install the belt covers over the outside spindles.

Installing the Mower Deck

1. Park the machine on a level surface and disengage the blade control switch.
2. Move the motion control levers outward to the neutral position, engage parking brake, stop the engine, remove the key, and wait for all moving parts to stop before leaving the operating position.
3. Slide the mower under the machine.
4. Lower the height-of-cut lever to the lowest position.
5. Use the existing hardware to attach the rear deck strut of the mower to the deck lift arm (Figure 48).
6. Attach the hardware from the deck hanger and deck lift arm on both sides of the deck (Figure 47).
7. Install the mower belt onto the engine pulley; refer to the Replacing the Mower Belt section.

Replacing the Discharge Deflector

An uncovered discharge opening could allow the lawn mower to throw objects in the operator's or bystander's direction and result in serious injury. Also, contact with the blade could occur.

Never operate the lawn mower unless you install a mulch plate, discharge deflector, or grass collection system.

1. Disengage the spring from the notch in the deflector bracket and slide the rod out of the welded deck brackets, spring, and discharge deflector (Figure 50). Remove the damaged or worn discharge deflector.

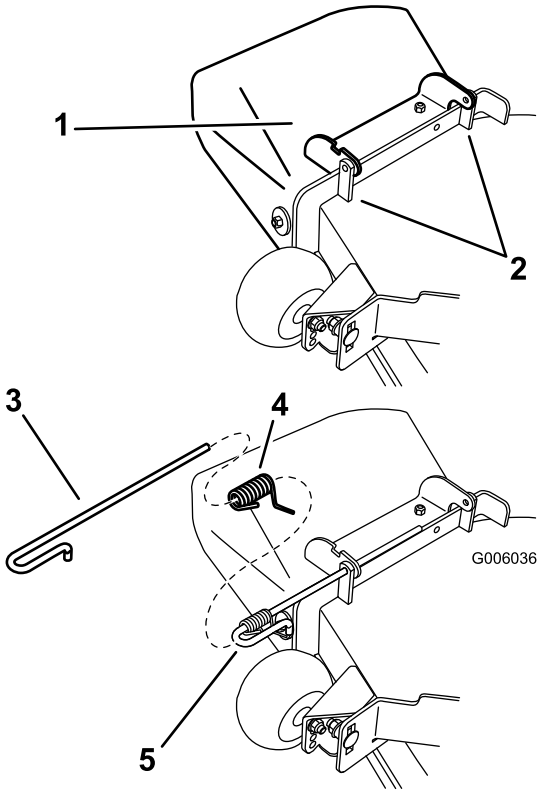

Figure 50

1. Deflector assembly
2. Deck brackets
3. Rod
4. Spring
5. Spring installed over the rod

2. Position the new discharge deflector assembly with the bracket ends between the welded brackets on the deck as shown in Figure 50.
3. Install the spring onto the straight end of the rod. Position the spring on the rod as shown in so the shorter spring end is coming from under the rod before the bend and going over the rod as it returns from the bend.
4. Lift the long end of the spring and place it into the notch on the deflector assembly bracket (Figure 51).

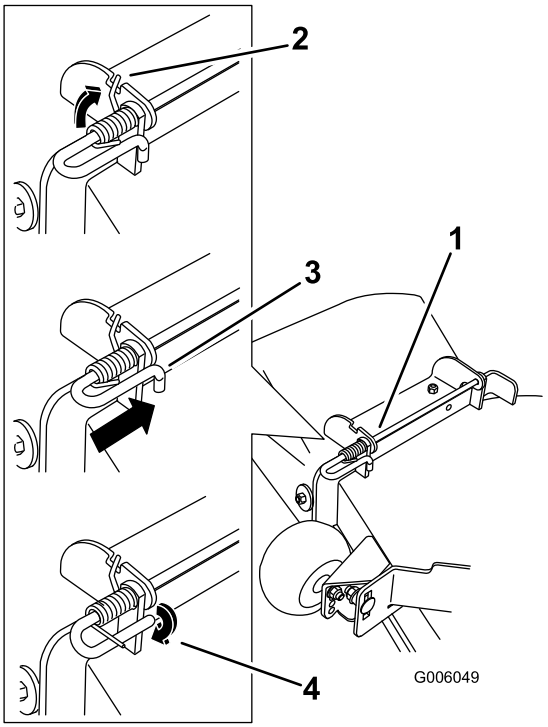

Figure 51

1. Rod and spring assembly partially installed
2. Long end of the spring installed into the notch in the deflector bracket
3. Rod, short end, moved behind mower bracket
4. Short end, retained by mower bracket.

5. Secure the rod and spring assembly by twisting it so the short end of the rod can be placed behind the front bracket welded to the deck (Figure 51).

Important: The discharge deflector must be spring loaded in the down position. Lift the deflector up to test that it snaps to the full down position.

Cleaning

Washing the Underside of the Mower

Service Interval: Before each use or daily

After each use, wash the underside of the mower to prevent grass buildup for improved mulch action and clipping dispersal.

1. Park the machine on a level surface and disengage the blade control switch.
2. Move the motion control levers outward to the neutral position, engage parking brake, stop the engine, remove the key, and wait for all moving parts to stop before leaving the operating position.
3. Attach the hose coupling to the end of the mower washout fitting, and turn the water on high (Figure 52).

   Note: Spread petroleum jelly on the washout fitting O-ring to make the coupling slide on easier and protect the O-ring.

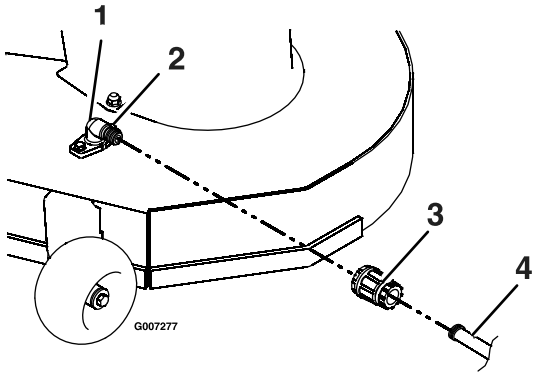

Figure 52

4. Lower the mower to the lowest height-of-cut.
5. Sit on the seat and start the engine. Engage the blade control switch and let the mower run for one to three minutes.
6. Disengage the blade control switch, stop the engine, and remove the ignition key. Wait for all moving parts to stop.
7. Turn the water off and remove the coupling from the washout fitting.

   Note: If the mower is not clean after one washing, soak it and let it stand for 30 minutes. Then repeat the process.
8. Run the mower again for one to three minutes to remove excess water.

A broken or missing washout fitting could expose you and others to thrown objects or blade contact. Contact with blade or thrown debris can cause injury or death.

- **Replace broken or missing washout fitting immediately, before using mower again.**
- **Plug any hole(s) in mower with bolts and locknuts.**
- **Never put your hands or feet under the mower or through openings in the mower.**

Storage

Cleaning and Storage

1. Disengage the blade control switch, move the motion controls outward to the neutral position, engage parking brake, stop the engine, and remove the key.
2. Remove grass clippings, dirt, and grime from the external parts of the entire machine, especially the engine. Clean dirt and chaff from the outside of the engine cylinder head fins and blower housing.

   Important: You can wash the machine with mild detergent and water. Do Not pressure wash the machine. Avoid excessive use of water, especially near the control panel, engine, hydraulic pumps, and motors.
3. Service the air cleaner; refer to the Servicing the Air Cleaner section in Engine Maintenance.
4. Grease and oil the machine; refer to the Lubrication section.
5. Change the crankcase oil and filter; refer to the Servicing the Engine Oil section in Engine Maintenance.
6. Check the tire pressure; refer to the Checking the Tire Pressure section in Drive System Maintenance.
7. Charge the battery; refer to the Servicing the Battery section in Electrical System Maintenance.
8. Check the condition of the blades; refer to Servicing the Cutting Blades in Mower Maintenance.
9. Prepare the machine for storage when non-use occurs over 30 days. Prepare the machine for storage as follows.
   A. Add a petroleum based stabilizer/conditioner to the fuel in the tank. Follow the mixing instructions from the stabilizer manufacturer. Do Not use an alcohol based stabilizer (ethanol or methanol).

      Note: A fuel stabilizer/conditioner is most effective when mixed with fresh gasoline and used at all times.

   B. Run the engine to distribute the conditioned fuel through the fuel system (5 minutes).
   C. Stop the engine, allow it to cool, and drain the fuel tank; refer to the Draining the Fuel Tank in Fuel System Maintenance.
   D. Restart the engine and run it until it stops.
   E. Choke the engine. Start and run the engine until it will not start.
   F. Dispose of fuel properly. Recycle as per local codes.

      Important: Do not store stabilizer/conditioned gasoline over 30 days.
10. Remove the spark plug(s) and check its condition; refer to the Servicing the Spark Plug section in Engine Maintenance. With the spark plug(s) removed from the engine, pour two tablespoons of engine oil into the spark plug hole. Use the starter to crank the engine and distribute the oil inside the cylinder. Install the spark plug(s). Do Not install the wire on the spark plug(s).
11. Clean any dirt and chaff from the top of the mower.
12. Scrape any heavy buildup of grass and dirt from the underside of the mower, then wash the mower with a garden hose.
13. Check the condition of the drive and mower belts.
14. Check and tighten all bolts, nuts, and screws. Repair or replace any part that is worn or damaged.
15. Paint all scratched or bare metal surfaces. Paint is available from your Authorized Service Dealer.
16. Store the machine in a clean, dry garage or storage area. Remove the key from the ignition switch and keep it in a memorable place. Cover the machine to protect it and keep it clean.

Troubleshooting

Important: **It is essential that all operator safety mechanisms be connected and in proper operating condition prior to mower use.**

When a problem occurs, do not overlook the simple causes. For example: starting problems could be caused by an empty fuel tank.

The following table lists some of the common causes of trouble. Do Not attempt to service or replace major items or any items that call for special timing of adjustments procedures (such as valves, governor, etc.). Have this work done by your **Engine Service Dealer**.

Note: When disconnecting electrical connectors DO NOT pull on the wires to separate the connectors.

Problem	Possible Cause	Corrective Action
The engine overheats.	1. The engine load is excessive.	1. Reduce ground speed.
	2. The oil level in the crankcase is low.	2. Add oil to the crankcase.
	3. The cooling fins and air passages under the engine blower housing are plugged.	3. Remove the obstruction from the cooling fins and air passages.
	4. The air cleaner is dirty.	4. Clean or replace the air cleaner element.
	5. Dirt, water, or stale fuel is in fuel system.	5. Contact an Authorized Service Dealer.
The starter does not crank	1. The blade control switch is engaged.	1. Move the blade control switch to Disengaged.
	2. The motion control levers are not in the park position.	2. Move the motion control levers outward to the park position.
	3. The operator is not seated.	3. Sit on the seat.
	4. The battery is dead.	4. Charge the battery.
	5. The electrical connections are corroded or loose.	5. Check the electrical connections for good contact.
	6. A fuse is blown.	6. Replace the fuse.
	7. A relay or switch is damaged.	7. Contact an Authorized Service Dealer.
Engine will not start, starts hard, or fails to keep running	1. Fuel tank is empty.	1. Fill the fuel tank.
	2. The choke is not on.	2. Move the choke lever to On.
	3. The air cleaner is dirty.	3. Clean or replace the air cleaner element.
	4. The spark plug wire(s) is loose or disconnected.	4. Install the wire(s) on the spark plug.
	5. The spark plug(s) is pitted, fouled, or the gap is incorrect.	5. Install a new, correctly gapped spark plug(s).
	6. There is dirt in fuel filter.	6. Replace the fuel filter.
	7. Dirt, water, or stale fuel is in the fuel system.	7. Contact an Authorized Service Dealer.
	8. There is incorrect fuel in the fuel tank.	8. Drain the tank and replace the fuel with the proper type.
	9. The oil level in the crankcase is low.	9. Add oil to the crankcase.

Problem	Possible Cause	Corrective Action
Engine loses power	1. Engine load is excessive.	1. Reduce the ground speed.
	2. Air cleaner is dirty.	2. Clean or replace the air cleaner element.
	3. Oil level in the crankcase is low.	3. Add oil to the crankcase.
	4. Cooling fins and air passages for the engine are plugged.	4. Remove the obstructions from the cooling fins and air passages.
	5. The spark plug(s) is pitted, fouled, or the gap is incorrect.	5. Install a new, correctly gapped spark plug(s).
	6. Vent hole in the fuel cap is closed.	6. Open the vent in the fuel cap.
	7. Dirt in fuel filter.	7. Replace the fuel filter.
	8. Dirt, water, or stale fuel is in the fuel system.	8. Contact an Authorized Service Dealer.
	9. There is incorrect fuel in the fuel tank.	9. Drain the tank and replace the fuel with the proper type.
The machine does not drive.	1. The drive belts are worn, loose, or broken.	1. Contact an Authorized Service Dealer.
	2. The drive belts are off of the pulleys.	2. Contact an Authorized Service Dealer.
	3. The drive is in bypass mode.	3. Take machine out of bypass mode. Refer to the Pushing the Machine by Hand section.
Abnormal vibration	1. Engine mounting bolts are loose.	1. Tighten the engine mounting bolts.
	2. Loose engine pulley, idler pulley, or blade pulley.	2. Tighten the appropriate pulley.
	3. Engine pulley is damaged.	3. Contact an Authorized Service Dealer.
	4. Cutting blade(s) is/are bent or unbalanced.	4. Install new cutting blade(s).
	5. Blade is loose.	5. Tighten the blade mounting bolt and inspect the blade spring disc washers for damage (refer to the Servicing the Cutting Blades section).
	6. Blade spindle is bent.	6. Contact an Authorized Service Dealer.
Uneven cutting height.	1. Blade(s) not sharp.	1. Sharpen the blade(s).
	2. Cutting blade(s) is/are bent.	2. Install new cutting blade(s).
	3. A blade is loose.	3. Tighten the blade mounting bolt and inspect the blade spring disc washers for damage (refer to the Servicing the Cutting Blades section).
	4. Mower deck is not level.	4. Level mower deck from side-to-side and front-to-rear.
	5. An anti-scalp wheel is not set correctly	5. Adjust the anti-scalp wheel height.
	6. Underside of mower is dirty.	6. Clean the underside of the mower.
	7. Tire pressure in drive tires not correct.	7. Adjust tire pressure.
	8. Blade spindle bent.	8. Contact an Authorized Service Dealer.
Blades do not rotate.	1. Drive belt is worn, loose or broken.	1. Install new drive belt.
	2. Drive belt is off pulley.	2. Install drive belt and check adjusting shafts and belt guides for correct position.
	3. Deck belt is worn, loose or broken.	3. Install new deck belt.
	4. Deck belt is off pulley.	4. Install deck pulley and check the idler pulley, idler arm and spring for correct position and function.
	5. The mower belt is worn, loose, or broken.	5. Install a new mower belt.

Schematics

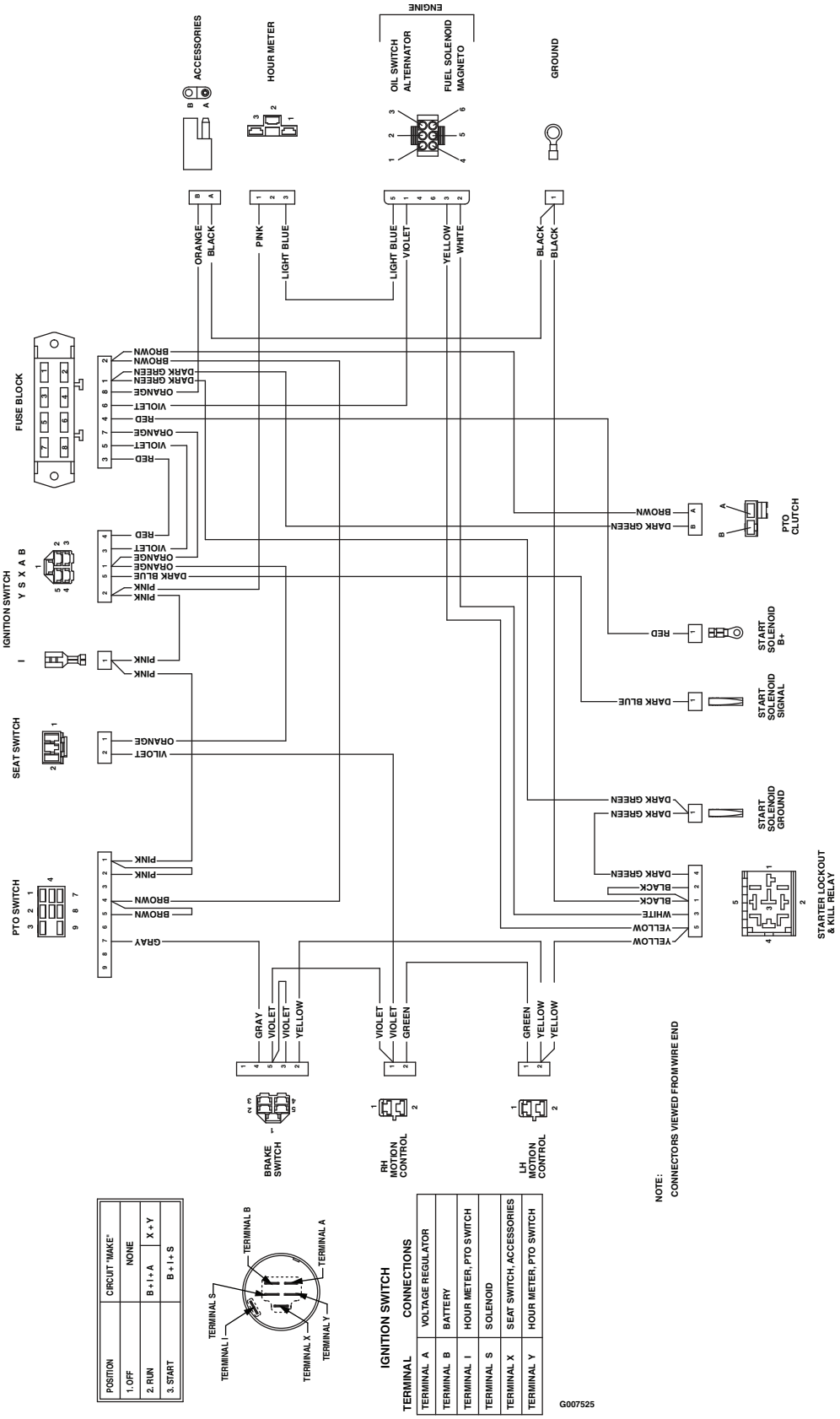

Electrical Diagram (Rev. A)

TITAN Z and TimeCutter Z Mowers

The Toro Total Coverage Guarantee

A Three-Year Limited Warranty (Limited Warranty for Commercial Use)

Conditions and Products Covered

The Toro Company and its affiliate, Toro Warranty Company, pursuant to an agreement between them, jointly promise to repair any Toro Product used for normal residential purposes* if defective in materials or workmanship. The following time periods apply from the date of purchase:

Products	Warranty Period
TITAN Z Mowers and Attachments	3 year limited warranty
TimeCutter Z Mowers and Attachments	3 year limited warranty
All Batteries	1 year limited warranty

This warranty includes the cost of parts and labor, but you must pay the cost of transportation to and from the servicing dealer.

This warranty applies to consumer TITAN Z and TimeCutter Z mowers and attachments.

* Normal residential purposes means use of the product on the same lot as your home. Use at more than one location is considered commercial use, and the commercial use warranty would apply.

Limited Warranty for Commercial Use

Toro Consumer Products and attachments used for commercial, institutional, or rental use are warranted against defects in materials or workmanship for the following time periods from the date of purchase:

Products	Warranty Period
Air Cooled Gas Engines	90 day limited warranty
All other items	30 day limited warranty

Instructions for Obtaining Warranty Service

If you think that your Toro Product contains a defect in materials or workmanship, follow this procedure:

1. Contact any Toro Authorized or Master Service Dealer to arrange service at their dealership. To locate a dealer convenient to you, refer to the Yellow Pages of your telephone directory (look under “Lawn Mowers") or access our web site at www.Toro.com. U.S. Customers may also call toll free: 866-854–9035 to use our 24-hour Toro dealer locator system.
2. Bring the product and your proof of purchase (sales receipt) to the Service Dealer.

If for any reason you are dissatisfied with the Service Dealer’s analysis or with the assistance provided, contact us at:

Customer Care Department, Consumer Division
Toro Warranty Company
8111 Lyndale Avenue South
Bloomington, MN 55420-1196
Toll Free: 866-216-6029 (U.S. customers)
Toll Free: 866-216-6030 (Canada customers)

Owner Responsibilities

You must maintain your Toro Product by following the maintenance procedures described in the *Operator’s Manual*. Such routine maintenance, whether performed by a dealer or by you, is at your expense.

Items and Conditions Not Covered

There is no other express warranty except for special emission system coverage on some products. This express warranty does not cover:

- Cost of regular maintenance service or parts, such as filters, fuel, lubricants, tune-up parts, blade sharpening, brake and clutch adjustments.
- Any product or part which has been altered or misused or required replacement or repair due to normal wear, accidents, or lack of proper maintenance.
- Repairs necessary due to improper fuel, contaminants in the fuel system, or failure to properly prepare the fuel system prior to any period of non-use over three months.
- Pickup and delivery charges to and from an Authorized Toro Service Dealer.

General Conditions

All repairs covered by this warranty must be performed by an Authorized Toro Service Dealer using Toro approved replacement parts.

Repair by an Authorized Toro Service Dealer is your sole remedy under this warranty.

Neither The Toro Company nor Toro Warranty Company is liable for indirect, incidental or consequential damages in connection with the use of the Toro Products covered by this warranty, including any cost or expense of providing substitute equipment or service during reasonable periods of malfunction or non-use pending completion of repairs under this warranty.

Some states do not allow exclusion of incidental or consequential damages, so the above exclusion and limitations may not apply to you.

This warranty gives you specific legal rights, and you may also have other rights which vary from state to state.

Countries Other than the United States or Canada

Customers who have purchased Toro products exported from the United States or Canada should contact their Toro Distributor (Dealer) to obtain guarantee policies for your country, province, or state. If for any reason you are dissatisfied with your Distributor’s service or have difficulty obtaining guarantee information, contact the Toro importer. If all other remedies fail, you may contact us at Toro Warranty Company.