Zero Turn Radius Mowers

All models

Setup Instructions

Loose Parts

Use the chart below to verify that all parts have been shipped.

Procedure	Description	Qty.	Use
7	Deflector assembly	1	Install the discharge deflector
	Rod	1	
	Spring	1	
8	Ignition Key	1	Complete the Setup.
	Hose coupling	1	
	Operator's Manual	1	
	Engine Operator's Manual	1	
	Operator Training Material	1	

Note: Determine the left and right sides of the machine from the normal operating position.

1

Checking Tire Pressure

No Parts Required

Procedure

1. Check the tire pressure in the drive tires. Proper inflation for drive tires is 13 psi (90 kPa).
2. Adjust if necessary.

2

Fastening the Seat

No Parts Required

Procedure

1. Remove the nut and bolt from the loose end of the lanyard.
2. Tilt seat downward and align lanyard to the hole in the side of the seat (Figure 1).
3. Install bolt and nut. Tighten bolt and then loosen nut 1/4-1/2 turn so that lanyard end rotates freely.

Verify that lanyard is free to rotate on both ends so that it pulls straight while supporting the seat.

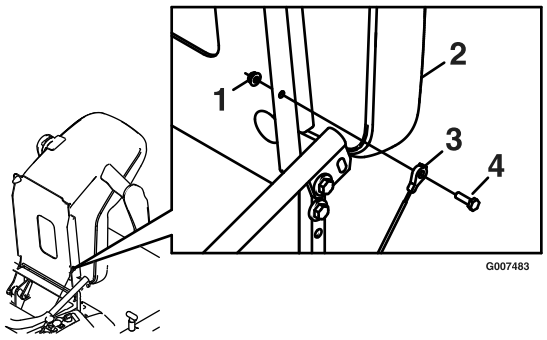

Figure 1

1. Seat assembly
2. Seat track studs
3. 5/16-18 inch whizlock nuts

 All Rights Reserved

3

Servicing the Battery

No Parts Required

Procedure

Warning

CALIFORNIA
Proposition 65 Warning

Battery posts, terminals, and related accessories contain lead and lead compounds, chemicals known to the State of California to cause cancer and reproductive harm. Wash hands after handling.

Important: The machine is shipped with a filled lead acid battery.

1. Tilt seat up to gain access to the battery.

Charging the battery may produce explosive gasses. Battery gasses can explode causing serious injury.

- **Keep sparks, flames, or cigarettes away from battery.**
- **Ventilate when charging or using battery in an enclosed space.**
- **Make sure venting path of battery is always open once battery is filled with acid.**

2. Check the voltage of the battery with a digital voltmeter. Locate the voltage reading of the battery in the table below and charge the battery for the recommended time interval to bring the charge up to a full charge of 12.6 volts or greater.

   Important: Make sure the negative battery cables are disconnected and the battery charger used for charging the battery has an output of 16 volts and 7 amps or less to avoid damaging the battery(chart for recommended charger settings).

Voltage Reading	Percent Charge	Maximum Charger Settings	Charging Interval
12.6 or greater	100%	16 volts/7 amps	No Charging Required
12.4 – 12.6	75–100%	16 volts/7 amps	30 Minutes
12.2 – 12.4	50–75%	16 volts/7 amps	1 Hour
12.0–12.2	25–50%	14.4 volts/4 amps	2 Hours
11.7–12.0	0–25%	14.4 volts/4 amps	3 Hours
11.7 or less	0%	14.4 volts/2 amps	6 Hours or More

If the ignition is in the "ON" position there is potential for sparks and engagement of components. Sparks could cause an explosion or moving parts could accidentally engage causing personal injury

Be sure ignition switch is in the "OFF" position before charging the battery.

3. Connect the negative battery cables.

   Note: If the positive cable is also disconnected, connect the **positive (red) cable** to the positive battery terminal **first**, then the negative (black) cable to the negative battery terminal. Slip insulator boot over the positive terminal.

   Note: If time does not permit charging the battery, or if charging equipment is not available, connect the negative battery cables and run the vehicle continuously for 20 to 30 minutes to sufficiently charge the battery.

4

Installing the Motion Control Levers

No Parts Required

Procedure

1. Remove the bottom 3/8 x 1 inch bolt and spring disc washer from the control arm shaft. Loosen the

upper 3/8 x 1 inch bolt and spring disc washer in the control lever so that the lever can rotate (Figure 2).

2. Position the lever so the bottom hole aligns with hole in the control arm shaft. Install spring disc washer and bolt.
3. Repeat on opposite side of unit.

   Note: There are two lever height options available. Place the levers in the top two holes to increase height of the levers, or in the bottom two holes to decrease the height of the levers.

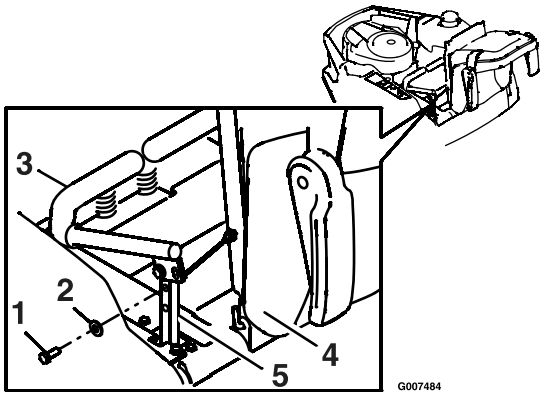

Figure 2

1. Bolt
2. Spring disc washer
3. Motion control lever
4. Seat
5. Control arm shaft

4. Align the levers front/rear position. With the levers in the neutral position, loosen the hardware and adjust the levers sliding and/or tilting the lever(s) forward or backward until properly aligned and tighten hardware (Figure 3).

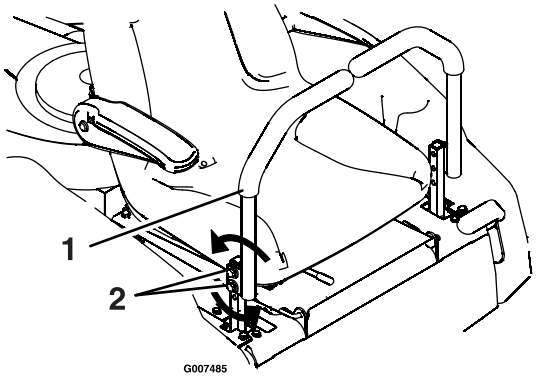

Figure 3

1. Motion control lever
2. Hardware

5. If the ends of the levers hit against each other, while in the drive position (levers rotated in as far as possible), make adjustments by moving the levers outwards to the neutral lock position and carefully bending them outward. Move them back to the drive position and check for clearance. Repeat if necessary.
6. If the machine turns right or left when handles are pushed forward together, adjust the stop on the side opposite the direction of turn (Figure 4). Loosen the screws that hold the motion control limiter stop. Move the stop back until the unit drives straight. Tighten the screws to lock the stop in place. Readjust handles if necessary.

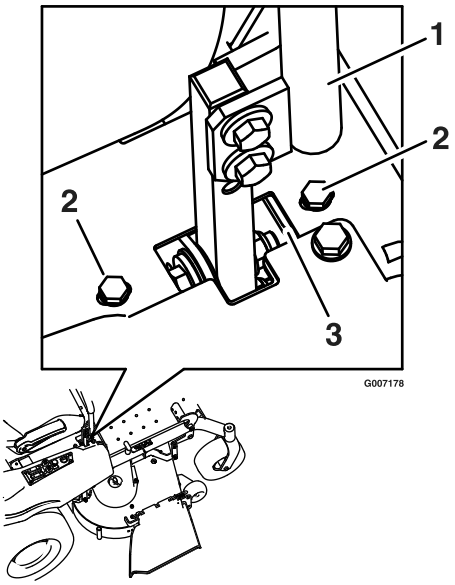

Figure 4

1. Control arm shaft
2. Limiter stop screws
3. Adjust stop

5

Servicing the Engine

No Parts Required

Procedure

Engine is shipped with oil; check oil level and if necessary fill to the appropriate level with oil as specified in Engine Owner's Manual.

6

Servicing the Hydraulic Oil

No Parts Required

Procedure

The machine is shipped with hydraulic oil. Verify level on Expansion Tank (Figure 5).

1. Start engine and drive the machine forward and backward for a few minutes to allow any extra air to purge out of the hydraulic system.
2. Stop engine and wait for all moving parts to stop. Remove key and engage parking brake.
3. Check expansion tank and if necessary add MOBIL 1 15W-50 synthetic motor oil to the FULL COLD line.

   Note: The proper amount of oil should have been added at the factory. If the reservoir is slightly over full, Do Not remove fluid. The level will go down once all of the air is purged from the system.

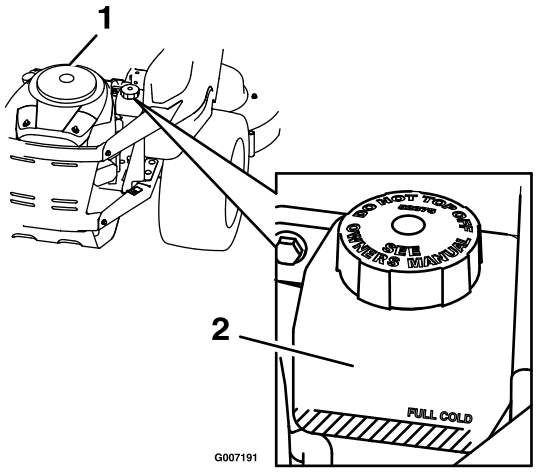

Figure 5

1. Engine
2. Expansion tank

4. Replace expansion tank cap and tighten until snug. **Do Not overtighten.**

7

Installing the Discharge Deflector

Parts needed for this procedure:

1	Deflector assembly
1	Rod
1	Spring

Procedure

1. Position the discharge deflector assembly with the bracket ends between the welded brackets on the deck as shown in Figure 6.

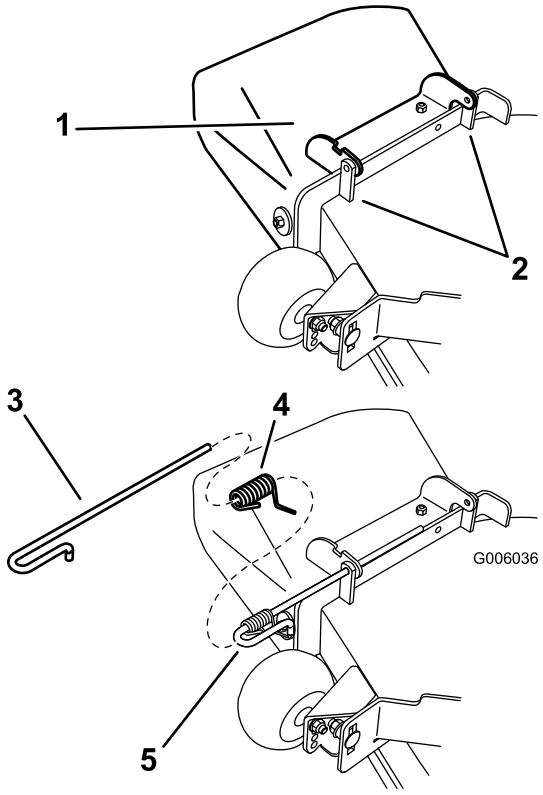

Figure 6

1. Deflector assembly
2. Deck brackets
3. Rod
4. Spring
5. Spring installed over the rod

2. Install the spring onto the straight end of the rod. Position the spring on the rod as shown in Figure 6 so the shorter spring end is coming from under the rod before the bend and going over the rod as it returns from the bend.

3. Install the spring and rod assembly through the openings in both the deck brackets and the deflector bracket (Figure 6).
4. Lift the long end of the spring and place it into the notch on the deflector assembly bracket (Figure 7).
5. Secure the rod and spring assembly by twisting it so the short end of the rod can be placed behind the front bracket welded to the deck (Figure 7).

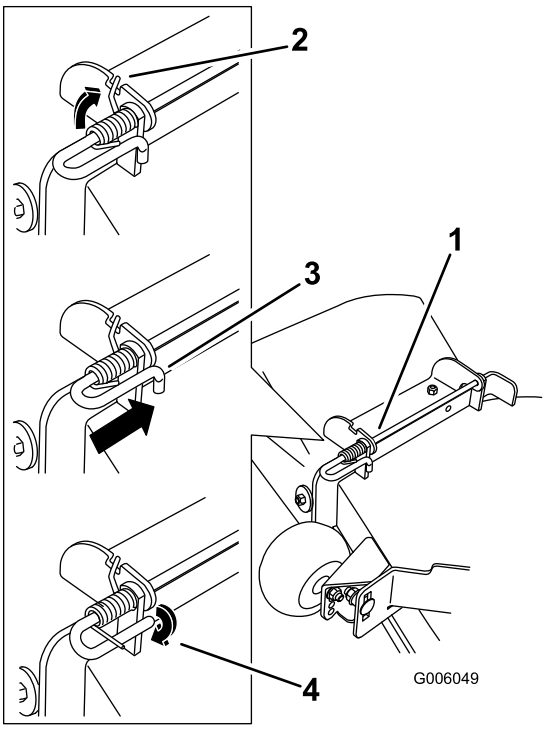

Figure 7

1. Rod and spring assembly partially installed
2. Long end of the spring installed into the notch in the deflector bracket
3. Rod, short end, moved behind mower bracket
4. Short end, retained by mower bracket.

Important: The discharge deflector must be spring loaded in the down position. Lift the deflector up to test that it snaps to the full down position.

8

Completing the Setup

Parts needed for this procedure:

1	Ignition Key
1	Hose coupling
1	*Operator's Manual*
1	Engine *Operator's Manual*
1	Operator Training Material

Checking the Mower Adjustment

The mower deck was leveled at the factory. If the mower is not cutting level, adjust the side-to-side level and the front-to-rear blade slope. See the *Operator's Manual* for the proper procedure.

Review the Remaining Parts

Keep all the following items with the machine:

- Ignition Key
- Hose coupling
- *Operator's Manual*
- *Engine Operator's Manual*
- View the Operator training material.