FORM NO. 3315–640

TORO®

MODEL NO. 30564–30001

PARTS CATALOG

62" SIDE DISCHARGE CUTTING UNIT
(For Groundsmaster 200 Series)

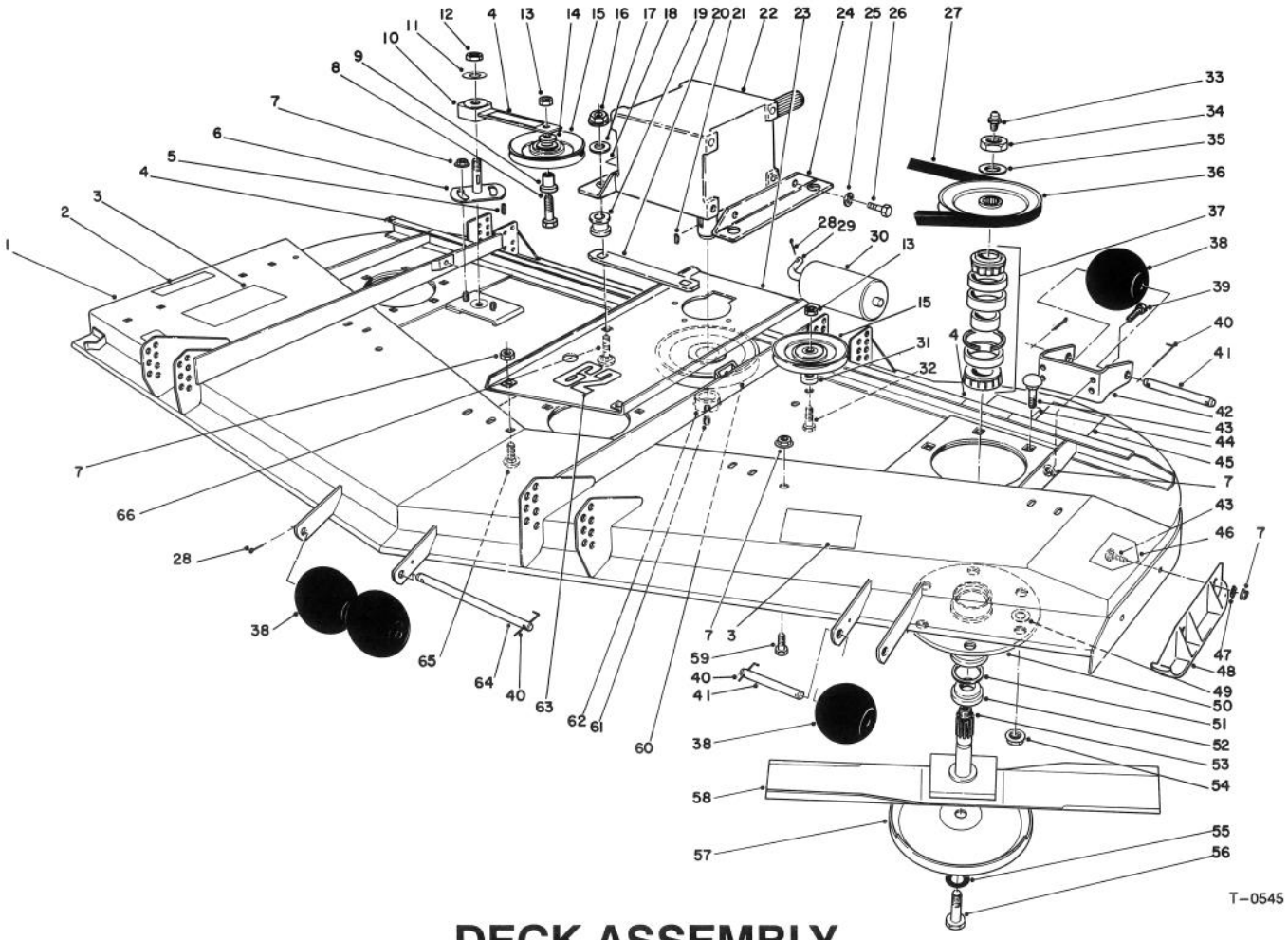

DECK ASSEMBLY

Ref. No.	Part No.	Description	No. Used
1	63–9840	Cutting Deck	1
2	66–6380	Decal – Defector Missing	1
3	66–1340	Decal – Danger	2
4	67–5360	Decal – Shield Missing	3
5	5–1077	Key – Square	1
6	44–6300	Plate – Idler	1
7	3290–357	Nut – Lock	12
8	3211–8	Screw – Cap Hex. Hd.	1
9	65–5950	Bushing – Pulley	2
10	27–8580	Idler Socket/Bushing Assy.	1
11	3256–27	Washer – Flat	1
12	3296–33	Nut – Lock	1
13	3296–5	Nut – Lock	2
14	7–0081	Washer – Special	2
15	65–5940	Pulley – Idler	2
16	32153–2	Nut – Flange	4

Ref. No.	Part No.	Description	No. Used
17	63–8410	Washer	4
18	70–2560	Decal – Lube	1
19	63–9750	Mount	4
20	68–9890	Cover –Gear Box, Front	1
21	3257–5	Key – Woodruff	1
22	68–6810	Gear Box	1
23	72–9310	Base – Gear Box	1
24	68–8560	Assy. – Bracket, Gear Box	2
25	3253–21	Washer – Lock	4
26	323–4	Screw – Cap Hex. Hd.	4
27	44–6260	V–Belt	1
28	3272–11	Pin – Cotter	5
29	40–0340	Shaft – Rear Roller	2
30	36–1740	Roller – Deck	2
31	44–6390	Spacer	1
32	3211–9	Screw – Cap Hex. Hd.	1

TPS

© The TORO Company –1992

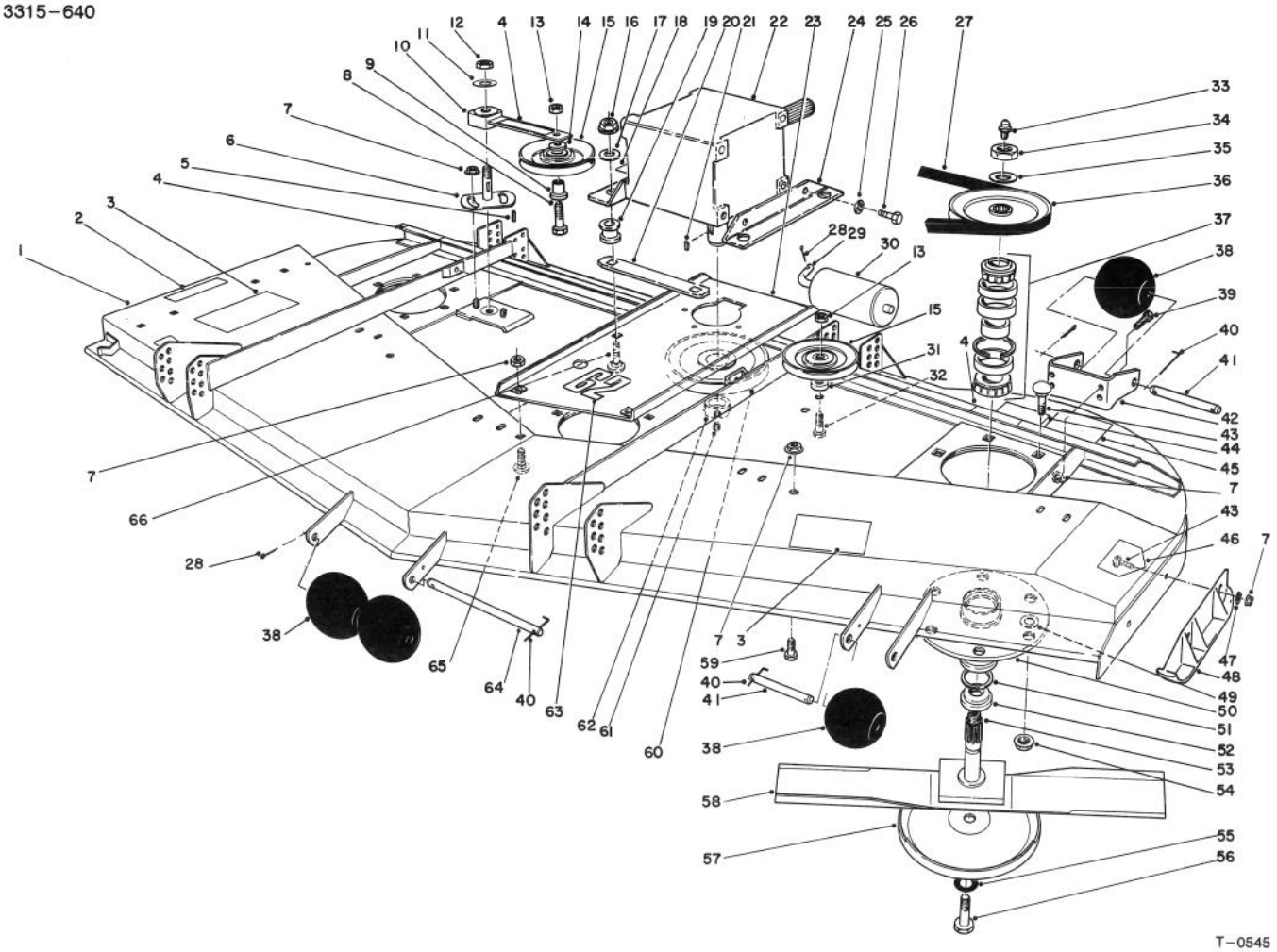

DECK ASSEMBLY (Continued)

Ref. No.	Part No.	Description	No. Used
33	302–2	Fitting – Grease	3
34	32146–20	Nut – Jam	3
35	7–4150	Washer	3
36	44–6340	Pulley – Hub Spindle	3
37	46–8530	Assembly – Bearing	3
38	29–4820	Roller	4
39	323–6	Screw – Cap Hex. Hd.	2
40	57–0690	Pin – Cotter, Special	3
41	57–0680	Shaft – Short	2
42	57–0580	Bracket – Roller, Left Rear	1
43	3231–22	Bolt – Carriage, Short Neck	20
44	68–8340	Decal – Blade Bolt Torque	1
45	68–7260	Decal – Rear Weight 35#	1
46	43–8480	Decal – Danger	1
47	3290–224	Washer – Pyramidal	4
48	57–0570	Skid – L.H.	1
49	3256–24	Washer – Flat	18
50	61–4160	Housing – Spindle	3
51	253–139	Seal	6

Ref. No.	Part No.	Description	No. Used
52	27–0950	Spacer	3
53	27–0920	Spindle – Shaft	3
54	32128–21	Nut – Flange	18
55	67–5770	Washer – Lock	3
56	44–2200	Screw – Cap, Blade	3
57	72–9361	Cup – Anti–Scalp	3
58	44–6250	Blade	3
59	323–4	Screw – Cap Hex. Hd.	2
60	63–9900	Pulley – Gear Box	1
61	3245–9	Screw – Set, Socket Hd.	2
62	27–6140	Bushing – Taper Lock (Incl. Ref. #61)	1
63	66–1630	Decal – 62	1
64	40–6400	Shaft – Long	1
65	3231–27	Bolt – Carriage	4
66	3231–26	Bolt – Carriage	4
*	44–6370	Spindle Assembly (Incl. Ref. #33–37 & 50–53)	3

*Not Illustrated

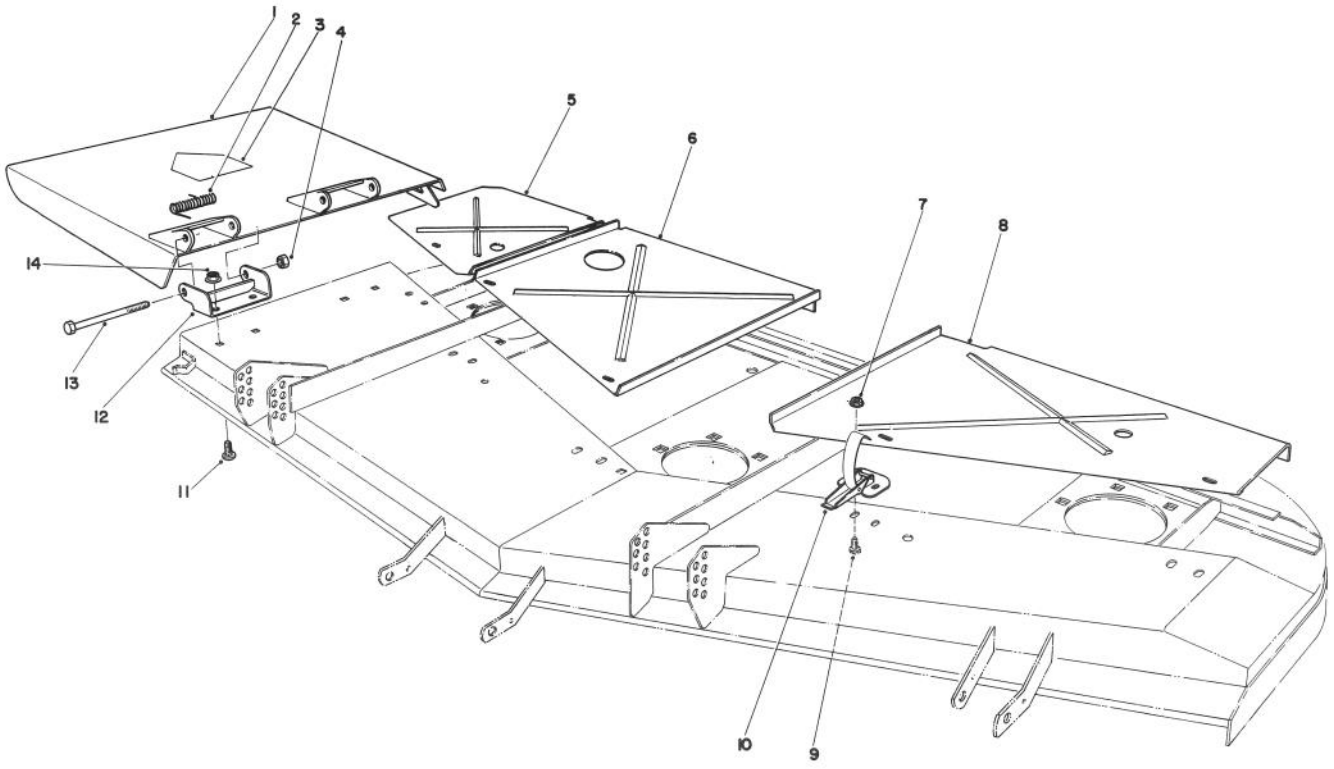

T–0560

COVER & DEFLECTOR ASSEMBLY

Ref. No.	Part No.	Description	No. Used
1	14–0909	Deflector (Incl. Ref. #3)	1
2	51–1550	Spring	2
3	43–8480	Decal – Danger	1
4	32153–5	Nut – Lock	2
5	63–9830	Cover – Deck R.H.	1
6	72–9320	Cover – Deck Center	1
7	32128–17	Nut – Flange	10
8	44–6290	Cover – Deck L.H.	1
9	3290–321	Screw – Hex. Slotted Hd.	10
10	249–21	Latch – Draw	5
11	3231–27	Bolt – Carriage	4
12	51–1530	Bracket – Hinge	2
13	325–17	Screw – Cap Hex. Hd.	2
14	3290–357	Nut – Lock	4

3315–640

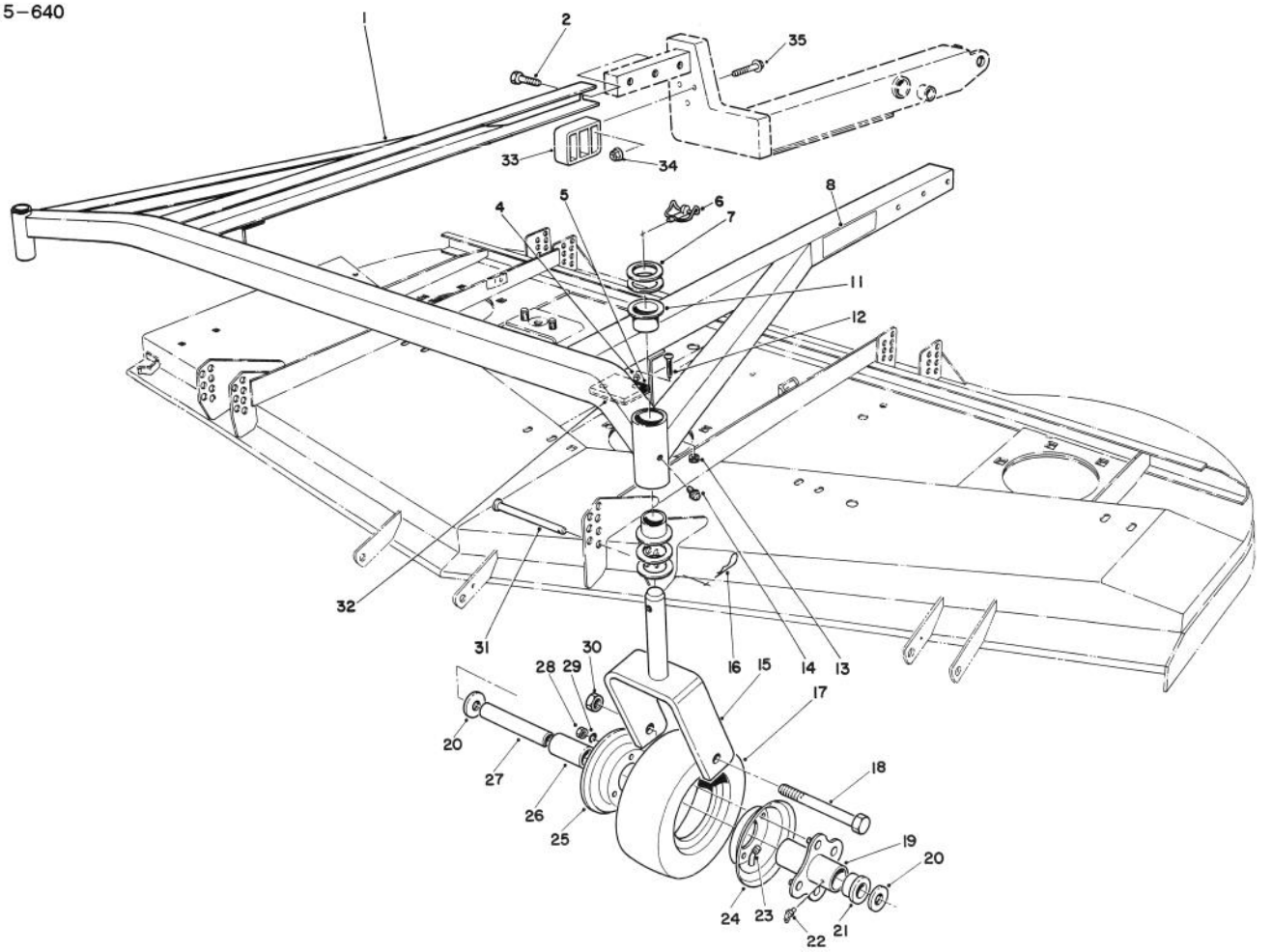

T–1251

CARRIER FRAME ASSEMBLY

Ref. No.	Part No.	Description	No. Used
1	83–4560	Frame (Incl. Ref. #9 & 10)	1
2	325–32	Screw – Cap Hex. Hd.	6
4	40–9520	Spacer – Split	4
5	40–0330	Cushion – Rubber	2
6	3290–384	Pin – Lynch	2
7	3–6781	Washer – Thrust	8
8	68–8360	Decal – H.O.C.	1
11	28–9290	Bushing – Special	4
12	32122–28	Screw – Mach. Truss Hd.	4
13	3296–2	Nut – Lock	4
14	302–5	Fitting – Grease	2
15	68–8900	Fork – Castor, Front	2
16	3290–355	Pin – Hair, Cotter	4
17	68–8960	Tire	2
18	325–19	Screw – Cap Hex. Hd.	2
19	68–8940	Hub – Center	2
20	3256–6	Washer – Flat	4

Ref. No.	Part No.	Description	No. Used
21	62–5580	Bushing	4
22	302–61	Fitting – Grease	2
23	68–8950	Tube – w/Valve	2
24	68–8920	Wheel Half – Female	2
25	68–8930	Wheel Half – Male	2
26	62–5570	Bearing – Roller	2
27	68–8980	Bushing – Spanner	2
28	3217–6	Nut – Hex.	8
29	3253–4	Washer – Lock	8
30	32153–5	Nut – Lock	2
31	283–55	Pin – Clevis	4
32	42–6200	Shim – Cushion	3
33	83–4520	Cradle – Rear	2
34	32128–40	Nut – Flange	6
35	3234–19	Screw – Flange Hd.	6
*	13–3869	Assembly – Caster Wheel (Incl. Ref. #17, 19, 21–26 & 28–29)	2

*Not Illustrated

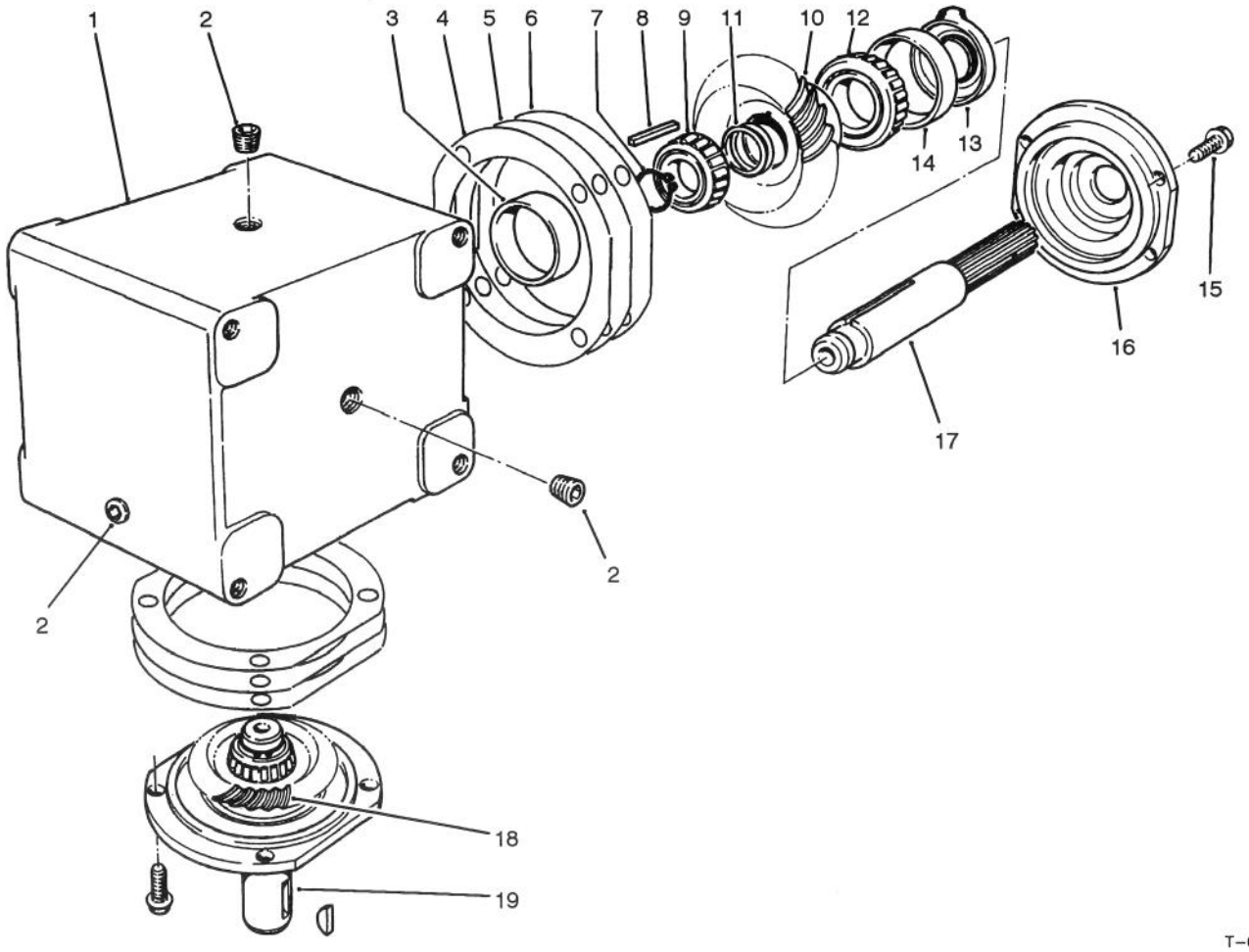

T–0977

GEAR BOX ASSEMBLY NO. 68–6810

Ref. No.	Part No.	Description	No. Used
1	68–7030	Housing	1
2	62–3490	Plug – Pipe (Solid)	4
3	62–3360	Cup – Bearing	2
4	62–3420	Gasket (.015 in.)	A/R
5	62–3430	Gasket (.005 in.)	A/R
6	62–3440	Gasket (.003 in.)	A/R
7	68–7070	Ring – Retaining	2
8	62–3380	Key	2
9	62–3370	Cone – Bearing	2
10	68–7080	Gear	1

Ref. No.	Part No.	Description	No. Used
11	72–9370	Shim (.020 in.)	4
12	62–3330	Cone – Gear	1
13	62–3400	Seal	2
14	62–3340	Cup – Bearing	2
15	62–3310	Screw – Cap	8
16	62–3410	Cap	2
17	68–7040	Shaft	1
18	68–7060	Gear	1
19	68–7050	Shaft	1

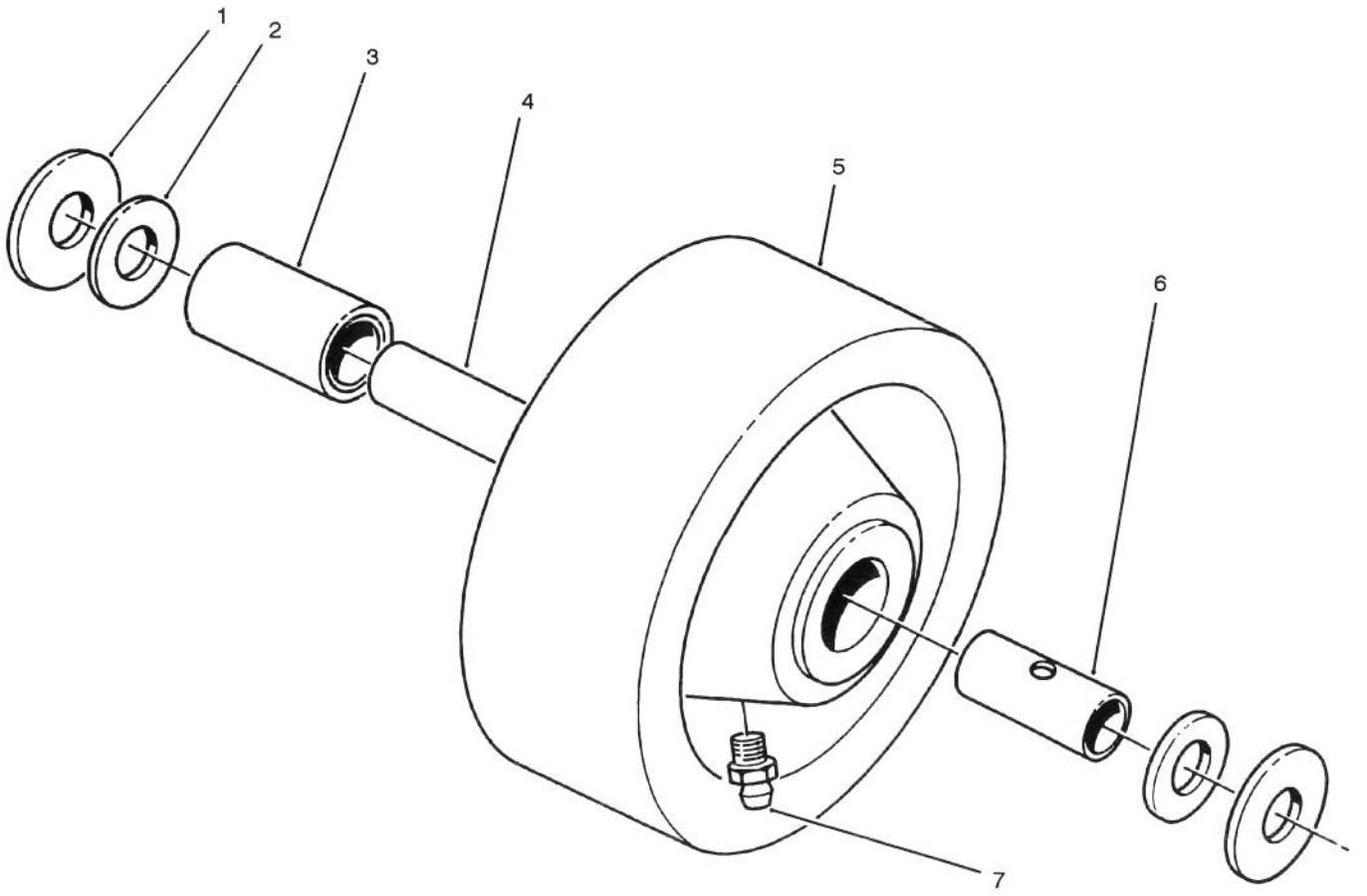

T–0633

PHENOLIC WHEEL ASSEMBLY NO. 27–1050 (Optional)

Ref. No.	Part No.	Description	No. Used
1	27–1170	Washer – Thrust	2
2	27–1180	Retainer – Bearing	2
3	27–121 0	Bearing – Roller	1
†4	68–8980	Bushing – Spanner	1
5	27–1190	Wheel – Caster	1
6	27–1200	Bushing – Spanner	1
7	302–55	Fitting – Grease	1

†Must be ordered separately for use with 1/2" bolt.

TORO PART NUMBER INDEX

Part No.	Description	Page No.	Ref. No.	Qty
3–6781	Washer – Thrust	4	7	8
5–1077	Key – Square	1	5	1
7–0081	Washer – Special	1	14	2
7–4150	Washer	2	35	3
13–3869	Assembly – Caster Wheel	4	*	2
14–0909	Deflector	3	1	1
27–1210	Bearing – Roller	6	3	1
27–0920	Spindle – Shaft	2	53	3
27–0950	Spacer	2	52	3
27–1170	Washer – Thrust	6	1	2
27–1180	Retainer – Bearing	6	2	2
27–1190	Wheel – Caster	6	5	1
27–1200	Bushing – Spanner	6	6	1
27–6140	Bushing – Taper Lock	2	62	1
27–8580	Assy. – Idler Socket/Bushing	1	10	1
28–9290	Bushing – Special	4	11	4
29–4820	Roller	2	38	4
36–1740	Roller – Deck	1	30	2
40–0330	Cushion – Rubber	4	5	2
40–0340	Shaft – Rear Roller	1	29	2
40–6400	Shaft – Long	2	64	1
40–9520	Spacer – Split	4	4	4
42–6200	Shim – Cushion	4	32	3
43–8480	Decal – Danger	3	3	1
43–8480	Decal – Danger	2	46	1
44–2200	Screw – Cap, Blade	2	56	3
44–6250	Blade	2	58	3
44–6260	V–Belt	1	27	1
44–6290	Cover – Deck L.H.	3	8	1
44–6300	Plate – Idler	1	6	1
44–6340	Pulley – Hub Spindle	2	36	3
44–6370	Assembly – Spindle	2	*	3
44–6390	Spacer	1	31	1
46–8530	Assembly – Bearing	2	37	3
51–1530	Bracket – Hinge	3	12	2
51–1550	Spring	3	2	2
57–0570	Skid – L.H.	2	48	1
57–0580	Bracket – Roller, Left Rear	2	42	1
57–0680	Shaft – Short	2	41	2
57–0690	Pin – Cotter, Special	2	40	3
61–4160	Housing – Spindle	2	50	3
62–3310	Screw – Cap	5	15	8
62–3330	Cone – Gear	5	12	1
62–3340	Cup – Bearing	5	14	2
62–3360	Cup – Bearing	5	3	2
62–3370	Cone – Bearing	5	9	2
62–3380	Key	5	8	2
62–3400	Seal	5	13	2
62–3410	Cap	5	16	2
62–3420	Gasket (.015 in.)	5	4	A/R
62–3430	Gasket (.005 in.)	5	5	A/R
62–3440	Gasket (.003 in.)	5	6	A/R
62–3490	Plug – Pipe (Solid)	5	2	4
62–5570	Bearing – Roller	4	26	2
62–5580	Bushing	4	21	4
63–8410	Washer	1	17	4
63–9750	Mount	1	19	4
63–9830	Cover – Deck R.H.	3	5	1
63–9840	Cutting Deck	1	1	1
63–9900	Pulley – Gear Box	2	60	1
65–5940	Pulley – Idler	1	15	2
65–5950	Bushing – Pulley	1	9	2
66–1340	Decal – Danger	1	3	2
66–1630	Decal – 62	2	63	1
66–6380	Decal – Defector Missing	1	2	1
67–5360	Decal – Shield Missing	1	4	3
67–5770	Washer – Lock	2	55	3
68–6810	Gear Box	1	22	1
68–7030	Housing	5	1	1
68–7040	Shaft	5	17	1
68–7050	Shaft	5	19	1
68–7060	Gear	5	18	1
68–7070	Ring – Retaining	5	7	2
68–7080	Gear	5	10	1
68–7260	Decal – Rear Weight 35#	2	45	1
68–8340	Decal – Blade Bolt Torque	2	44	1
68–8360	Decal – H.O.C.	4	8	1
68–8560	Assy. – Bracket, Gear Box	1	24	2
68–8900	Fork – Castor, Front	4	15	2
68–8920	Wheel Half – Female	4	24	2
68–8930	Wheel Half – Male	4	25	2
68–8940	Hub – Center	4	19	2
68–8950	Tube – w/Valve	4	23	2
68–8960	Tire	4	17	2
68–8980	Bushing – Spanner	6	4	1
68–8980	Bushing – Spanner	4	27	2
68–9890	Cover –Gear Box, Front	1	20	1
70–2560	Decal – Lube	1	18	1
72–9310	Base – Gear Box	1	23	1
72–9320	Cover – Deck Center	3	6	1
72–9361	Cup – Anti–Scalp	2	57	3
72–9370	Shim (.020 in.)	5	11	4
83–4520	Cradle – Rear	4	33	2
83–4560	Frame	4	1	1
249–21	Latch – Draw	3	10	5
253–139	Seal	2	51	6
283–55	Pin – Clevis	4	31	4
302–2	Fitting – Grease	2	33	3
302–5	Fitting – Grease	4	14	2
302–55	Fitting – Grease	6	7	1
302–61	Fitting – Grease	4	22	2
323–4	Screw – Cap Hex. Hd.	1	26	4
323–4	Screw – Cap Hex. Hd.	2	59	2
323–6	Screw – Cap Hex. Hd.	2	39	2
325–17	Screw – Cap Hex. Hd.	3	13	2
325–19	Screw – Cap Hex. Hd.	4	18	2
325–32	Screw – Cap Hex. Hd.	4	2	6
3211–8	Screw – Cap Hex. Hd.	1	8	1
3211–9	Screw – Cap Hex. Hd.	1	32	1
3217–6	Nut – Hex.	4	28	8
3231–22	Bolt – Carriage, Short Neck	2	43	20
3231–26	Bolt – Carriage	2	66	4
3231–27	Bolt – Carriage	3	11	4
3231–27	Bolt – Carriage	2	65	4
3234–19	Screw – Flange Hd.	4	35	6
3245–9	Screw – Set, Socket Hd.	2	61	2
3253–4	Washer – Lock	4	29	8
3253–21	Washer – Lock	1	25	4
3256–6	Washer – Flat	4	20	4
3256–24	Washer – Flat	2	49	18
3256–27	Washer – Flat	1	11	1
3257–5	Key – Woodruff	1	21	1
3272–11	Pin – Cotter	1	28	5
3290–224	Washer – Pyramidal	2	47	4
3290–321	Screw – Hex. Slotted Hd.	3	9	10
3290–355	Pin – Hair, Cotter	4	16	4
3290–357	Nut – Lock	1	7	12
3290–357	Nut – Lock	3	14	4
3290–384	Pin – Lynch	4	6	2
3296–2	Nut – Lock	4	13	4
3296–5	Nut – Lock	1	13	2
3296–33	Nut – Lock	1	12	1
32122–28	Screw – Mach. Truss Hd.	4	12	4
32128–17	Nut – Flange	3	7	10
32128–21	Nut – Flange	2	54	18
32128–40	Nut – Flange	4	34	6
32146–20	Nut – Jam	2	34	3
32153–2	Nut – Flange	1	16	4
32153–5	Nut – Lock	3	4	2
32153–5	Nut – Lock	4	30	2

PRODUCT CHANGES

In an effort to make improvements available to TORO owners as quickly as possible, minor changes are incorporated into Toro's products from time to time that do not become immediately shown in the Parts Catalog. If such a change has been made in your unit, which is not reflected in your manual, see your TORO Distributor or his Authorized TORO Service Dealer for information and part numbers.

COUNTRIES OTHER THAN THE UNITED STATES OR CANADA

Customers who have purchased TORO products exported from the United States or Canada should contact their Toro Distributor (Dealer) to obtain guarantee policies for your country, province or state. If for any reason you are dissatisfied with your Distributor's service or have difficulty obtaining guarantee information, contact the TORO importer. If all other remedies fail, you may contact us at The Toro Company.

MAINTENANCE RECORD

Date								

Litho in U.S.A.