Form No. 3359-878 Rev A

48cm Recycler® Lawn Mower

Model No. 20817—Serial No. 280000001 and Up

Operator's Manual

Introduction

Read this information carefully to learn how to operate and maintain your product properly and to avoid injury and product damage. You are responsible for operating the product properly and safely.

You may contact Toro directly at www.Toro.com for product and accessory information, help finding a dealer, or to register your product.

Whenever you need service, genuine Toro parts, or additional information, contact an Authorized Service Dealer or Toro Customer Service and have the model and serial numbers of your product ready. Figure 1 identifies the location of the model and serial numbers on the product.

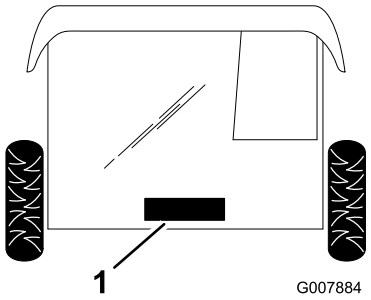

Figure 1
Under the Rear Door

1. Model and serial number plate

Write the product model and serial numbers in the space below:

Model No. _____

Serial No. _____

This manual identifies potential hazards and has safety messages identified by the safety alert symbol (Figure 2), which signals a hazard that may cause serious injury or death if you do not follow the recommended precautions.



Figure 2

1. Safety alert symbol

This manual uses 2 words to highlight information. **Important** calls attention to special mechanical information and **Note** emphasizes general information worthy of special attention.

For models with stated engine horsepower, the gross horsepower of the engine was laboratory rated by the engine manufacturer in accordance with SAE J1940. As configured to meet safety, emission, and operating requirements, the actual engine horsepower on this class of lawn mower will be significantly lower.

Safety

Improperly using or maintaining this mower can result in injury. To reduce the potential for injury, comply with these safety instructions.

Toro designed and tested this mower for reasonably safe service; however, failure to comply with the following instructions may result in personal injury.

To ensure maximum safety, best performance, and to gain knowledge of the product, it is essential that you and any other operator of the mower read and understand the contents of this manual before the engine is ever started. Pay particular attention to the safety alert symbol (Figure 2) which means Caution, Warning, or Danger—"personal safety instruction." Read and understand the instruction because it has to do with safety. Failure to comply with the instruction may result in personal injury.

© 2008—The Toro® Company
8111 Lyndale Avenue South
Bloomington, MN 55420

Register at www.Toro.com.

CE

Original Instructions (EN)
Printed in the USA
All Rights Reserved

General Lawn Mower Safety

The following instructions have been adapted from EN 836.

This cutting machine is capable of amputating hands and feet and throwing objects. Failure to observe the following safety instructions could result in serious injury or death.

Training

- Read the instructions carefully. Be familiar with the controls and the proper use of the equipment.
- Never allow children or people unfamiliar with these instructions to use the mower. Local regulations can restrict the age of the operator.
- Keep in mind that the operator or user is responsible for accidents or hazards occurring to other people or their property.
- Understand explanations for all pictograms used on the mower or in the instructions.

Gasoline

WARNING—Gasoline is highly flammable. Take the following precautions.

- Store fuel in containers specifically designed for this purpose.
- Refuel outdoors only and do not smoke while refueling.
- Add fuel before starting the engine. Never remove the cap of the fuel tank or add gasoline while the engine is running or when the engine is hot.
- If gasoline is spilled, do not attempt to start the engine but move the mower away from the area of spillage and avoid creating any source of ignition until gasoline vapors have dissipated.
- Replace all fuel tank and container caps securely.

Preparation

- While mowing, always wear substantial footwear and long trousers. Do not operate the equipment when barefoot or wearing open sandals.
- Thoroughly inspect the area where the equipment is to be used and remove all stones, sticks, wires, bones and other foreign objects.
- Before using, always visually inspect to see that guards, and safety devices, such as deflectors and/or grass catchers, are in place and working correctly.
- Before using, always visually inspect to see that the blades, blade bolts and cutter assembly are not worn or damaged. Replace worn or damaged blades and bolts in sets to preserve balance.

Starting

- Disengage all blade and drive clutches and shift into neutral before starting the engine.
- Do not tilt mower when starting the engine or switching on the motor, unless the mower has to be tilted for starting. In this case, do not tilt it more than absolutely necessary and lift only the part, which is away from the operator.
- Start the engine or switch on the motor carefully according to instructions and with feet well away from the blade(s) and not in front of the discharge chute.

Operation

- Never mow while people, especially children, or pets are nearby.
- Mow only in daylight or in good artificial light.
- Stay alert for holes in the terrain and other hidden hazards.
- Do not put hands or feet near or under rotating parts. Keep clear of the discharge opening at all times.
- Never pick up or carry a lawn mower while the engine is running.
- Use extreme caution when reversing or pulling a pedestrian controlled lawn mower towards you.
- Walk, never run.
- Slopes:
  - Do not mow excessively steep slopes.
  - Exercise extreme caution when on slopes.
  - Mow across the face of slopes, never up and down and exercise extreme caution when changing direction on slopes.
  - Always be sure of your footing on slopes.
- Stop the blade if the lawn mower has to be tilted for transportation when crossing surfaces other than grass and when transporting the lawn mower to and from the area to be mowed.
- Do not operate the engine in a confined space where dangerous carbon monoxide fumes can collect.
- Stop the engine
  - whenever you leave the lawn mower.
  - before refueling.
  - before removing the grass catcher.

  - before making height adjustment unless adjustment can be made from the operator's position.
- Stop the engine and disconnect the spark-plug wire.
  - before clearing blockages or unclogging chute.
  - before checking, cleaning or working on the lawn mower.
  - after striking a foreign object, inspect the lawn mower for damage and make repairs before restarting and operating the lawn mower.
  - if lawn mower starts to vibrate abnormally (check immediately).
- Watch out for traffic when crossing or near roadways.

Maintenance and Storage

- Keep all nuts, bolts and screws tight to be sure the equipment is in safe working condition.
- Do not use pressure cleaning equipment on machine.
- Never store the equipment with gasoline in the tank and inside a building where fumes can reach an open flame or spark.
- Allow the engine to cool before storing in any enclosure.
- To reduce the fire hazard, keep the engine, silencer, battery compartment and gasoline storage area free of grass, leaves, or excessive grease.
- Check grass catcher components and the discharge guard frequently and replace with manufacturer's recommended parts, when necessary.
- Replace worn or damaged parts for safety.
- Replace faulty silencers.
- If the fuel tank has to be drained, do this outdoors.
- Do not change the engine governor settings or overspeed the engine. Operating an engine at excessive speed can increase the hazard of personal injury.
- On multibladed lawn mowers, take care as rotating one blade may cause others to rotate.
- Be careful during adjustment of the lawn mower to prevent entrapment of the fingers between moving blades and fixed parts of the lawn mower.
- **To ensure the best performance and safety, purchase only genuine Toro replacement parts and accessories. Do not use *will fit* parts and accessories; they may cause a safety hazard.**

Sound Pressure

This unit has a maximum sound pressure level at the operator's ear of 84 dBA, based on measurements of identical machines per EN 836 and ISO 11201.

Sound Power

This unit has a guaranteed sound power level of 98 dBA, based on measurements of identical machines per ISO 11094.

Vibration, Hand/arm

This unit does not exceed a hand/arm vibration level of 7.4 m/s^2, based on measurements of identical machines per EN 836 and EN 1033.

Safety and Instructional Decals

Important: **Safety and instruction decals are located near areas of potential danger. Replace damaged decals.**

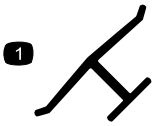

Manufacturer's Mark

1. Indicates the blade is identified as a part from the original machine manufacturer.

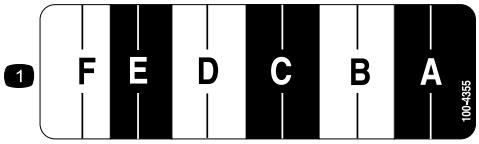

100-4355

1. Cutting height settings

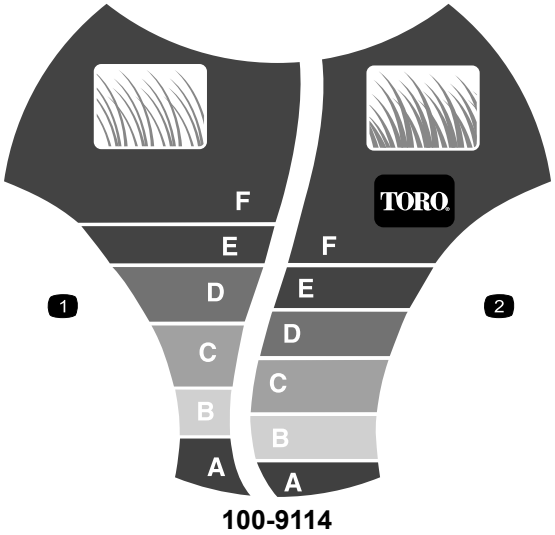

100-9114

1. Height of cut—sparse/normal grass
2. Height of cut—lush grass

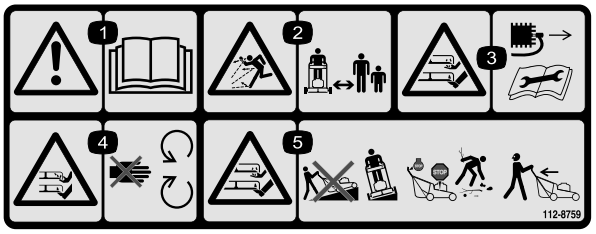

112-8759

1. Warning—read the *Operator's Manual*.
2. Thrown object hazard—keep bystanders a safe distance from the machine.
3. Cutting/dismemberment hazard of hand or foot, mower blade—remove the wire from the spark plug, and read the instructions before servicing or performing maintenance.
4. Cutting/dismemberment hazard of hand or foot, mower blade—stay away from moving parts.
5. Cutting/dismemberment hazard of hand or foot, mower blade—do not operate up and down slopes; operate side to side on slopes; stop the engine before leaving the operating position; and look behind you when backing.

Setup

Loose Parts

Use the chart below to verify that all parts have been shipped.

Procedure	Description	Qty.	Use
1.	No parts required	–	Unpack the lawn mower.
2.	No parts required	–	Install the handle.
3.	No parts required	–	Install the starter rope.
4.	No parts required	–	Adjust the handle height.
5.	No parts required	–	Assemble the grass bag.
6.	No parts required	–	Fill the engine with oil.

Note: Determine the left and right sides of the machine from the normal operating position.

1. Unpacking the Lawn Mower

Procedure

1. Carefully remove the lawn mower from the box.

Folding or unfolding the handle improperly can pinch, stretch, or damage one or more of the cables. Any pinched, stretched, or damaged cable may cause an operational failure that results in an unsafe operating condition.

- **Do not pinch, stretch, or damage the cables.**
- **Handle the cables with care when folding or unfolding the handle.**
- **Do not use the lawn mower if one or more of the cables are pinched, stretched, or damaged. Contact an Authorized Service Dealer.**

2. Lay the upper handle on the ground behind the lawn mower with the handle label facing up.

2. Installing the Handle

Procedure

1. Loosen the handle height adjustment knobs and rotate the lower handle toward the rear of the lawn mower until it seats into one of the handle height settings as shown in Figure 3. To set the handle height, refer to Adjusting the Handle Height.

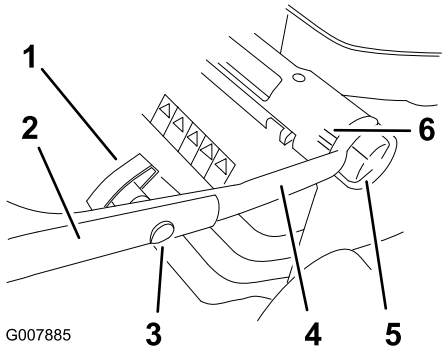

Figure 3

1. Handle knob
2. Upper handle section
3. Oval-head bolt
4. Lower handle section
5. Handle height adjustment knob (2)
6. Handle height settings

2. Remove the handle knobs and the oval-head bolts from the upper handle section.
3. Install the upper handle section onto the lower handle section with the oval-head bolts and the

handle knobs as shown in Figure 3. **Tighten the handle knobs securely.**

Note: Ensure that the cables are routed as illustrated in Figure 4.

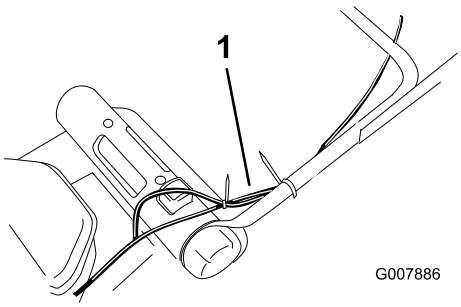

Figure 4

1. Cables

3. Installing the Starter Rope

Procedure

Pull the starter rope through the rope guide on the handle (Figure 5).

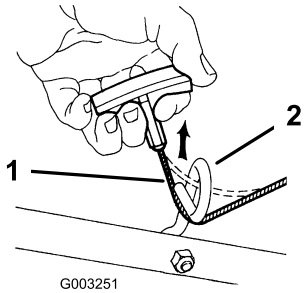

Figure 5

1. Starter rope
2. Rope guide

4. Adjusting the Handle Height

Procedure

You can set the handle to 3 height settings: high, medium, and low (Figure 3). Select the handle height setting most comfortable for you.

1. Loosen the handle height adjustment knobs.
2. Set the handle to the desired position.
3. Tighten the handle height adjustment knobs.

5. Assembling the Grass Bag

Procedure

1. Attach the two side channels of the grass bag to the grass bag frame as shown in (Figure 6).

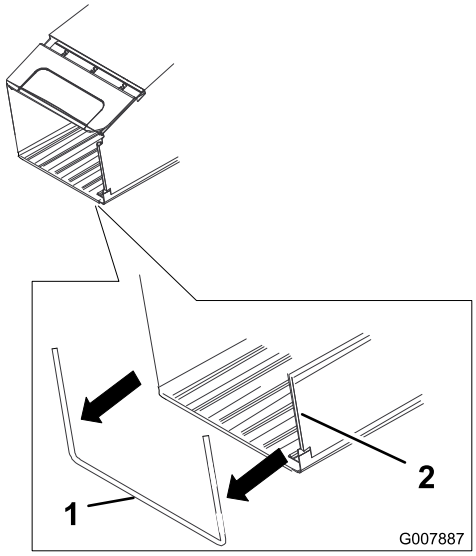

Figure 6

1. Grass bag frame
2. Side channel

Note: Start on one end of the channel and push it onto the frame.

2. Ensure that the sides of the bag base are **inside** the bag frame as shown in (Figure 7).

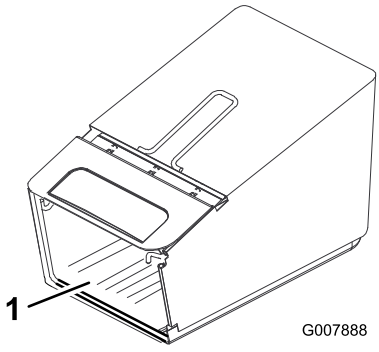

Figure 7

1. Bag base

6. Filling the Engine with Oil

Procedure

Important: Your mower does not come with oil in the engine.

1. Remove the dipstick (Figure 8).

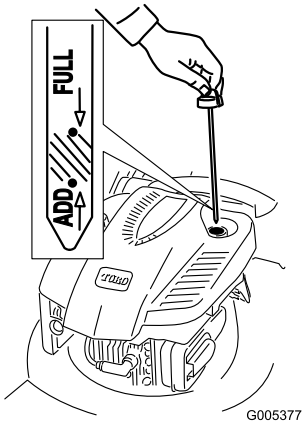

Figure 8

2. **Slowly** pour oil into the oil fill tube until the oil level reaches the **Full** mark on the dipstick (Figure 8). **Do not overfill.** (Max. fill: 0.59 l, type: SAE 30 detergent oil with an API service classification of SF, SG, SH, SJ, SL, or higher.)
3. Install the dipstick securely.

   Important: *Change the engine oil after the first 5 operating hours*; change it yearly thereafter. Refer to Changing the Engine Oil.

Product Overview

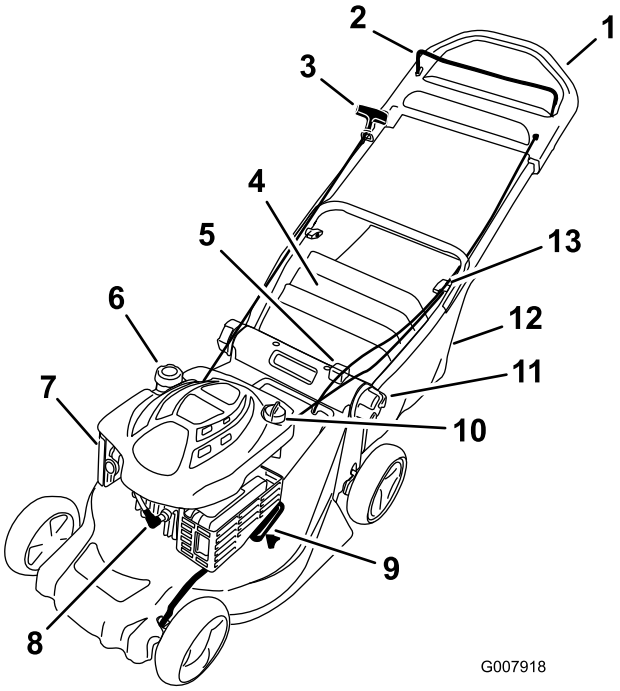

Figure 9

1. Upper handle
2. Blade control bar
3. Recoil start handle
4. Rear door
5. Cutting height adjustment button
6. Fuel tank cap
7. Air filter
8. Spark plug
9. Cutting height setting
10. Oil fill/Dipstick
11. Handle height adjustment knob (2)
12. Grass bag
13. Handle knob (2)

Operation

Note: Determine the left and right sides of the machine from the normal operating position.

Each time before you mow, ensure that the self-propel drive and the blade control bar operate properly. When you release the blade control bar, the engine and the self-propel drive should stop. If the do not, contact an Authorized Service Dealer.

Filling the Fuel Tank

Gasoline is extremely flammable and explosive. A fire or explosion from gasoline can burn you and others.

- **To prevent a static charge from igniting the gasoline, place the container and/or mower directly on the ground before filling, not in a vehicle or on an object.**
- **Fill the tank outdoors when the engine is cold. Wipe up spills.**
- **Do not handle gasoline when smoking or around an open flame or sparks.**
- **Store gasoline in an approved fuel container, out of the reach of children.**

Fill the fuel tank with fresh unleaded regular gasoline from a major name-brand service station (Figure 10).

Important: To reduce starting problems, add fuel stabilizer to the fuel all season, mixing it with gasoline less than 30 days old.

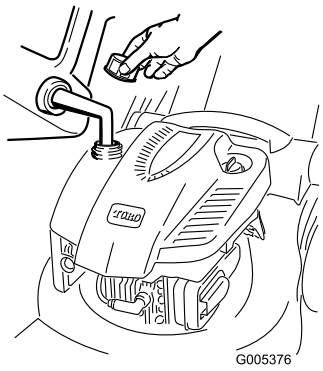

Figure 10

Checking the Engine Oil Level

Service Interval: Before each use or daily—Check the engine oil level.

1. Remove the dipstick, wipe it clean, and fully install the dipstick (Figure 11).

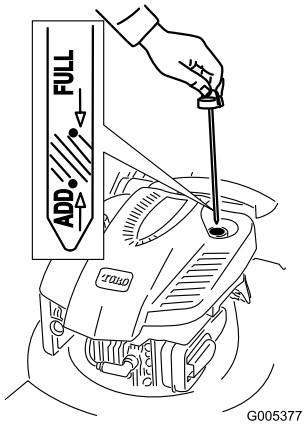

Figure 11

2. Remove the dipstick and check the oil level (Figure 11). If the oil level is below the **Add** mark on the dipstick, **slowly** pour oil into the oil fill tube to raise the oil level to the **Full** mark on the dipstick. **Do not overfill.** (Max. fill: 0.59 l, type: SAE 30 detergent oil with an API service classification of SF, SG, SH, SJ, SL, or higher.)
3. Install the dipstick.

Starting the Engine

1. Hold the blade control bar against the handle (Figure 12).

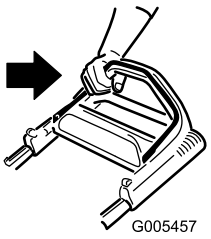

Figure 12

2. Pull the recoil starter (Figure 13).

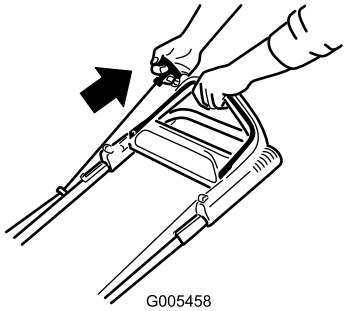

Figure 13

Note: If the mower still does not start, contact an Authorized Service Dealer.

Using the Self-propel Drive

To operate the self-propel drive, simply walk with your hands on the upper handle and your elbows at your sides, and the mower will automatically keep pace with you (Figure 14).

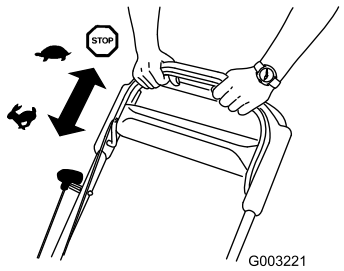

Figure 14

Stopping the Engine

Release the blade control bar (Figure 15).

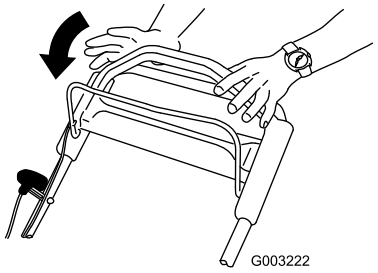

Figure 15

Important: When you release the blade control bar, both the engine and blade should stop within 3 seconds. If they do not stop properly, stop using your mower immediately and contact an Authorized Service Dealer.

Adjusting the Cutting Height

The SmartWheel® has 2 cutting scales—Sparse/Normal and Lush—to ensure the best cutting height setting in any mowing condition (Figure 16).

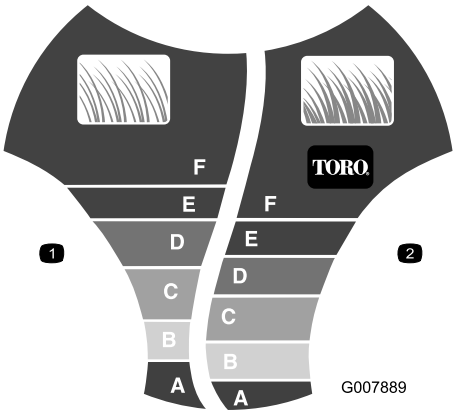

Figure 16

1. Height of cut—sparse/normal grass
2. Height of cut—lush grass

Use the Sparse/Normal scale during the warm summer season for the majority of your mowing. The Lush scale is for thick, moist, and succulent grass that grows most often in the spring.

Toro recommends the following:

- Cut the grass at the D, E, or F settings or keep the grass between 5 and 8 cm high.
- Do not cut below the D setting unless the grass is sparse or it is late fall when grass growth begins to slow down. When you cut long grass, use a higher cutting height setting and walk slower; then cut the grass again at a normal setting. Mowing the grass when it is too long can plug the lawn mower and cause the engine to stall.

Note: The SmartWheel calculates the proper setting to ensure that you cut no more than a third of the grass blade (Figure 16).

1. Stop the engine and wait for all moving parts to stop.
2. Move the lawn mower into the grass; stop moving the lawn mower when the SmartWheel design is upright (Figure 16).
3. Use the SmartWheel design to compare the tips of the grass blades to the letters on the wheel. The letter on the SmartWheel that matches the tips of the grass blades is the proper cutting height.
4. Press down on the cutting height adjustment button and hold the cutting height adjustment handle to move the cutting height up or down (Figure 17).

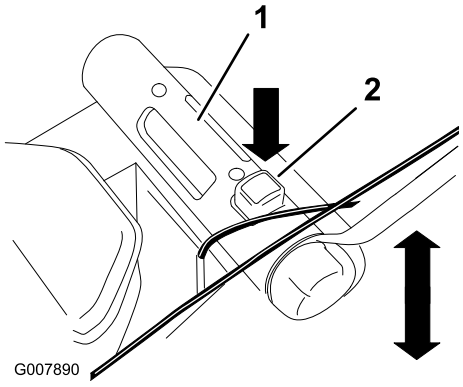

Figure 17

1. Cutting height adjustment handle
2. Cutting height adjustment button

5. Lift up or press down on the handle, and use the pointer and the cutting height setting on the link rod to set the lawn mower to the desired cutting height (Figure 18).

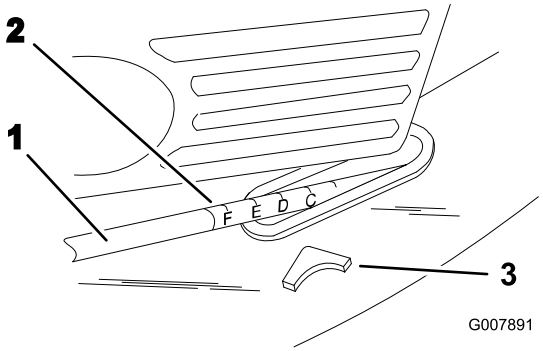

Figure 18

1. Link rod
2. Cutting height setting
3. Pointer

Using the Grass Bag

Occasionally, you may want to use the grass bag for bagging lush grass or collecting leaves.

Installing the Grass Bag

1. Stop the engine and wait for all moving parts to stop.
2. Open the rear door and hold it up.
3. Remove the recycler plug (Figure 19).

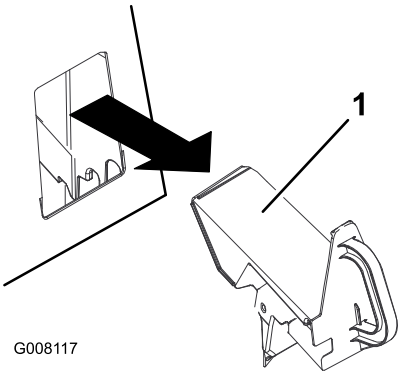

Figure 19

1. Recycler plug

4. Hang the grass bag frame pins onto the hooks as shown in Figure 20.

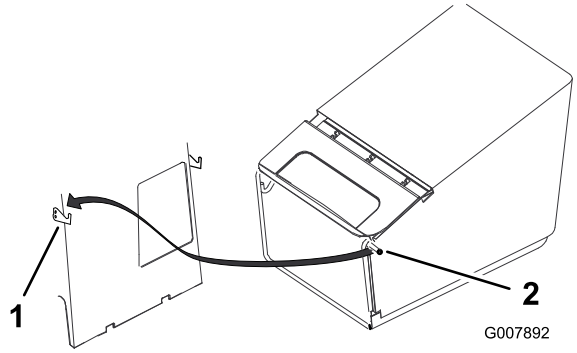

Figure 20

1. Hook (2)
2. Grass bag frame pin (2)

5. Release the rear door.

Mowing with the Grass Bag

A worn grass bag could allow debris to be thrown and result in serious personal injury or death to the operator or bystanders.

Check the grass bag frequently. If it is damaged, install a new Toro replacement bag.

Removing the Grass Bag

1. Stop the engine and wait for all moving parts to stop.

If the rear door does not close completely, the lawn mower could throw objects, causing serious personal injury or death.

If you cannot close the rear door because the grass clippings clog the discharge area, stop the engine, wait for all moving parts to stop, and remove the grass clippings (with a stick, not your hand) until the rear door closes completely.

2. Open the rear door and hold it up.
3. Lift the grass bag frame pins off the hooks and out of the opening.

Installing the Recycler Plug

1. Stop the engine and wait for all moving parts to stop.
2. Open the rear door and hold it up.
3. Insert the recycler plug into the opening as shown in Figure 21.

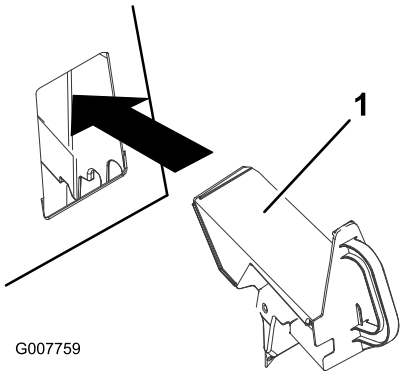

Figure 21

1. Recycler plug

4. Release the rear door.

Rear Discharging the Grass Clippings

Occasionally, you may need to cut the lawn without the grass bag or the recycler plug when the grass is too long for bagging.

To use the rear discharge feature, remove the recycler plug or the grass bag (refer to Removing the Grass Bag), and close the rear door.

If the rear door does not close completely, the lawn mower could throw objects, causing serious personal injury or death.

If you cannot close the rear door because the grass clippings clog the discharge area, stop the engine, wait for all moving parts to stop, and remove the grass clippings (with a stick, not your hand) until the rear door closes completely.

Operating Tips

General Mowing Tips

- Clear the area of sticks, stones, wire, branches, and other debris that the blade could hit.
- Avoid striking solid objects with the blade. Never deliberately mow over any object.
- If the mower strikes an object or starts to vibrate, immediately stop the engine, disconnect the wire from the spark plug, and examine the mower for damage.
- For best performance, install a new blade before the cutting season begins.
- Replace the blade when necessary with a Toro replacement blade.

Cutting Grass

- Grass grows at different rates at different times of the year. In the summer heat, it is best to cut grass at the D, E, or F (52, 63, or 75 mm) cutting height settings. Cut only about a third of the grass blade at a time. Do not cut below the D (52 mm) setting unless the grass is sparse or it is late fall when grass growth begins to slow down.
- When cutting grass over 15 cm tall, mow at the highest cutting height setting and walk slower; then mow again at a lower setting for the best lawn

appearance. If the grass is too long, the mower may plug and cause the engine to stall.

- Mow only dry grass or leaves. Wet grass and leaves tend to clump on the yard and can cause the mower to plug or the engine to stall.

Wet grass or leaves can cause serious injury if you slip and contact the blade. Mow only in dry conditions.

- Alternate the mowing direction. This helps disperse the clippings over the lawn for even fertilization.
- If the finished lawn appearance is unsatisfactory, try one or more of the following:
  - Replace the blade or have it sharpened.
  - Walk at a slower pace while mowing.
  - Raise the cutting height on your mower.
  - Cut the grass more frequently.
  - Overlap cutting swaths instead of cutting a full swath with each pass.
  - Set the cutting height on the front wheels one notch lower than the rear wheels. For example, set the front wheels at D (52 mm) and the rear wheels at E (63 mm).

Cutting Leaves

- After cutting the lawn, ensure that half of the lawn shows through the cut leaf cover. You may need to make more than one pass over the leaves.
- If there are more than 13 cm of leaves on the lawn, set the front cutting height one or two notches higher than the rear cutting height.
- Slow down your mowing speed if the mower does not cut the leaves finely enough.

Maintenance

Note: Determine the left and right sides of the machine from the normal operating position.

Recommended Maintenance Schedule(s)

Maintenance Service Interval	Maintenance Procedure
After the first 5 hours	• Change the engine oil.
Before each use or daily	• Check the engine oil level. • Ensure that the engine stops within 3 seconds after releasing the blade control bar.
Every 25 hours	• Check the spark plug. • Lubricate the self-propel drive. • Replace the blade or have it sharpened (more frequently if the edge dulls quickly).
Every 50 hours	• Change the engine oil.
Every 100 hours	• Clean the cooling system (refer to your engine owner's manual). • Replace the spark plug (refer to your engine owner's manual). • Clean the cooling system.
Before storage	• Empty the fuel tank before repairs as directed and before annual storage.
Yearly	• Replace the air filter (more frequently in dusty operating conditions). • Check the spark plug (refer to your engine owner's manual). • Refer to your Engine Operator's Manual for any additional yearly maintenance procedures.

Important: **Refer to your *Engine Operator's Manual* for additional maintenance procedures.**

Preparing for Maintenance

1. Stop the engine and wait for all moving parts to stop.
2. Disconnect the spark plug wire from the spark plug (Figure 22) before performing any maintenance procedure.

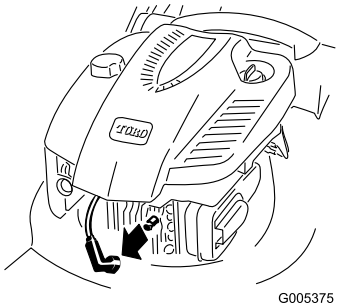

Figure 22

3. After performing the maintenance procedure(s), connect the spark plug wire to the spark plug.

Important: Before tipping the mower to change the oil or replace the blade, allow the fuel tank to run dry through normal usage. If you must tip the mower prior to running out of fuel, use a hand fuel pump to remove the fuel. Always tip the mower onto its side with the air filter up.

Tipping the mower may cause the fuel to leak. Gasoline is flammable, explosive and can cause personal injury.

Run the engine dry or remove the gasoline with a hand pump; never siphon.

Cleaning under the Housing

Keep the underside of the housing clean. Be especially careful to keep the kickers free of debris (Figure 23).

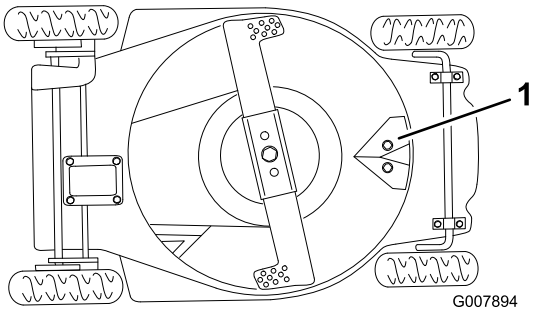

Figure 23

1. Kicker plate

Washing Method

1. With the engine off, move the lawn mower onto a flat surface near a garden hose.
2. Attach a quick disconnect coupling (sold separately) to the end of the garden hose.
3. Lift the rear door and attach the coupling to the lawn mower washout fitting on the recycling plug (Figure 24).

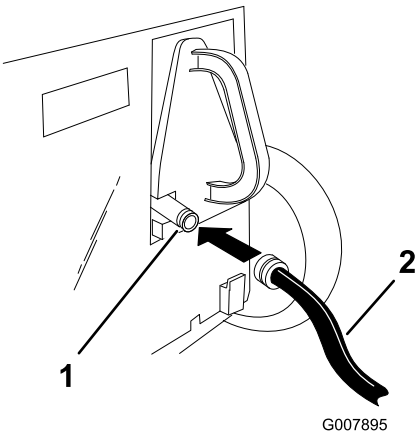

Figure 24

1. Washout fitting
2. Hose

4. Turn the water on high.
5. Start the engine.
6. Let the lawn mower run for 2 minutes.
7. Stop the engine and wait for all moving parts to stop.
8. Turn the water off.
9. Remove the coupling from the washout fitting.
10. Start the lawn mower and let it run for 1 minute to dry out the lawn mower and its components.

If the underside of the housing has excessive grass buildup, repeat steps 2 through 8 above and do the following:

1. Let the lawn mower soak for 30 minutes.
2. Turn the water on high again.
3. Run the lawn mower for another 2 minutes.
4. Stop the engine and wait for all moving parts to stop.

A broken or missing washout fitting could expose you and others to thrown objects or to the blade, causing injury or death.

- **Replace a broken or missing washout fitting immediately before using the lawn mower again.**
- **Plug any hole(s) in the lawn mower with bolts and locknuts.**
- **Never put your hands or feet under the lawn mower or through openings in the lawn mower.**

Scraping Method

If washing does not remove all the debris from under the housing, tip the lawn mower and scrape it clean.

1. Disconnect the wire from the spark plug.
2. Drain the gasoline from the fuel tank. Refer to Emptying the Fuel Tank.
3. Remove the grass bag.
4. Tip the lawn mower onto its left side.
5. Remove the dirt and grass clippings with a hardwood or plastic scraper. Avoid burrs and sharp edges.

   Important: Move the blade as little as possible to avoid future starting problems.
6. Turn the lawn mower upright.
7. Fill the fuel tank.
8. Connect the wire to the spark plug.

Replacing the Air Filter

Service Interval: Yearly—Replace the air filter (more frequently in dusty operating conditions).

1. Perform the pre-maintenance procedures; refer to Preparing for Maintenance.
2. Open the air filter cover and remove the old air filter (Figure 25).

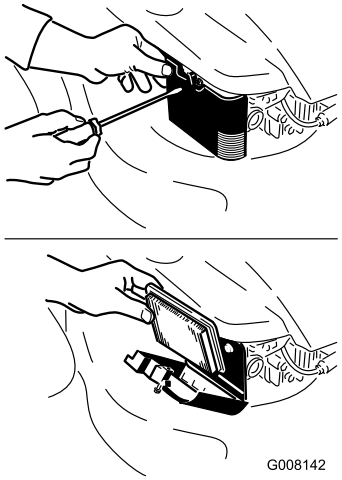

Figure 25

3. Install a new air filter and the air filter cover.

Servicing the Spark Plug

Service Interval: Every 25 hours—Check the spark plug.

Use a Champion RJ19LM spark plug or equivalent.

1. Stop the engine and wait for all moving parts to stop.
2. Disconnect the wire from the spark plug.
3. Clean around the spark plug.
4. Remove the spark plug from the cylinder head.

   Important: Replace a cracked, fouled, or dirty spark plug. Do not clean the electrodes because grit entering the cylinder can cause engine damage.
5. Set the gap on the new plug to 0.030 in. (0.76 mm) (Figure 26).

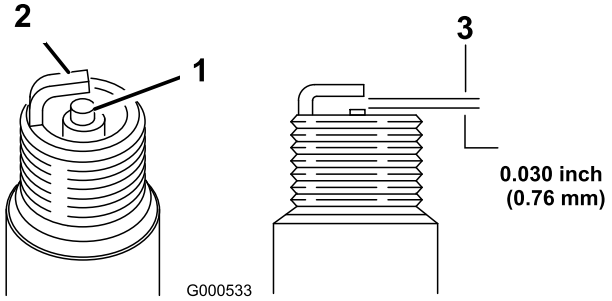

Figure 26

1. Center electrode insulator
2. Side electrode
3. Air gap (not to scale)

6. Install the spark plug and the gasket seal.
7. Torque the spark plug to 15 ft-lb (20 N-m).
8. Connect the wire to the spark plug.

Adjusting the Self-propel Drive Cable

If the top speed begins to slow on the lawn mower, adjust the self-propel drive cable.

1. Stop the engine and wait for all moving parts to stop.
2. Pull the upper handle back as far as possible (Figure 27).

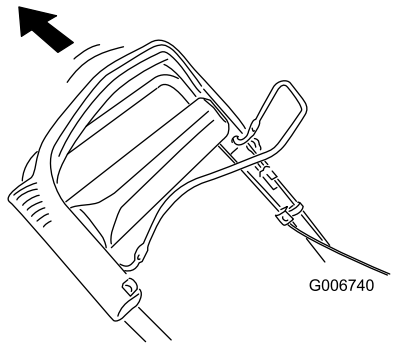

Figure 27

3. Loosen the nut on the cable mount (Figure 28).

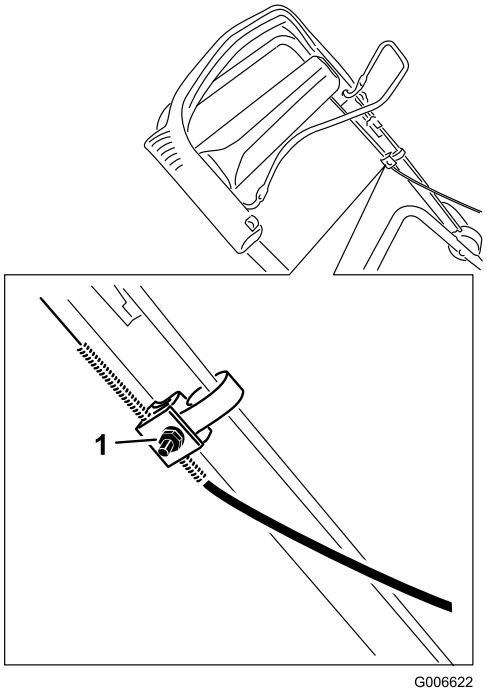

Figure 28

1. Nut on cable mount

4. Remove the belt cover.
5. Push the belt guide tab down until it contacts the lawn mower, then hold it in place (Figure 29).

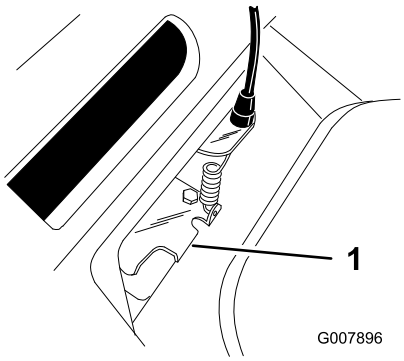

Figure 29

1. Belt guide tab

6. Pull the cable jacket down (toward the lawn mower) to remove all the slack in the cable (Figure 30).

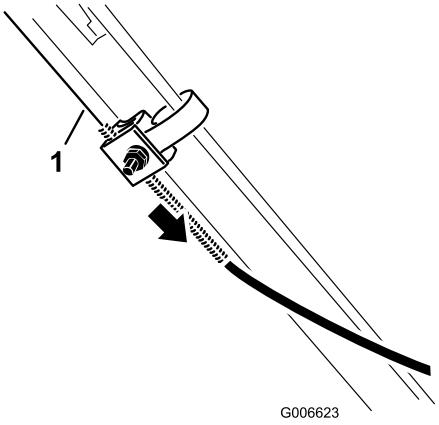

Figure 30

1. Cable

7. While holding the cable jacket down, release the drive bracket and tighten the nut on the cable mount.
8. Install the belt cover.

Lubricating the Self-propel Drive

Service Interval: Every 25 hours

1. Wipe the grease fittings with a clean rag (Figure 31).

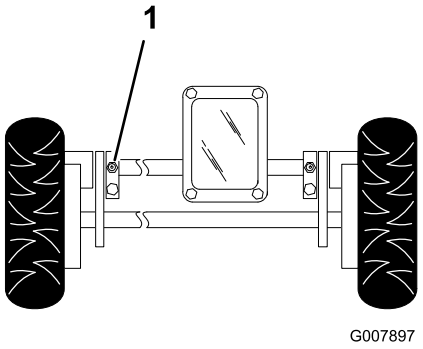

Figure 31

1. Grease fitting

2. Install a grease gun onto each fitting and gently apply 2 or 3 pumps of #2 multi-purpose lithium base grease.

Important: Applying grease using excess pressure may damage the seals.

Changing the Engine Oil

Service Interval: After the first 5 hours

Every 50 hours

Run the engine a few minutes before changing the oil to warm it. Warm oil flows better and carries more contaminants.

1. Perform the pre-maintenance procedures; refer to Preparing for Maintenance.
2. If the grass bag is on the mower, remove it.
3. Drain the gasoline from the fuel tank; refer to Emptying the Fuel Tank.
4. Remove the dipstick from oil fill tube and place a drain pan next to the **left** side of the lawn mower (Figure 11).
5. Tip the mower onto its **left** side (with the air filter up) to allow the used oil to drain out through the oil fill tube (Figure 32).

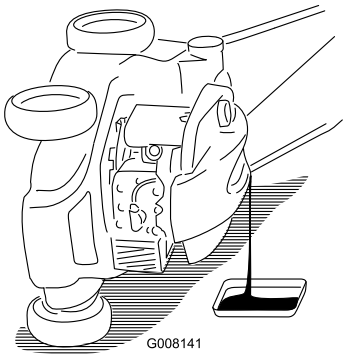

Figure 32

6. After draining the oil, return the mower to its operating position.
7. **Slowly** pour fresh oil into the oil fill tube until the oil level reaches the **Full** mark on the dipstick (Figure 11). **Do not overfill.** (Max. fill: 0.59 l, type: SAE 30 detergent oil with an API service classification of SF, SG, SH, SJ, SL, or higher.)
8. Install the dipstick securely.
9. Wipe up any spilled oil.
10. Connect the wire to the spark plug.
11. Dispose of the used oil properly at a local recycling center.

Maintaining the Blade

Service Interval: Before each use or daily

Every 25 hours—Replace the blade or have it sharpened (more frequently if the edge dulls quickly).

A straight, sharp blade provides maximum cutting performance. Regularly inspect and sharpen the blade.

Important: ***You will need a torque wrench to install the blade properly.*** **If you do not have a torque wrench or are uncomfortable performing this procedure, contact an Authorized Service Dealer.**

Examine the blade whenever you run out of gasoline. If the blade is damaged or cracked, replace it immediately. If the blade edge is dull or nicked, have it sharpened or replace it.

The blade is sharp; contacting the blade can result in serious personal injury.

Wear gloves when servicing the blade.

1. Drain the gasoline from the fuel tank. Refer to Emptying the Fuel Tank.
2. Tip the lawn mower onto its **left** side (Figure 33).

Important: Move the blade as little as possible to avoid future starting problems.

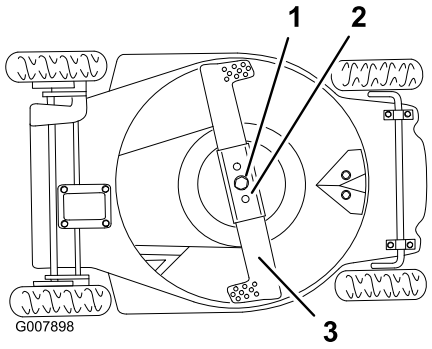

Figure 33

1. Blade bolt and lock washer
2. Blade stiffener
3. Blade

Inspecting the Blade

Carefully examine the blade for sharpness and wear, especially where the flat and the curved parts meet (Figure 34). Because sand and abrasive material can wear away the metal that connects the flat and curved parts of the blade, check the blade before using the lawn mower. If you notice a slot or wear (Figure 34), replace the blade; refer to Removing the Blade.

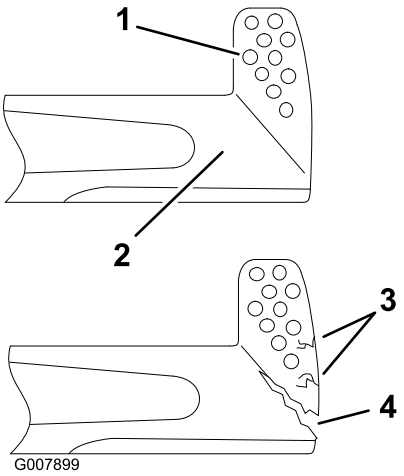

Figure 34

1. Sail
2. Flat part of blade
3. Wear
4. Slot formed

Note: For the best performance, install a new Toro blade before the cutting season begins. During the year, file down any small nicks to maintain the cutting edge.

A worn or damaged blade can break, and a piece of the blade could be thrown into the operator's or bystander's area, resulting in serious personal injury or death.

- **Inspect the blade periodically for wear or damage.**
- **Replace a worn or damaged blade.**

Removing the Blade

Operating the lawn mower without the blade stiffener in place can cause the blade to flex, bend, or break, resulting in serious injury or death to the operator or bystanders.

Do not operate the lawn mower without the blade stiffener.

1. Grasp the end of the blade using a rag or a thickly padded glove.
2. Remove the blade bolt, the lock washer, the blade, and the blade stiffener (Figure 33).

Note: Turn the blade bolt counterclockwise to loosen it.

Sharpening the Blade

File the top side of the blade to maintain its original cutting angle (Figure 35) and inner cutting edge radius (Figure 35). The blade will remain balanced if you remove the same amount of material from both cutting edges.

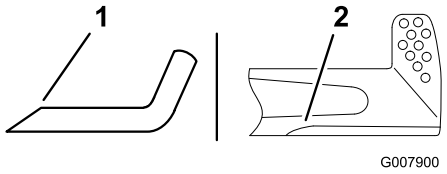

Figure 35

1. Sharpen at this angle only
2. Maintain the original radius here

Balancing the Blade

1. Check the balance of the blade by placing the center hole of the blade over a nail or a screwdriver shank clamped horizontally in a vise (Figure 36).

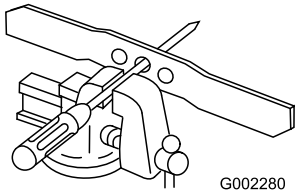

Figure 36

Note: You can also check the balance by using a commercially manufactured blade balancer.

2. If either end of the blade rotates downward, file that end (not the cutting edge or the end near the cutting edge). The blade is properly balanced when neither end drops.

Installing the Blade

1. Install a sharp, balanced Toro blade, the blade stiffener, the lock washer, and the blade bolt.

   Note: The sail part of the blade must point upward (toward the top of the housing).

2. Torque the blade bolt to 45 to 60 ft-lb (33 to 44 N-m).

Cleaning under the Belt Cover

Keep the area under the belt cover free of debris.

1. Stop the engine and wait for all moving parts to stop.
2. Lift off the cover and brush out all the debris from the belt area.
3. Install the belt cover.

Cleaning the Cooling System

Service Interval: Every 100 hours

Clean the dirt and the chaff from the cylinder, the cylinder head fins, and around the carburetor and the linkage. Remove debris from the air intake slots on the recoil housing. This will ensure proper cooling and the best engine performance.

Emptying the Fuel Tank

1. Stop the engine and wait for it to cool down
2. Disconnect the wire from the spark plug.
3. Remove the cap from the fuel tank.
4. Use a hand pump to syphon the fuel into a clean approved gasoline container.
5. Connect the wire to the spark plug.
6. Run the engine until it stops.
7. Start the engine again to make sure that all the gasoline is out of the carburetor.

Folding the Handle

Folding or unfolding the handle improperly can pinch, stretch, or damage one or more of the cables. Any pinched, stretched, or damaged cable may cause an operational failure that results in an unsafe operating condition.

- **Do not pinch, stretch, or damage the cables.**
- **Handle the cables with care when folding or unfolding the handle.**
- **Do not use the lawn mower if one or more of the cables are pinched, stretched, or damaged. Contact an Authorized Service Dealer.**

1. Loosen the handle height adjustment knobs that secure the handle to the lawn mower.
2. Loosen the knobs that secure the upper handle section to the lower handle section.
3. Carefully swing the lower handle section forward until it rests on the engine (Figure 37).

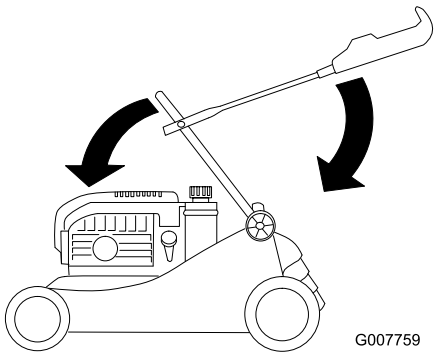

Figure 37

4. Carefully swing the upper handle section rearward until it rests flat (Figure 37).

Storage

Store the mower in a cool, clean, dry place.

Preparing the Mower for Storage

Gasoline vapors can explode.

- **Do not store gasoline more than 30 days.**
- **Do not store the mower in an enclosure near an open flame.**
- **Allow the engine to cool before storing it.**

1. On the last refueling of the year, add fuel stabilizer to the fuel as directed by the engine manufacturer.
2. Run the mower until the engine stops from running out of fuel.
3. Prime the engine and start it again.
4. Allow the engine to run until it stops. When you can no longer start the engine, it is sufficiently dry.
5. Disconnect the wire from the spark plug.
6. Remove the spark plug, add 30 ml of oil through the spark plug hole, and pull the starter rope slowly several times to distribute oil throughout the cylinder to prevent cylinder corrosion during the off-season.
7. Loosely install the spark plug.
8. Tighten all nuts, bolts, and screws.

Removing the Mower from Storage

1. Remove the spark plug and spin the engine rapidly using the starter to blow the excess oil from the cylinder.
2. Install the spark plug and tighten it with a torque wrench to 20 N-m.
3. Connect the wire to the spark plug.

Notes:

Notes:

Notes:

International Distributor List

Distributor:	Country:	Phone Number:
Atlantis Su ve Sulama Sisstemleri Lt	Turkey	90 216 344 86 74
Balama Prima Engineering Equip	Hong Kong	852 2155 2163
B-Ray Corporation	Korea	82 32 551 2076
Casco Sales Company	Puerto Rico	787 788 8383
Ceres S.A	Costa Rica	506 239 1138
CSSC Turf Equipment (pvt) Ltd	Sri Lanka	94 11 2746100
Cyril Johnston & Co	Northern Ireland	44 2890 813 121
Equiver	Mexico	52 55 539 95444
Femco S.A.	Guatemala	502 442 3277
G.Y.K. Company ltd.	Japan	81 726 325 861
Geomechaniki of Athens	Greece	30 10 935 0054
Guandong Golden Star	China	86 20 876 51338
Hako Gorund and Garden	Sweden	46 35 10 0000
Hayter Limited (U.K.)	United Kingdom	44 1279 723 444
Hydroturf Int. Co Dubai	United Arab Emirates	97 14 347 9479
Hydroturf Egypt LLC	Egypt	202 519 4308
Ibea S.p.A.	Italy	39 0331 853611
Irriamc	Portugal	351 21 238 8260
Jean Heybroek b.v.	Netherlands	31 30 639 4611
Lely (U.K.) Limited	United Kingdom	44 1480 226 800
Maquiver S.A.	Colombia	57 1 236 4079
Maruyama Mfg. Co. Inc.	Japan	81 3 3252 2285
Metra Kft	Hungary	36 1 326 3880
Mountfield a.s.	Czech Republic	420 255 704 220
Munditol S.A.	Argentina	54 11 4 821 9999
Oslinger Turf Equipment SA	Ecuador	593 4 239 6970
Oy Hako Ground and Garden Ab	Finland	358 987 00733
Parkland Products Ltd	New Zealand	64 3 34 93760
Prochaska & Cie	Austria	43 1 278 5100
RT Cohen 2004 Ltd	Israel	972 986 17979
Riversa	Spain	34 9 52 83 7500
Roth Motorgerate GmBh & Co	Germany	49 7144 2050
Sc Svend Carlsen A/S	Denmark	45 66 109 200
Solvert S.A.S	France	33 1 30 81 77 00
Spypros Stavrinides Limited	Cyprus	357 22 434131
Surge Systems India Limited	India	91 1 292299901
T-Markt Logistics Ltd	Hungary	36 26 525 500
Toro Australia	Australia	61 3 9580 7355
Toro Europe BVBA	Belgium	32 14 562 960

The Toro Warranty

Conditions and Products Covered

The Toro® Company and its affiliate, Toro Warranty Company, pursuant to an agreement between them, jointly promises to the original purchaser* to repair any Toro Product used for normal residential purposes* if defective in materials or workmanship. The following time periods apply from the date of original purchase:

Products	Warranty Period
Walk Power Mowers	2-year limited warranty
Rear Engine Riders	2-year limited warranty
Lawn & Garden Tractors	2-year limited warranty
Electric Hand Held Products	2-year limited warranty
Snowthrowers	2-year limited warranty
Consumer Zero Turn	2-year limited warranty

* "Original purchaser" means use the person who originally purchased Toro products.

* "Normal residential purposes" means use of the product on the same lot as your home. Use at more than one location is considered commercial use, and the commercial use warranty would apply.

Limited Warranty for Commercial Use

Toro Consumer Products and attachments used for commercial, institutional, or rental use are warranted against defects in materials or workmanship for the following time periods from the date of original purchase:

Products	Warranty Period
Walk Power Mowers	90 day warranty
Rear Engine Riders	90 day warranty
Lawn & Garden Tractors	90 day warranty
Electric Hand Held Products	90 day warranty
Snowthrowers	90 day warranty
Consumer Zero Turn	45 day warranty

Instructions for Obtaining Warranty Service

If you think that your Toro Product contains a defect in materials or workmanship, follow this procedure:

1. Contact your seller to arrange service of the product. If for any reason it is impossible for you to contact your seller, you may contact any Toro Authorized Distributor to arrange service.
2. Bring the product and your proof of purchase (sales receipt) to your seller or the Service Dealer.

If for any reason you are dissatisfied with the Service Dealer's analysis or with the assistance provided, contact the Toro importer or contact us at:

Customer Care Department, Consumer Division
Toro Warranty Company
8111 Lyndale Avenue South
Bloomington, MN 55420-1196
Manager: Technical Product Support: 001-952-887-8248

See attached Distributor List

Owner Responsibilities

You must maintain your Toro Product by following the maintenance procedures described in the operator's manual. Such routine maintenance, whether performed by a dealer or by you, is at your expense.

Items and Conditions Not Covered

This express warranty does not cover:

- Cost of regular maintenance service or parts, such as filters, fuel, lubricants, tune-up parts, blade sharpening, brake and clutch adjustments.
- Any product or part which has been altered or misused or required replacement or repair due to normal wear, accidents, or lack of proper maintenance.
- Repairs necessary due to improper fuel, contaminants in the fuel system, or failure to properly prepare the fuel system prior to any period of non-use over three months.
- Engine and transmission. These are covered by the appropriate manufacturer's guarantees with separate terms and conditions.

All repairs covered by this warranty must be performed by an Authorized Toro Service Dealer using Toro approved replacement parts.

General Conditions

The purchaser is covered by the national laws of each country. The rights to which the purchaser is entitled with the support of these laws are not restricted by this warranty.