FORM NO. 3315–664

TORO®

MODEL NO. 22043–390001 & UP

PARTS CATALOG

PROLINE 21"
RECYCLER® Mower

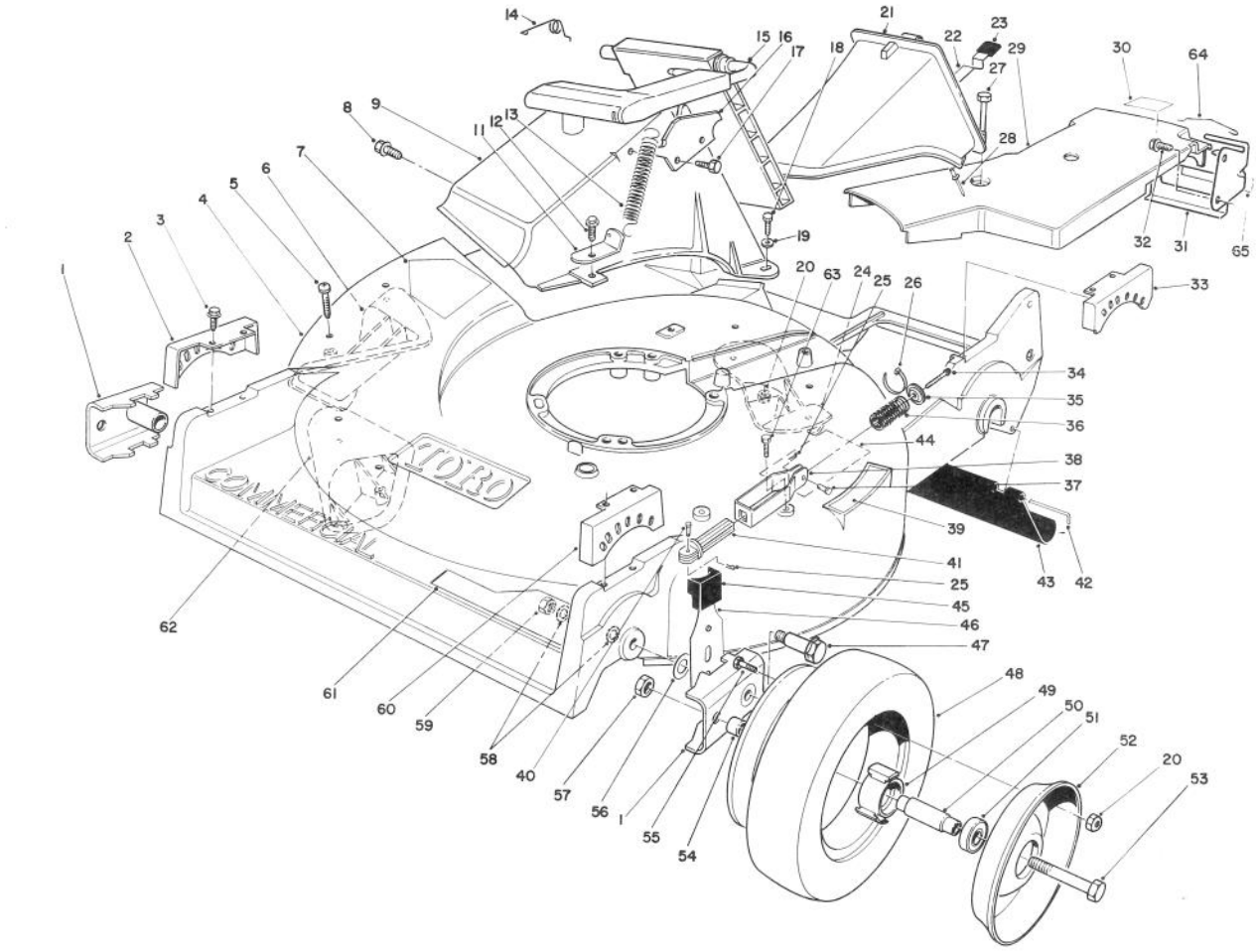

C–1141

HOUSING ASSEMBLY

Ref. No.	Part No.	Description	No. Used
1	61–8300	Pivot Arm Assembly	2
2	49–8770	Quandrant – Front R.H.	1
3	49–2040	Screw – Thread Forming	8
4	14–9479	Housing – Commercial (Incl. Ref. #5–7, 24, & 62)	1
5	32144–111	Screw – Pan Hd.	6
6	92–1730	Kicker	1
7	43–8480	Decal – Danger	1
8	46–6810	Screw – Thread Forming	1
9	82–9150	Chute – Discharge	1
11	71–9350	Bracket – Spring	1
12	46–6811	Screw – Thread Forming	1
13	76–4660	Spring	1
14	80–3770	Retainer – Door	1
15	77–0200	Door Assembly	1
16	76–4570	Plate – Latch	1
17	46–8090	Screw – Self Tapping	2
18	321–7	Screw – Hex Hd. Cap	2
19	3256–22	Washer – Flat	2

Ref. No.	Part No.	Description	No. Used
20	3296–42	Nut – Lock	10
21	77–0500	Plug – Discharge (Incl. Ref. #22, 23, & 28)	1
22	76–4640	Latch – Plug	1
23	76–4650	Grip – Latch	1
24	92–1750	Plate – Kicker	1
25	3272–1	Pin – Cotter	2
26	3290–378	Tie – Cable	1
27	37–7260	Screw – Special	2
28	3295–35	Rivet	1
29	74–1770	Cover – Belt	1
30	52–2620	Label – Grease	1
31	74–1741	Bracket – Traction Adj.	1
32	32144–70	Screw – Thread Forming	1
33	49–8740	Quadrant – Rear L.H.	1
*	49–8750	Quadrant – Rear R.H.	1
34	46–7040	Screw – Hex Hd. Cap	1
35	65–5280	Retainer – Spring	1
36	84–9100	Spring – BBC	1

*Not Illustrated

TPS

© The TORO Company – 1992

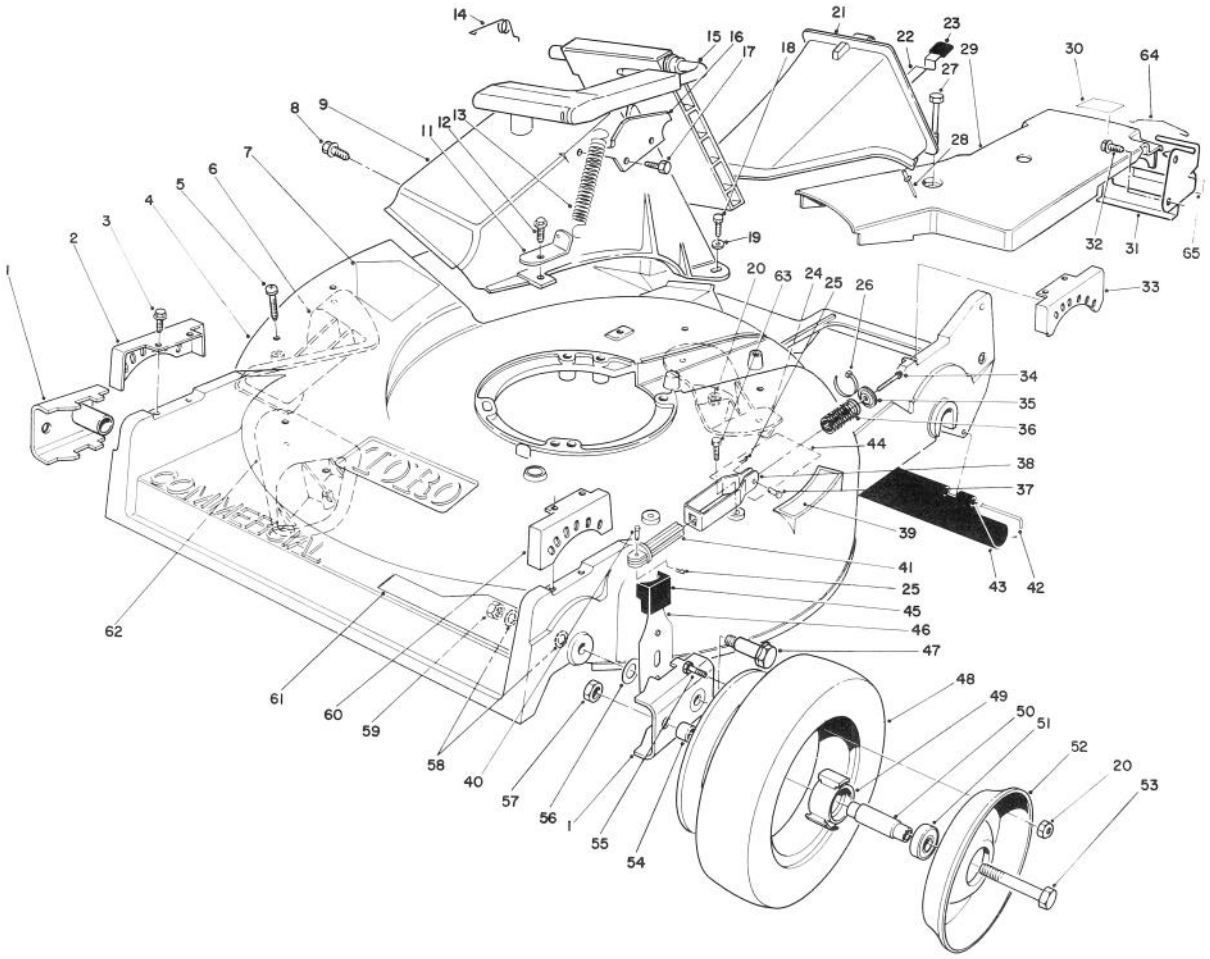

HOUSING ASSEMBLY (Continued)

Ref. No.	Part No.	Description	No. Used
37	84–9040	Pin – Cable	1
38	84–8880	Bracket – Spring	1
39	46–7370	Decal – Step Pad	1
40	84–9050	Pin _ Spring Guide	1
41	84–8870	Guide – Spring	1
42	33–3208	Rod – Shield	1
43	44–0580	Shield – Trailing	1
44	71–9370	Decal – Danger Covers	1
45	25–7740	Knob – Arm	2
46	66–7560	Spring Arm Ass'y – Front	2
47	27–6232	Screw – Pivot	2
48	53–7740	Tire	2
49	52–2410	Hub – Support Bearing	2
50	52–2440	Spacer – Bearing	2
51	52–2450	Bearing – Wheel	4
52	53–7780	Plate – Wheel Half	4

Ref. No.	Part No.	Description	No. Used
53	323–12	Screw – Hex Hd. Cap	2
54	52–2480	Spacer – Wheel	2
55	321–2	Screw – Hex Hd. Cap	8
56	257–3	Washer – Pivot	2
57	32152–2	Nut – Lock	2
58	40–1940	Washer – Hardened	4
59	3296–6	Nut – Lock	2
60	49–8760	Quandrant – Front L.H.	1
61	92–1796	Decal – Recycler	1
62	92–1720	Plate – Kicker	1
63	323–6	Screw – Hex Hd. Cap	2
64	46–7030	Retainer – Cable	1
65	74–1970	Decal – Traction Adj.	1
*	53–7720	Wheel & Tire Assembly (Incl. Ref. #20, 48–50, & 55)	2

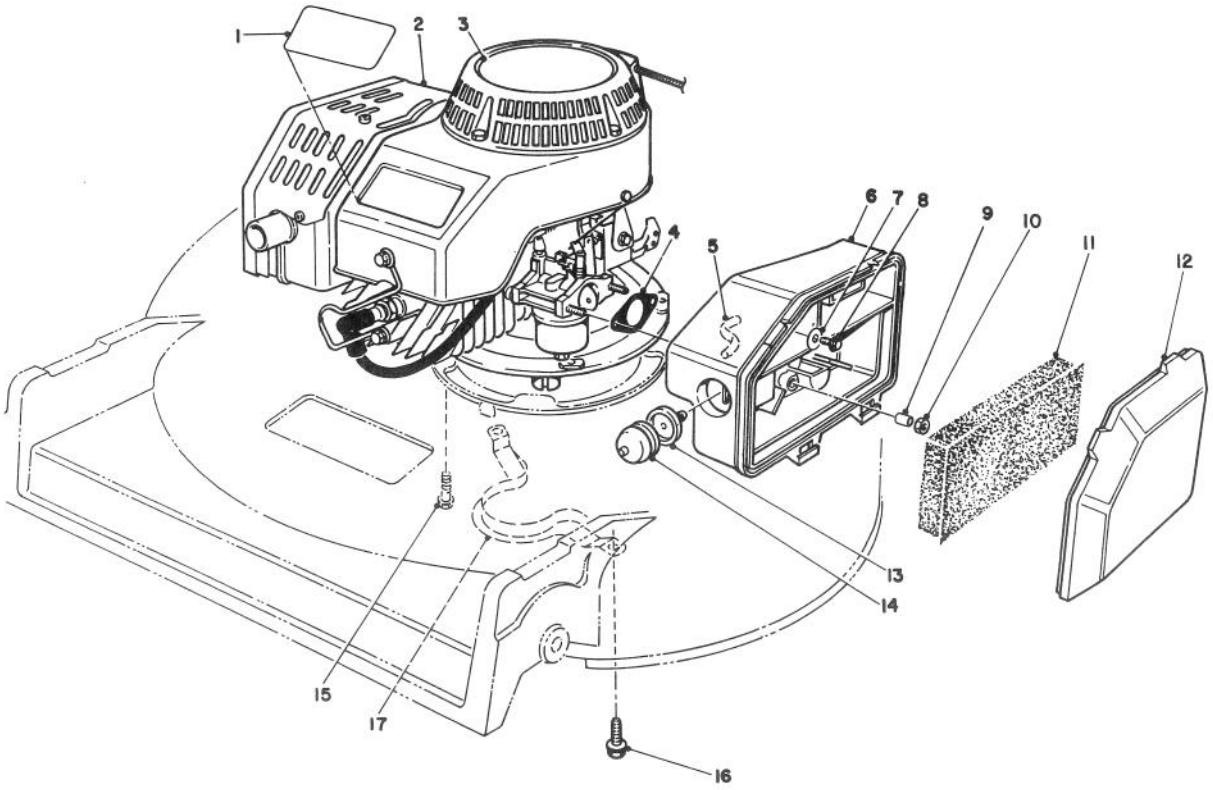

C–1142

ENGINE ASSEMBLY

Ref. No.	Part No.	Description	No. Used
1	71–1260	Decal – Proline	1
2	61–8062	Engine – Complete	1
3	77–0040	Decal – Recoil	1
4	81–0090	Gasket	1
5	44–3172	Hose – Primer	1
6	63–9330	Body – Air Cleaner	1
7	3256–16	Washer	1
8	51–2690	Screw – Hex Flange Hd.	1
9	62–3980	Sleeve	2

Ref. No.	Part No.	Description	No. Used
10	50–7180	Nut – Lock	2
11	63–9380	Filter – Foam	1
12	63–9340	Cover – Air Cleaner	1
13	44–2750	Body – Primer	1
14	66–7460	Bulb – Primer	1
15	66–9300	Screw – Hex Flange Hd.	4
16	32144–70	Screw – Thr'd Form	2
17	66–0570	Guide – Belt	1

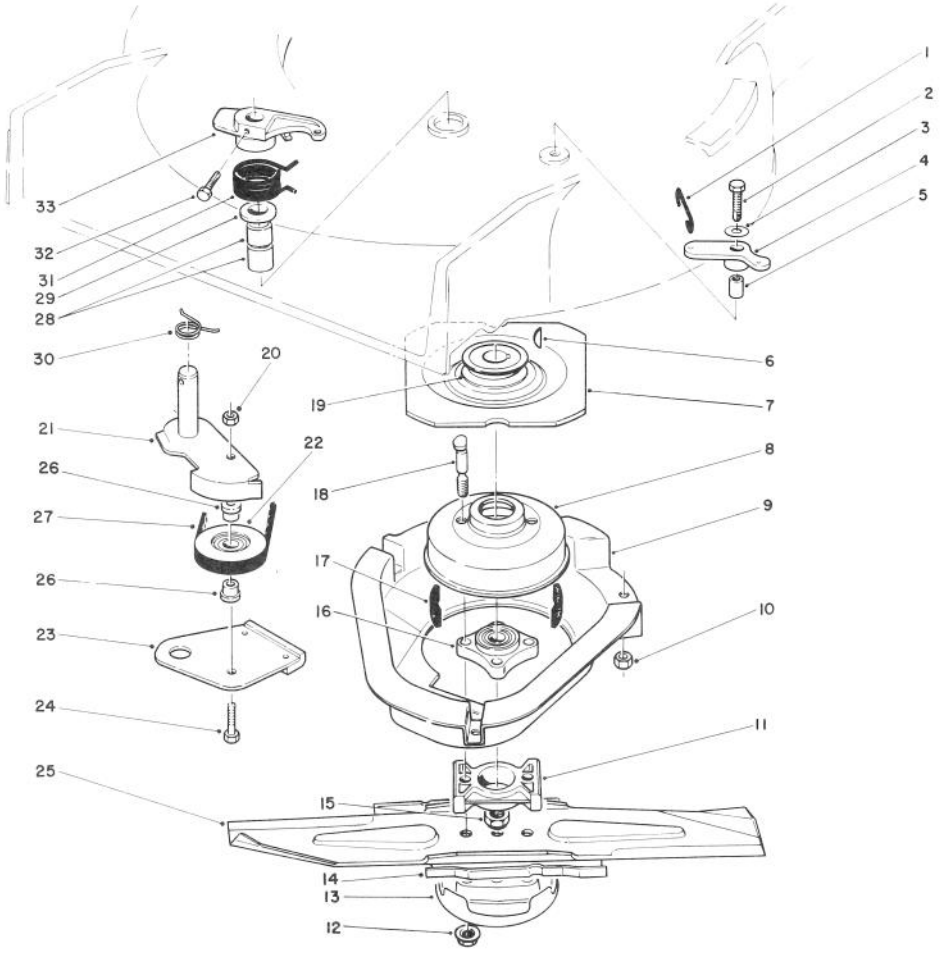

C–1137

BLADE BRAKE CLUTCH ASSEMBLY

Ref. No.	Part No.	Description	No. Used
1	49–2810	Link – Control	1
2	32104–107	Screw – Self Tap Hex Hd.	1
3	3256–23	Washer – Plain	1
4	49–7960	Bell Crank	1
5	49–7950	Sleeve – Bell Crank	1
6	3257–17	Key – Woodruff	1
7	56–6160	Flywheel	1
8	56–6170	Drum – Brake	1
9	46–5692	Shield	1
10	3296–39	Nut – Lock	2
11	62–4280	Spacer – Blade	1
12	54–9190	Locknut	2
13	80–2770	Cup – Anti–Scalp	1
14	91–2255	Stiffener – Blade	1
15	3296–33	Locknut	1
16	42–6890	Hub Assembly	1
17	52–3480	Dampener – Vibration	2

Ref. No.	Part No.	Description	No. Used
18	42–3190	Bolt – Blade	2
19	56–6180	Pulley Driver	1
20	3296–47	Locknut	1
21	84–9130	Arm – Idler	1
22	46–5650	Pulley Idler	1
23	84–9180	Brake Plate	1
24	322–6	Hex Hd. Capscrew	1
25	14–9419	Blade – 21"	1
26	46–5631	Hub – Idler Pulley	2
27	42–0884	V–Belt	1
28	68–9780	Bearing	2
29	70–1160	Washer – P.M.	1
30	85–6880	Spring – Torsion Lower	1
31	49–7970	Spring – Torsion Upper	1
32	32104–96	Screw – Self Tap Hex Hd.	1
33	49–2820	Lever	1

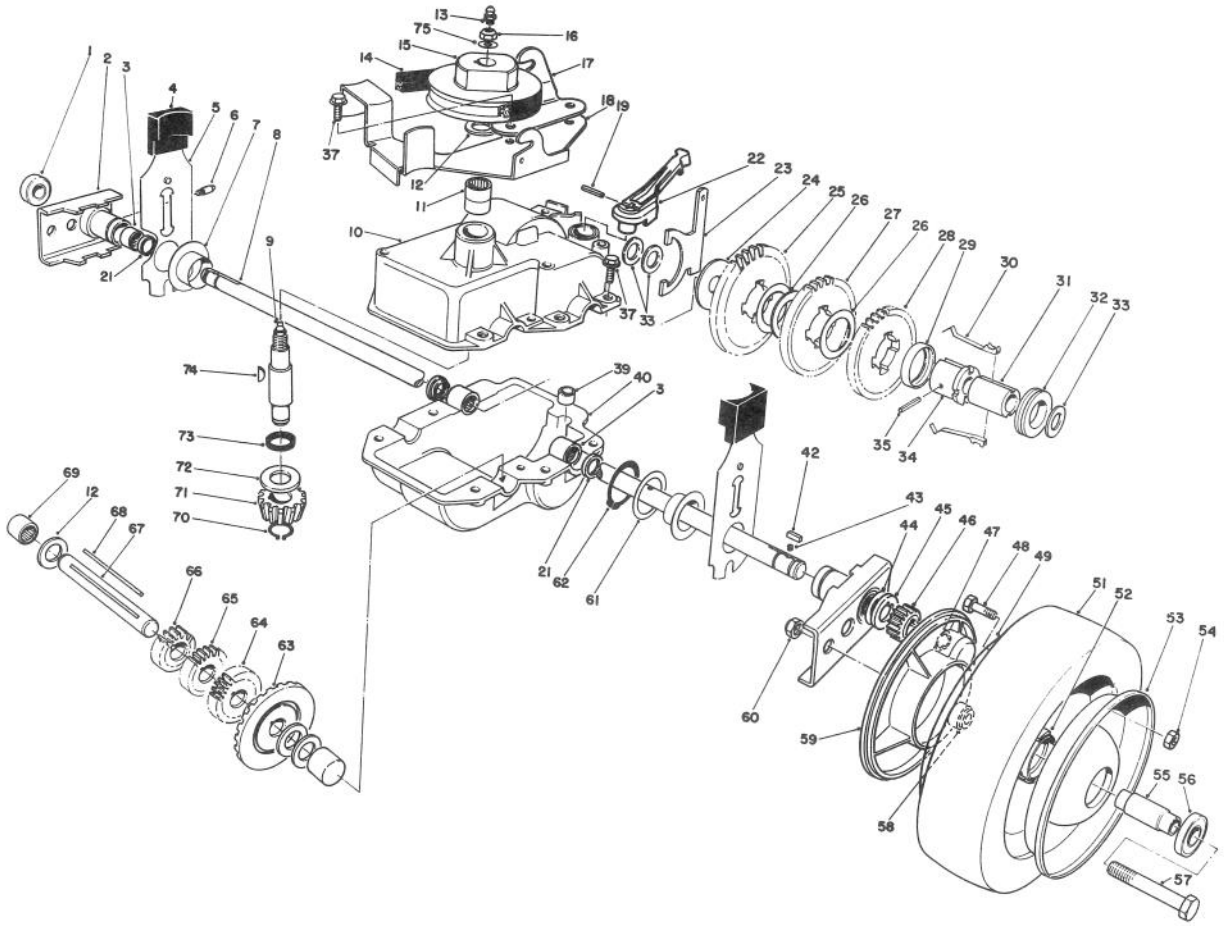

T–0678

GEAR CASE ASSEMBLY

Ref. No.	Part No.	Description	No. Used
1	52–2450	Bearing	2
2	74–1851	Pivot Arm Assembly (Incl. Ref. #1, 3, 6 & 21)	2
3	48–2060	Bearing – Needle	4
4	25–7740	Knob – Arm	2
5	66–7561	Spring Arm Assy. – Rear	2
6	302–26	Fitting – Grease	2
7	48–2170	Cap – End	2
8	74–1890	Shaft – Output	1
9	13–5149	Shaft – Input (Incl Ref. #13)	1
10	13–9739	Upper Case Assembly (Incl. Ref. #11 & 73)	1
11	47–7270	Bearing – Needle	2
12	36–4792	Washer – Thrust	4
13	302–63	Fitting – Grease	1
14	36–8070	V–Belt	1
15	39–6740	Pulley	1
16	3296–5	Nut – Lock	1
17	74–1750	Bracket – Traction, Engage	1
18	49–8461	Bracket – Guide, Belt	1
19	32121–99	Pin – Roll	1
21	47–6730	Seal	4

Ref. No.	Part No.	Description	No. Used
22	74–1960	Lever – Shift	1
23	60–8870	Yoke – Shift	1
24	29–9690	Washer – Flat	1
25	46–3560	Gear – 52T	1
26	36–4770	Spacer – Gear	3
27	29–9271	Gear – 42T	1
28	42–4740	Gear – 38T	1
29	55–8020	Retainer – Key	1
30	29–9330	Key – Shift	2
31	39–6720	Sleeve	1
32	29–9340	Collar – Shift	1
33	36–4780	Washer – Flat	3
34	55–8010	Sleeve – Gear	1
35	3285–19	Pin – Groove	1
37	49–2040	Screw – Self Tapping	8
39	29–9570	Bushing – Yoke	1
40	74–1920	Case – Lower	1
42	39–9680	Key	2
43	39–9650	Spring	2
44	49–7700	Washer – Thrust, Keyed	2
45	62–3830	Washer – Thrust, Keyed	2
46	39–9160	Pinion	2
47	32151–68	Ring – Klip	4

3315–664

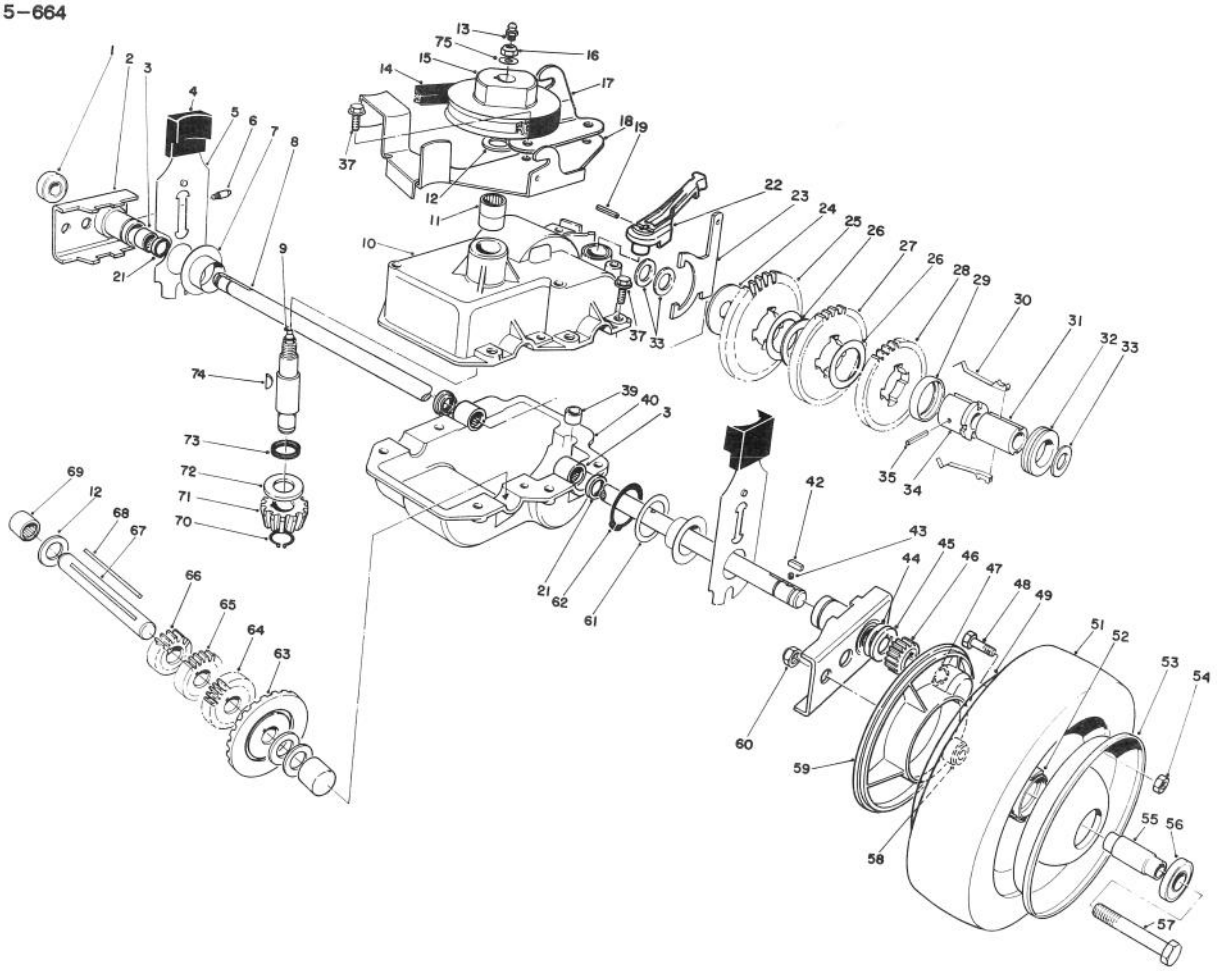

T–0678

GEAR CASE ASSEMBLY(Continued)

Ref. No.	Part No.	Description	No. Used
48	321–2	Screw – Cap, Hex. Hd.	8
49	53–7750	Wheel – Half	2
51	53–7740	Tire	2
52	52–2410	Hub – Support, Bearing	2
53	53–7780	Plate – Wheel Half	2
54	3296–42	Nut – Lock	8
55	52–2440	Spacer – Bearing	2
56	52–2450	Bearing – Wheel	4
57	323–13	Screw – Cap, Hex. Hd.	2
58	74–1650	Spacer – Wheel	2
59	74–1640	Cover – Wheel	2
60	32152–2	Nut – Lock	2
61	74–1810	Washer	2
62	32151–36	Ring – Retaining	2
63	74–1760	Gear – Bevel	1
64	39–6650	Gear – 18T	1

Ref. No.	Part No.	Description	No. Used
65	46–3550	Gear – 14T	1
66	46–3540	Gear – 12T	1
67	53–7950	Shaft – Intermediate	1
68	39–7842	Key – Square	1
69	252–103	Bearing – Closed	2
70	32151–57	Ring – Retaining	1
71	39–6660	Pinion – Bevel	1
72	47–2910	Washer – Thrust	1
73	47–7260	Seal	1
74	3257–1	Key – Woodruff	2
75	3256–45	Washer – Flat	1
*	74–1861	Gear Case Assembly (Incl. Ref. #3, 8–13, 15–18, 21, 23–40 & 63–74)	1
*	74–1720	Wheel & Tire Assembly (Incl. Ref. #48–49 & 51–56)	2

*Not Illustrated

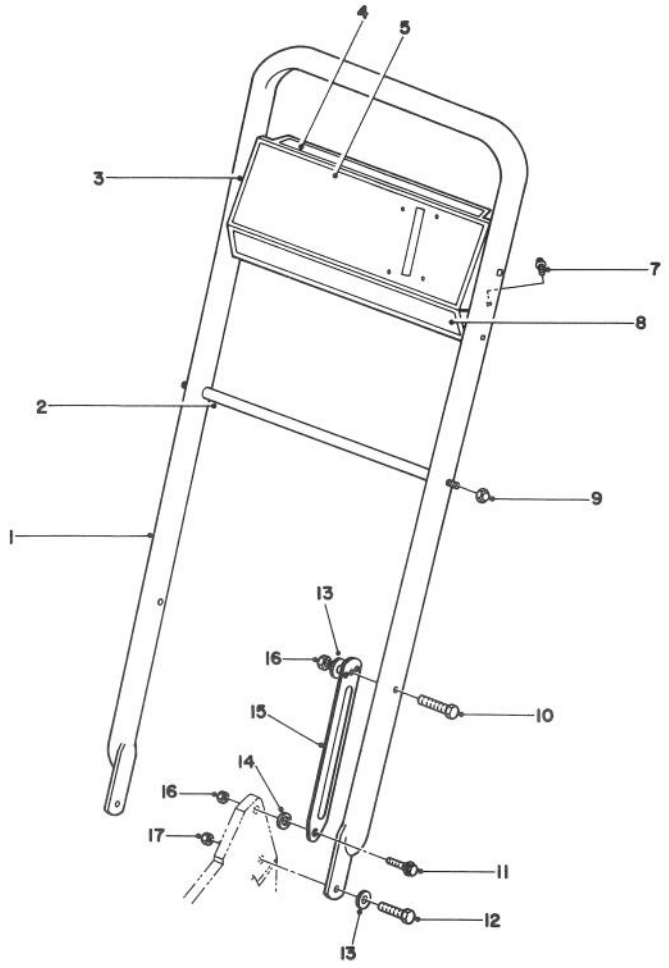

C–1139

HANDLE ASSEMBLY

Ref. No.	Part No.	Description	No. Used
1	84–8860	Handle	1
2	48–2810	Rod – Bag Support	1
3	14–7709	Panel – Control (Incl. Ref. #4, 5, & 8)	1
4	63–9060	Decal – Danger	1
5	85–6730	Decal – Panel	1
7	32104–76	Screw – Self Tapping	6
8	85–6720	Decal – Proline	1
9	32111–7	Nut – Acorn	2

Ref. No.	Part No.	Description	No. Used
10	322–7	Screw – Hex Hd. Cap	2
11	27–7210	Screw – Shoulder	2
12	322–6	Screw – Hex Hd. Cap	2
13	3290–456	Washer – Flat	4
14	3–3287	Spacer – Handle Latch	2
15	84–8361	Latch – Handle L.H.	1
*	84–8401	Latch – Handle R.H.	1
16	3296–29	Nut – Lock	4
17	3296–47	Nut – Lock	2

*Not Illustrated

3315–664

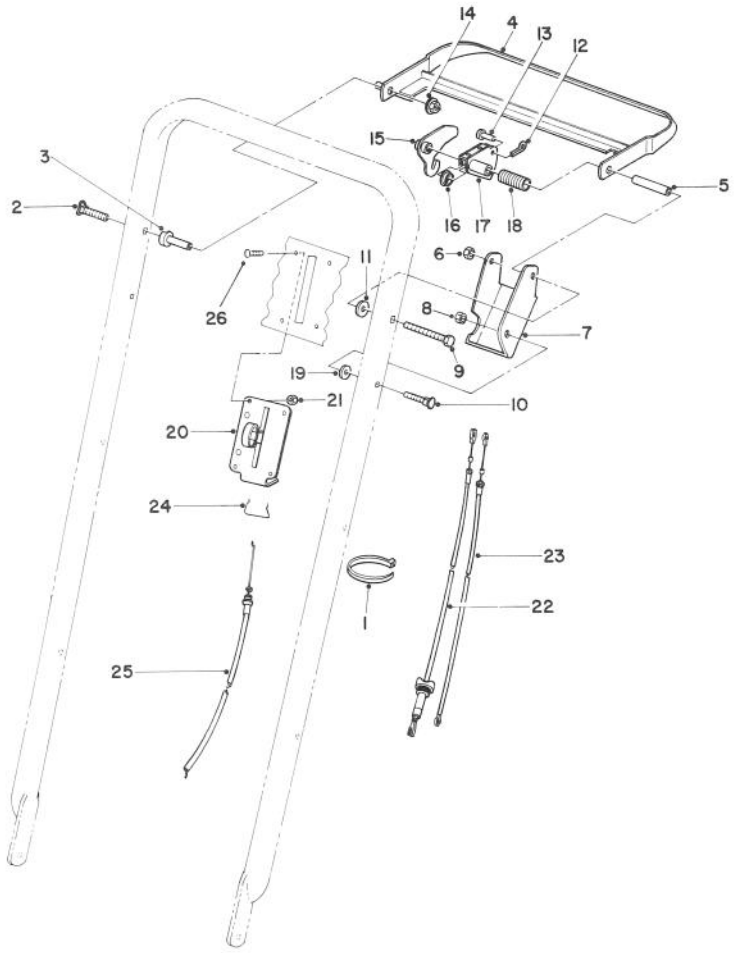

C–1140

TRACTION CONTROL ASSEMBLY

Ref. No.	Part No.	Description	No. Used
1	3290–378	Tie – Cable	2
2	17–9427	Screw – Handle	1
3	49–1631	Support – Spacer	1
4	84–8940	Bar – Control	1
5	84–9030	Spacer – Control Bracket	1
6	3296–29	Nut – Lock	1
7	92–1778	Bracket – Control	1
8	3296–42	Nut – Lock	1
9	322–19	Screw – Hex Hd. Cap	1
10	46–6430	Screw – Handle	1
11	71–9310	Spacer	1
12	3272–1	Pin – Cotter	1
13	84–9040	Pin – Cable	1

Ref. No.	Part No.	Description	No. Used
14	3296–58	Nut – Hex Flange	1
15	84–9000	Lever – Traction	1
16	86–9320	Bushing – Nylon Flange	1
17	84–8990	Lever – BBC	1
18	85–6750	Spring – Control	1
19	71–9320	Spacer	1
20	85–6770	Control – Throttle	1
21	3296–2	Nut – Lock	4
22	84–9120	Cable – Traction	1
23	84–9110	Cable – Clutch	1
24	85–6780	Retainer – Throttle Control	1
25	85–6760	Cable – Throttle	1
26	3250–14	Screw – Pan Hd.	4

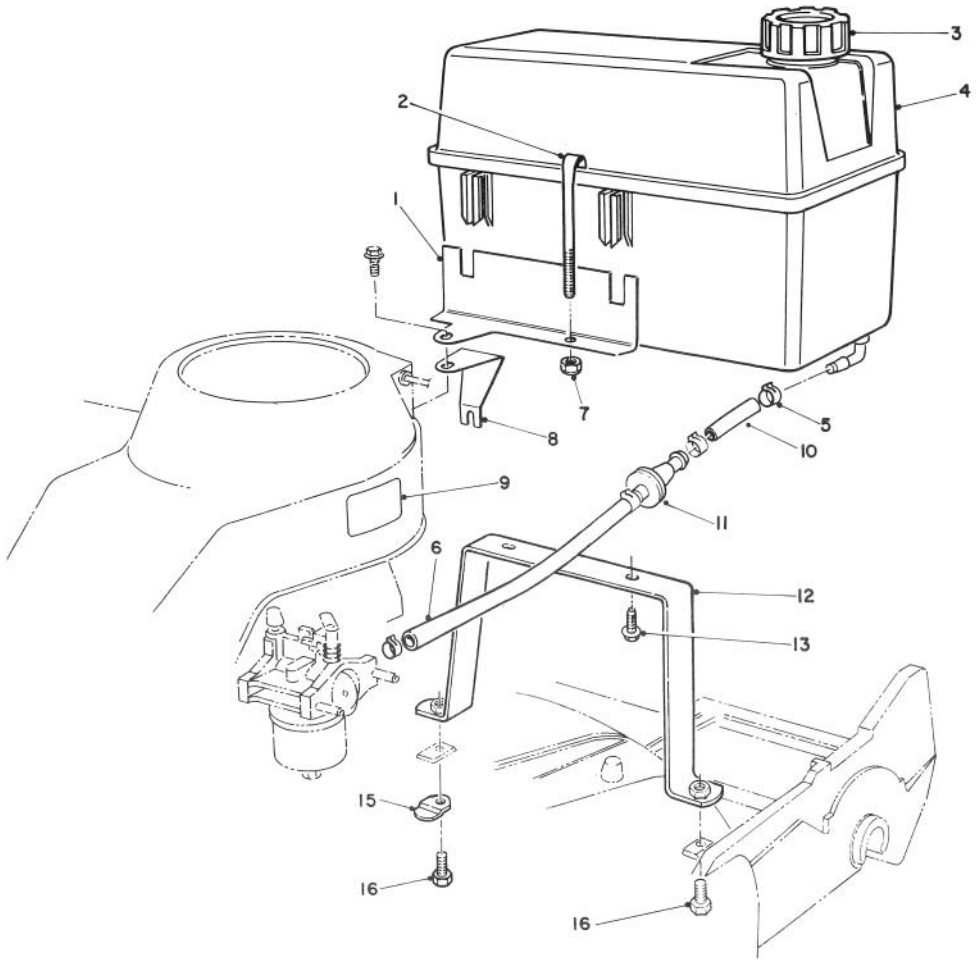

C–1143

GAS TANK ASSEMBLY

Ref. No.	Part No.	Description	No. Used
1	74–2110	Bracket – Tank	1
2	77–2840	Retainer – Fuel Tank	1
3	55–3575	Cap – Gas	1
4	82–8460	Tank – Gas	1
5	2412–95	Clamp – Fuel Line	4
6	51–3214	Hose – Fuel 7.1"	1
7	3296–42	Nut – Lock	1
8	77–0520	Support – Bracket	1

Ref. No.	Part No.	Description	No. Used
9	62–7600	Decal – Fuel	1
10	51–3211	Hose – Fuel 2.3"	1
11	71–9280	Filter – Fuel	1
12	84–9160	Base – Tank	1
13	46–8091	Screw – Hex Washer Hd.	2
15	84–8930	Retainer – Shield	3
16	323–7	Screw – Hex Hd. Cap	2

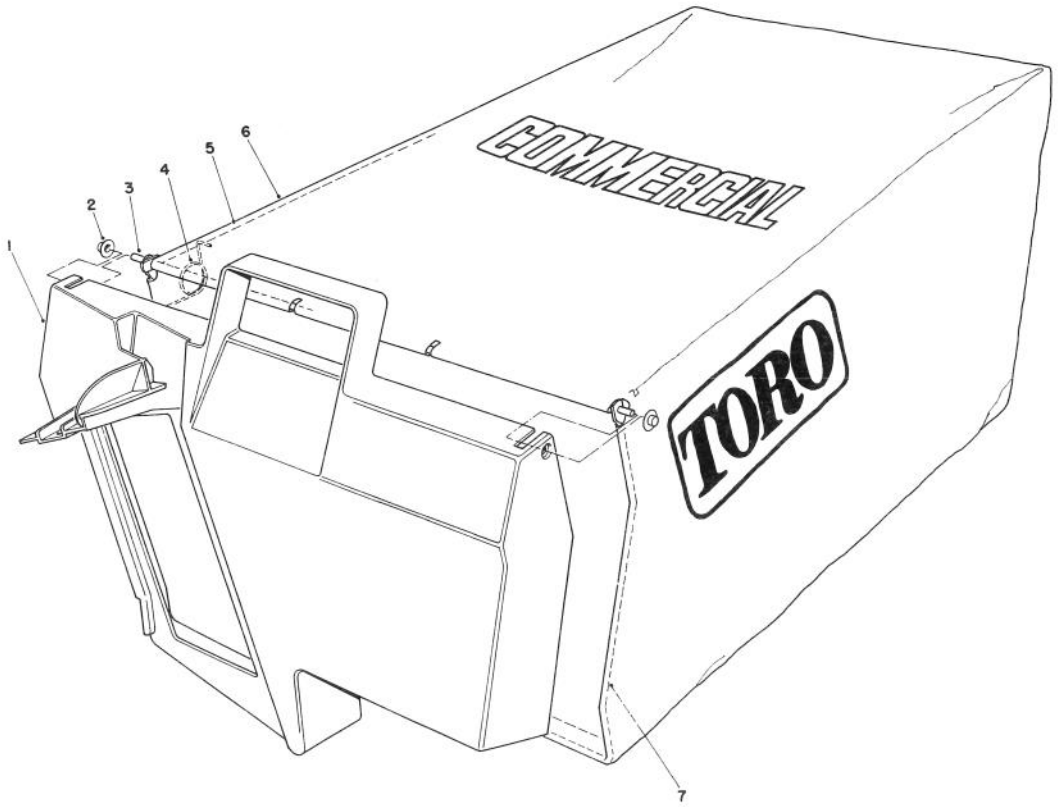

T–1100

GRASS BAG ASSEMBLY No. 11–5609

Ref. No.	Part No.	Description	No. Used
1	48–2840	Door – Bag, Grass	1
2	3290–422	Nut – Push, Washer Cap	2
3	33–4820	Hinge – Door, Bag	1
4	36–6910	Spring	2

Ref. No.	Part No.	Description	No. Used
5	42–4030	Frame – Bag, Upper	1
6	8–2759	Bag – Grass	1
7	42–4020	Frame – Bag	1

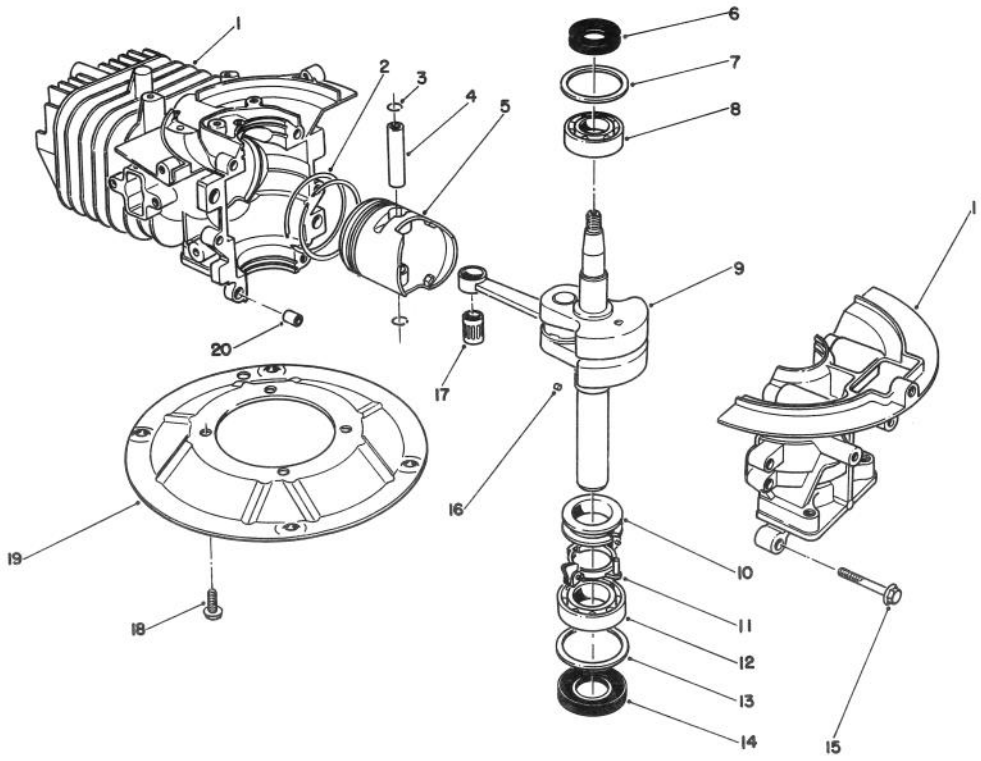

T–0663

CRANKSHAFT ASSEMBLY (Model No. 47PN2–7)

Ref. No.	Part No.	Description	No. Used
1	81–2800	Crankcase/Cylinder Assy.	1
2	81–0590	Piston Ring Set	1
3	81–0620	Circlip	2
4	81–0600	Pin – Wrist	1
5	81–2140	Piston – 58mm	1
6	81–0720	Seal – Oil, Upper	1
7	81–0710	Washer – Thrust, Upper	1
8	81–0690	Bearing – Upper 20mm	1
9	81–5830	Crankshaft/Connecting Rod Assembly	1
10	81–0770	Spacer – Governor	1

Ref. No.	Part No.	Description	No. Used
11	81–0750	Bracket – Arm, Governor	1
12	81–0700	Bearing – Lower 25mm	1
13	81–0730	Washer – Thrust, Lower	1
14	81–0740	Seal – Oil, Lower	1
15	81–0540	Bolt 30mm Lg.	5
16	81–0760	Pin – Crankshaft	1
17	81–0610	Bearing – Wrist Pin	1
18	81–0570	Bolt	4
19	81–0560	Plate – Mounting	1
20	81–0520	Pin – Crankcase	2
*	12–8099	Short Block	1

*Not Illustrated

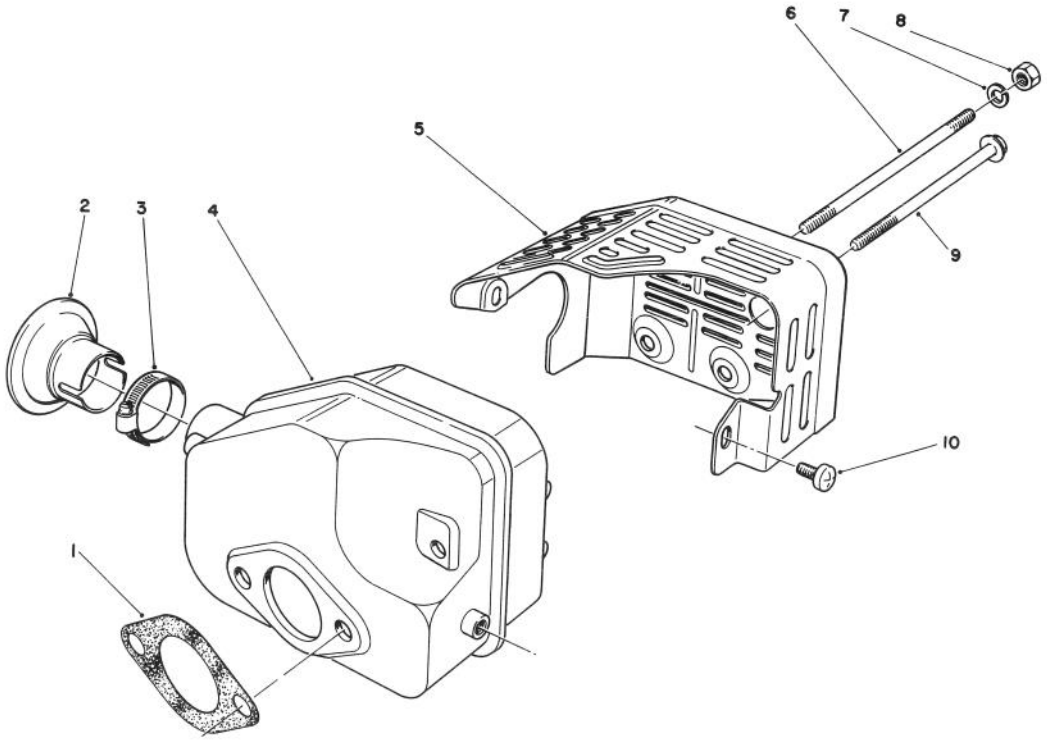

T–0667

MUFFLER ASSEMBLY (Model No. 47PN2–7)

Ref. No.	Part No.	Description	No. Used
1	81–1080	Gasket – Muffler	1
2	81–0200	Spark Arrester (Optional)	1
†3		Clamp	1
4	81–5690	Muffler	1
5	81–2450	Cover – Muffler	1

Ref. No.	Part No.	Description	No. Used
6	81–1100	Bolt	2
7	81–1120	Washer – Lock	2
8	81–1110	Nut	2
9	81–1150	Bolt – Self Tapping	1
10	81–1140	Screw – Phillips Hd.	2

†Obtain Locally

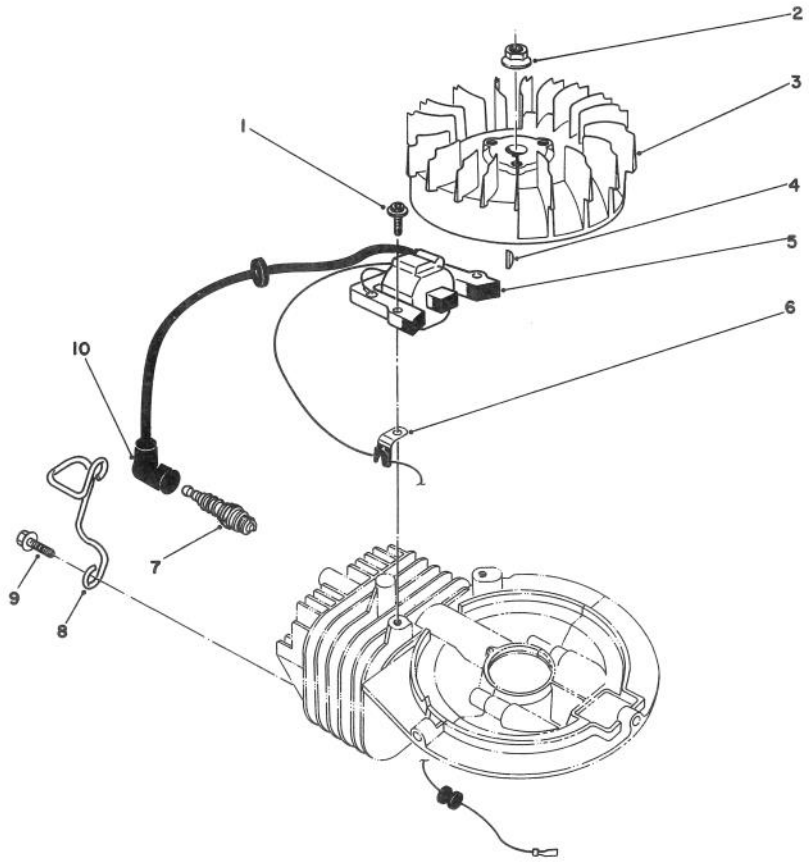

T–0664

IGNITION ASSEMBLY (Model No. 47PN2–7)

Ref. No.	Part No.	Description	No. Used
1	81–5680	Screw – Cap, Hex Hd.	2
2	81–1330	Nut	1
3	81–2810	Flywheel – Magneto	1
4	81–2370	Key – Flywheel	1
5	81–2820	Coil/Ignition Assembly	1
6	81–1480	Clamp	1

Ref. No.	Part No.	Description	No. Used
7	81–0181	Spark Plug	1
8	81–2120	Guard – Spark Plug	1
9	81–2350	Bolt – Self Tapping (20mm Lg.)	2
10	81–1500	Cap Assembly – Spark Plug	1
*	41–7650	Puller – Flywheel	1

*Not Illustrated

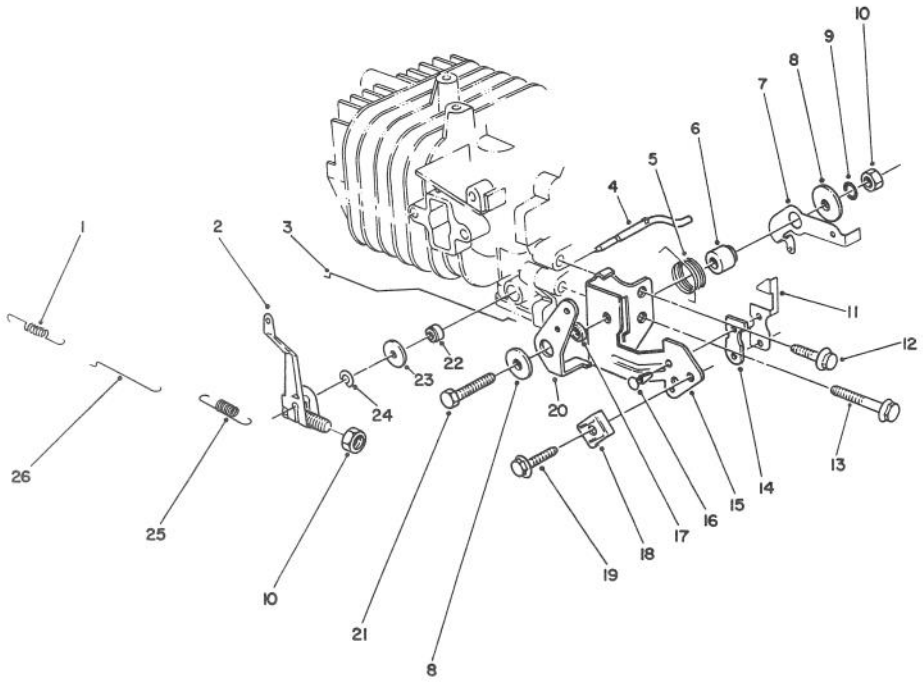

C–0564

GOVERNOR ASSEMBLY (Model No. 47PN2–7)

Ref. No.	Part No.	Description	No. Used
1	81–0920	Spring – Carburetor Rod	1
2	81–5420	Governor Arm/Bolt Assy.	1
3	81–5410	Rod – Choke	1
4	81–2880	Shaft – Governor	1
5	81–2460	Spring – Lever, Choke	1
6	81–5780	Spacer – Lever, Governor	1
7	81–2850	Lever – Governor	1
8	81–1750	Washer – Lever, Choke	2
9	81–1450	Washer – Lock	1
10	81–0900	Nut	2
11	81–1840	Terminal – Kill Switch	1
12	81–1170	Bolt – Self Tapping	1
13	81–0540	Bolt	1

Ref. No.	Part No.	Description	No. Used
14	81–1830	Insulator – Kill Switch	1
15	81–5770	Bracket – Throttle	1
16	81–4530	Rivet – Kill Switch	2
17	81–2470	Spacer – Lever, Choke	1
18	81–2430	Clamp – Cable	1
19	50–0130	Bolt – Clamp, Cable	1
20	81–1710	Lever – Choke	1
21	81–1730	Bolt – Bracket, Throttle	1
22	81–0850	Seal – Shaft, Governor	1
23	81–0860	Washer	1
24	81–0870	Ring – Retaining	1
25	81–2830	Spring – Governor	1
26	81–0910	Rod – Carburetor	1

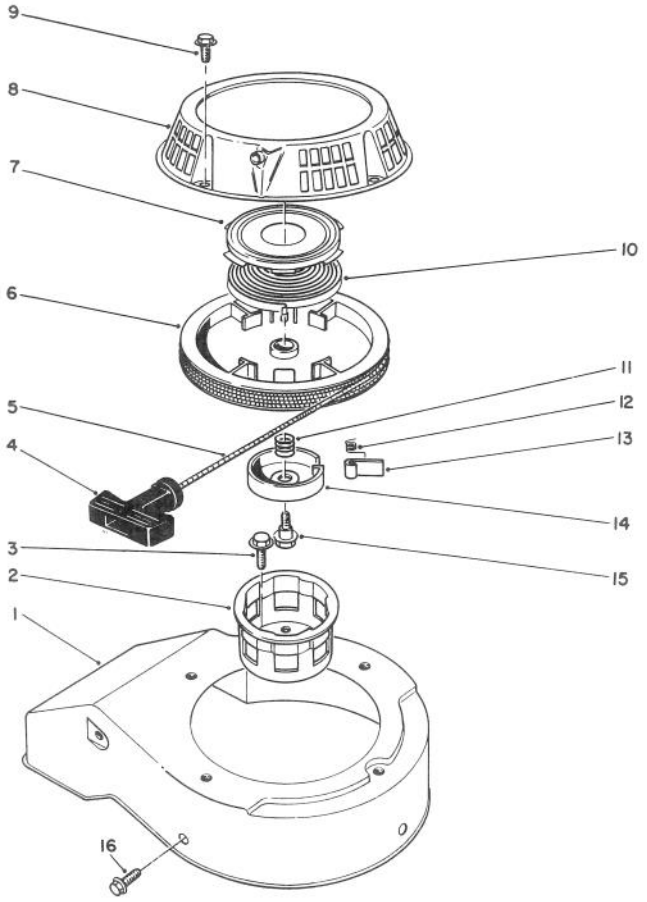

T–1102

RECOIL ASSEMBLY
(Model No. 47PN2–7)

Ref. No.	Part No.	Description	No. Used
1	81–2080	Cover – Fan, Cooling	1
2	81–2170	Cup – Pulley, Starter	1
3	81–1300	Bolt	3
4	81–1630	Handle – Recoil	1
5	81–1270	Rope	1
6	81–1210	Pulley – Rope	1
7		Retainer – Spring, Recoil	1
8	81–2100	Case – Starter	1
9	81–1280	Bolt	4
10		Spring – Recoil	1
11	81–1240	Spring – Compression	1

Ref. No.	Part No.	Description	No. Used
12	81–1220	Spring – Dog	1
13	81–1230	Dog – Starter	1
14	81–1250	Retainer – Dog	1
15	81–1260	Bolt – Shoulder	1
16	53–1340	Bolt – Self Tapping (15mm Lg.)	3
*	81–2030	Starter Assembly (Incl. Ref. #4–15)	1
*	81–2300	Spring & Retainer Assembly (Incl. Ref. #7 & 10)	1

*Not Illustrated

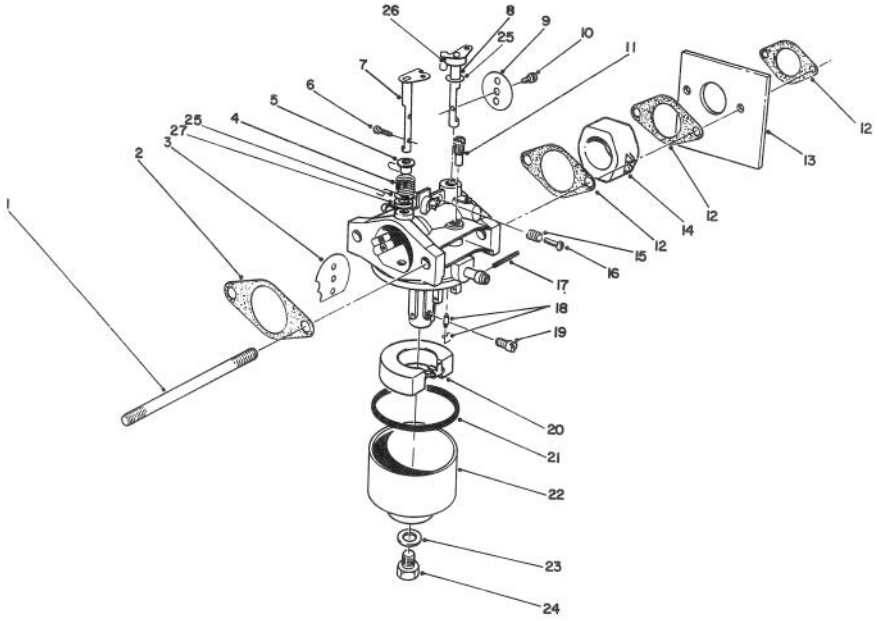

C–0563

CARBURETOR ASSEMBLY (Model No. 47PN2–7)

Ref. No.	Part No.	Description	No. Used
1	81–5450	Stud Bolt, Carburetor	2
2	81–0090	Gasket	1
3	81–0240	Valve – Choke	1
4	81–0230	Spring – Choke	1
5	81–0220	Bushing – Choke	1
6	81–2160	Screw – Choke Plate	2
7	81–1950	Shaft – Choke	1
8	81–0250	Shaft – Throttle	1
9	81–0260	Valve – Throttle	1
10	81–0270	Screw – Throttle	1
11	81–1030	Jet – Pilot #40	1
12	81–0780	Gasket – Carburetor	3
13	81–5490	Shield – Carburetor	1
14	81–5440	Insulator – Carburetor	1
15	81–2580	Spring – Idle Stop	1
16	50–0250	Screw – Idle Stop	1
17	81–2600	Pin – Float	1
18	81–4910	Needle Valve	1

Ref. No.	Part No.	Description	No. Used
19	81–1060	Jet – Main #75	1
*	81–2340	Jet – Main #72.5 High Alt. Above 6,000 Ft. (Optional)	A/R
20	81–0970	Float	1
21	81–1010	Gasket – Bowl, Float	1
22	81–5660	Bowl – Float	1
23	81–1020	Gasket – Capscrew, Bowl	1
24	81–5670	Capscrew – Bowl	1
25	81–2530	Seal	2
26	81–2540	Ring	1
27	81–2550	Packing	1
*	12–6379	Carburetor Kit (Incl. Ref. #2, 12, 18, 21 & 23)	1
*	81–2520	Carburetor Assy. Complete	1
*	81–5430	Carburetor Ass'y w/Primer	1
*	81–5810	Needle Valve Kit (Incl.Valve Seat & Ref. #18)	1

*Not Illustrated

TORO PART NUMBER INDEX

Part No.	Description	Pg. No.	Ref. No.	Qty.
3–3287	Spacer – Handle Latch	7	14	2
8–2759	Bag – Grass	10	6	1
12–6379	Carburetor	17	*	1
12–8099	Short Block	11	*	1
13–5149	Shaft – Input	5	9	1
13–9739	Upper Case Assembly	5	10	1
14–7709	Panel – Control	7	3	1
14–9419	Blade – 21	4	25	1
14–9479	Housing – Commercial	1	4	1
17–9427	Screw – Handle	8	2	1
25–7740	Knob – Arm	5	4	2
25–7740	Knob – Arm	2	45	2
27–6232	Screw – Pivot	2	47	2
27–7210	Screw – Shoulder	7	11	2
29–9271	Gear – 42T	5	27	1
29–9330	Key – Shift	5	30	2
29–9340	Collar – Shift	5	32	1
29–9570	Bushing – Yoke	5	39	1
29–9690	Washer – Flat	5	24	1
33–3208	Rod – Shield	2	42	1
33–4820	Hinge – Door, Bag	10	3	1
36–4770	Spacer – Gear	5	26	3
36–4780	Washer – Flat	5	33	3
36–4792	Washer – Thrust	5	12	4
36–6910	Spring	10	4	2
36–8070	V–Belt	5	14	1
37–7260	Screw – Special	1	27	2
39–6650	Gear – 18T	6	64	1
39–6660	Pinion – Bevel	6	71	1
39–6720	Sleeve	5	31	1
39–6740	Pulley	5	15	1
39–7842	Key – Square	6	68	1
39–9160	Pinion	5	46	2
39–9650	Spring	5	43	2
39–9680	Key	5	42	2
40–1940	Washer – Hardened	2	58	4
41–7650	Puller – Flywheel	13	*	1
42–0884	V–Belt	4	27	1
42–3190	Bolt – Blade	4	18	2
42–4020	Frame – Bag	10	7	1
42–4030	Frame – Bag, Upper	10	5	1
42–4740	Gear – 38T	5	28	1
42–6890	Hub Assembly	4	16	1
43–8480	Decal – Danger	1	7	1
44–0580	Shield – Trailing	2	43	1
44–2750	Body – Primer	3	13	1
44–3172	Hose – Primer	3	5	1
46–3540	Gear – 12T	6	66	1
46–3550	Gear – 14T	6	65	1
46–3560	Gear – 52T	5	25	1
46–5631	Hub – Idler Pulley	4	26	2
46–5650	Pulley Idler	4	22	1
46–5692	Shield	4	9	1
46–6430	Screw – Handle	8	10	1
46–6810	Screw – Thread Forming	1	8	1
46–6811	Screw – Thread Forming	1	12	1
46–7030	Retainer – Cable	2	64	1
46–7040	Screw – Hex Hd. Cap	1	34	1
46–7370	Decal – Step Pad	2	39	1
46–8090	Screw – Self Tapping	1	17	2
46–8091	Screw – Hex Washer Hd.	9	13	2
47–2910	Washer – Thrust	6	72	1
47–6730	Seal	5	21	4
47–7260	Seal	6	73	1
47–7270	Bearing – Needle	5	11	2
48–2060	Bearing – Needle	5	3	4
48–2170	Cap – End	5	7	2
48–2810	Rod – Bag Support	7	2	1
48–2840	Door – Bag, Grass	10	1	1
49–1631	Support – Spacer	8	3	1
49–2040	Screw – Self Tapping	5	37	8
49–2040	Screw – Thread Forming	1	3	8
49–2810	Link – Control	4	1	1
49–2820	Lever	4	33	1
49–7700	Washer – Thrust, Keyed	5	44	2
49–7950	Sleeve – Bell Crank	4	5	1
49–7960	Bell Crank	4	4	1
49–7970	Spring – Torsion Upper	4	31	1
49–8461	Bracket – Guide, Belt	5	18	1
49–8740	Quadrant – Rear L.H.	1	33	1
49–8750	Quadrant – Rear R.H.	1	*	1
49–8760	Quadrant – Front L.H.	2	60	1
49–8770	Quadrant – Front R.H.	1	2	1
50–0130	Bolt – Clamp, Cable	14	19	1
50–0250	Screw – Idle Stop	16	16	1
50–7180	Nut – Lock	3	10	2
51–2690	Screw – Hex Flange Hd.	3	8	1
51–3211	Hose – Fuel 2.3	9	10	1
51–3214	Hose – Fuel 7.1	9	6	1
52–2410	Hub – Support Bearing	2	49	2
52–2410	Hub – Support, Bearing	6	52	2
52–2440	Spacer – Bearing	2	50	2
52–2440	Spacer – Bearing	6	55	2
52–2450	Bearing	5	1	2
52–2450	Bearing – Wheel	2	51	4
52–2450	Bearing – Wheel	6	56	4
52–2480	Spacer – Wheel	2	54	2
52–2620	Label – Grease	1	30	1
52–3480	Dampener – Vibration	4	17	2
53–1340	Bolt – Self Tapping	15	16	3
53–7720	Wheel & Tire Assembly	2	*	2
53–7740	Tire	2	48	2
53–7740	Tire	6	51	2
53–7750	Wheel – Half	6	49	2
53–7780	Plate – Wheel Half	2	52	4
53–7780	Plate – Wheel Half	6	53	2
53–7950	Shaft – Intermediate	6	67	1
54–9190	Locknut	4	12	2
55–3575	Cap – Gas	9	3	1
55–8010	Sleeve – Gear	5	34	1
55–8020	Retainer – Key	5	29	1
56–6160	Flywheel	4	7	1
56–6170	Drum – Brake	4	8	1
56–6180	Pulley Driver	4	19	1
60–8870	Yoke – Shift	5	23	1
61–8062	Engine – Complete	3	2	1
61–8300	Pivot Arm Assembly	1	1	2
62–3830	Washer – Thrust, Keyed	5	45	2
62–3980	Sleeve	3	9	2
62–4280	Spacer – Blade	4	11	1
62–7600	Decal – Fuel	9	9	1
63–9060	Decal – Danger	7	4	1
63–9330	Body – Air Cleaner	3	6	1
63–9340	Cover – Air Cleaner	3	12	1
63–9380	Filter – Foam	3	11	1
65–5280	Retainer – Spring	1	35	1
66–0570	Guide – Belt	3	17	1
66–7460	Bulb – Primer	3	14	1
66–7560	Spring Arm Ass'y – Front	2	46	2
66–7561	Spring Arm Assy. – Rear	5	5	2
66–9300	Screw – Hex Flange Hd.	3	15	4
68–9780	Bearing	4	28	2
70–1160	Washer – P.M.	4	29	1
71–1260	Decal – Proline	3	1	1
71–9280	Filter – Fuel	9	11	1
71–9310	Spacer	8	11	1
71–9320	Spacer	8	19	1
71–9350	Bracket – Spring	1	11	1
71–9370	Decal – Danger Covers	2	44	1
74–1640	Cover – Wheel	6	59	2
74–1650	Spacer – Wheel	6	58	2
74–1720	Wheel & Tire Assembly	6	*	2
74–1741	Bracket – Traction Adj.	1	31	1
74–1750	Bracket – Traction, Engage	5	17	1

*Not Illustrated

TORO PART NUMBER INDEX (Cont.)

Part No.	Description	Pg. No.	Ref. No.	Qty.
74-1760	Gear – Bevel	6	63	1
74-1770	Cover – Belt	1	29	1
74-1810	Washer	6	61	2
74-1851	Pivot Arm Assembly	5	2	2
74-1861	Gear Case Assembly	6	*	1
74-1890	Shaft – Output	5	8	1
74-1920	Case – Lower	5	40	1
74-1960	Lever – Shift	5	22	1
74-1970	Decal – Traction Adj.	2	65	1
74-2110	Bracket – Tank	9	1	1
76-4570	Plate – Latch	1	16	1
76-4640	Latch – Plug	1	22	1
76-4650	Grip – Latch	1	23	1
76-4660	Spring	1	13	1
77-0040	Decal – Recoil	3	3	1
77-0200	Door Assembly	1	15	1
77-0500	Plug – Discharge	1	21	1
77-0520	Support – Bracket	9	8	1
77-2840	Retainer – Fuel Tank	9	2	1
80-2770	Cup – Anti-Scalp	4	13	1
80-3770	Retainer – Door	1	14	1
81-0090	Gasket	16	2	1
81-0090	Gasket	3	4	1
81-0181	Spark Plug	13	7	1
81-0200	Spark Arrester (Optional)	12	2	1
81-0220	Bushing – Choke	16	5	1
81-0230	Spring – Choke	16	4	1
81-0240	Valve – Choke	16	3	1
81-0250	Shaft – Throttle	16	8	1
81-0260	Valve – Throttle	16	9	1
81-0270	Screw – Throttle	16	10	1
81-0520	Pin – Crankcase	11	20	2
81-0540	Bolt	14	13	1
81-0540	Bolt 30mm Lg.	11	15	5
81-0560	Plate – Mounting	11	19	1
81-0570	Bolt	11	18	4
81-0590	Piston Ring Set	11	2	1
81-0600	Pin – Wrist	11	4	1
81-0610	Bearing – Wrist Pin	11	17	1
81-0620	Circlip	11	3	2
81-0690	Bearing – Upper 20mm	11	8	1
81-0700	Bearing – Lower 25mm	11	12	1
81-0710	Washer – Thrust, Upper	11	7	1
81-0720	Seal – Oil, Upper	11	6	1
81-0730	Washer – Thrust, Lower	11	13	1
81-0740	Seal – Oil, Lower	11	14	1
81-0750	Bracket – Arm, Governor	11	11	1
81-0760	Pin – Crankshaft	11	16	1
81-0770	Spacer – Governor	11	10	1
81-0780	Gasket – Carburetor	16	12	3
81-0850	Seal – Shaft, Governor	14	22	1
81-0860	Washer	14	23	1
81-0870	Ring – Retaining	14	24	1
81-0900	Nut	14	10	2
81-0910	Rod – Carburetor	14	26	1
81-0920	Spring – Carburetor Rod	14	1	1
81-0970	Float	16	20	1
81-1010	Gasket – Bowl, Float	16	21	1
81-1020	Gasket – Capscrew, Bowl	16	23	1
81-1030	Jet – Pilot #40	16	11	1
81-1060	Jet – Main #75	16	19	1
81-1080	Gasket – Muffler	12	1	1
81-1100	Bolt	12	6	2
81-1110	Nut	12	8	2
81-1120	Washer – Lock	12	7	2
81-1140	Screw – Phillips Hd.	12	10	2
81-1150	Bolt – Self Tapping	12	9	1
81-1170	Bolt – Self Tapping	14	12	1
81-1210	Pulley – Rope	15	6	1
81-1220	Spring – Dog	15	12	1
81-1230	Dog – Starter	15	13	1
81-1240	Spring – Compression	15	11	1
81-1250	Retainer – Dog	15	14	1
81-1260	Bolt – Shoulder	15	15	1
81-1270	Rope	15	5	1
81-1280	Bolt	15	9	4
81-1300	Bolt	15	3	3
81-1330	Nut	13	2	1
81-1450	Washer – Lock	14	9	1
81-1480	Clamp	13	6	1
81-1500	Cap Assembly – Spark Plug	13	10	1
81-1630	Handle – Recoil	15	4	1
81-1710	Lever – Choke	14	20	1
81-1730	Bolt – Bracket, Throttle	14	21	1
81-1750	Washer – Lever, Choke	14	8	2
81-1830	Insulator – Kill Switch	14	14	1
81-1840	Terminal – Kill Switch	14	11	1
81-1950	Shaft – Choke	16	7	1
81-2030	Starter Assembly	15	*	1
81-2080	Cover – Fan, Cooling	15	1	1
81-2100	Case – Starter	15	8	1
81-2120	Guard – Spark Plug	13	8	1
81-2140	Piston – 58mm	11	5	1
81-2160	Screw – Choke Plate	16	6	2
81-2170	Cup – Pulley, Starter	15	2	1
81-2300	Spring & Retainer Assembly	15	*	1
81-2340	Jet – Main #72.5 High Alt.	16	*	A/R
81-2350	Bolt – Self Tapping	13	9	2
81-2370	Key – Flywheel	13	4	1
81-2430	Clamp – Cable	14	18	1
81-2450	Cover – Muffler	12	5	1
81-2460	Spring – Lever, Choke	14	5	1
81-2470	Spacer – Lever, Choke	14	17	1
81-2520	Carburetor Assy. Complete	16	*	1
81-2530	Seal	16	25	2
81-2540	Ring	16	26	1
81-2550	Packing	16	27	1
81-2580	Spring – Idle Stop	16	15	1
81-2600	Pin – Float	16	17	1
81-2800	Crankcase/Cylinder Assy.	11	1	1
81-2810	Flywheel – Magneto	13	3	1
81-2820	Coil/Ignition Assembly	13	5	1
81-2830	Spring – Governor	14	25	1
81-2850	Lever – Governor	14	7	1
81-2880	Shaft – Governor	14	4	1
81-4530	Rivet – Kill Switch	14	16	2
81-4910	Needle Valve	16	18	1
81-5410	Rod – Choke	14	3	1
81-5420	Governor Arm/Bolt Assy.	14	2	1
81-5430	Carburetor Ass'y w/Primer	16	*	1
81-5440	Insulator – Carburetor	16	14	1
81-5450	Stud Bolt, Carburetor	16	1	2
81-5490	Shield – Carburetor	16	13	1
81-5660	Bowl – Float	16	22	1
81-5670	Capscrew – Bowl	16	24	1
81-5680	Screw – Cap, Hex Hd.	13	1	2
81-5690	Muffler	12	4	1
81-5770	Bracket – Throttle	14	15	1
81-5780	Spacer – Lever, Governor	14	6	1
81-5810	Needle Valve Kit	16	*	1
81-5830	Crankshaft/Connecting Rod	11	9	1
82-8460	Tank – Gas	9	4	1
82-9150	Chute – Discharge	1	9	1
84-8361	Latch – Handle L.H.	7	15	1
84-8401	Latch – Handle R.H.	7	*	1
84-8860	Handle	7	1	1
84-8870	Guide – Spring	2	41	1
84-8880	Bracket – Spring	2	38	1
84-8930	Retainer – Shield	9	15	3
84-8940	Bar – Control	8	4	1
84-8990	Lever – BBC	8	17	1
84-9000	Lever – Traction	8	15	1
84-9030	Spacer – Control Bracket	8	5	1
84-9040	Pin – Cable	2	37	1

*Not Illustrated

TORO PART NUMBER INDEX (Cont.)

Part No.	Description	Pg. No.	Ref. No.	Qty.
84–9040	Pin – Cable	8	13	1
84–9050	Pin _ Spring Guide	2	40	1
84–9100	Spring – BBC	1	36	1
84–9110	Cable – Clutch	8	23	1
84–9120	Cable – Traction	8	22	1
84–9130	Arm – Idler	4	21	1
84–9160	Base – Tank	9	12	1
84–9180	Brake Plate	4	23	1
85–6720	Decal – Proline	7	8	1
85–6730	Decal – Panel	7	5	1
85–6750	Spring – Control	8	18	1
85–6760	Cable – Throttle	8	25	1
85–6770	Control – Throttle	8	20	1
85–6780	Retainer – Throttle Control	8	24	1
85–6880	Spring – Torsion Lower	4	30	1
86–9320	Bushing – Nylon Flange	8	16	1
91–2255	Stiffener – Blade	4	14	1
92–1720	Plate – Kicker	2	62	1
92–1730	Kicker	1	6	1
92–1750	Plate – Kicker	1	24	1
92–1778	Bracket – Control	8	7	1
92–1796	Decal – Recycler	2	61	1
2412–95	Clamp – Fuel Line	9	5	4
252–103	Bearing – Closed	6	69	2
257–3	Washer – Pivot	2	56	2
302–26	Fitting – Grease	5	6	2
302–63	Fitting – Grease	5	13	1
321–2	Screw – Hex Hd. Cap	2	55	8
321–2	Screw – Hex Hd. Cap	6	48	8
321–7	Screw – Hex Hd. Cap	1	18	2
322–6	Hex Hd. Capscrew	4	24	1
322–6	Screw – Hex Hd. Cap	7	12	2
322–7	Screw – Hex Hd. Cap	7	10	2
322–19	Screw – Hex Hd. Cap	8	9	1
323–6	Screw – Hex Hd. Cap	2	63	2
323–7	Screw – Hex Hd. Cap	9	16	2
323–12	Screw – Hex Hd. Cap	2	53	2
323–13	Screw – Cap, Hex. Hd.	6	57	2
3250–14	Screw – Pan Hd.	8	26	4
3256–16	Washer	3	7	1
3256–22	Washer – Flat	1	19	2
3256–23	Washer – Plain	4	3	1
3256–45	Washer – Flat	6	75	1
3257–1	Key – Woodruff	6	74	2
3257–17	Key – Woodruff	4	6	1
3272–1	Pin – Cotter	8	12	1
3272–1	Pin – Cotter	1	25	2
3285–19	Pin – Groove	5	35	1
3290–378	Tie – Cable	8	1	2
3290–378	Tie – Cable	1	26	1
3290–422	Nut – Push, Washer Cap	10	2	2
3290–456	Washer – Flat	7	13	4
3295–35	Rivet	1	28	1
3296–2	Nut – Lock	8	21	4
3296–5	Nut – Lock	5	16	1
3296–6	Nut – Lock	2	59	2
3296–29	Nut – Lock	8	6	1
3296–29	Nut – Lock	7	16	4
3296–33	Locknut	4	15	1
3296–39	Nut – Lock	4	10	2
3296–42	Nut – Lock	9	7	1
3296–42	Nut – Lock	8	8	1
3296–42	Nut – Lock	1	20	10
3296–42	Nut – Lock	6	54	8
3296–47	Locknut	4	20	1
3296–47	Nut – Lock	7	17	2
3296–58	Nut – Hex Flange	8	14	1
32104–76	Screw – Self Tapping	7	7	6
32104–96	Screw – Self Tap Hex Hd.	4	32	1
32104–107	Screw – Self Tap Hex Hd.	4	2	1
32111–7	Nut – Acorn	7	9	2
32121–99	Pin – Roll	5	19	1
32144–70	Screw – Thr'd Form	3	16	2
32144–70	Screw – Thread Forming	1	32	1
32144–111	Screw – Pan Hd.	1	5	6
32151–36	Ring – Retaining	6	62	2
32151–57	Ring – Retaining	6	70	1
32151–68	Ring – Klip	5	47	4
32152–2	Nut – Lock	2	57	2
32152–2	Nut – Lock	6	60	2

*Not Illustrated

PRODUCT CHANGES

In an effort to make improvements available to TORO owners as quickly as possible, minor changes are incorporated into Toro's products from time to time that do not become immediately shown in the Parts Catalog. If such a change has been made in your unit, which is not reflected in your manual, see your TORO Distributor or his Authorized TORO Service Dealer for information and part numbers.

COUNTRIES OTHER THAN THE UNITED STATES OR CANADA

Customers who have purchased TORO products exported from the United States or Canada should contact their Toro Distributor (Dealer) to obtain guarantee policies for your country, province or state. If for any reason you are dissatisfied with your Distributor's service or have difficulty obtaining guarantee information, contact the TORO importer. If all other remedies fail, you may contact us at The Toro Company.

MAINTENANCE RECORD

Date								

Compliance with Radio Interference Regulations Certified.
Certifie Conforme au Reglement sur le Brouillage Radioelectrique.

AL-926497

Litho in U.S.A.