FORM NO. 3315-671 Rev. A

TORO®

MODEL NO. 38072–3900001 & UP
MODEL NO. 38073–3900001 & UP

PARTS CATALOG

724 SNOWTHROWER

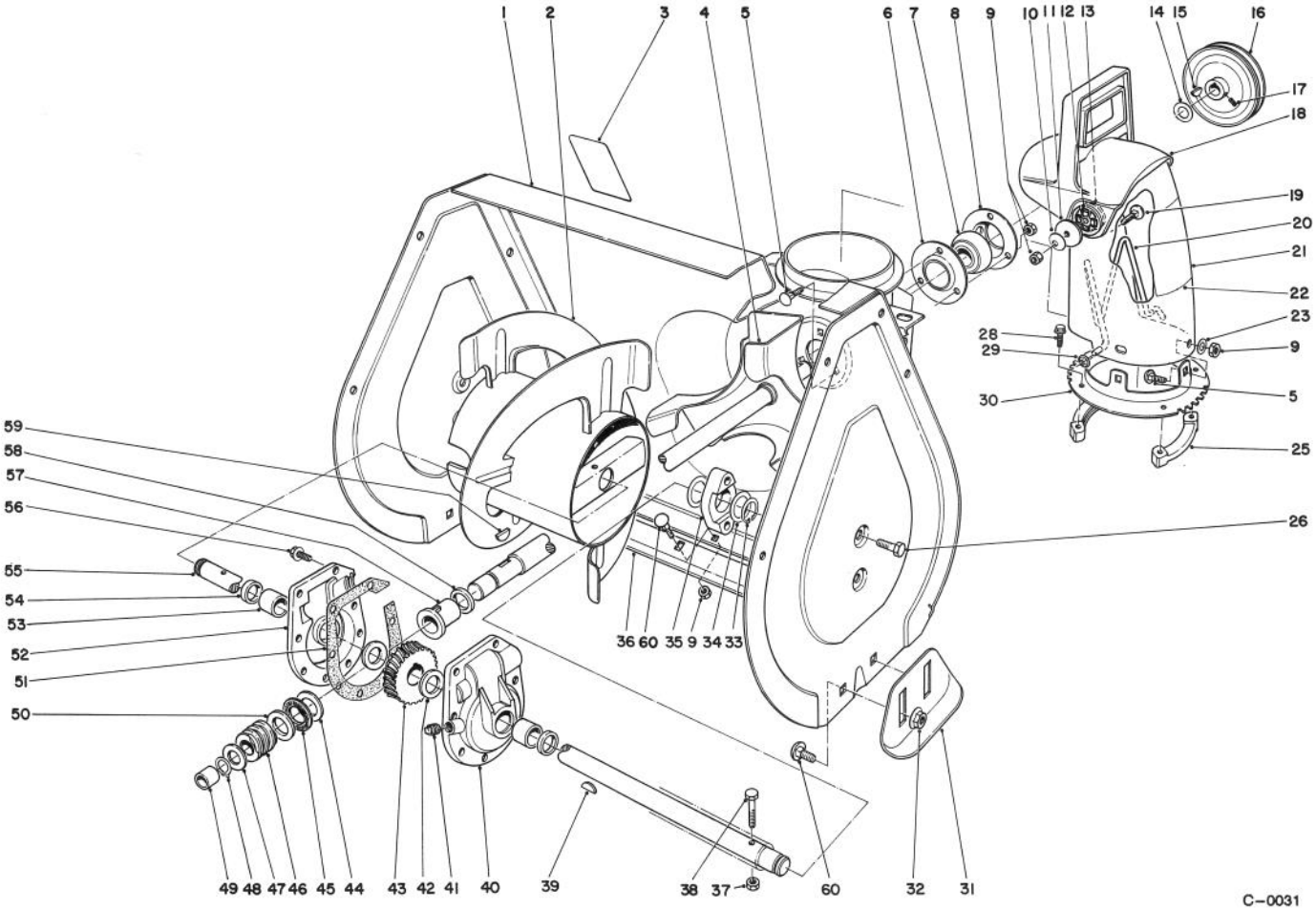

AUGER ASSEMBLY

Ref. No.	Part No.	Description	No. Used
1	14–8119	Housing–Auger (Incl. ref. #3)	1
2	74–1600	Auger – R.H.	1
*	74–1590	Auger – L.H.	1
3	53–7670	Decal – Auger Warning	1
4	37–6990	Shaft & Impeller	1
5	3230–18	Bolt – Carriage	6
6		Flange – Bearing Front	1
7	63–3450	Bearing – Ball	1
8		Flange – Bearing Rear	1
9	3296–29	Nut – Lock	13
10	3290–340	Washer – Belleville	2
11	3256–68	Washer – Flat	2
12	55–8950	Plate – Friction	2
13	20–4320	Washer – Rubber	2
14	3–0737	Washer	1
15	3257–5	Key	1

Ref. No.	Part No.	Description	No. Used
16	37–6890	Pulley	1
17	3242–4	Screw – Set	2
18	56–2680	Deflector	1
19	3230–22	Bolt – Carriage	2
20	56–2670	Chute – Wire	1
21	13–7979	Chute – Discharge Model 38072	1
	12–8749	Chute – Discharge Model 38073	1
22	63–3740	Decal – Discharge Model 38072	1
	63–3760	Decal – Discharge Model 38073	1
23	3256–23	Washer	3
25	37–6490	Retainer – Chute Ring	3
26	32144–70	Screw – Self Tapping	4
28	27–0220	Screw – Self Tapping	6

TPS

© The TORO Company –1992

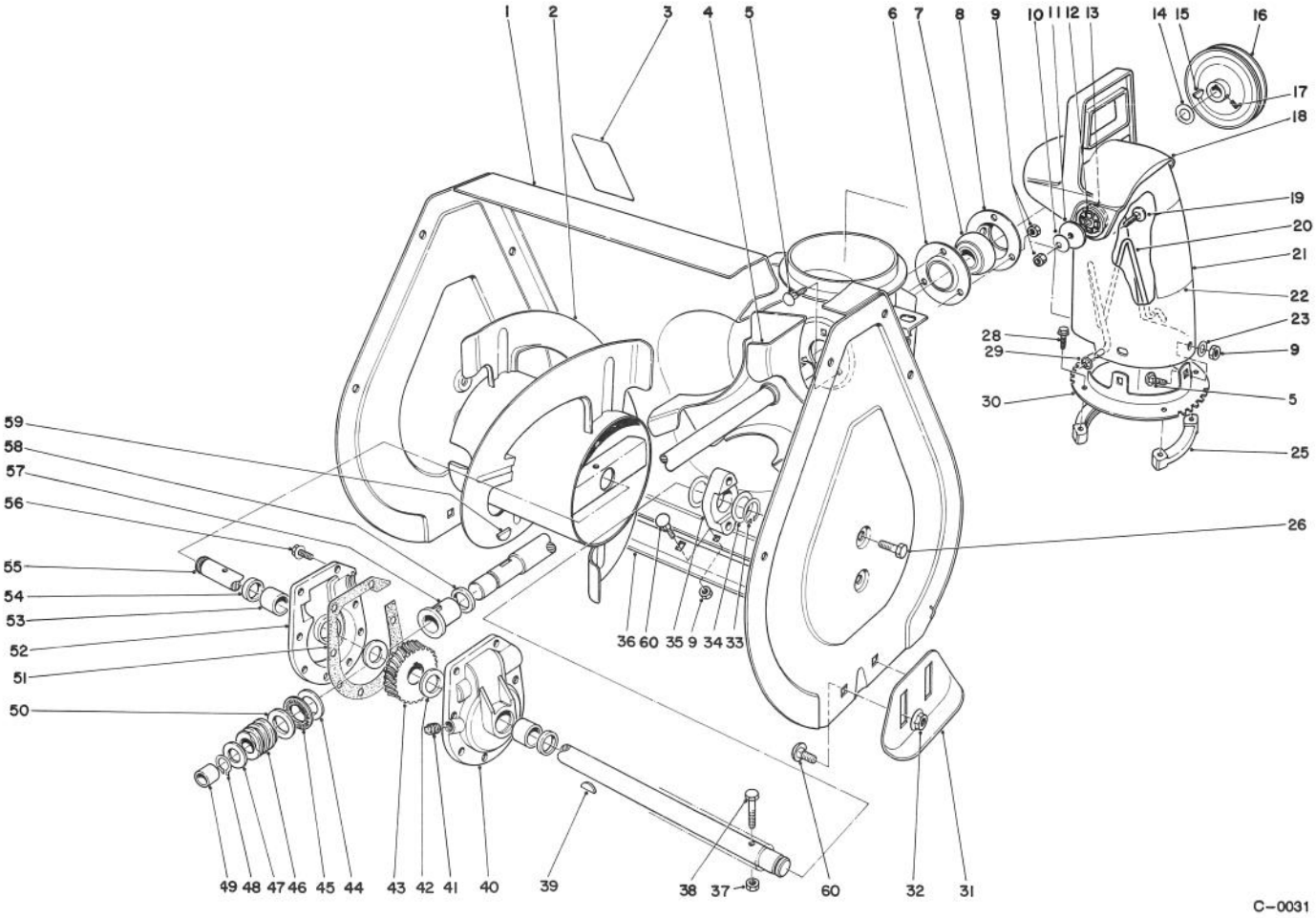

AUGER ASSEMBLY (Continued)

Ref. No.	Part No.	Description	No. Used
29	3290–326	Pushnut	1
30	37–8941	Ring – Chute	1
31	40–8160	Skid	2
32	32128–20	Nut – Flange	4
33	32151–36	Ring – Retaining	2
34	5–1550	Washer – Thrust	4
35	37–6550	Bearing – Auger	2
36	74–1420	Blade – Scraper	1
37	3296–42	Nut – Lock	2
38	321–10	Screw – Cap	2
39	3257–33	Key – Woodruff	1
40	14–2459	Gear Case L.H. (Incl. ref. #53 & 54)	1
41	281–1	Pipe – Plug	1
42	252–71	Bearing – Thrust	2
43	5–7180	Gear	1
44	257–3	Washer – Thrust	1
45	252–76	Bearing – Needle, Thrust	1
46	5–7170	Gear – Worm	1

Ref. No.	Part No.	Description	No. Used
47	3–8664	Washer	1
48	32120–72	Ring – Retaining	1
49	256–32	Bushing	1
50	252–80	Washer – Thrust	1
51	51–0460	Gasket	1
52	14–2449	Gear Case R.H. (Incl. ref. #53 & 54)	1
53	256–237	Bushing	2
54	7–0045	Seal – Oil	2
55	37–6801	Shaft – Auger	1
56	32144–41	Screw – Self Tapping	8
57	37–6560	Bushing – Input	1
58	237–87	Seal	1
59	3257–23	Key – Woodruff	1
60	3230–1	Bolt – Carriage	9
*	37–6961	Gear Case Assembly	1
*	12–8789	Bearing Assembly (Incl. ref. #6–8)	1

*Not Illustrated

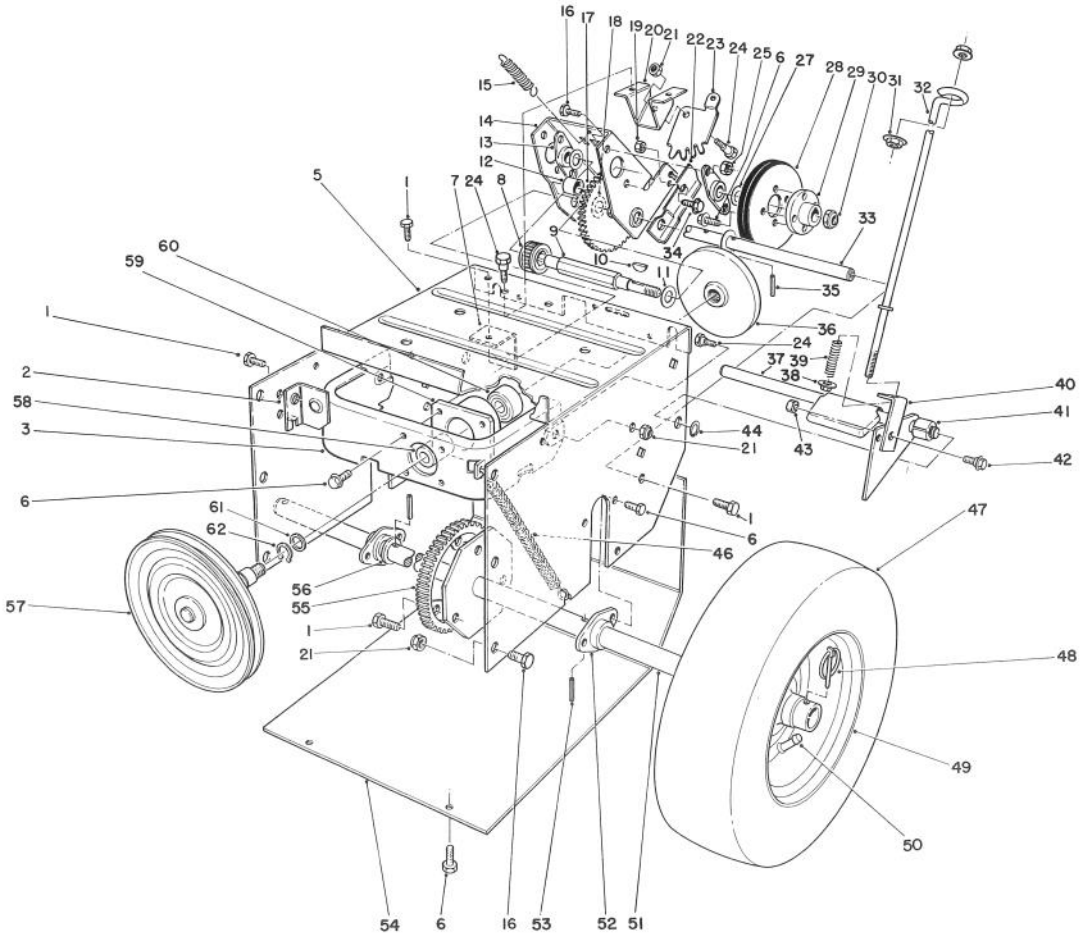

TRACTION ASSEMBLY

Ref. No.	Part No.	Description	No. Used
1	32144–70	Screw – Self Tap.Hex. Hd.	9
2	66–6790	Mount – Clutch Rod Front	1
3	88–0550	Frame – Friction Plate	1
5	37–8900	Frame – Traction	1
6	32144–4	Screw – Self Tap.Hex. Hd.	16
7	37–9070	Mount – Clutch Rod Rear	1
8	37–6500	Gear – Sliding	1
9	37–6780	Shaft – Hex	1
10	3257–24	Key	1
11	5–7570	Washer – Thrust	2
12	256–86	Bushing	1
13	20–1620	Bearing – Friction Wheel	2
14	39–1230	Bracket – Sliding	1
15	37–8880	Spring – Traction Engage	1
16	322–2	Screw – Hex. Hd. Cap	10
17	37–9160	Intermediate Gear & Bushing (Incl. ref. #12)	1
18	10–9280	Washer – Thrust	2
19	3296–16	Nut – Lock	1
20	37–8790	Mount – Quadrant Gear	1
21	3296–29	Nut – Lock	9
22	39–1250	Cam – Receiver	1
23	37–8801	Quadrant – Gear	1

Ref. No.	Part No.	Description	No. Used
24	37–8770	Bolt – Shoulder	3
25	3296–29	Nut – Lock	4
27	36–4790	Washer – Thrust	2
28	37–6570	Wheel – Friction	1
29	39–1520	Hub – Friction Wheel Mount	1
30	3296–48	Nut – Lock	1
31	32128–33	Nut – Flange	2
32	39–3060	Rod – Lower Traction	1
33	37–6760	Shaft – Pivot	1
34	321–4	Screw – Hex. Hd.	1
35	32121–45	Pin – Roll	2
36	38–0800	Plate – Friction	1
37	88–0750	Traction Engagement Assy.	1
38	32128–32	Nut – Flange	1
39	38–4520	Spring – Compression	1
40	38–4490	Bracket – Traction	1
41	40–9680	Spacer	1
42	40–8350	Screw – Shoulder	1
43	3296–42	Nut – Lock	1
44	32151–61	Ring – Retaining	1
46	37–8870	Spring – Friction Plate Frame	1
47	231–120	Tire	2
48	3290–243	Pin – Klik	2

*Not Illustrated

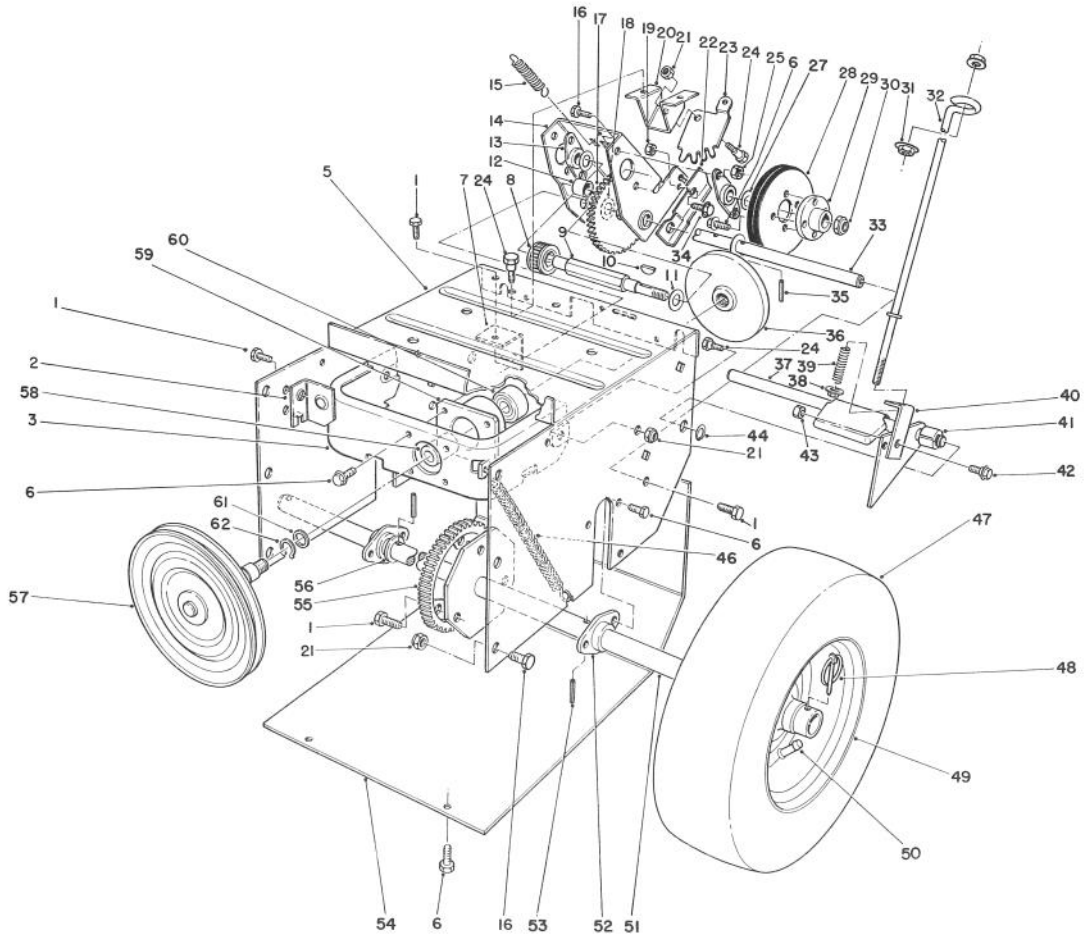

C–1277

TRACTION ASSEMBLY (Continued)

Ref. No.	Part No.	Description	No. Used
49	241–131	Rim	2
50	232–46	Tube	2
51	74–1350	Shaft – Axle	1
52	37–6850	Bearing – Axle	2
53	32121–31	Pin – Roll	2
54	37–6830	Cover – Bottom	1
55	37–6520	Gear – Axle	1
56	3–8664	Washer – Thrust	2

Ref. No.	Part No.	Description	No. Used
57	88–0850	Pulley & Shaft	1
58	256–322	Bushing	1
59	88–0560	Hub – Frame	1
60	38–7820	Bearing	1
61	257–12	Washer – Thrust	1
62	32151–103	Ring – Snap	1
*	56–2700	Tire Chain Kit (Optional)	1

*Not Illustrated

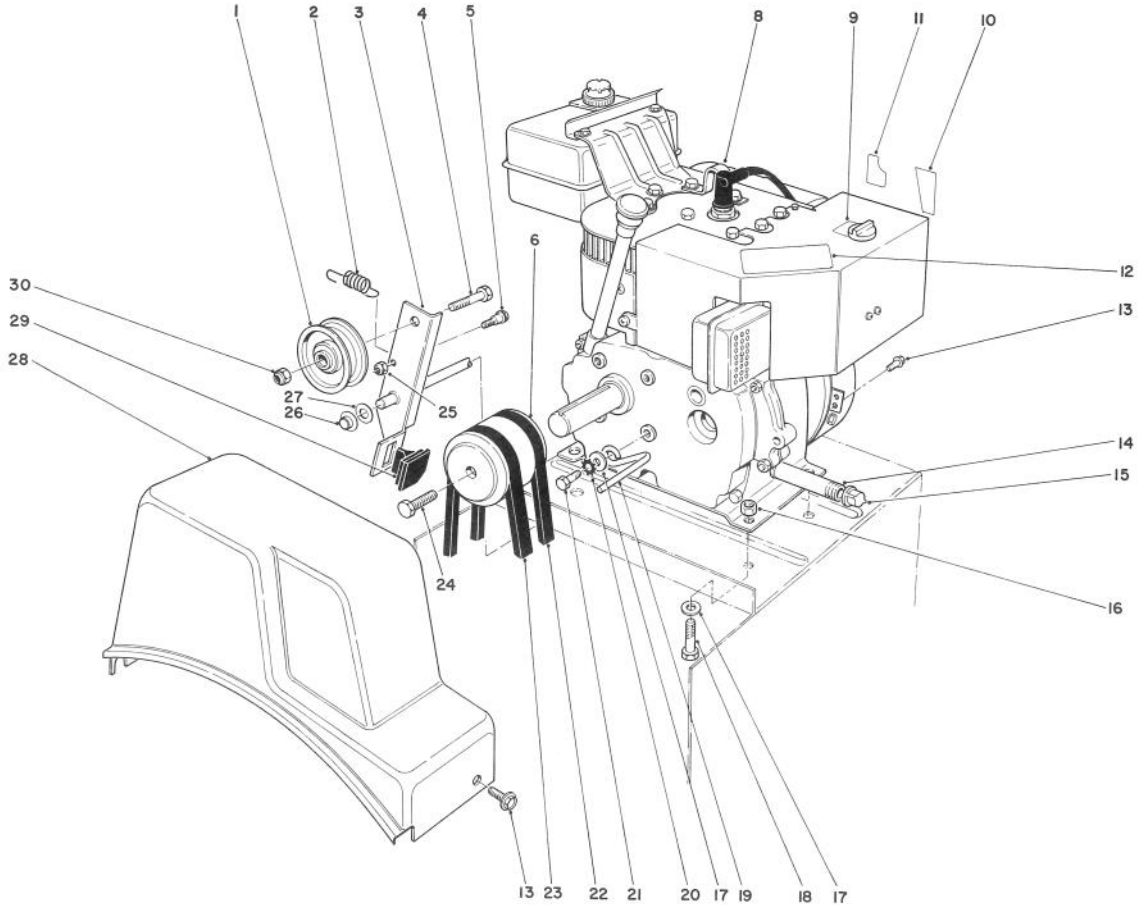

C–1278

ENGINE ASSEMBLY

Ref. No.	Part No.	Description	No. Used
1	3–4244	Idler Pulley	1
2	53–7570	Spring – Auger Disengage	1
3	14–7959	Auger Clutch (Incl. ref. #29)	1
4	323–29	Screw – Cap	1
5	42–3560	Bolt – Shoulder	1
6	74–1370	Engine Pulley	1
8		Engine	1
9	63–2420	Decal – Choke (Model 38072)	1
	63–2430	Decal – Choke (Model 38073)	1
10	63–3190	Decal – Throttle	1
11	62–5760	Decal – Primer	1
12	66–6840	Decal – Hot Surface Warning (Model 38072)	1
	63–2310	Decal – Hot Surface Warning (Model 38073)	1

Ref. No.	Part No.	Description	No. Used
13	32144–4	Screw – Self Tapping	3
14	289–9	Pipe Nipple	1
15	288–2	Cap	1
16	3296–29	Nut – Lock	4
17	3256–23	Washer – Flat	5
18	322–7	Screw – Cap	4
19	37–8990	Retainer – Belt	1
20	3255–8	Washer –Lock Ext. Tooth	1
21	3210–3	Screw – Cap	1
22	37–9090	V–Belt – Traction	1
23	26–9672	V–Belt – Auger	1
24	43–7290	Screw – Special	1
25	3296–56	Nut – Lock	1
26	3290–320	Nut – Push On	1
27	3256–24	Washer – Flat	1
28	37–6900	Cover – Belt	1
29	66–8060	Molded Brake Assembly	1
30	3296–59	Nut – Lock	1

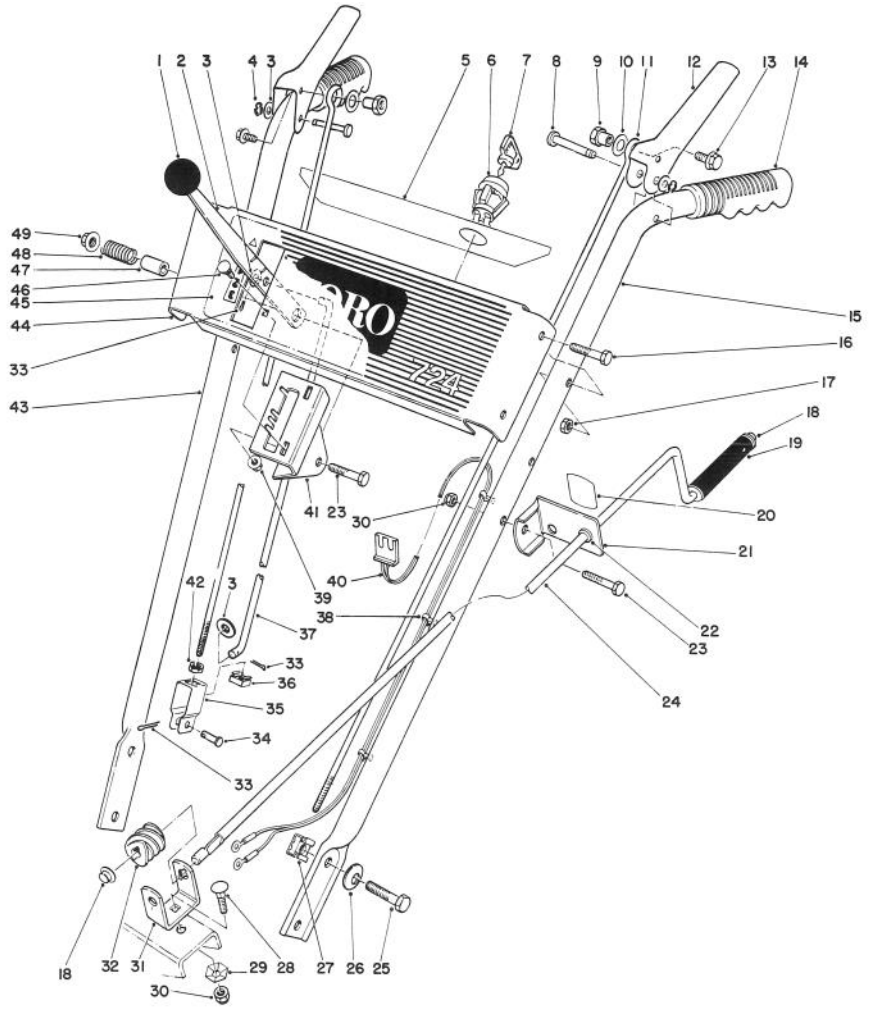

C-1279

HANDLE ASSEMBLY

Ref. No.	Part No.	Description	No. Used
1	233-21	Knob	1
2	37-8821	Selector - Speed	1
3	3256-23	Washer	3
4	32151-73	Ring - Clip	2
5	66-6830	Decal - Escutcheon Back (Model 38072)	1
	66-6880	Decal - Escutcheon Back (Model 38073)	1
6	40-5940	Switch - On/Off	1
7	63-8360	Key - Ignition	1
8	52-5600	Pin - Control Lever	2
9	47-4990	Post - Linkage Mounting	2
10	3256-24	Washer	2
11	52-5590	Link - Upper	2
12	63-3640	Handle - Control	2
13	3234-13	Screw - Hex. Flange Hd.	2
14	74-1360	Grip - Handle	2
15	52-5571	Handle - Left (Model 38072)	1
	52-5570	Handle - Left (Model 38073)	1
16	321-9	Screw - Hex. Hd	4
17	3296-42	Nut - Lock	4
18	3290-320	Nut - Push	2
19	66-6540	Grip - Rod	1
20	63-3510	Decal - Chute Direction	1

Ref. No.	Part No.	Description	No. Used
21	12-7739	Bracket - Chute Control (Incl. ref.# 20 & 22)	1
22	256-249	Nyliner	1
23	322-7	Screw - Hex. Hd.	2
24	40-8270	Rod - Chute Control	1
25	322-2	Screw - Hex. Hd. Cap	4
26	3290-456	Washer - Belleville	4
27	3290-196	Retainer - Nut	4
28	3230-22	Bolt - Carriage	1
29	3290-238	Washer - Pyramidal	1
30	3296-29	Nut - Lock	2
31	40-8280	Bracket - Chute Worm	1
32	40-8250	Gear - Worm	1
33	3272-4	Pin - Cotter	3
34	283-3	Pin - Clevis	1
35	39-3080	Clevis	1
36	32115-5	Retainer - Nut	1
37	74-1490	Rod - Speed Selector	1
38	17-9120	Mount - Wire	3
39	32128-33	Nut - Flange Lock	2
40	43-7390	Wire Harness Assembly	1
41	39-1280	Mount - Speed Selector	1
42	3218-1	Nut - Jam	1

*Not Illustrated

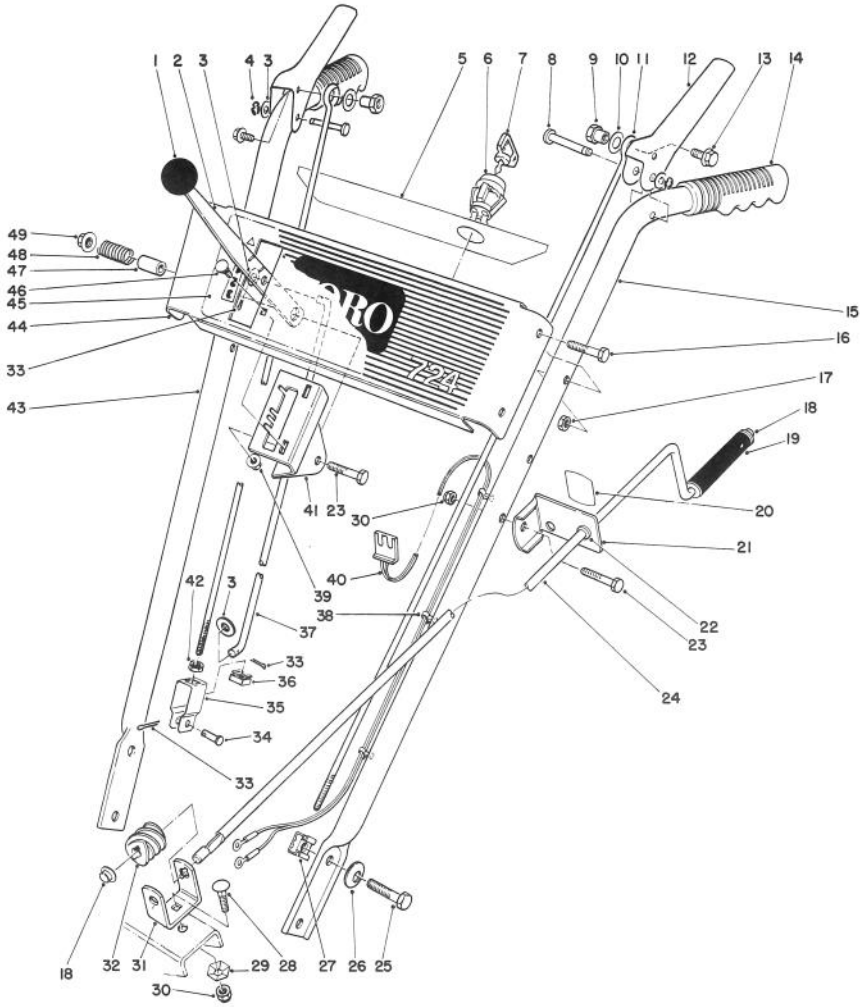

C–1279

HANDLE ASSEMBLY (Cont.)

Ref. No.	Part No.	Description	No. Used
43	52–5561	Handle – Right (Model 38072)	1
	52–5560	Handle – Right (Model 38073)	1
44	43–7360	Panel – Escutcheon	1
45	88–0740	Decal – 724	1

Ref. No.	Part No.	Description	No. Used
46	3229–11	Bolt – Carriage	2
47	40–8130	Spacer – Speed Selector	1
48	37–9150	Spring	1
49	32128–13	Nut – Flange Lock	1
50	3256–24	Washer	1
*	3290–378	Cable Tie	2

ENGINE TECUMSEH MODEL HSK70-130282R

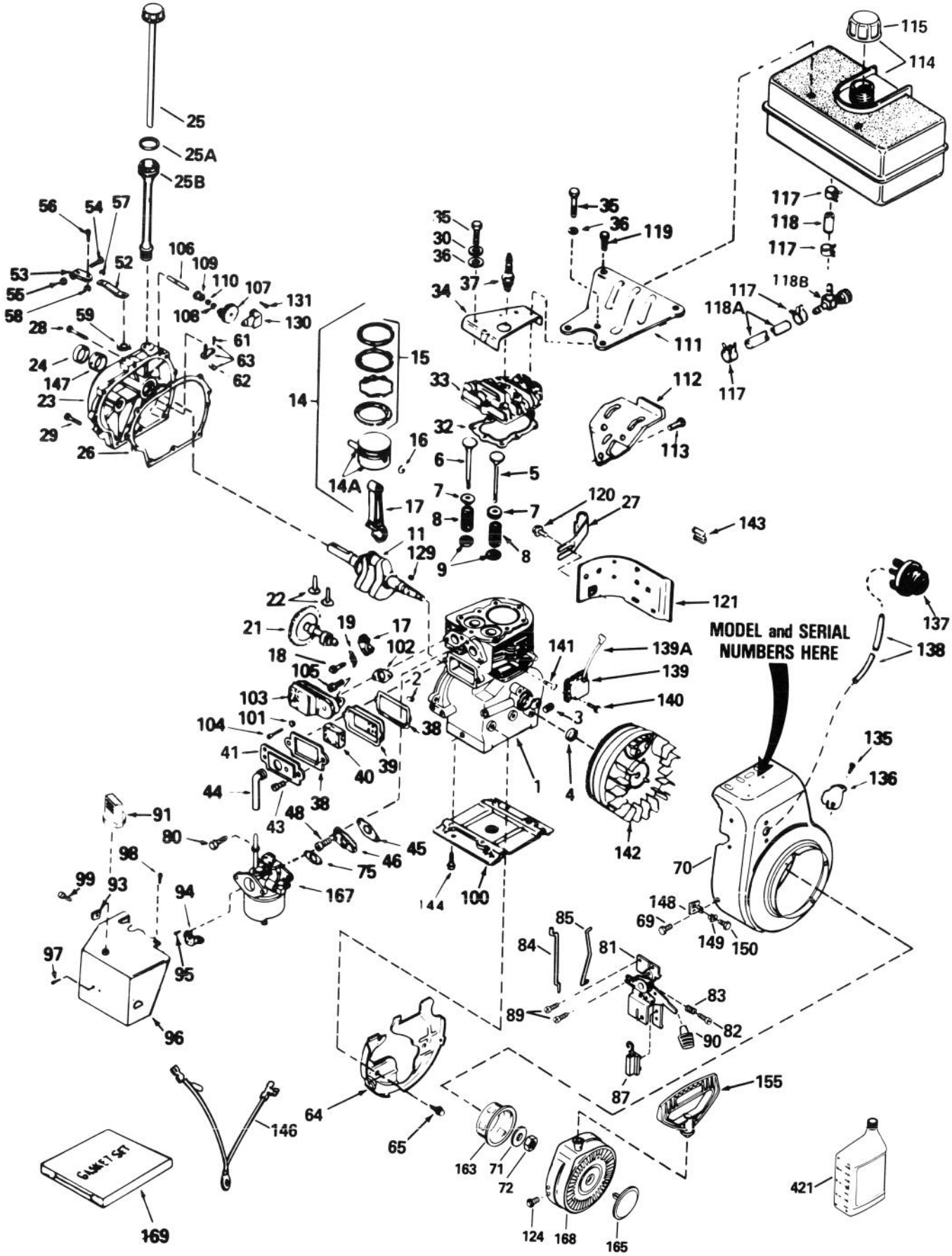

ENGINE TECUMSEH MODEL HSK70-130282R

Ref. No.	Part No.	Description	No. Used
1	32586C	Cylinder Assembly (Incl. ref. #2, 3, & 4)	1
2	27652	Pin – Dowel	2
3	27642	Plug – Pipe	1
4	32630	Seal – Oil	1
5	32783	Valve – Intake, Standard (Incl. ref.# 9)	1
	32784	Valve – Intake 1/32" oversize (Incl. ref.# 9)	1
6	27878A	Valve –Exhaust, Standard (Incl. ref.# 9)	1
	27880A	Valve –Exhaust 1/32" oversize (Incl. ref.# 9)	1
7	27882	Cap – Upper Valve Spring	2
8	27881	Spring – Valve	2
9	32581	Cap – Lower Valve Spring	2
11	35272	Crankshaft Assembly	1
14	34517	Piston – Pin & Ring Assy. Standard (Incl. ref. #14A, 15 & 16)	1
	34518	Piston – Pin & Ring Assy. (.010 oversize) (Incl. ref. #14A, 15 & 16)	1
	34519	Piston – Pin & Ring Assy. (.020 oversize) (Incl. ref. #14A, 15 & 16)	1
14A	32592B	Piston & Pin Assy. Standard (Incl. ref. #16)	1
	32593B	Piston & Pin Assembly .010 oversize (Incl. ref. #16)	1
	32594B	Piston & Pin Assembly .020 oversize (Incl. ref. #16)	1
15	32595	Ring Set – Piston Std.	1
	32596	Ring Set – Piston .010 oversize	1
	32597	Ring Set – Piston .020 oversize	1
16	27888	Ring – Piston Pin Retaining	2
17	32591C	Connecting Rod Assembly (Incl. ref. #18 & 19)	1
18	650662C	Bolt – Connecting Rod	2
19	34242	Dipper – Oil	1
21	32115	Camshaft – Extended	1
22	34034	Lifter – Valve	2
23	31303C	Cover – Cylinder (incl. ref.#24, 24A, 106,147)	1
24	28427	Seal – Oil	1
25	35555	Dipstick – Oil	1
25A	35499	"O" Ring	1
25B	35554	Tube Assy. – Oil Fill	1
26	*30684	Gasket – Cylinder Cover	1
27	35540	Clip – Fill Tube	1
28	650488	Screw – Hex Head Sems	7
29	650493	Screw – Hex Head Sems	1
30	650690	Washer – Belleville	3
32	*32631A	Gasket – Cylinder Head	1

Ref. No.	Part No.	Description	No. Used
33	30938A	Head – Cylinder (Incl. 3 of ref.# 35)	1
34	30939A	Cover – Cylinder Head	1
35	650697A	Screw – Hex Flg. Hd.	8
36	650691	Washer – Flat	3
37	35395	Spark Plug – Resistor	1
38	*27896A	Gasket, Valve Spring Cover	2
39	28423	Body Assy. – Breather	1
40	28424	Element – Breather	1
41	28425	Cover – Valve Spring	1
43	650128	Screw – Hex Head Sems	2
44	35350	Tube – Breather	1
45	*27915A	Gasket – Intake	1
46	34712	Flange – Carburetor (Incl. ref. #80)	1
48	30196	Screw – Fil. Head	2
52	33454	Lever – Governor	1
53	29916	Clamp – Governor Lever	1
54	29826	Screw – Hex Washer Hd.	1
55	29216	Locknut – KEPS	1
56	650548	Screw – Hex Washer Hd.	1
57	29918	Lockwasher	1
58	30322	Locknut – KEPS	1
59	29642	Ring – Retaining	1
61	650494	Screw – Fil. Head Sems	1
62	30700	Yoke – Governor	1
63	30699C	Rod Assy. – Governor (Incl. ref.# 61 & 62)	1
64	35326	Baffle – Blower Housing	1
65	650561	Screw – Hex Washer Hd.	2
69	29747B	Screw – Hex Hd. Sems	2
70	36254	Blower Housing	1
71	650815	Washer – Belleville	1
72	650871	Nut – Flywheel	1
75	*31688A	Gasket – Carburetor	1
80	650517	Screw – Hex Head Sems	2
81	34677	Control Assy. – Speed (Incl. ref.#82, 83, 86 & 87)	1
82	650549	Screw – Fil. Hd.	1
83	31342	Spring – Compression	1
84	34661	Link – Governor	1
85	34662	Link – Throttle	1
87	610973	Terminal Assy.	1
89	650821	Screw – Hex Washer Hd.	2
90	35440	Knob – Speed Control	1
91	35439	Knob – Choke	1
93	650764	Nut – U Type	1
94	32398	Bracket – Choke	1
95	28820	Screw – Fil. Head Sems	2
96	35060	Cover – Carburetor	1
97	650257	Screw – Pan Head Sems	2
98	650765	Screw – Hex Washer Hd.	1
99	650760	Screw – Pan Head Taptite	1
100	29538	Base – Engine Mounting	1
101	26073	Washer – Flat	1
102	*35865	Gasket – Muffler	1
103	32401	Muffler	1
104	650694A	Screw – Hex Flg. Head	1

* indicated Parts included in Gasket Set Ref.#169

ENGINE TECUMSEH MODEL HSK70–130282R

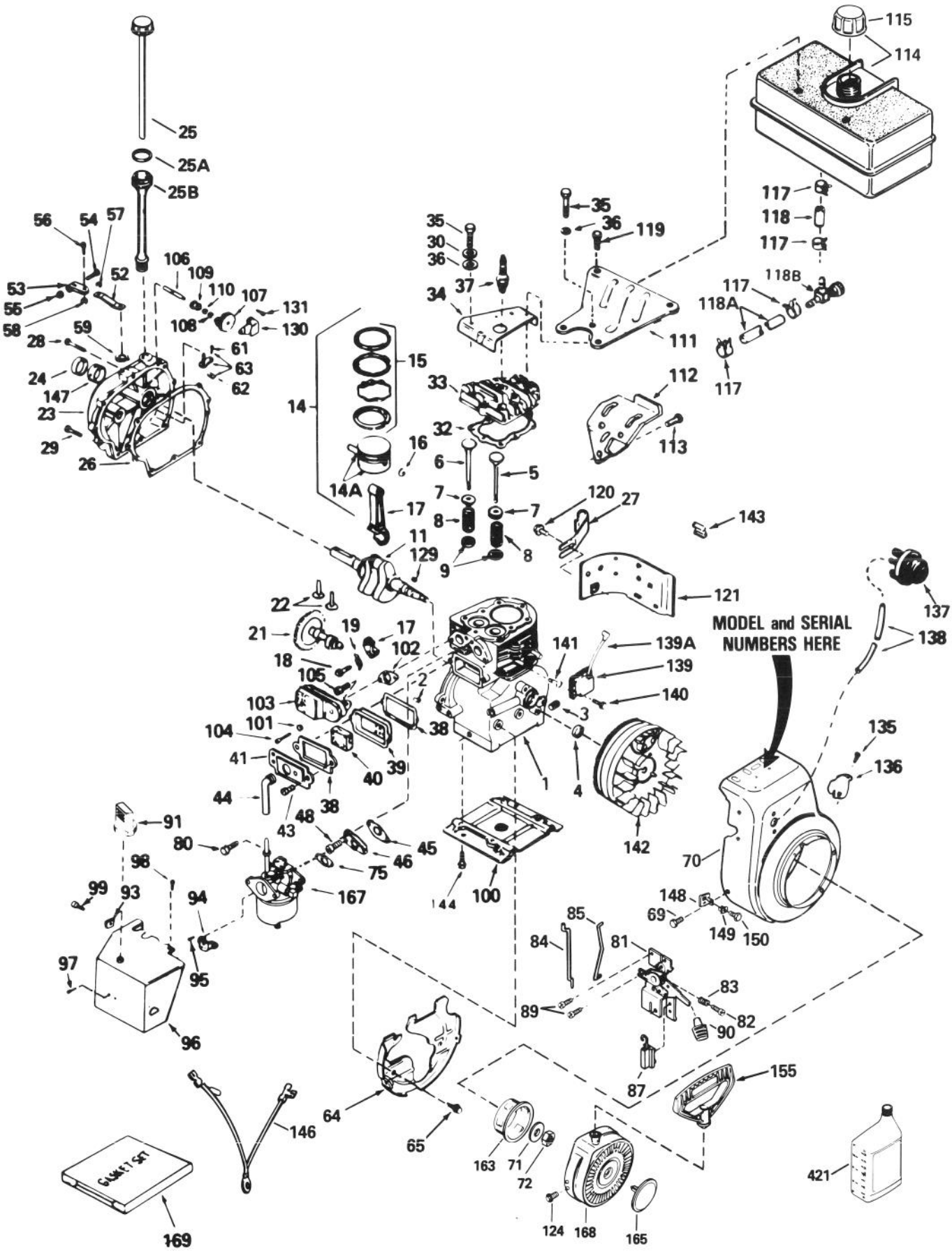

ENGINE TECUMSEH MODEL HSK70-130282R (Cont.)

Ref. No.	Part No.	Description	No. Used
105	30196	Screw – Fil. Head	1
106	31845	Shaft, Mechanical Governor	1
107	30591	Gear Assy. – Governor (Incl. ref.# 110)	1
108	29193	Ring – Retaining	1
109	30588A	Spool – Governor	1
110	30590A	Washer – Flat	1
111	34159	Plate – Fuel Tank Mntg.	1
112	34158	Bracket – Fuel Tank Mntg.	1
113	650561	Screw – Hex Washer Hd.	1
114	34186A	Tank Assembly – Fuel (incl. ref. #115 & 117)	1
115	35355	Cap – Fuel Tank	1
117	26460	Clamp – Fuel Line	4
118	30962	Line – Fuel	1
118A	29774	Line – Fuel	1
118B	35857	Valve – Fuel Shut–Off	1
119	650665	Screw – Hex Washer Hd.	2
120	650128	Screw – Hex Head Sems	1
121	30622A	Extension – Blower Hsng.	1
124	650884	Screw – Hex Washer Hd.	3
129	32589	Key– Flywheel	1
130	31843A	Bracket – Governor Gear	1
131	650836	Screw – Hex Washer Hd.	2

Ref. No.	Part No.	Description	No. Used
135	650760	Screw – Pan Hd. Taptite	1
136	33013	Cover – Starter Bubble	1
137	570682	Primer Assy.	1
138	32180C	Line – Primer	1
139	34443A	Solid State Assembly	1
139A	610118	Cover – Spark Plug	1
140	650814	Screw – Torx Hex Head	2
141	650872	Stud – Solid State	2
142	611085	Flywheel – w/Ring Gear	1
143	29443	Clip – Spring	1
144	650542	Screw – Hex Head	4
146	35253	Wire – Ground	1
147	31546	Bushing – Crankshaft	1
148	34126	Bracket – Grommet Mntg.	1
149	28545	Grommet – Plastic	1
150	650760	Screw – Pan Hd. Taptite	1
155	590574	Handle – Starter	1
163	32125	Cup – Starter	1
165	35392	Plug – Starter	1
167	632371A	Carburetor (Incl. ref. #75)	1
168	590646	Starter – Rewind	1
169	33239A	Gasket Set	1
421	730226	Oil – 4 Cycle, 5W30 (Quart)	1

* indicated Parts included in Gasket Set Ref.#169

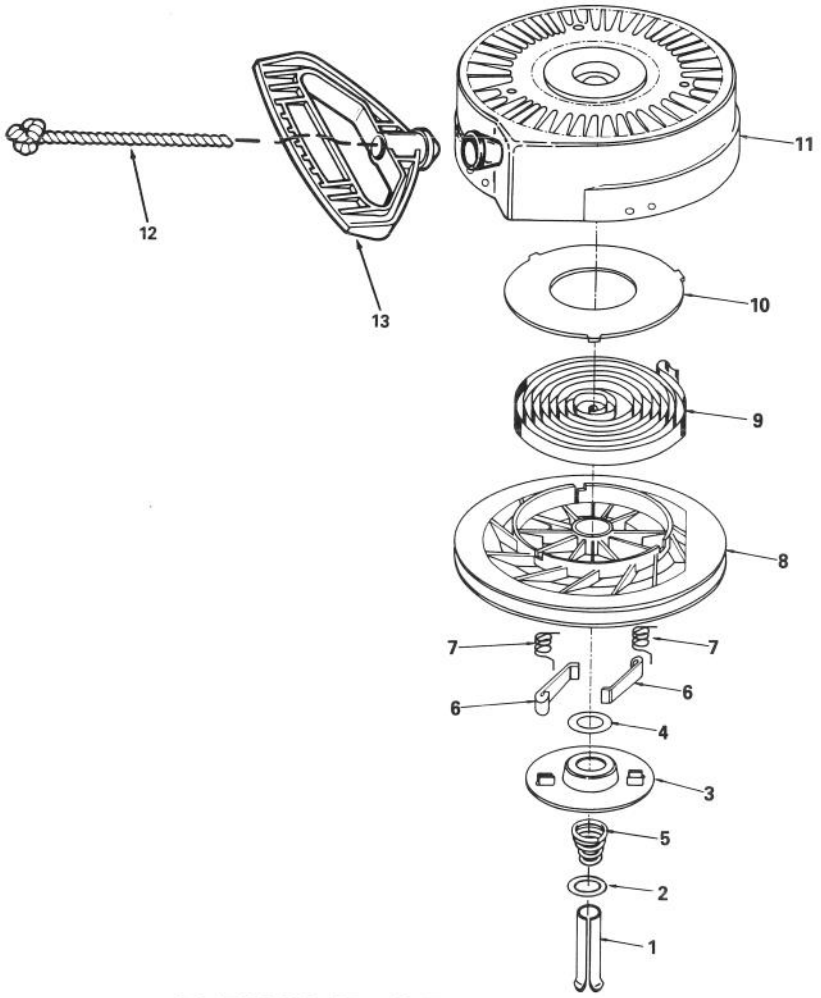

REWIND STARTER NO. 590646

Ref. No.	Part No.	Description	No. Used
1	590599A	Pin – Spring (Incl. Ref. #4)	1
2	590600	Washer	1
3	590615	Retainer	1
4	590601	Washer	1
5	590598	Spring – Brake	1
6	590616	Dog – Starter	2
7	590617	Spring – Dog	2
8	590645	Pulley	1

Ref. No.	Part No.	Description	No. Used
9	590619	Spring – Rewind	1
10	590620	Cover – Spring	1
11	590647	Housing Assembly	1
12	590535	Rope – 9/64" dia. 98"Lg.	1
13	590574	Handle – Mitten Grip (Not included with Starter)	1
*	590646	Starter – Rewind	1

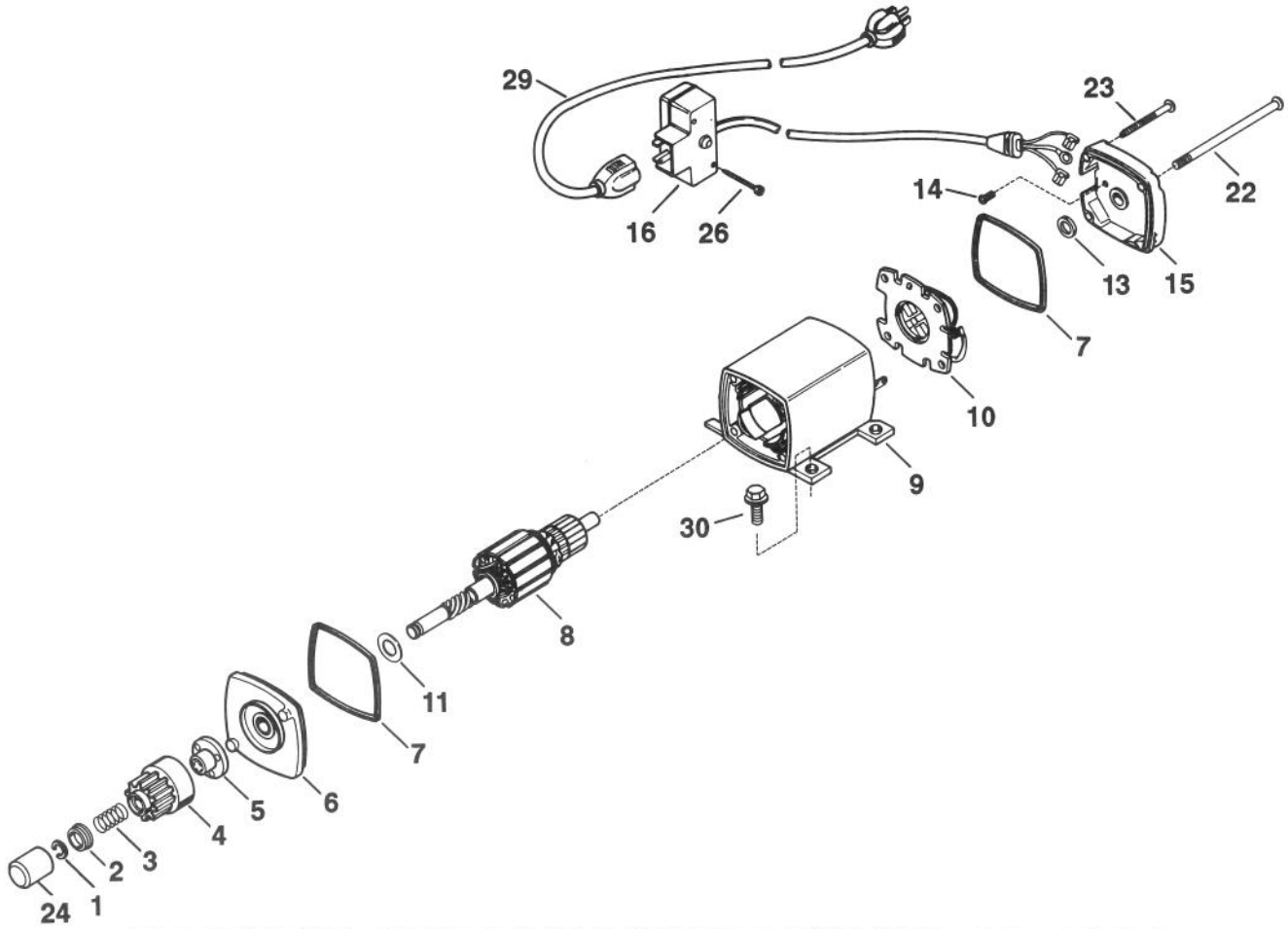

ELECTRIC STARTER MOTOR KIT NO. 38–7590

Ref. No.	Part No.	Description	No. Used
1	33842	Ring – Retainer	1
2	33430	Retainer – Spring	1
3	33431	Spring – Anti–Drift	1
4	33432	Gear	1
5	35913	Nut & Retainer (Incl. ref. #1)	1
6	35449	Cap Assembly – Drive End (Incl. ref. #7)	1
7	35450	"O" Ring	2
8	35914	Armature	1
9	35457A	Housing Assembly	1
10	35452A	Card Assembly – Brush	1
11	35911	Washer – Thrust	1

Ref. No.	Part No.	Description	No. Used
13	590500	Washer – Thrust	1
14	33441	Screw – Ground	1
15	35453	Cap Assy., Commutator End (Incl. ref. #7)	1
16	35454	Box Assembly – Switch (Incl. ref. #26)	1
22	35458	Bolt – Case	2
23	35456	Screw – Grounding	1
24	33451	Cover – Dust	1
26	650819	Screw – Hex. Hd.	2
29	32450B	Cord – Extension, 10' 6"	1
30	30063	Screw – Hex. Hd.	4

Note: Order individual parts from your local Tecumseh dealer.

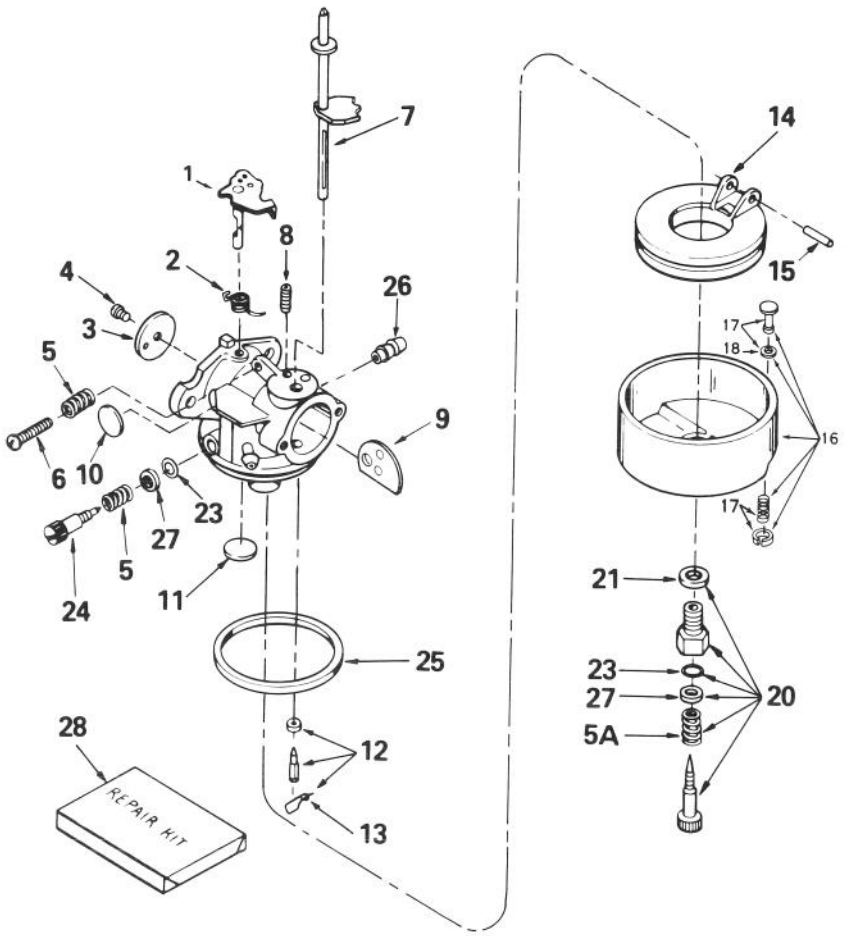

CARBURETOR NO. 632371A

Ref. No.	Part No.	Description	No. Used
1	31834	Shaft & Lever Assembly	1
2	631767	Spring – Throttle Return	1
3	631036	Shutter – Throttle	1
4	650506	Screw	2
5	630766	Spring – Idle Screw	2
5A	630738	Spring	1
6	650417	Screw – Idle	1
7	632373	Shaft & Lever Assy.(Choke)	1
8	630735	Spring – Choke Stop	1
9	632372	Shutter – Choke	1
10	630748†	Plug – Welch	1
11	631027†	Plug – Welch	1
12	631021†	Inlet Needle – Seat & Clip (Incl. Ref. #13)	1
13	631022	Clip – Inlet Needle	1
14	632019	Float – Carburetor	1
15	631024†	Shaft – Float	1

Ref. No.	Part No.	Description	No. Used
16	631951	Bowl – Assembly (Incl. Ref. #17 & 18)	1
17	27136A	Drain Assembly – Bowl (Incl. Ref. #18)	1
18	27554	Gasket – Bow Drain	1
20	31839†	Screw Adjustment Assembly (Incl. Ref. #5A, 21, 23, & 27)	1
21	27110	Gasket – Bowl–to–Body	1
23	630740†	"O" Ring	1
24	631838†	Screw – Idle	1
25	631028†	Gasket – Bowl–to–Body	1
26	632164	Fitting – Fuel Inlet	1
27	630739	Washer – Flat	2
28	31840	Repair Kit (Incl. Items Marked †)	1
*	632371A	Carburetor (Incl. Ref. #1–28)	1

* Not Illustrated

MAINTENANCE RECORD

Date								

PRODUCT CHANGES

In an effort to make improvements available to TORO owners as quickly as possible, minor changes are incorporated into Toro's products from time to time that do not become immediately shown in the Parts Catalog. If such a change has been made in your unit, which is not reflected in your manual, see your TORO Distributor or his Authorized TORO Service Dealer for information and part numbers.

COUNTRIES OTHER THAN THE UNITED STATES OR CANADA

Customers who have purchased TORO products exported from the United States or Canada should contact their Toro Distributor (Dealer) to obtain guarantee policies for your country, province or state. If for any reason you are dissatisfied with your Distributor's service or have difficulty obtaining guarantee information, contact the TORO importer. If all other remedies fail, you may contact us at The Toro Company.

MAINTENANCE RECORD

Date								

Compliance with Radio Interference Regulations Certified.
Certifie Conforme au Reglement sur le Brouillage Radioelectrique.

Litho in U.S.A.