Form No. 3359-466 Rev B

TORO®

Count on it.

Operator's Manual

HD53 Commercial Lawn Mower

Model No. 22164TE—Serial No. 280000001 and Up

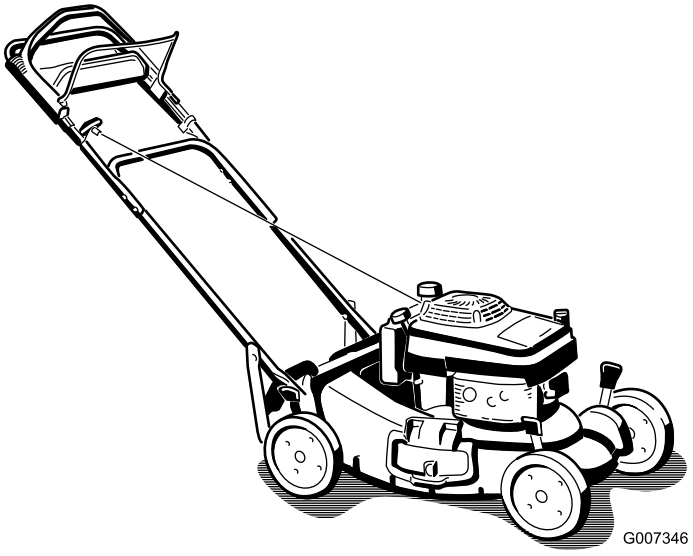

G007346

Register at www.Toro.com.

CE

Original Instructions (EN)

Introduction

Read this information carefully to learn how to operate and maintain your product properly and to avoid injury and product damage. You are responsible for operating the product properly and safely.

You may contact Toro directly at www.Toro.com for product and accessory information, help finding a dealer, or to register your product.

Whenever you need service, genuine Toro parts, or additional information, contact an Authorized Service Dealer or Toro Customer Service and have the model and serial numbers of your product ready. Figure 1 identifies the location of the model and serial numbers on the product. Write the numbers in the space provided.

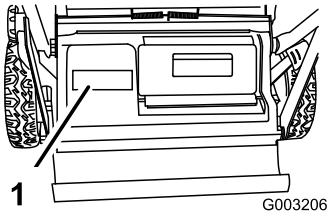

Figure 1

1. Model and serial number plate

Model No. _____

Serial No. _____

This manual identifies potential hazards and has safety messages identified by the safety alert symbol (Figure 2), which signals a hazard that may cause serious injury or death if you do not follow the recommended precautions.



Figure 2

1. Safety alert symbol

This manual uses 2 words to highlight information. **Important** calls attention to special mechanical information and **Note** emphasizes general information worthy of special attention.

Contents

Introduction 2
Safety 3
- General Lawn Mower Safety 3
- Sound Pressure 4
- Sound Power 4
- Vibration, Hand/arm 4
- Safety and Instructional Decals 5

Setup 6
- 1 Installing the Handle 6
- 2 Filling the Crankcase with Oil 7
- 3 Adjusting the Handle Height 7

Product Overview 8
Operation 8
- Checking the Engine Oil Level 8
- Filling the Fuel Tank with Gasoline 9
- Starting the Engine 10
- Stopping the Engine 11
- Using the Self-propel Drive 11
- Adjusting the Cutting Height 12
- Recycling the Clippings 12
- Side-discharging the Clippings 13
- Installing the Grass Bag 14
- Operating Tips 14

Maintenance 16
- Recommended Maintenance Schedule(s) 16
- Lubrication 17
  - Lubricating the Wheel Gears 17
- Engine Maintenance 17
  - Servicing the Air Filter 17
  - Changing the Engine Oil 18
  - Servicing the Spark Plug 18
- Fuel System Maintenance 19
  - Emptying the Fuel Tank and Cleaning the Fuel Filter 19
- Blade Maintenance 19
  - Maintaining the Cutting Blade 19
- Cleaning 21
  - Cleaning under the Mower Housing 21

Storage 22
- Preparing the Fuel System 22
- Preparing the Engine 22
- General Information 22
- Removing the Lawn Mower from Storage 22

Troubleshooting 23

© 2008—The Toro® Company
8111 Lyndale Avenue South
Bloomington, MN 55420

Contact us at www.Toro.com.
Printed in the USA
All Rights Reserved

Safety

Improperly using or maintaining this mower can result in injury. To reduce the potential for injury, comply with these safety instructions.

Toro designed and tested this mower for reasonably safe service; however, failure to comply with the following instructions may result in personal injury.

To ensure maximum safety, best performance, and to gain knowledge of the product, it is essential that you and any other operator of the mower read and understand the contents of this manual before the engine is ever started. Pay particular attention to the safety alert symbol (Figure 2) which means Caution, Warning, or Danger—"personal safety instruction." Read and understand the instruction because it has to do with safety. Failure to comply with the instruction may result in personal injury.

General Lawn Mower Safety

The following instructions have been adapted from the ISO standard 5395.

This cutting machine is capable of amputating hands and feet and throwing objects. Failure to observe the following safety instructions could result in serious injury or death.

Training

- Read the instructions carefully. Be familiar with the controls and the proper use of the equipment.
- Never allow children or people unfamiliar with these instructions to use the mower. Local regulations can restrict the age of the operator.
- Keep in mind that the operator or user is responsible for accidents or hazards occurring to other people or their property.
- Understand explanations for all pictograms used on the mower or in the instructions.

Gasoline

WARNING-Gasoline is highly flammable. Take the following precautions.

- Store fuel in containers specifically designed for this purpose.
- Refuel outdoors only and do not smoke while refueling.
- Add fuel before starting the engine. Never remove the cap of the fuel tank or ad gasoline while the engine is running or when the engine is hot.
- If gasoline is spilled, do not attempt to start the engine but move the mower away from the area of spillage and avoid creating any source of ignition until gasoline vapors have dissipated.
- Replace all fuel tank and container caps securely.

Preparation

- While mowing, always wear substantial footwear and long trousers. Do not operate the equipment when barefoot or wearing open sandals.
- Thoroughly inspect the area where the equipment is to be used and remove all stones, sticks, wires, bones and other foreign objects.
- Before using, always visually inspect to see that guards, and safety devices, such as deflectors and/or grass catchers, are in place and working correctly.
- Before using, always visually inspect to see that the blades, blade bolts and cutter assembly are not worn or damaged. Replace worn or damaged blades and bolts in sets to preserve balance.

Starting

- Disengage all blade and drive clutches and shift into neutral before starting the engine.
- Do not tilt mower when starting the engine or switching on the motor, unless the mower has to be tilted for starting. In this case, do not tilt it more than absolutely necessary and lift only the part, which is away from the operator.
- Start the engine or switch on the motor carefully according to instructions and with feet well away from the blade(s) and not in front of the discharge chute.

Operation

- Never mow while people, especially children, or pets are nearby.
- Mow only in daylight or in good artificial light.
- Avoid operating the lawn mower in wet grass, where feasible.
- Stay alert for holes in the terrain and other hidden hazards.
- Do not put hands or feet near or under rotating parts. Keep clear of the discharge opening at all times.
- Never pick up or carry a lawn mower while the engine is running.
- Use extreme caution when reversing or pulling a pedestrian controlled lawn mower towards you.
- Walk, never run.
- Slopes:

  - Do not mow excessively steep slopes.
  - Exercise extreme caution when on slopes.
  - Mow across the face of slopes, never up and down and exercise extreme caution when changing direction on slopes.
  - Always be sure of your footing on slopes.
- Use low throttle settings when engaging the traction-clutch, especially in high gears. Reduce speed on slopes and in sharp turns to prevent overturning or loss of control.
- Stop the blade if the lawn mower has to be tilted for transportation when crossing surfaces other than grass and when transporting the lawn mower to and from the area to be mowed.
- Do not operate the engine in a confined space where dangerous carbon monoxide fumes can collect.
- Stop the engine
  - whenever you leave the lawn mower.
  - before refueling.
  - before removing the grass catcher.
  - before making height adjustment unless adjustment can be made from the operator's position.
- Stop the engine and disconnect the spark-plug wire.
  - before clearing blockages or unclogging chute.
  - before checking, cleaning or working on the lawn mower.
  - after striking a foreign object, inspect the lawn mower for damage and make repairs before restarting and operating the lawn mower.
  - if lawn mower starts to vibrate abnormally (check immediately).
- Reduce the throttle setting during engine shut down, and close the fuel valve at the conclusion of mowing.
- Watch out for traffic when crossing or near roadways.

Maintenance and Storage

- Keep all nuts, bolts and screws tight to be sure the equipment is in safe working condition.
- Do not use pressure cleaning equipment on machine.
- Never store the equipment with gasoline in the tank and inside a building where fumes can reach an open flame or spark.
- Allow the engine to cool before storing in any enclosure.
- To reduce the fire hazard, keep the engine, silencer, battery compartment and gasoline storage are free of grass, leaves, or excessive grease.
- Check grass catcher components and the discharge guard frequently and replace with manufacturer's recommended parts, when necessary.
- Replace worn or damaged parts for safety.
- Replace faulty silencers.
- If the fuel tank has to be drained, do this out-doors.
- Do not change the engine governor settings or overspeed the engine. Operating an engine at excessive speed can increase the hazard of personal injury.
- Be careful during adjustment of the lawn mower to prevent entrapment of the fingers between moving blades and fixed parts of the lawn mower.
- **To ensure the best performance and safety, purchase only genuine Toro replacement parts and accessories. Do not use *will fit* parts and accessories; they may cause a safety hazard.**

Sound Pressure

This unit has an equivalent continuous A-weighted sound pressure level at the operator ear of 88 dBA, based on measurements of identical machines per EN 836 and ISO 11201.

Sound Power

This unit has an equivalent continuous A-weighted sound power level of 98 dBA, based on measurements of identical machines per ISO 11094.

Vibration, Hand/arm

This unit does not exceed a hand/arm vibration level of 5.5 m/s^2, based on measurements of identical machines per EN 836 and EN 1033.

Safety and Instructional Decals

Safety decals and instructions are easily visible to the operator and are located near any area of potential danger. Replace any decal that is damaged or lost.

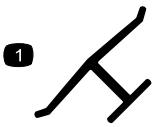

Manufacturer's Mark

1. Indicates the blade is identified as a part from the original machine manufacturer.



98-4387

1. Warning—wear hearing protection.

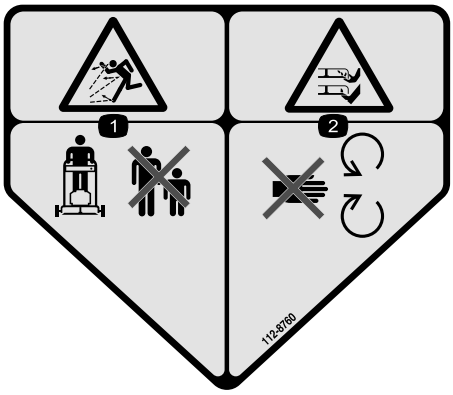

112-8760

1. Thrown object hazard—keep bystanders a safe distance from the machine.
2. Cutting/dismemberment of hand or foot—stay away from moving parts.

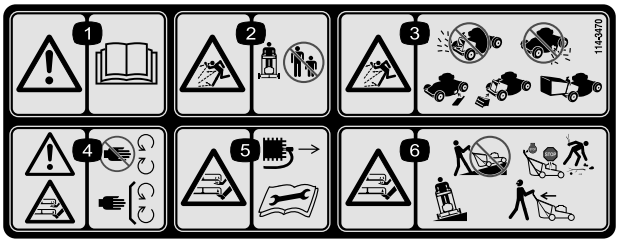

114-3470

1. Warning—read the *Operator's Manual*.
2. Thrown object hazard—keep bystanders a safe distance from the machine.
3. Thrown object hazard—do not operate the mower without the rear discharge plug or bag in place; do not operate the mower without the side discharge cover or deflector in place.
4. Warning; cutting/dismemberment hazard of hand or foot, mower blade—stay away from moving parts; keep all guards in place.
5. Cutting/dismemberment hazard of hand or foot, mower blade—remove the ignition key and read the instructions before servicing or performing maintenance.
6. Cutting/dismemberment hazard of hand or foot, mower blade—do not operate up and down slopes; operate side to side on slopes; stop the engine before leaving the operating position; and look behind you when backing up.

Setup

Loose Parts

Use the chart below to verify that all parts have been shipped.

Procedure	Description	Qty.	Use
1	Oval-head bolt Locknut Upper handle Cable tie	6 6 1 1	Install the handle.
2	No parts required	–	Fill the crankcase with oil.
3	No parts required	–	Adjust the handle height.

Note: Determine the left and right sides of the machine from the normal operating position.

1

Installing the Handle

Parts needed for this procedure:

6	Oval-head bolt
6	Locknut
1	Upper handle
1	Cable tie

Procedure

1. Attach the upper handle to the lower handle using 4 oval-head bolts and 4 locknuts.

   Note: Ensure that the bolt heads are to the **outside** of the handle.

2. Move the handle to the operating position.

3. Attach the handle braces to the lower handle sides with 2 oval-head bolts and secure them finger tight using 2 locknuts (Figure 3).

   Important: Ensure that the bolt heads are to the *inside* of the handle.

   Important: The square shank of the bolts will not fit into the holes in the handle at this time.

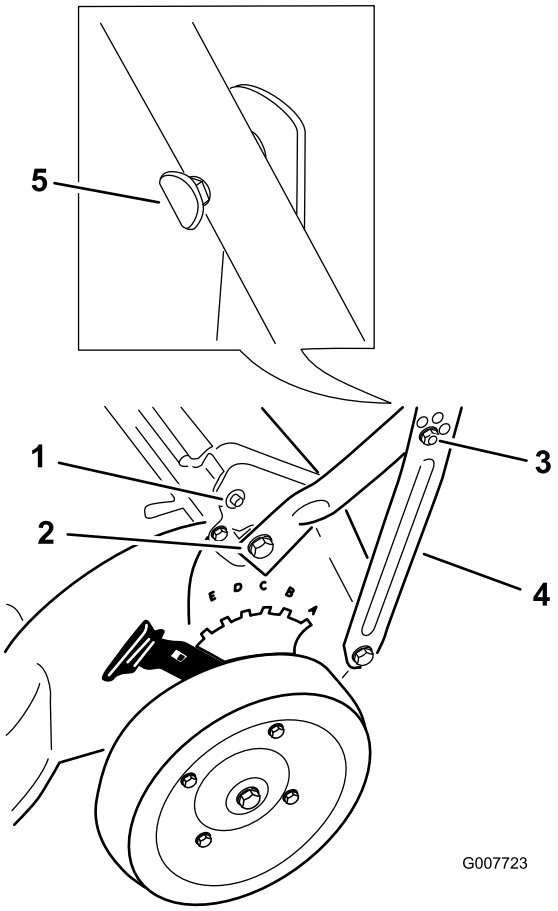

Figure 3

1. End cap on rear door rod
2. Bolt and washer (2)
3. Locknut (2)
4. Handle brace (2)
5. Bolt head aligned with the handle.

4. Align the oval bolt heads with the handle as shown in Figure 3; then, holding the heads in that position, tighten each nut with a wrench to pull the square shank into the handle until the bolt heads are tight against the handle.

5. Tighten the rest of the fasteners on the handle and handle braces.
6. Use the cable tie provided to secure the control cable(s) to the handle.

   Note: Attach the cable tie as low as possible on the handle to prevent the cable(s) from hooking onto the end cap on the rear door rod and interfering with the self-propel system (Figure 3).

2

Filling the Crankcase with Oil

No Parts Required

Procedure

The engine crankcase is shipped without oil. You must fill it with approximately 22 ounces (0.65 liters) of oil before starting the engine. Refer to Checking the Engine Oil Level in Operation , page 8 for oil specifications and instructions.

3

Adjusting the Handle Height

No Parts Required

Procedure

You may raise or lower the handle to a position comfortable for you.

1. Remove the fastener that attaches the handle braces to the lower handle ends.
2. Insert the bolt through the hole in each of the handle braces that sets the handle to the desired position and tighten (Figure 4).

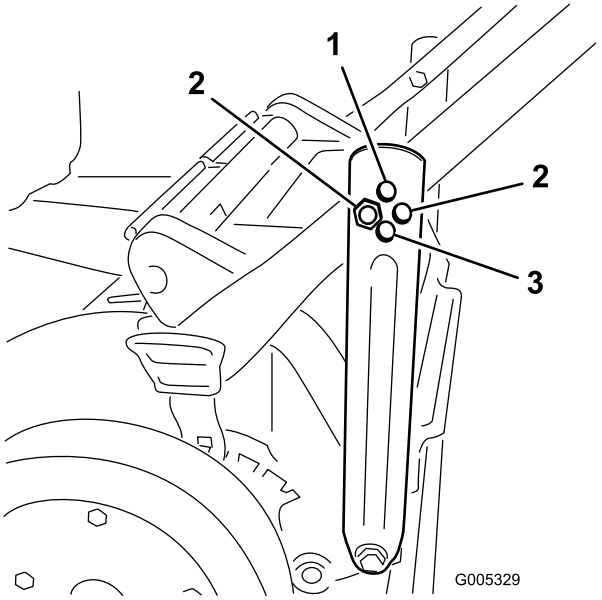

Figure 4

1. Highest position
2. Middle position (either hole)
3. Lowest position

Product Overview

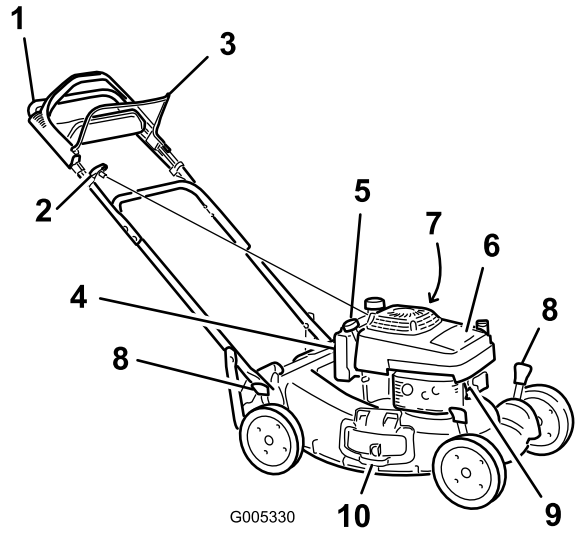

Figure 5

1. Upper handle
2. Recoil start handle
3. Blade control bar
4. Fuel tank
5. Oil fill/dipstick
6. Air filter
7. Primer
8. Cutting height lever (4)
9. Spark plug
10. Side discharge

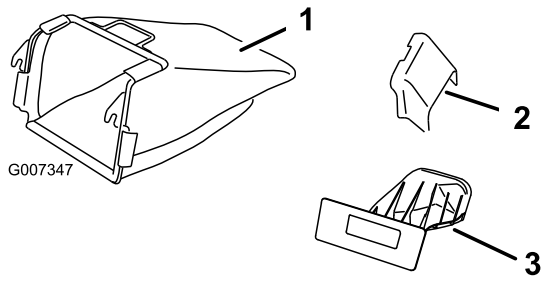

Figure 6

1. Grass bag
2. Side discharge chute
3. Rear discharge plug (installed)

Operation

Note: Determine the left and right sides of the machine from the normal operating position.

Each time before you mow, make sure that the self-propel drive and the blade control bar operate properly. When you release the blade control bar, the blade and self-propel drive should stop. If they do not, contact an Authorized Service Dealer.

This machine produces sound levels in excess of 85dBA at the operator's ear and can cause hearing loss through extended periods of exposure.

Wear hearing protection when operating this machine.



Figure 7

1. Warning—wear hearing protection.

Checking the Engine Oil Level

Service Interval: Before each use or daily

Initially, fill the crankcase with 22 ounces (0.65 liters) of oil. Use only high-quality SAE 30 or SAE 10W30 weight detergent oil that has the American Petroleum Institute (API) service classification SF, SG, SH, or SJ.

Before each use, ensure that the oil level is between the Add and Full marks on the dipstick (Figure 8).

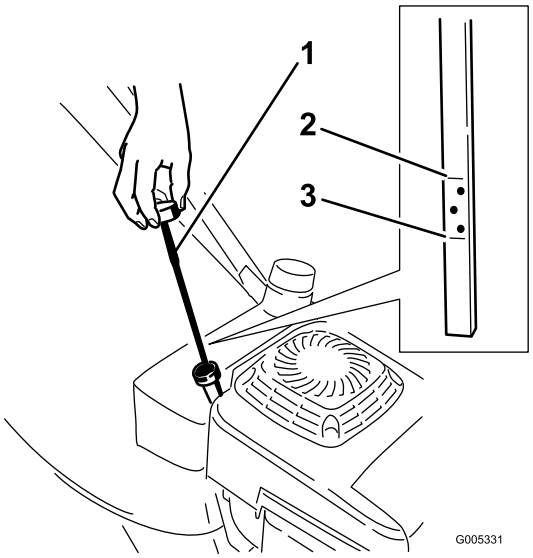

Figure 8

1. Dipstick
2. Full
3. Add

Note: When the crankcase is empty, pour about 3/4 of the crankcase capacity of oil in the crankcase, then follow the procedure in this section.

1. Move the lawn mower to a level surface.
2. Clean around the dipstick (Figure 8).
3. Remove the dipstick by rotating the cap counterclockwise and pulling it out.
4. Wipe the dipstick clean with a clean cloth.
5. Insert the dipstick into the filler neck, **but do not screw it in**.
6. Remove the dipstick and read the oil level on the dipstick (Figure 8).
7. If the oil level reading is below the Add mark on the dipstick, slowly pour only enough oil into the filler hole to raise the oil level to the Full mark on the dipstick.

   Important: Do not overfill the crankcase with oil and run the engine; engine damage will result. Drain the excess oil until the oil level on the dipstick reads Full.
8. Insert the dipstick into the filler neck and rotate the cap clockwise until it is tight.

Filling the Fuel Tank with Gasoline

For best results, use clean, fresh, lead-free gasoline with an octane rating of 87 or higher. To ensure freshness, purchase only the quantity of gasoline that you expect to use in 30 days. Using unleaded gasoline results in fewer combustion deposits and longer engine life. You may use leaded gasoline if unleaded gasoline is not available.

Important: Do not add oil to the gasoline.

Important: Do not use methanol, gasoline containing methanol, gasohol containing more than 10% ethanol, premium gasoline, or white gas. Using these fuels can damage the engine's fuel system.

Important: Do not use gasoline that has been stored since the last mowing season or longer.

In certain conditions, gasoline is extremely flammable and highly explosive. A fire or explosion from gasoline can burn you and others and can damage property.

- **Fill the fuel tank outdoors, in an open area, and when the engine is cold. Wipe up any gasoline that spills.**
- **Do not fill the fuel tank completely full. Add gasoline to the fuel tank until the level is 1/4 to 1/2 in. (6 to 13 mm) below the bottom of the filler neck. This empty space in the tank allows the gasoline to expand.**
- **Never smoke when handling gasoline, and stay away from an open flame or where a spark may ignite the gasoline fumes.**
- **Store gasoline in an approved fuel container and keep it out of the reach of children.**
- **Never buy more than a 30-day supply of gasoline.**

When fueling, under certain circumstances, a static charge can develop, igniting the gasoline. A fire or explosion from gasoline can burn you and others and damage property.

- **Always place gasoline containers on the ground and away from your vehicle before filling.**
- **Do not fill gasoline containers inside a vehicle or on a truck or trailer bed because interior carpets or plastic truck bed liners may insulate the container and slow the loss of any static charge.**
- **When practical, remove gasoline-powered equipment from the truck or trailer and refuel the equipment with its wheels on the round.**
- **If this is not possible, then refuel such equipment on a truck or trailer from a portable container, not from a gasoline dispenser nozzle.**
- **If you must use a gasoline dispenser nozzle, keep the nozzle in contact with the rim of the fuel tank or container opening at all times until fueling is complete.**

Use a fuel stabilizer/conditioner regularly during operation and storage. A stabilizer/conditioner cleans the engine during operation and prevents gum-like varnish deposits from forming in the engine during periods of storage.

Important: Do not use fuel additives other than a fuel stabilizer/conditioner. Do not use fuel stabilizers with an alcohol base such as ethanol, methanol, or isopropanol.

1. Clean around the fuel tank cap (Figure 9).

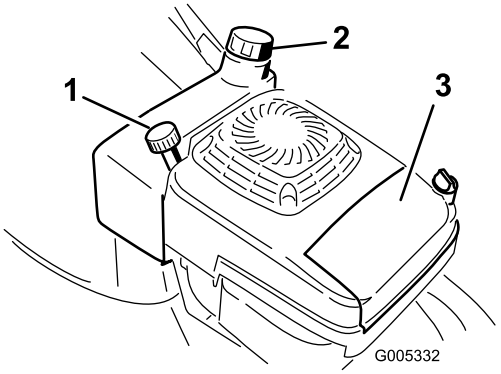

Figure 9

1. Oil fill/dipstick
2. Fuel tank cap
3. Air cleaner

2. Remove the cap from the tank.
3. Fill the fuel tank with unleaded gasoline to within 1/4 to 1/2 inch (6 to 13 mm) from the top of the tank. **Do not fill into the filler neck.**

   Important: Do not fill the tank more than 1/4 inch (6 mm) from the top of the tank because the gasoline must have room to expand.
4. Install the fuel tank cap and wipe up any spilled gasoline.

Starting the Engine

1. Connect the wire to the spark plug (Figure 10).

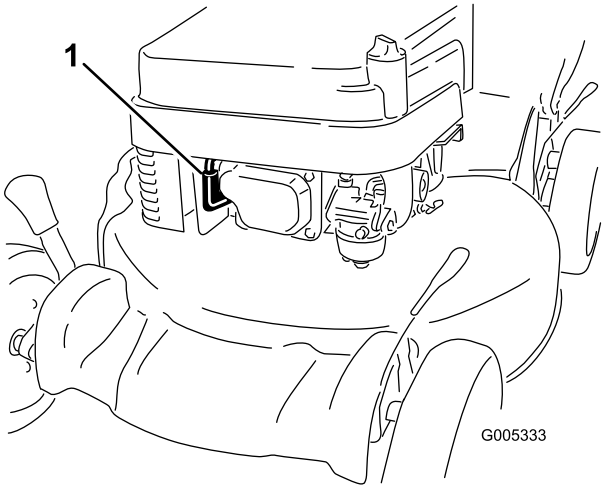

Figure 10

1. Spark-plug wire

2. Firmly push in the primer once with your thumb (Figure 11).

   Note: Do not push in the primer excessively to prevent flooding the engine with fuel.

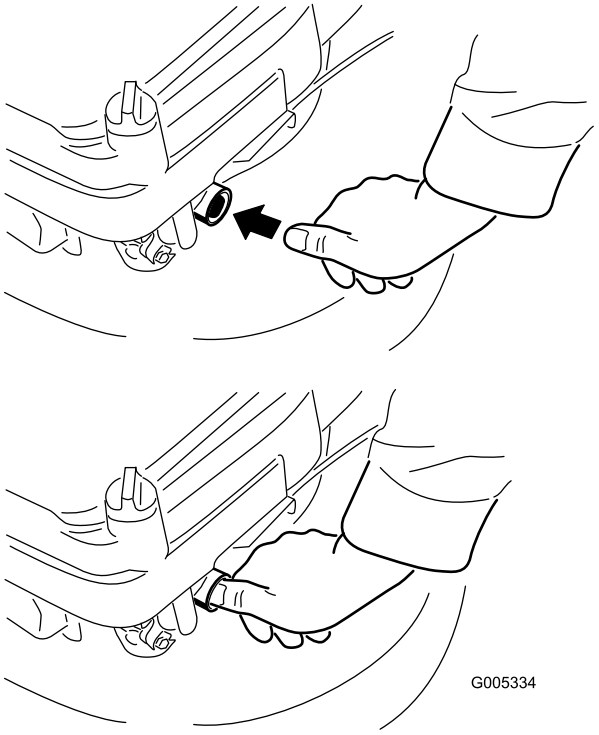

Figure 11

3. Hold the blade control bar against the handle (Figure 12).

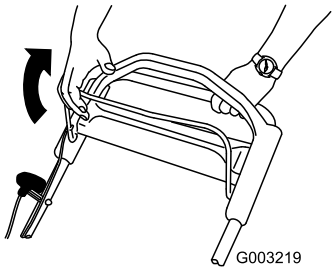

Figure 12

4. Pull the recoil starter (Figure 13).

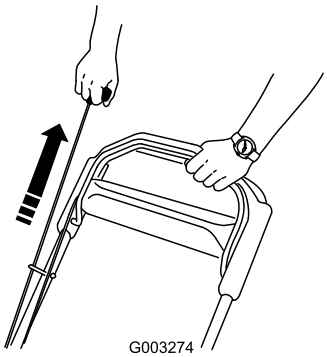

Figure 13

5. If the mower does not start in 1 or 2 pulls, press the primer button 1 or 2 times and try starting it again.

Note: If the mower still does not start, contact an Authorized Service Dealer.

Stopping the Engine

Release the blade control bar (Figure 14).

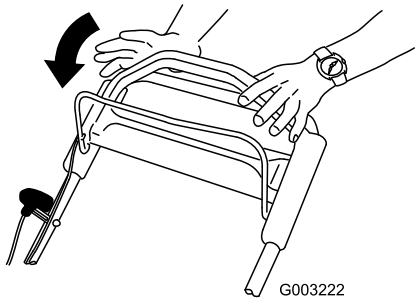

Figure 14

Important: When you release the blade control bar, both the engine and blade should stop within 3 seconds. If they do not stop properly, stop using your mower immediately and contact an Authorized Service Dealer.

Using the Self-propel Drive

To operate the self-propel drive, simply walk with your hands on the upper handle and your elbows at your sides, and the mower will automatically keep pace with you (Figure 15).

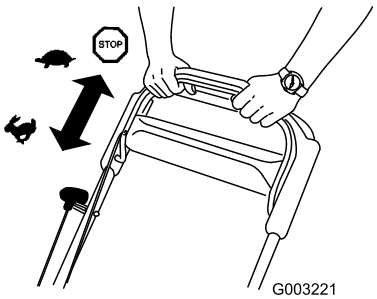

Figure 15

Adjusting the Cutting Height

Adjusting the cutting height may bring you into contact with the moving blade, causing serious injury.

- **Stop the engine and wait for all moving parts to stop.**
- **Do not put your fingers under the housing when adjusting the cutting height.**

If the engine has been running, the muffler will be hot and can severely burn you. Keep away from the hot muffler.

Adjust the cutting height as desired. Set all four wheels to the same height.

Note: To raise the mower, move all 4 cutting height levers forward; to lower the mower, move them all rearward (Figure 16).

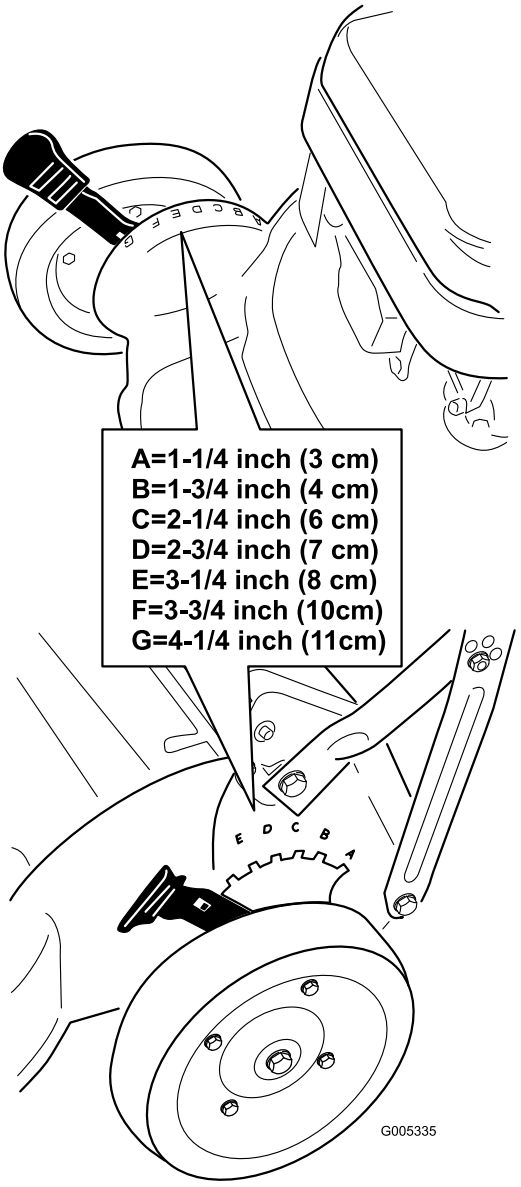

Figure 16

Recycling the Clippings

Your mower comes from the factory ready to recycle the grass and leaf clippings back into the lawn.

If the grass bag is on the mower, remove it (refer to Removing the Grass Bag) before recycling the clippings. If the side discharge chute is on the mower, remove it and lock the side discharge door (refer to Removing the Side Discharge Chute) before recycling the clippings.

Important: Ensure that the rear discharge plug is in place before you recycle the clippings (Figure 17).

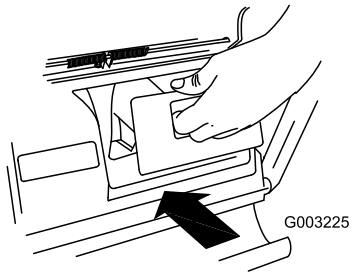

Figure 17

Side-discharging the Clippings

Use the side discharge for cutting very tall grass.

If the bag is on the mower, remove it and insert the rear discharge plug (refer to Removing the Grass Bag) before side-discharging the clippings.

Important: Ensure that the rear discharge plug is in place before you recycle the clippings (Figure 18).

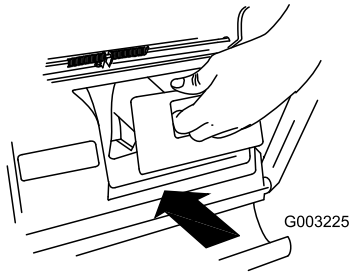

Figure 18

The blade is sharp; contacting the blade can result in serious personal injury.

Stop the engine and wait for all moving parts to stop before leaving the operating position.

Installing the Side Discharge Chute

1. Unlock the side discharge door (Figure 19).

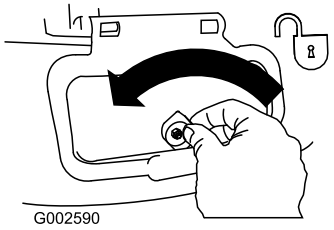

Figure 19

2. Lift open the side discharge door (Figure 20).

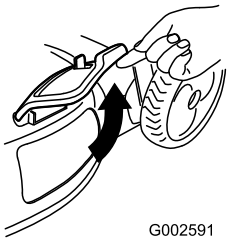

Figure 20

3. Install the side discharge chute and close the door onto the chute (Figure 21).

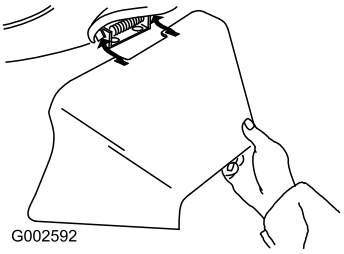

Figure 21

Removing the Side Discharge Chute

To remove the side discharge chute, reverse the steps above.

Important: Lock the side discharge door after you close it (Figure 22).

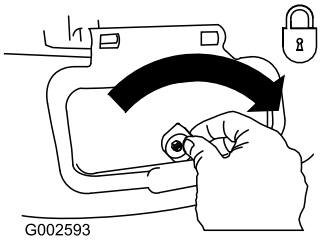

Figure 22

Installing the Grass Bag

Use the grass bag when you want to collect grass and leaf clippings from the lawn.

If the side discharge chute is on the mower, remove it and lock the side discharge door before bagging the clippings.

The blade is sharp; contacting the blade can result in serious personal injury.

Stop the engine and wait for all moving parts to stop before leaving the operating position.

1. Raise and hold up the rear door (Figure 23).

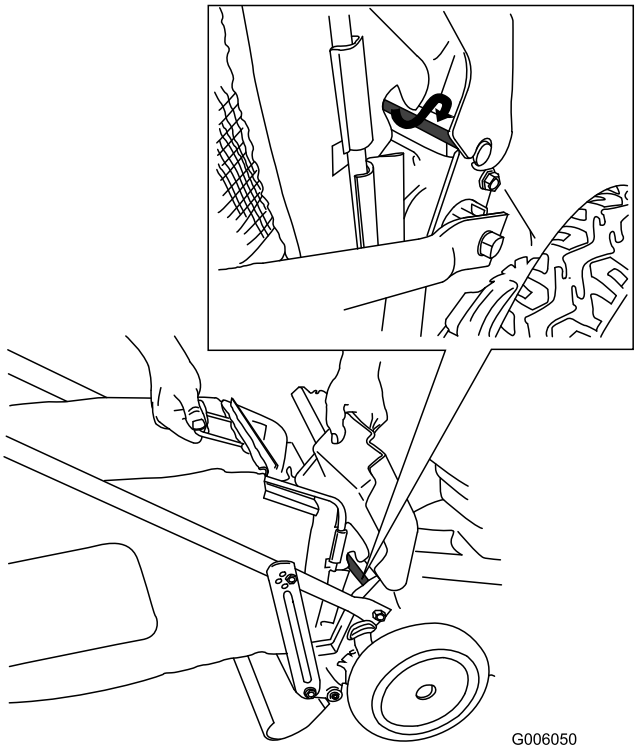

Figure 23

2. Remove the rear discharge plug.
3. Install the bag onto the door rod (see inset in Figure 23).
4. Lower the rear door.
5. To remove the bag, reverse the steps above.

Operating Tips

General Tips

- Maintain a sharp blade throughout the cutting season. Periodically file down nicks on the blade.
- Replace the blade when necessary with an original Toro replacement blade.
- Mow only dry grass or leaves. Wet grass and leaves tend to clump on the yard and can cause the mower to plug or the engine to stall.

Wet grass or leaves can cause serious injury if you slip and contact the blade.

Mow only in dry conditions.

- Clean under the mower housing after each mowing. See Cleaning under the Mower Housing.
- Keep the engine in good running condition.
- Set the engine speed to the fastest position for the best cutting results.

Operating a mower with its engine running at a speed greater than the factory setting can cause the mower to throw a part of the blade or engine into the operator's or bystander's area and result in serious personal injury or death.

- **Do not change the engine speed setting.**
- **If you suspect the engine speed is faster than normal, contact an Authorized Service Dealer.**

- Clean the air filter frequently. Mulching stirs up more clippings and dust which clogs the air filter and reduces engine performance.

Cutting Grass

- Grass grows at different rates at different times of the year. In the summer heat, it is best to cut grass at the 2-1/4 inch (57 mm), 2-3/4 inch (70 mm), or 3-1/4 inch (83 mm) cutting height settings. Cut only about a third of the grass blade at a time. Do not cut below the 2-1/4 inch (57 mm) setting unless the grass is sparse or it is late fall when grass growth begins to slow down.
- When cutting grass over 6 inches (15 cm) tall, first mow at the highest cutting height setting and walk slower; then mow again at a lower setting for the best lawn appearance. If the grass is too long and the leaves clump on top of the lawn, the mower may plug and cause the engine to stall.
- Alternate the mowing direction. This helps disperse the clippings over the lawn for even fertilization.

If the finished lawn appearance is unsatisfactory, try one or more of the following:

- Sharpen the blade.
- Walk at a slower pace while mowing.
- Raise the cutting height on your mower.
- Cut the grass more frequently.
- Overlap cutting swaths instead of cutting a full swath with each pass.
- Set the cutting height on the front wheels one notch lower than the rear wheels. For example, set the front wheels at 2-1/4 inches (57 mm) and the rear wheels at 2-3/4 inches (70 mm).

Cutting Leaves

- After cutting the lawn, ensure that half of the lawn shows through the cut leaf cover. You may need to make more than one pass over the leaves.
- For light leaf coverage, set all the wheels at the same cutting height setting.
- If there are more than 5 inches (12.7 cm) of leaves on the lawn, set the front cutting height 1 or 2 notches higher than the rear cutting height. This makes it easier to feed the leaves under the mower housing.
- Slow down your mowing speed if the mower does not cut the leaves finely enough.
- If you mow over oak leaves, you can add lime to the grass in the spring to reduce the acidity of the oak leaves.

Maintenance

Note: Determine the left and right sides of the machine from the normal operating position.

Recommended Maintenance Schedule(s)

Maintenance Service Interval	Maintenance Procedure
After the first 8 hours	• Change the engine oil.
Before each use or daily	• Check the engine oil level. • Inspect the mower blades for wear or damage. • Clean under the mower housing.
Every 25 hours	• Lubricate the rear wheel gears. • Clean the foam pre-cleaner (more frequently in dusty conditions).
Every 50 hours	• Change the engine oil (more often in dusty conditions).
Every 100 hours	• Check the spark plug.
Every 300 hours	• Replace the paper air filter (more frequently in dusty conditions).
Yearly	• Empty the fuel tank and clean the fuel filter.

Important: Refer to your *Engine Operator's Manual* for additional maintenance procedures.

If you leave the wire on the spark plug, someone could accidently start the engine and seriously injure you or other bystanders.

Disconnect the wire from the spark plug before you do any maintenance. Set the wire aside so that it does not accidently contact the spark plug.

Lubrication

Lubricating the Wheel Gears

Service Interval: Every 25 hours

Lubricate each **rear** wheel with grease yearly.

1. Wipe the grease fittings just inside the rear wheels with a clean rag (Figure 24).

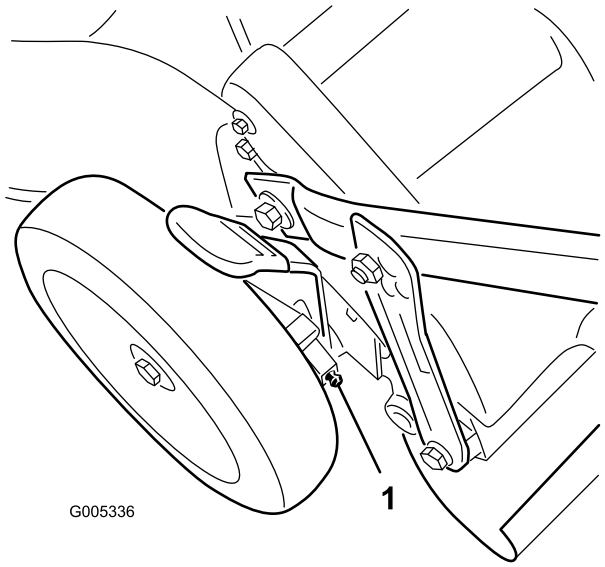

Figure 24

1. Grease fitting

2. Install a grease gun onto each fitting and gently apply 2 or 3 pumps of #2 multi-purpose lithium-base grease.

Engine Maintenance

Servicing the Air Filter

Service Interval: Every 25 hours

Every 300 hours

Clean the foam pre-cleaner every 25 operating hours. Replace the paper air filter once every season or every 300 operating hours; replace it more frequently in dusty conditions.

Important: Do not operate the engine without the air filter assembly; extreme engine damage will occur.

1. Stop the engine and wait for all moving parts to stop.
2. Remove the screw that secures the air filter coverFigure 25).

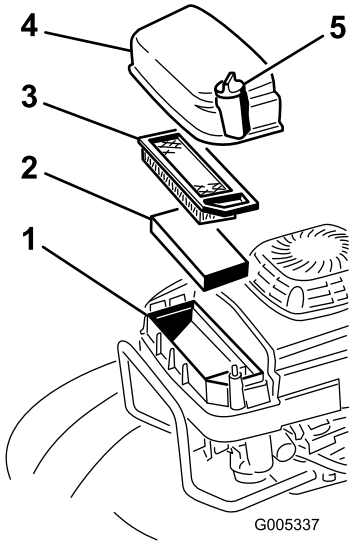

Figure 25

1. Air Filter housing
2. Foam pre-cleaner
3. Paper air filter
4. Cover
5. Screw

3. Remove the cover and clean it thoroughly (Figure 25).
4. Remove and inspect the paper air filter (Figure 25), and discard it if it is excessively dirty.

   Important: Do not try to clean a paper filter.

5. Remove the foam pre-cleaner and wash it with a mild detergent and water, then blot it dry.
6. Saturate the pre-cleaner with oil, then squeeze it (do not twist) to remove the excess oil.
7. Install the foam pre-cleaner.
8. Install the paper air filter.

Note: Install a new paper air filter if you discarded the old one.

9. Install the cover and secure it with the screw.

Changing the Engine Oil

Service Interval: After the first 8 hours

Every 50 hours

Change the oil after the first 8 operating hours and than after every 50 operating hours or every season (more frequently in dusty or dirty conditions).

1. Run the engine to warm the engine oil.

   Note: Warm oil flows better and carries more contaminants.

Oil may be hot after engine has been run, and contact with hot oil can cause severe personal injury.

Avoid contacting the hot engine oil when you drain it.

2. Stop the engine and wait for all moving parts to stop.
3. Disconnect the wire from the spark plug (Figure 10).
4. Place a suitable drain pan under the right side of the mower.
5. Remove the dipstick by rotating the cap counterclockwise and pulling it out.
6. Tip the mower onto its **right** side to drain the oil into the drain pan.

   Note: You can also remove the oil from the crankcase using an oil extractor.

7. Return the mower to its operating position.
8. Insert the dipstick into the filler neck and rotate the cap clockwise until it is tight.
9. Recycle the used oil according to local codes.
10. Fill the crankcase to the Full line on the dipstick with fresh oil. Refer to the Filling the Crankcase with Oil.
11. Wipe up any spilled oil.

Servicing the Spark Plug

Service Interval: Every 100 hours

Check the spark plug after every 100 operating hours. Use an **NGK BPR5ES** spark plug or equivalent.

1. Stop the engine and wait for all moving parts to stop.
2. Disconnect the wire from the spark plug (Figure 10).
3. Clean around the spark plug.
4. Remove the spark plug from the cylinder head.

   Important: Replace a cracked, fouled, or dirty spark plug. Do not clean the electrodes because grit entering the cylinder can damage the engine.

5. Set the gap on the plug to 0.030 inch (0.76 mm) (Figure 26).

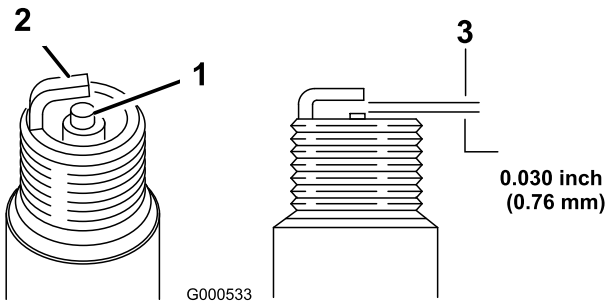

Figure 26

1. Center electrode insulator
2. Side electrode
3. Air gap (not to scale)

6. Install the spark plug and the gasket seal.
7. Torque the plug to 17 ft-lb (23 N·m).
8. Connect the wire to the spark plug.

Fuel System Maintenance

Emptying the Fuel Tank and Cleaning the Fuel Filter

Service Interval: Yearly

The fuel filter (screen) element is located inside the fuel tank. Clean the fuel filter element yearly.

1. Stop the engine and wait for it to cool down.

   Note: Drain gasoline from a cold engine only.

2. Disconnect the wire from the spark plug (Figure 10).
3. Disconnect the fuel line by loosening the tube clamp at the carburetor.
4. Open the fuel valve.
5. Drain the gasoline completely from the tank and fuel line into an approved fuel container.
6. Remove the fuel tank from the mower.
7. Pour a small amount of fuel in the fuel tank, move the fuel around in the tank, and pour it out into an approved fuel container.
8. Install the fuel tank and fuel line; refer to Installing the Fuel Tank and the Fuel Line.

Blade Maintenance

Maintaining the Cutting Blade

Always mow with a sharp blade. A sharp blade cuts cleanly and without tearing or shredding the grass blades.

1. Stop the engine and wait for all moving parts to stop.
2. Disconnect the wire from the spark plug (Figure 10).
3. Drain the gasoline from the fuel tank; refer to Emptying the Fuel Tank and Cleaning the Fuel Filter.
4. Tip the mower onto its side with the air filter up (Figure 27).

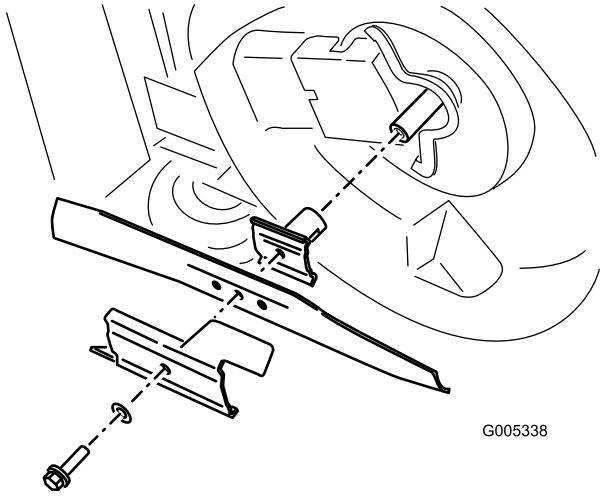

Figure 27

Inspecting the Blade

Service Interval: Before each use or daily

Carefully examine the blade for sharpness and wear, especially where the flat and the curved parts meet (Figure 28A). Because sand and abrasive material can wear away the metal that connects the flat and curved parts of the blade, check the blade before using the mower. If you notice a slot or wear (Figure 28B and Figure 28C), replace the blade; refer to Removing the Blade.

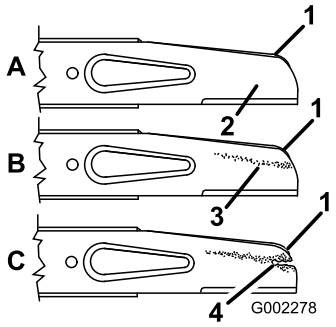

Figure 28

1. Sail
2. Flat part of the blade
3. Wear
4. Slot formed

Note: For the best performance, install a new blade before the cutting season begins. During the year, file down any small nicks to maintain the cutting edge.

A worn or damaged blade can break, and a piece of the blade could be thrown into the operator's or bystander's area, resulting in serious personal injury or death.

- **Inspect the blade periodically for wear or damage.**
- **Replace a worn or damaged blade.**

Removing the Blade

Grasp the end of the blade using a rag or a thickly padded glove. Remove the blade bolt, accelerator, and the blade (Figure 27).

Sharpening the Blade

File the top side of the blade to maintain its original cutting angle (Figure 29A) and inner cutting edge radius (Figure 29B). The blade will remain balanced if you remove the same amount of material from both cutting edges.

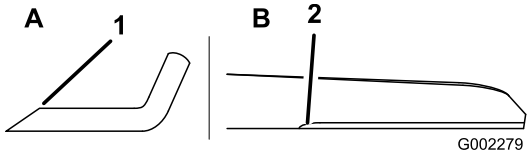

Figure 29

1. Sharpen at this angle only.
2. Maintain the original radius here.

Balancing the Blade

1. Check the balance of the blade by placing the center hole of the blade over a nail or screwdriver shank clamped horizontally in a vise (Figure 30).

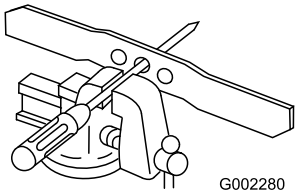

Figure 30

Note: You can also check the balance using a commercially manufactured blade balancer.

2. If either end of the blade rotates downward, file that end (not the cutting edge or the end near the cutting edge). The blade is properly balanced when neither end drops.

Installing the Blade

1. Install a sharp, balanced Toro blade, the accelerator, and the blade bolt. **Torque the blade bolt to 60 ft-lb (82 N·m).**
2. Return the mower to its operating position.
3. Connect the wire to the spark plug.

Cleaning

Cleaning under the Mower Housing

To ensure the best performance, keep the underside of the mower housing clean.

Washing Method

Service Interval: Before each use or daily

1. Position the mower on a flat concrete or asphalt surface near a garden hose.
2. Start the engine.
3. Hold the running garden hose at handle level and direct the water to flow on the ground just in front of the **right** rear wheel (Figure 31).

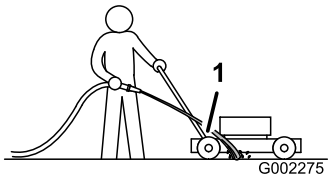

Figure 31

1. Right rear wheel

Note: The water will splash into the path of the blade, cleaning out the clippings.

4. Stop the engine and wait for all moving parts to stop.
5. Turn off the water.
6. Start the mower and let it run for a few minutes to dry out the moisture on the mower and its components.

Scraping Method

If washing does not remove all debris from under the mower, scrape it clean.

1. Disconnect the wire from the spark plug (Figure 10).
2. Drain the fuel from the fuel tank. Refer to Emptying the Fuel Tank and Cleaning the Fuel Filter.

Tipping the mower may cause the fuel to leak from the carburetor or the fuel tank. Gasoline is extremely flammable, highly explosive, and, under certain conditions, can cause personal injury or property damage.

Avoid fuel spills by running the engine dry or by removing the gasoline with a hand pump; never siphon.

3. Tip the mower onto its **right** side.
4. Remove the dirt and grass clippings with a hardwood scraper. Avoid burrs and sharp edges.
5. Return the mower to its operating position.
6. Fill the fuel tank.
7. Connect the wire to the spark plug.

Storage

To prepare the mower for off-season storage, perform the recommended maintenance procedures. Refer to Maintenance.

Store the mower in a cool, clean, dry place. Cover the mower to keep it clean and protected.

Preparing the Fuel System

Gasoline can vaporize if you store it over long periods of time and explode if it comes into contact with an open flame.

- **Do not store gasoline over long periods of time.**
- **Do not store the mower with gasoline in the fuel tank or the carburetor in an enclosure with an open flame. (For example, a furnace or a water heater pilot light.)**
- **Allow the engine to cool before storing it in any enclosure.**

Empty the fuel tank when mowing the last time before storing the mower.

1. Run the mower until the engine stops from running out of fuel.
2. Prime the engine and start it again.
3. Allow the engine to run until it stops. When you can no longer start the engine, it is sufficiently dry.

Preparing the Engine

1. While the engine is still warm, change the oil from the crankcase. Refer to Changing the Engine Oil.
2. Remove the spark plug.
3. Using an oil can, add about one tablespoon of oil to the crankcase through the spark plug hole.
4. Slowly rotate the engine several times, using the starter rope, to distribute the oil.
5. Install the spark plug but do not connect the wire to the spark plug.

General Information

1. Clean the mower housing. Refer to Cleaning under the Mower Housing.
2. Clean any dirt and chaff from the cylinder, cylinder head fins, and blower housing.
3. Remove grass clippings, dirt, and grime from the external parts of the engine, the shrouding, and the top of the mower housing.
4. Check the condition of the blade. Refer to Maintaining the Cutting Blade.
5. Service the air filter; refer to Servicing the Air Filter.
6. Lubricate the pivot arms; refer to Lubricating the Pivot Arms.
7. Tighten all nuts, bolts, and screws.
8. Touch up all rusted or chipped paint surfaces with paint available from an Authorized Service Dealer.

Removing the Lawn Mower from Storage

1. Check and tighten all fasteners.
2. Remove the spark plug and spin the engine rapidly using the starter to blow excess oil from the cylinder.
3. Clean the spark plug or replace it if it is cracked, broken, or if the electrodes are worn.
4. Install the spark plug and torque it to 17 ft-lb (23 N·m).
5. Perform any needed maintenance procedures; refer to Maintenance.
6. Fill the fuel in the fuel tank with fresh gasoline.
7. Check the engine oil level.
8. Connect the wire to the spark plug.

Troubleshooting

Problem	Possible Cause	Corrective Action
Engine does not start	1. The fuel tank is empty or the fuel system contains stale fuel.	1. Drain and/or fill the fuel tank with fresh gasoline. If the problem persists, contact an Authorized Service Dealer.
	2. The wire is not connected to the spark plug.	2. Connect the wire to the spark plug.
	3. The spark plug is pitted, fouled, or the gap is incorrect.	3. Check the spark plug and adjust the gap if necessary. Replace the spark plug if it is pitted, fouled, or cracked.
Engine starts hard or loses power	1. The fuel tank contains stale fuel.	1. Drain and fill the fuel tank with fresh gasoline.
	2. The fuel cap vent hole is plugged.	2. Clean the fuel cap vent hole or replace the fuel cap.
	3. The air filter element is dirty and is restricting the air flow.	3. Clean the air filter pre-cleaner and/or replace the paper air filter.
	4. The underside of the mower housing contains clippings and debris.	4. Clean under the mower housing.
	5. The spark plug is pitted, fouled, or the gap is incorrect.	5. Check the spark plug and adjust the gap if necessary. Replace the spark plug if it is pitted, fouled, or cracked.
	6. The engine oil level is low or the oil is dirty.	6. Check the engine oil. Change the oil if it is dirty or add oil if it is low.
Engine runs rough	1. The wire is not connected to the spark plug.	1. Connect the wire to the spark plug.
	2. The spark plug is pitted, fouled, or the gap is incorrect.	2. Check the spark plug and adjust the gap if necessary. Replace the spark plug if it is pitted, fouled, or cracked.
	3. The throttle lever is not in the Fast position.	3. Move the throttle lever to the Fast position.
	4. The air filter element is dirty and is restricting the air flow.	4. Clean the air filter pre-cleaner and/or replace the paper air filter.
Lawn mower or engine vibrates excessively	1. The blade is bent or is out of balance.	1. Balance the blade. If the blade is bent, replace it.
	2. The blade mounting nuts are loose.	2. Tighten the blade mounting nuts.
	3. The underside of the mower housing contains clippings and debris.	3. Clean under the mower housing.
	4. The engine mounting bolts are loose.	4. Tighten the engine mounting bolts.
Uneven cutting pattern	1. All 4 wheels are not at the same height.	1. Place all 4 wheels at the same height.
	2. The blade is dull.	2. Sharpen and balance the blade.
	3. You are mowing in the same pattern repeatedly.	3. Change the mowing pattern.
	4. The underside of the mower housing contains clippings and debris.	4. Clean under the mower housing.
Mower does not self-propel	1. The self-propel drive cable is out of adjustment or is damaged.	1. Adjust the self-propel drive cable. Replace the cable if necessary.
	2. There is debris under the belt cover.	2. Clean the debris from under the belt cover.

Notes:

Notes:

Notes:

International Distributor List

Distributor:	Country:	Phone Number:
Atlantis Su ve Sulama Sisstemleri Lt	Turkey	90 216 344 86 74
Balama Prima Engineering Equip	Hong Kong	852 2155 2163
B-Ray Corporation	Korea	82 32 551 2076
Casco Sales Company	Puerto Rico	787 788 8383
Ceres S.A	Costa Rica	506 239 1138
CSSC Turf Equipment (pvt) Ltd	Sri Lanka	94 11 2746100
Cyril Johnston & Co	Northern Ireland	44 2890 813 121
Equiver	Mexico	52 55 539 95444
Femco S.A.	Guatemala	502 442 3277
G.Y.K. Company ltd.	Japan	81 726 325 861
Geomechaniki of Athens	Greece	30 10 935 0054
Guandong Golden Star	China	86 20 876 51338
Hako Gorund and Garden	Sweden	46 35 10 0000
Hayter Limited (U.K.)	United Kingdom	44 1279 723 444
Hydroturf Int. Co Dubai	United Arab Emirates	97 14 347 9479
Hydroturf Egypt LLC	Egypt	202 519 4308
Ibea S.p.A.	Italy	39 0331 853611
Irriamc	Portugal	351 21 238 8260
Jean Heybroek b.v.	Netherlands	31 30 639 4611
Lely (U.K.) Limited	United Kingdom	44 1480 226 800
Maquiver S.A.	Colombia	57 1 236 4079
Maruyama Mfg. Co. Inc.	Japan	81 3 3252 2285
Metra Kft	Hungary	36 1 326 3880
Mountfield a.s.	Czech Republic	420 255 704 220
Munditol S.A.	Argentina	54 11 4 821 9999
Oslinger Turf Equipment SA	Ecuador	593 4 239 6970
Oy Hako Ground and Garden Ab	Finland	358 987 00733
Parkland Products Ltd	New Zealand	64 3 34 93760
Prochaska & Cie	Austria	43 1 278 5100
RT Cohen 2004 Ltd	Israel	972 986 17979
Riversa	Spain	34 9 52 83 7500
Roth Motorgerate GmBh & Co	Germany	49 7144 2050
Sc Svend Carlsen A/S	Denmark	45 66 109 200
Solvert S.A.S	France	33 1 30 81 77 00
Spypros Stavrinides Limited	Cyprus	357 22 434131
Surge Systems India Limited	India	91 1 292299901
T-Markt Logistics Ltd	Hungary	36 26 525 500
Toro Australia	Australia	61 3 9580 7355
Toro Europe BVBA	Belgium	32 14 562 960

The Toro Warranty

Conditions and Products Covered

The Toro® Company and its affiliate, Toro Warranty Company, pursuant to an agreement between them, jointly promises to the original purchaser* to repair any Toro Product used for normal residential purposes* if defective in materials or workmanship. The following time periods apply from the date of original purchase:

Products	Warranty Period
Walk Power Mowers	2-year limited warranty
Rear Engine Riders	2-year limited warranty
Lawn & Garden Tractors	2-year limited warranty
Electric Hand Held Products	2-year limited warranty
Snowthrowers	2-year limited warranty
Consumer Zero Turn	2-year limited warranty

* "Original purchaser" means use the person who originally purchased Toro products.

* "Normal residential purposes" means use of the product on the same lot as your home. Use at more than one location is considered commercial use, and the commercial use warranty would apply.

Limited Warranty for Commercial Use

Toro Consumer Products and attachments used for commercial, institutional, or rental use are warranted against defects in materials or workmanship for the following time periods from the date of original purchase:

Products	Warranty Period
Walk Power Mowers	90 day warranty
Rear Engine Riders	90 day warranty
Lawn & Garden Tractors	90 day warranty
Electric Hand Held Products	90 day warranty
Snowthrowers	90 day warranty
Consumer Zero Turn	45 day warranty

Instructions for Obtaining Warranty Service

If you think that your Toro Product contains a defect in materials or workmanship, follow this procedure:

1. Contact your seller to arrange service of the product. If for any reason it is impossible for you to contact your seller, you may contact any Toro Authorized Distributor to arrange service.
2. Bring the product and your proof of purchase (sales receipt) to your seller or the Service Dealer.

If for any reason you are dissatisfied with the Service Dealer's analysis or with the assistance provided, contact the Toro importer or contact us at:

Customer Care Department, Consumer Division
Toro Warranty Company
8111 Lyndale Avenue South
Bloomington, MN 55420-1196
Manager: Technical Product Support: 001-952-887-8248

See attached Distributor List

Owner Responsibilities

You must maintain your Toro Product by following the maintenance procedures described in the operator's manual. Such routine maintenance, whether performed by a dealer or by you, is at your expense.

Items and Conditions Not Covered

This express warranty does not cover:

- Cost of regular maintenance service or parts, such as filters, fuel, lubricants, tune-up parts, blade sharpening, brake and clutch adjustments.
- Any product or part which has been altered or misused or required replacement or repair due to normal wear, accidents, or lack of proper maintenance.
- Repairs necessary due to improper fuel, contaminants in the fuel system, or failure to properly prepare the fuel system prior to any period of non-use over three months.
- Engine and transmission. These are covered by the appropriate manufacturer's guarantees with separate terms and conditions.

All repairs covered by this warranty must be performed by an Authorized Toro Service Dealer using Toro approved replacement parts.

General Conditions

The purchaser is covered by the national laws of each country. The rights to which the purchaser is entitled with the support of these laws are not restricted by this warranty.