FORM NO. 3315–681

TORO

MODEL NO. 30555 – 39001 & UP

PARTS CATALOG

52" CUTTING UNIT

Groundsmaster® 200 Series

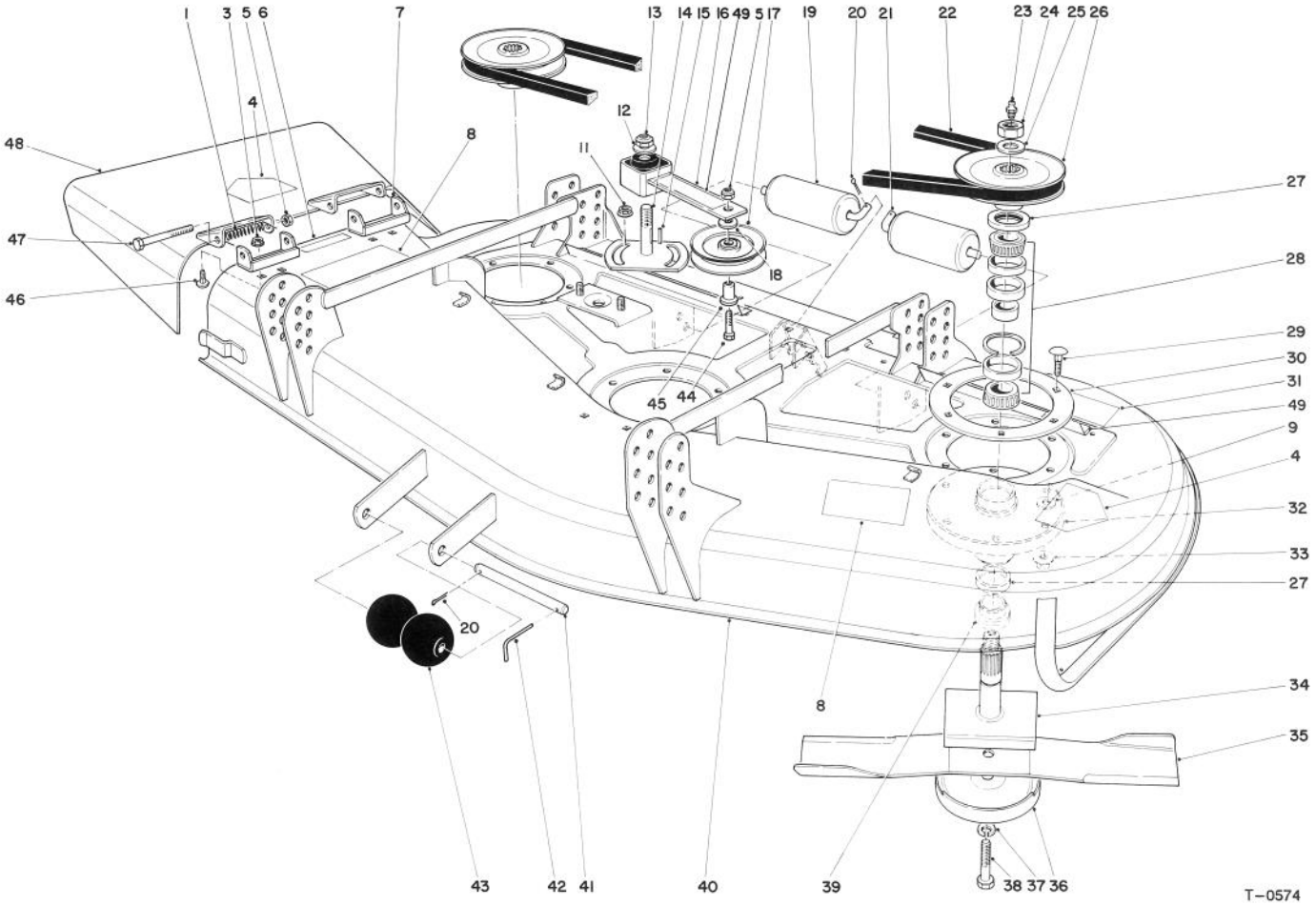

DECK AND SPINDLE ASSEMBLY

Ref. No.	Part No.	Description	No. Used
1	40–6230	Spring – Torsion	1
3	32128–20	Nut – Lock	4
4	43–8480	Decal – Danger	2
5	3296–5	Nut – Lock	3
6	66–6380	Decal – Deflector Missing	1
7	29–5590	Pivot Bracket – Deflector	2
8	66–1340	Decal – Danger	2
9	3256–24	Washer – Flat	18
11	3290–357	Nut – Flange	2
12	3256–27	Washer – Flat	1
13	3296–33	Nut –Lock	1
14	28–9060	Plate – Idler	1
15	5–1077	Key – Square	1
16	27–8580	Idler Socket	1

Ref. No.	Part No.	Description	No. Used
17	65–5940	Pulley – Idler	1
18	7–0081	Washer – Special	1
19	36–1740	Roller – Deck	2
20	3272–11	Pin – Cotter	3
21	40–0340	Shaft – Rear Roller	2
22	27–1160	V–Belt	1
23	302–2	Fitting – Grease	3
24	32146–20	Nut – Lock	3
25	7–4150	Washer	3
26	27–0970	Pulley	3
27	253–139	Seal – Wave	6
28	46–8530	Assembly – Bearing	3
29	3231–22	Bolt – Carriage	18
30	27–7680	Ring – Deck Support	3

TPS

© The TORO Company –1992

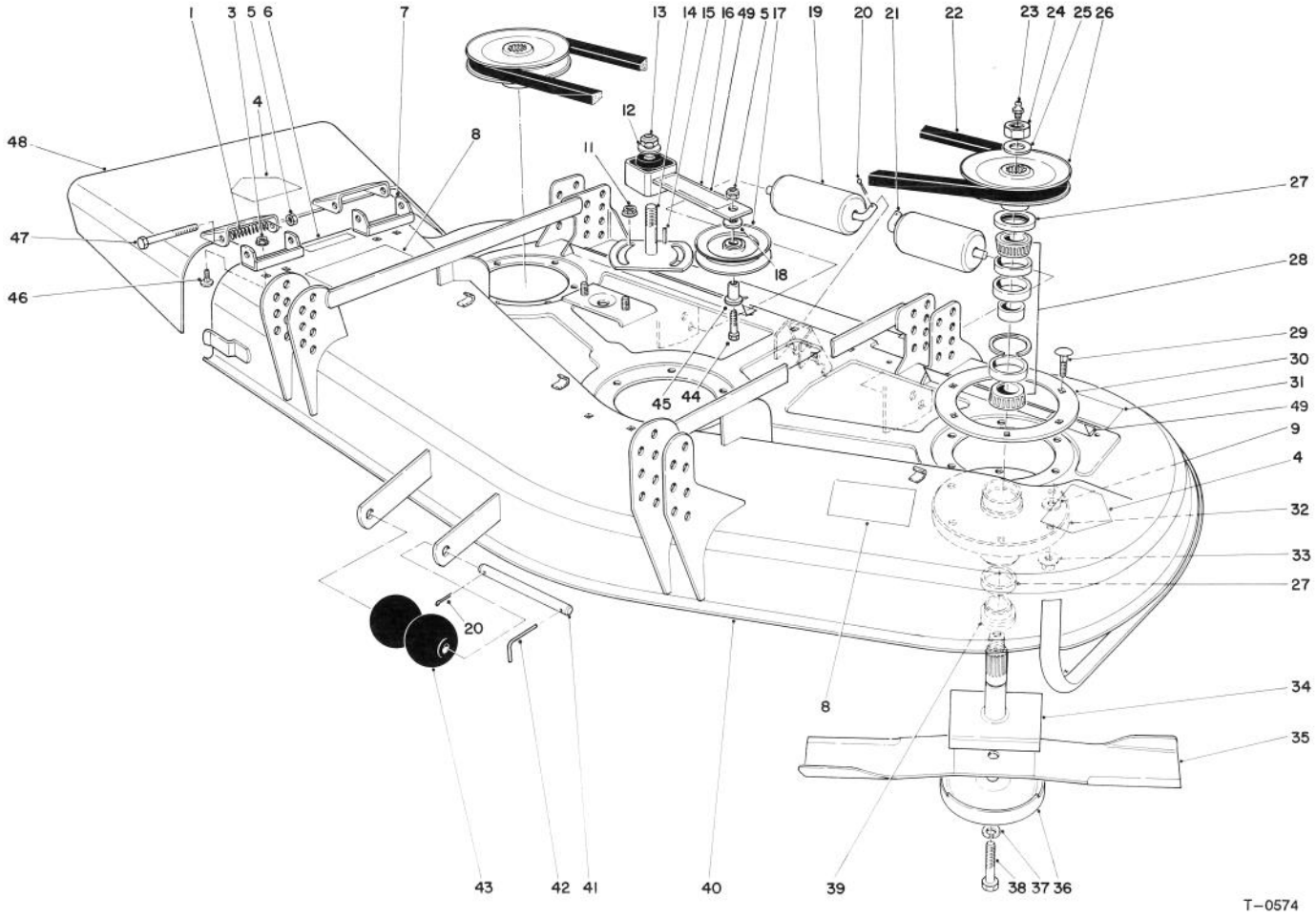

DECK AND SPINDLE ASSEMBLY (Continued)

Ref. No.	Part No.	Description	No. Used
31	68–8340	Decal – Blade Bolt Torque	1
32	61–4160	Housing – Spindle	3
33	32128–21	Nut – Flange	18
34	27–0920	Spindle – Shaft	3
35	27–0990	Blade	3
36	72–9361	Anti–Scalp Cup	3
37	3253–27	Washer – Lock	3
38	44–2200	Screw – Blade Bolt	3
39	27–0950	Spacer – Spindle Bearing	3
40	72–9210	Cutting Deck	1
41	40–6400	Shaft – Roller	1
42	57–0690	Pin – Cotter, Special	1
43	29–4820	Roller	2

Ref. No.	Part No.	Description	No. Used
44	3211–8	Screw – Cap Hex. Hd.	1
45	65–5950	Bushing – Pulley	1
46	3230–23	Bolt – Carriage	4
47	3211–15	Screw – Cap Hex. Hd.	2
48	14–0899	Deflector – Grass (Incl. Ref. #4)	1
49	67–5360	Decal – Shield Missing	2
*	44–5480	Blade – High Sail (Optional)	3
*	27–0870	Assembly – Spindle (Incl. Ref. #23–28, 32, 34 & 39)	3
*	27–5970	Set – Spacer, Matched	1

*Not Illustrated

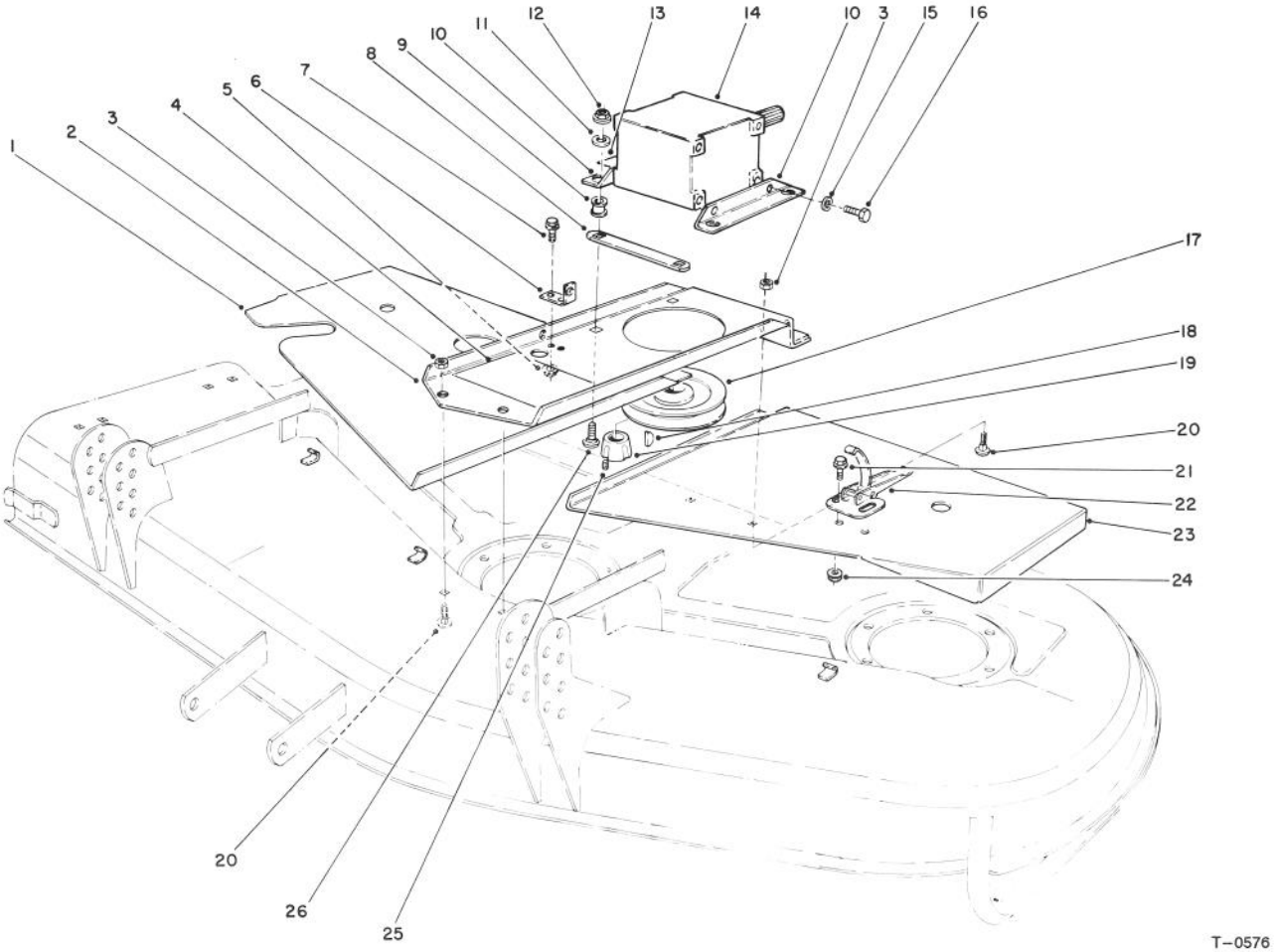

T–0576

COVERS AND GEAR BOX ASSEMBLY

Ref. No.	Part No.	Description	No. Used
1	72–9300	Cover R.H.	1
2	72–9230	Base – Gear Box	1
3	3290–357	Nut – Flange	4
4	51–3960	Decal – 52	1
5	32128–20	Nut – Flange	2
6	72–9240	Bracket – Extension	1
7	322–4	Screw – Cap Hex. Hd.	2
8	68–9890	Cover – Gear Box	1
9	63–9750	IS0 Mount – Gear Box	4
10	68–8560	Bracket – Gear Box	2
11	63–8410	Washer	4
12	32153–2	Nut	4
13	70–2560	Decal – Lube	1
14	68–6810	Assembly – Gear Box	1

Ref. No.	Part No.	Description	No. Used
15	3253–21	Washer – Flat	4
16	323–4	Screw – Cap Hex. Hd.	4
17	63–9900	Pulley – Gear Box	1
18	3257–5	Key – Woodruff	1
19	27–6140	Bushing – Taper Lock (Incl. Ref. #25)	1
20	3231–27	Bolt – Carriage	4
21	3290–321	Screw – Machine	6
22	249–21	Latch – Draw	3
23	72–9340	Cover L.H.	1
24	32128–17	Nut – Flange	6
25	3245–9	Screw – Set	1
26	3231–26	Bolt – Carriage	4

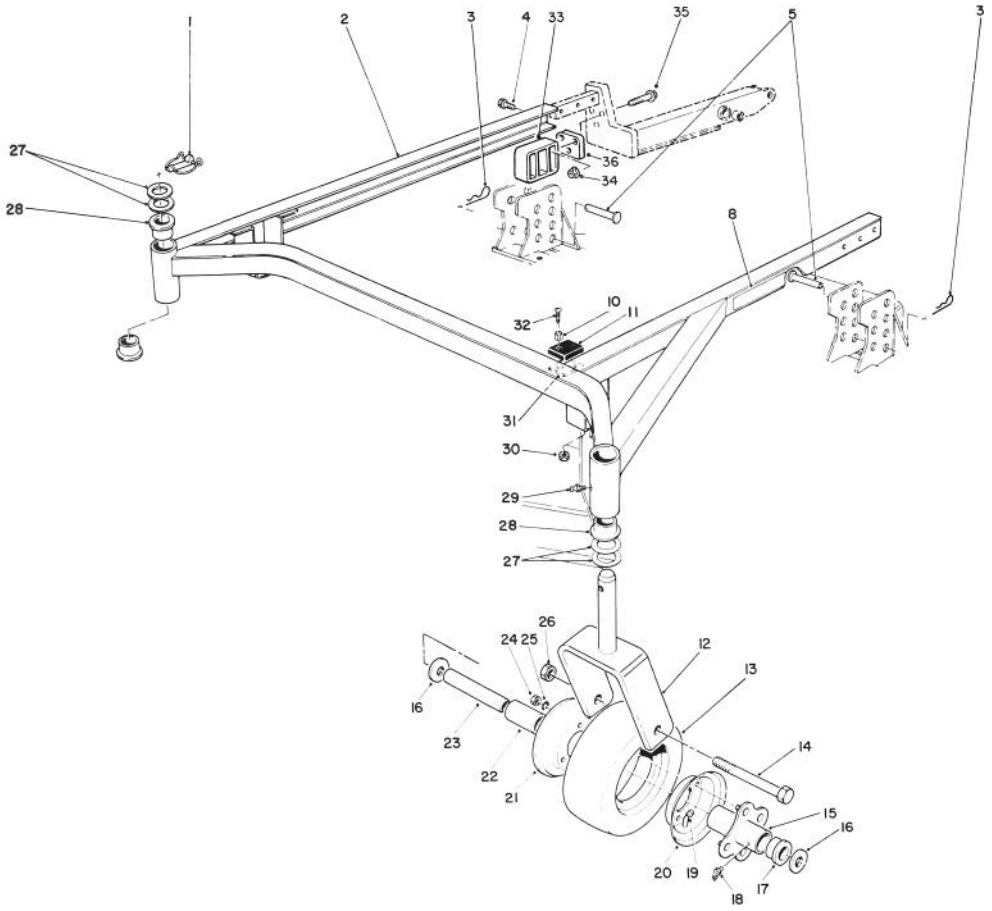

T–1249

CARRIER FRAME ASSEMBLY

Ref. No.	Part No.	Description	No. Used
1	3290–384	Pin – Lynch	2
2	83–4550	Frame – Deck Suspension (Incl. Ref. #28)	1
3	3290–355	Pin – Hair	4
4	325–32	Screw – Cap Hex Hd.	6
5	283–55	Pin – Clevis	4
6	302–40	Fitting – Grease	2
8	68–8360	Decal – H.O.C.	1
10	40–9520	Spacer – Split	4
11	40–0330	Cushion – Rubber	2
12	68–8900	Fork – Castor, Front	2
13	68–8960	Tire	2
14	325–19	Screw – Cap Hex Hd.	2
15	68–8940	Hub – Center	2
16	3256–6	Washer – Thrust	4
17	62–5580	Bushing	4
18	302–61	Fitting – Grease	2
19	68–8950	Tube w/Valve	2
20	68–8920	Wheel Half – Female	2

Ref. No.	Part No.	Description	No. Used
21	68–8930	Wheel Half – Male	2
22	62–5570	Bearing – Roller	2
23	68–8980	Bushing – Spanner	2
24	3217–6	Nut – Hex.	8
25	3253–4	Washer – Lock	8
26	32153–5	Nut – Lock	2
27	3–6781	Washer – Thrust	8
28	28–9290	Bushing – Special	4
29	302–5	Fitting – Grease	2
30	3296–2	Nut – Lock	4
31	42–6200	Cushion – Shim	A/R
32	32122–28	Screw – Mach. Truss Hd.	4
33	83–4520	Cradle – Rear	2
34	32128–40	Nut – Flange	6
35	66–9302	Screw – Flange Hd.	6
36	83–4580	Spacer	2
*	13–3869	Set of 2 Castor Wheel (Incl. Ref. #13, 15, 17–22 & 24–25)	1

*Not Illustrated

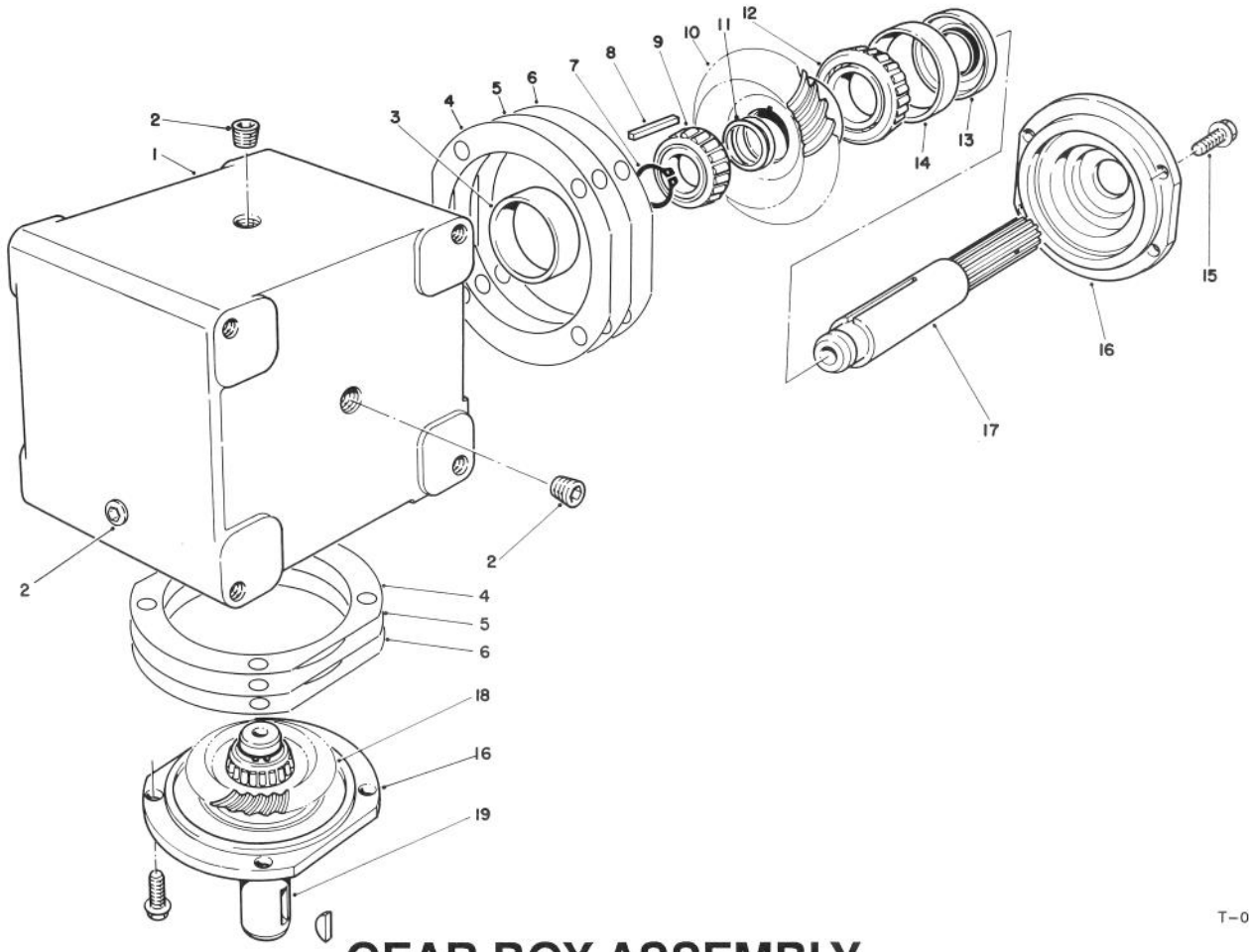

T–0977

GEAR BOX ASSEMBLY

Ref. No.	Part No.	Description	No. Used
1	68–7030	Housing	1
2	62–3490	Plug – Pipe (Solid)	4
3	62–3360	Cup – Bearing	2
4	62–3420	Gasket (.015)	A/R
5	62–3430	Gasket (.005)	A/R
6	62–3440	Gasket (.003)	A/R
7	68–7070	Ring – Retaining	2
8	62–3380	Key	2
9	62–3370	Cone – Bearing	2
10	68–7080	Gear	1

Ref. No.	Part No.	Description	No. Used
11	72–9370	Shim (.020)	2
12	62–3330	Cone – Gear	1
13	62–3400	Seal	2
14	62–3340	Cup – Bearing	2
15	62–3310	Screw – Cap	8
16	62–3410	Cap	2
17	68–7040	Shaft	1
18	68–7060	Gear	1
19	68–7050	Shaft	1
*	68–6810	Gear Box Assembly	1

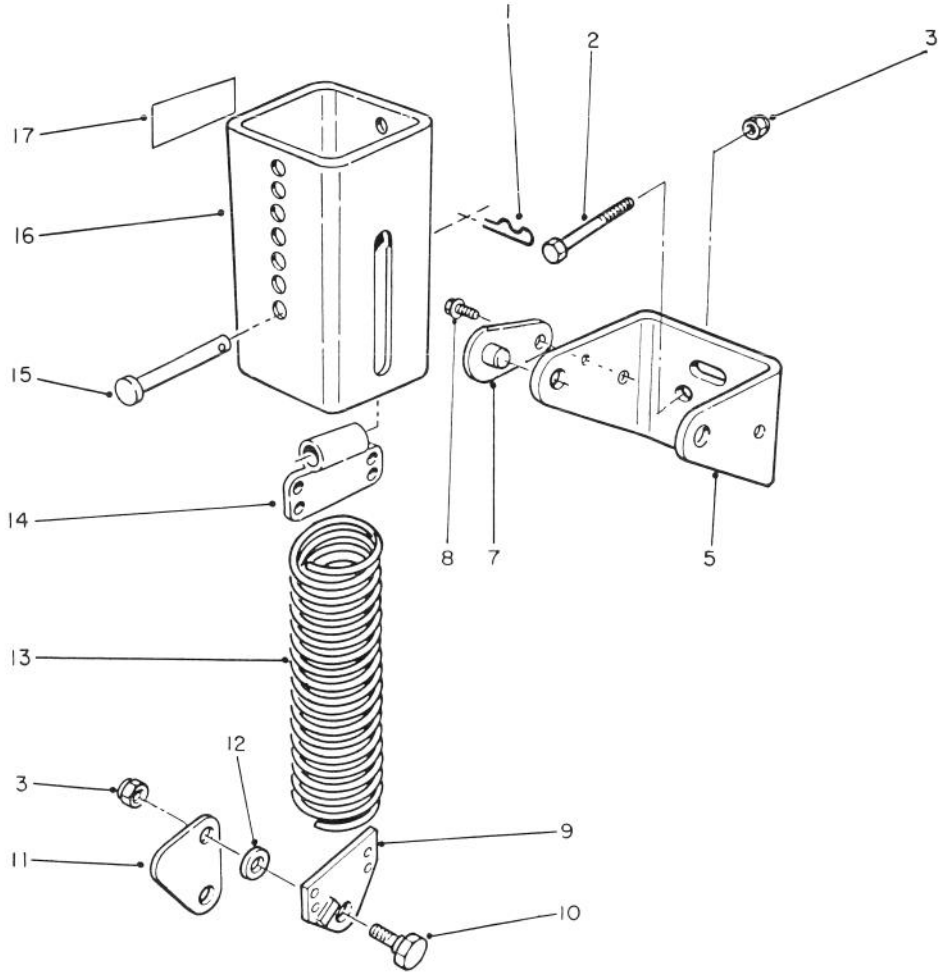

T–1219

COUNTER BALANCE

Ref. No.	Part No.	Description	No. Used
1	3290–355	Pin – Hair Cotter	1
3	3296–44	Nut – Lock	2
5	66–8460	Bracket – Mounting	1
7	70–7920	Assembly – Pin, Lock	2
8	12–3270	Screw – Self Tapping	2
9	66–8420	End – Spring	1
10	46–3380	Bolt – Shoulder	2
11	66–8450	Link – Knee	1

Ref. No.	Part No.	Description	No. Used
12	3256–24	Washer – Flat	2
13	66–8390	Spring – Extension	1
14	70–7940	End – Spring	1
15	283–69	Pin – Clevis	1
16	70–7970	Assembly – Cover, Spring	1
17	55–4300	Decal – Caution	2
*	70–8091	Counter Balance Assembly (Incl. Ref.# 1–15	1

TORO PART NUMBER INDEX

Part No.	Description	Pg. No.	Ref. No.	Qty.
3–6781	Washer – Thrust	4	27	8
5–1077	Key – Square	1	15	1
7–0081	Washer – Special	1	18	1
7–4150	Washer	1	25	3
12–3270	Screw – Self Tapping	6	8	2
13–3869	Set of 2 Castor Wheel	4	*	1
14–0899	Deflector – Grass	2	48	1
27–0870	Assembly – Spindle	2	*	3
27–0920	Spindle – Shaft	2	34	3
27–0950	Spacer – Spindle Bearing	2	39	3
27–0970	Pulley	1	26	3
27–0990	Blade	2	35	3
27–1160	V–Belt	1	22	1
27–5970	Set – Spacer, Matched	2	*	1
27–6140	Bushing – Taper Lock	3	19	1
27–7680	Ring – Deck Support	1	30	3
27–8580	Idler Socket	1	16	1
28–9060	Plate – Idler	1	14	1
28–9290	Bushing – Special	4	28	4
29–4820	Roller	2	43	2
29–5590	Pivot Bracket – Deflector	1	7	2
36–1740	Roller – Deck	1	19	2
40–0330	Cushion – Rubber	4	11	2
40–0340	Shaft – Rear Roller	1	21	2
40–6230	Spring – Torsion	1	1	1
40–6400	Shaft – Roller	2	41	1
40–9520	Spacer – Split	4	10	4
42–6200	Cushion – Shim	4	31	A/R
43–8480	Decal – Danger	1	4	2
44–2200	Screw – Blade Bolt	2	38	3
44–5480	Blade – High Sail (Optional)	2	*	3
46–3380	Bolt – Shoulder	6	10	2
46–8530	Assembly – Bearing	1	28	3
51–3960	Decal – 52"	3	4	1
55–4300	Decal – Caution	6	17	2
57–0690	Pin – Cotter, Special	2	42	1
61–4160	Housing – Spindle	2	32	3
62–3310	Screw – Cap	5	15	8
62–3330	Cone – Gear	5	12	1
62–3340	Cup – Bearing	5	14	2
62–3360	Cup – Bearing	5	3	2
62–3370	Cone – Bearing	5	9	2
62–3380	Key	5	8	2
62–3400	Seal	5	13	2
62–3410	Cap	5	16	2
62–3420	Gasket (.015)	5	4	A/R
62–3430	Gasket (.005)	5	5	A/R
62–3440	Gasket (.003)	5	6	A/R
62–3490	Plug – Pipe (Solid)	5	2	4
62–5570	Bearing – Roller	4	22	2
62–5580	Bushing	4	17	4
63–8410	Washer	3	11	4
63–9750	IS0 Mount – Gear Box	3	9	4
63–9900	Pulley – Gear Box	3	17	1
65–5940	Pulley – Idler	1	17	1
65–5950	Bushing – Pulley	2	45	1
66–1340	Decal – Danger	1	8	2
66–6380	Decal – Deflector Missing	1	6	1
66–8390	Spring – Extension	6	13	1
66–8420	End – Spring	6	9	1
66–8450	Link – Knee	6	11	1
66–8460	Bracket – Mounting	6	5	1
66–9302	Screw – Flange Hd.	4	35	6
67–5360	Decal – Shield Missing	2	49	2
68–6810	Assembly – Gear Box	3	14	1
68–7030	Housing	5	1	1
68–7040	Shaft	5	17	1
68–7050	Shaft	5	19	1
68–7060	Gear	5	18	1
68–7070	Ring – Retaining	5	7	2
68–7080	Gear	5	10	1
68–8340	Decal – Blade Bolt Torque	2	31	1
68–8360	Decal – H.O.C.	4	8	1
68–8560	Bracket – Gear Box	3	10	2
68–8900	Fork – Castor, Front	4	12	2
68–8920	Wheel Half – Female	4	20	2
68–8930	Wheel Half – Male	4	21	2
68–8940	Hub – Center	4	15	2
68–8950	Tube w/Valve	4	19	2
68–8960	Tire	4	13	2
68–8980	Bushing – Spanner	4	23	2
68–9890	Cover – Gear Box	3	8	1
70–2560	Decal – Lube	3	13	1
70–7920	Assembly – Pin, Lock	6	7	2
70–7940	End – Spring	6	14	1
70–7970	Assembly – Cover, Spring	6	16	1
70–8091	Counter Balance Assembly	6	*	1
72–9210	Cutting Deck	2	40	1
72–9230	Base – Gear Box	3	2	1
72–9240	Bracket – Extension	3	6	1
72–9300	Cover R.H.	3	1	1
72–9340	Cover L.H.	3	23	1
72–9361	Anti–Scalp Cup	2	36	3
72–9370	Shim (.020)	5	11	2
83–4520	Cradle – Rear	4	33	2
83–4550	Frame – Deck Suspension	4	2	1
83–4580	Spacer	4	36	2
249–21	Latch – Draw	3	22	3
253–139	Seal – Wave	1	27	6
283–55	Pin – Clevis	4	5	4
283–69	Pin – Clevis	6	15	1
302–2	Fitting – Grease	1	23	3
302–5	Fitting – Grease	4	29	2
302–40	Fitting – Grease	4	6	2
302–61	Fitting – Grease	4	18	2
322–4	Screw – Cap Hex. Hd.	3	7	2
323–4	Screw – Cap Hex. Hd.	3	16	4
325–19	Screw – Cap Hex Hd.	4	14	2
325–32	Screw – Cap Hex Hd.	4	4	6
3211–8	Screw – Cap Hex. Hd.	2	44	1
3211–15	Screw – Cap Hex. Hd.	2	47	2
3217–6	Nut – Hex.	4	24	8
3230–23	Bolt – Carriage	2	46	4
3231–22	Bolt – Carriage	1	29	18
3231–26	Bolt – Carriage	3	26	4
3231–27	Bolt – Carriage	3	20	4
3245–9	Screw – Set	3	25	1
3253–4	Washer – Lock	4	25	8
3253–21	Washer – Flat	3	15	4
3253–27	Washer – Lock	2	37	3
3256–6	Washer – Thrust	4	16	4
3256–24	Washer – Flat	1	9	18
3256–24	Washer – Flat	6	12	2
3256–27	Washer – Flat	1	12	1
3257–5	Key – Woodruff	3	18	1
3272–11	Pin – Cotter	1	20	3

*Not Illustrated

TORO PART NUMBER INDEX (Cont.)

Part No.	Description	Pg. No.	Ref. No.	Qty.
3290–321	Screw – Machine	3	21	6
3290–355	Pin – Hair	4	3	4
3290–355	Pin – Hair Cotter	6	1	1
3290–357	Nut – Flange	3	3	4
3290–357	Nut – Flange	1	11	2
3290–384	Pin – Lynch	4	1	2
3296–2	Nut – Lock	4	30	4
3296–5	Nut – Lock	1	5	3
3296–33	Nut –Lock	1	13	1
3296–44	Nut – Lock	6	3	2
32122–28	Screw – Mach. Truss Hd.	4	32	4
32128–17	Nut – Flange	3	24	6
32128–20	Nut – Flange	3	5	2
32128–20	Nut – Lock	1	3	4
32128–21	Nut – Flange	2	33	18
32128–40	Nut – Flange	4	34	6
32146–20	Nut – Lock	1	24	3
32153–2	Nut	3	12	4
32153–5	Nut – Lock	4	26	2

TABLE OF CONTENTS

Description	Page
Deck And Spindle Assembly	1
Covers And Gear Box Assembly	3
Carrier Frame Assembly	4
Gear box Assembly	5
Counter Balance Assembly	

Description	Page
Optional Equipment	
See Separate Forms	
Phenolic Wheel Assembly	Part No. 27–1050
Kit –52" Baffle	Part No. 68–7210
Kit–52" Mulcher	Model No.30700

*Not Illustrated