FORM NO. 3315–682

TORO®

MODEL NO. 30568–39001 & UP

PARTS CATALOG

52" REAR DISCHARGE DECK

FOR 200 SERIES PROLINE & GROUNDSMASTER©

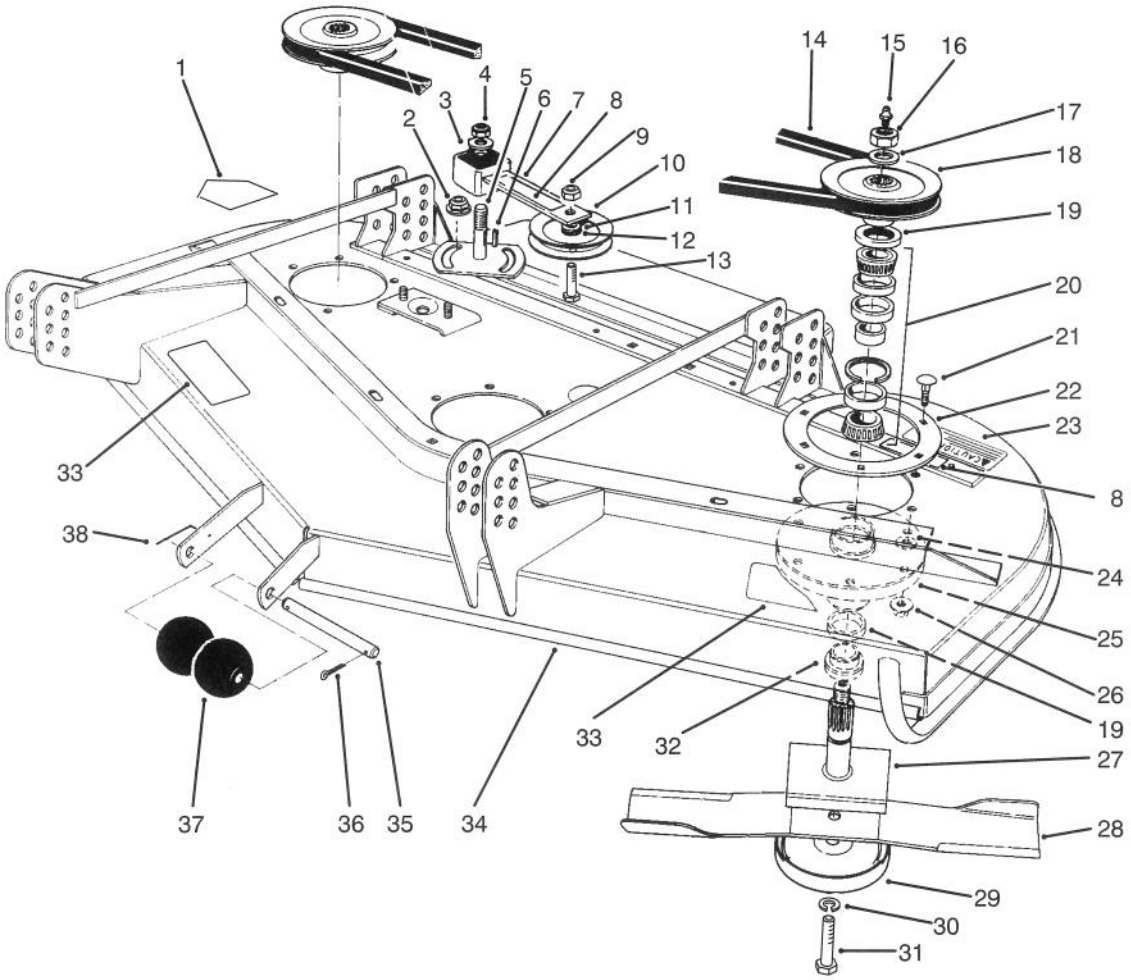

T–0577

DECK AND SPINDLE ASSEMBLY

Ref. No.	Part No.	Description	No. Used
1	43–8480	Decal – Danger	1
2	3296–357	Nut – Flange	2
3	3256–27	Washer – Flat	1
4	3296–33	Nut – Lock	1
5	28–9060	Plate – Idler	1
6	5–1077	Key – Square	1
7	27–8580	Idler Socket	1
8	67–5360	Decal – Shield Missing	2
9	3296–5	Nut – Lock	1
10	65–5940	Pulley – Idler	1
11	7–0081	Washer	1
12	65–5950	Bushing	1
13	3211–8	Screw – Cap Hex. Hd.	1
14	27–1160	V–Belt	1
15	302–2	Fitting – Grease	3
16	32146–20	Nut – Hex. Lock, Jam	3
17	7–4150	Washer	3

Ref. No.	Part No.	Description	No. Used
18	27–0970	Pulley	3
19	253–139	Seal – Wave	6
20	46–8530	Assembly – Bearing	3
21	3231–22	Bolt – Carriage	18
22	27–7680	Ring – Deck Support	2
23	68–8340	Decal – Blade Bolt Torque	1
24	3256–24	Washer – Flat	18
25	61–4160	Housing – Spindle	3
26	32128–21	Nut – Flange	18
27	27–0920	Spindle Shaft	3
28	27–0990	Blade	3
29	72–9360	Cup – Anti Scalp	3
30	3253–27	Washer – Lock	3
31	44–2200	Screw – Blade	3
32	27–0950	Spacer – Spindle Bearing	3
33	66–1340	Decal – Danger	2
34	72–9260	Cutting Deck	1

© The TORO Company –1993
All Rights Reserved

TPS

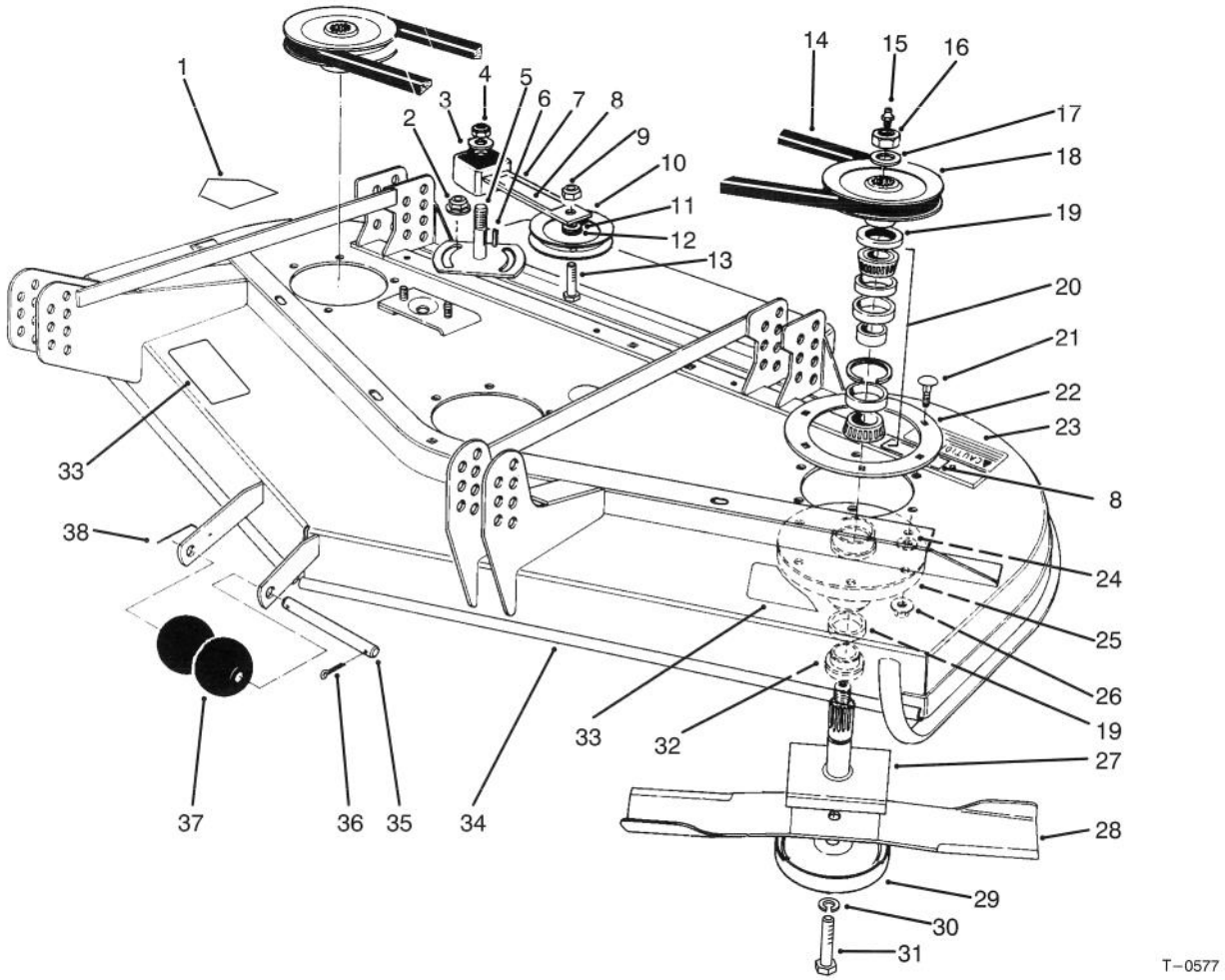

DECK AND SPINDLE ASSEMBLY (Continued)

Ref. No.	Part No.	Description	No. Used
35	40–6400	Shaft – Roller	1
36	3272–11	Pin – Cotter	1
37	29–4820	Roller	2
38	57–0690	Pin – Cotter, Special	1

Ref. No.	Part No.	Description	No. Used
*	27–0870	Assembly – Spindle (Incl. Ref. #15–20, 25, 27 & 32)	3

*Not Illustrated

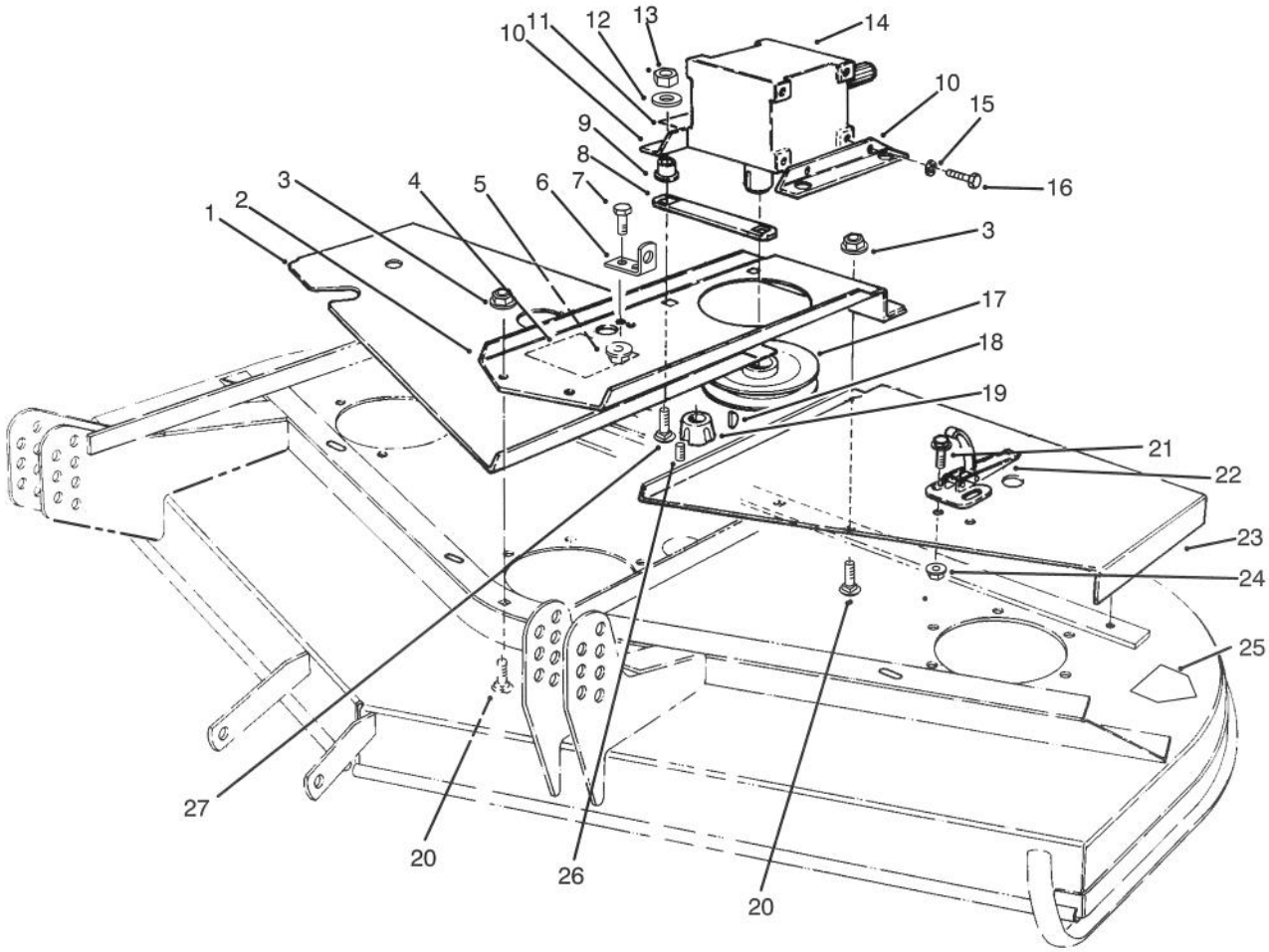

T–0578

COVERS AND GEAR BOX ASSEMBLY

Ref. No.	Part No.	Description	No. Used
1	72–9330	Cover R.H.	1
2	72–9230	Base – Gear Box	1
3	3290–357	Nut – Flange	4
4	51–3960	Decal – 52"	1
5	32128–20	Nut – Flange	2
6	72–9240	Bracket – Extension	1
7	322–4	Screw – Cap Hex. Hd.	2
8	68–9890	Cover – Front Gear Box	1
9	63–9750	ISO Mount – Gear Box	4
10	68–8560	Bracket – Gear Box	2
11	70–2560	Decal – Lube	1
12	63–8410	Washer – Lock	4
13	32153–2	Nut	4
14	68–6810	Gear Box	1

Ref. No.	Part No.	Description	No. Used
15	3253–21	Washer – Lock	4
16	323–4	Screw – Cap Hex. Hd.	4
17	63–9900	Pulley	1
18	3257–5	Key – Woodruff	1
19	27–6140	Bushing – Taper Lock (Incl. Ref. #26)	1
20	3231–22	Bolt – Carriage	4
21	3290–321	Screw – Mach. Hex. Hd.	6
22	249–21	Latch – Draw	3
23	80–0080	Cover L.H.	1
24	32128–17	Nut – Flange	4
25	43–8480	Decal – Danger	1
26	3245–9	Screw – Set Socket Hd.	2
27	3231–26	Bolt – Carriage	4

3315–682

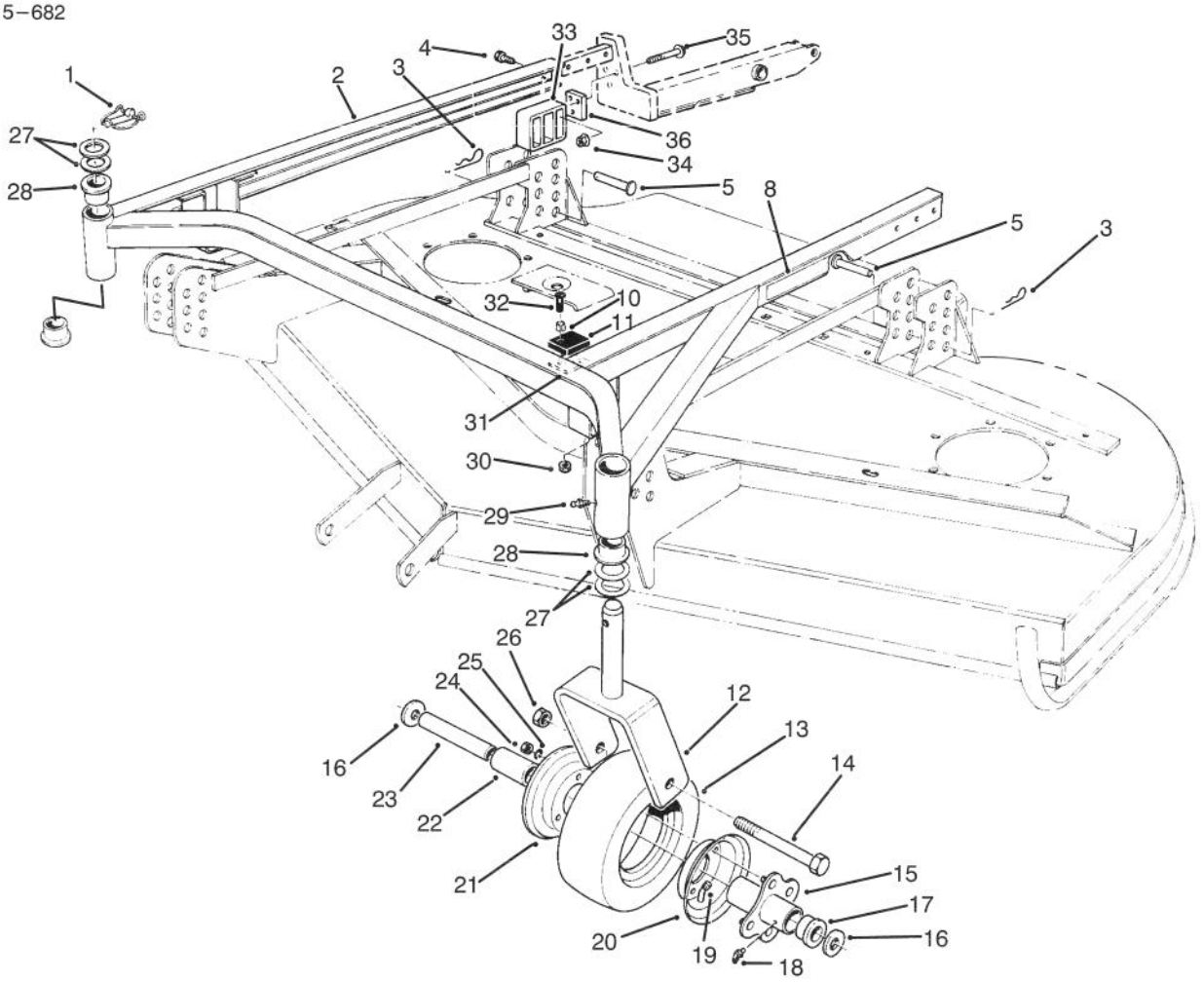

T–1250

CARRIER FRAME ASSEMBLY

Ref. No.	Part No.	Description	No. Used
1	3290–384	Pin – Lynch	2
2	83–4550	Frame Assembly (Incl. Ref. #28)	1
3	3290–355	Pin – Cotter Hair	4
4	325–32	Screw – Cap Hex. Hd.	6
5	283–55	Pin – Clevis	4
8	71–2760	Decal – H.O.C.	1
10	40–9520	Spacer – Split	4
11	40–0330	Cushion – Rubber	2
12	68–8900	Fork – Front Castor	2
13	68–8960	Tire	2
14	325–19	Screw – Cap Hex. Hd.	2
15	68–8940	Hub – Center	2
16	3256–6	Washer – Flat	4
17	62–5580	Bushing	4
18	302–61	Fitting – Grease	2
19	68–8950	Tube w/Valve	2
20	68–8920	Wheel Half – Female	2
21	68–8930	Wheel Half – Male	2

Ref. No.	Part No.	Description	No. Used
22	62–5570	Bearing – Roller	2
23	68–8980	Bushing – Spanner	2
24	3219–2	Nut – Hex.	8
25	3253–4	Washer – Lock	8
26	32153–5	Nut – Lock	2
27	3–6781	Washer – Thrust	8
28	28–9290	Bushing – Special	4
29	302–5	Fitting – Grease	2
30	3296–2	Nut – Lock	4
31	42–6200	Shim – Cushion	3
32	32122–28	Screw – Mach. Truss Hd.	4
33	83–4520	Cradle – Rear	2
34	32128–40	Nut – Flange	6
35	66–9302	Screw – Flange Hd.	6
36	83–4580	Spacer	2
*	13–3869	Castor Wheel Assembly (Inc. Ref. #13, 15, 17–22 & 24–25)	2

*Not Illustrated

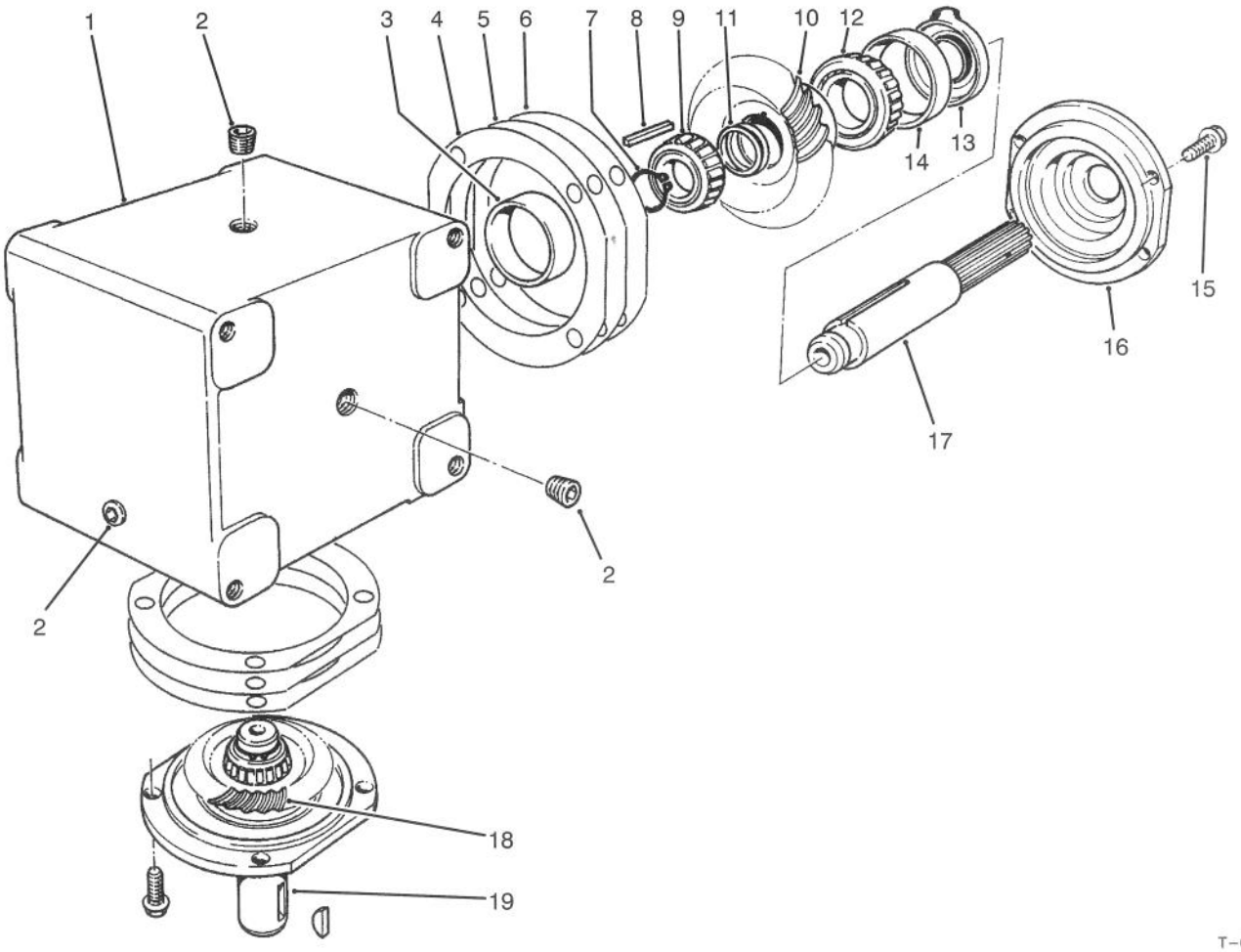

T–0977

GEAR BOX ASSEMBLY NO. 68–6810

Ref. No.	Part No.	Description	No. Used
1	68–7030	Housing	1
2	62–3490	Plug – Pipe (Solid)	4
3	62–3360	Cup – Bearing	2
4	62–3420	Gasket (.015)	A/R
5	62–3430	Gasket (.005)	A/R
6	62–3440	Gasket (.003)	A/R
7	68–7070	Ring – Retaining	2
8	62–3380	Key	2
9	62–3370	Cone – Bearing	2
10	68–7080	Gear	1

Ref. No.	Part No.	Description	No. Used
11	72–9370	Shim (.020)	2
12	62–3330	Cone – Gear	1
13	62–3400	Seal	2
14	62–3340	Cup – Bearing	2
15	62–3310	Screw – Cap	8
16	62–3410	Cap	2
17	68–7040	Shaft	1
18	68–7060	Gear	1
19	68–7050	Shaft	1

3315–682

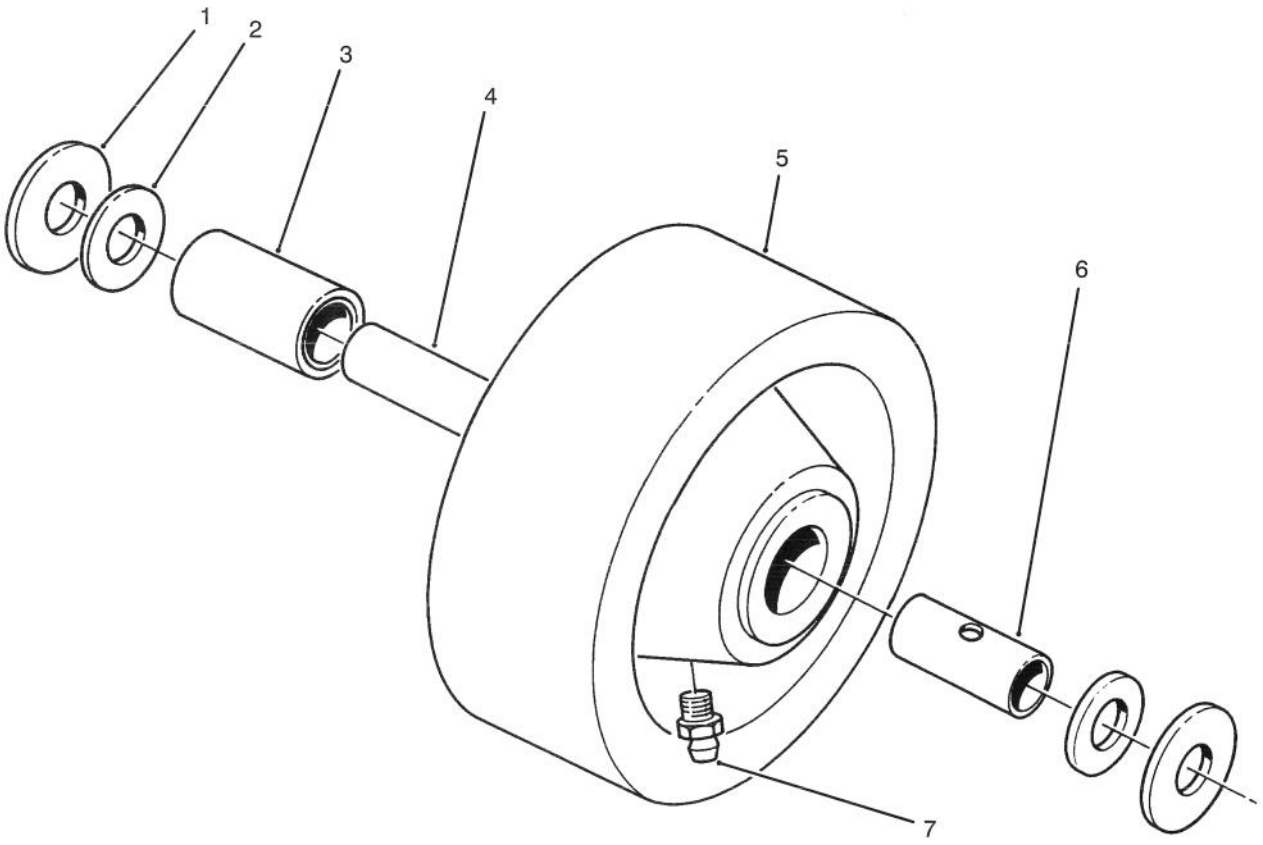

T–0633

PHENOLIC WHEEL ASSEMBLY NO. 27–1050 (Optional)

Ref. No.	Part No.	Description	No. Used
1	27–1170	Washer – Thrust	2
2	27–1180	Retainer – Bearing	2
3	27–1210	Bearing – Roller	1
†4	68–8980	Bushing – Spanner	1

Ref. No.	Part No.	Description	No. Used
5	27–1190	Wheel – Caster	1
6	27–1200	Bushing – Spanner	1
7	302–55	Fitting – Grease	1

†Must be ordered separately for use with 1/2" bolt.

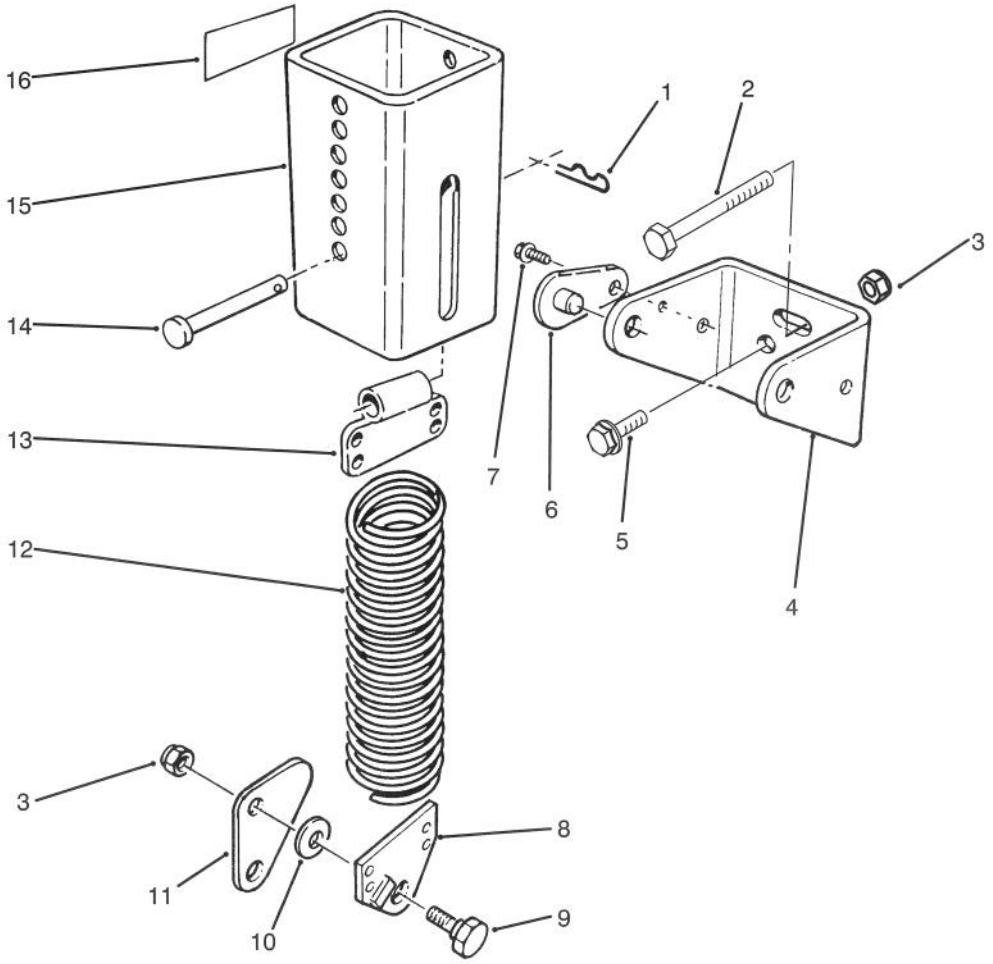

T–1217A

COUNTER BALANCE

Ref. No.	Part No.	Description	No. Used
1	3290–355	Pin – Hair Cotter	1
2	323–11	Screw – Cap Hex. Hd.	2
3	3296–44	Nut – Lock	4
4	66–8460	Bracket – Mounting	1
5	3234–11	Screw – Flange Hd.	2
6	70–7920	Assembly – Pin, Lock	2
7	12–3270	Screw – Self Tapping	2
8	66–8420	End – Spring	1
9	46–3380	Bolt – Shoulder	2

Ref. No.	Part No.	Description	No. Used
10	3256–24	Washer – Flat	2
11	66–8450	Link – Knee	1
12	66–8390	Spring – Extension	1
13	70–7940	End – Spring	1
14	283–69	Pin – Clevis	1
15	70–7970	Assembly – Cover, Spring	1
16	55–4300	Decal – Caution	2
*	70–8091	Counter Balance Assembly (Incl. Ref.# 1–16	1

TORO PART NUMBER INDEX

Part No.	Description	Pg. No.	Ref. No.	Qty.
3-6781	Washer - Thrust	4	27	8
5-1077	Key - Square	1	6	1
7-0081	Washer	1	11	1
7-4150	Washer	1	17	3
12-3270	Screw - Self Tapping	7	7	2
13-3869	Castor Wheel Assembly	4	*	2
27-0870	Assembly - Spindle	2	*	3
27-0920	Spindle Shaft	1	27	3
27-0950	Spacer - Spindle Bearing	1	32	3
27-0970	Pulley	1	18	3
27-0990	Blade	1	28	3
27-1160	V-Belt	1	14	1
27-1170	Washer - Thrust	6	1	2
27-1180	Retainer - Bearing	6	2	2
27-1190	Wheel - Caster	6	5	1
27-1200	Bushing - Spanner	6	6	1
27-1210	Bearing - Roller	6	3	1
27-6140	Bushing - Taper Lock	3	19	1
27-7680	Ring - Deck Support	1	22	2
27-8580	Idler Socket	1	7	1
28-9060	Plate - Idler	1	5	1
28-9290	Bushing - Special	4	28	4
29-4820	Roller	2	37	2
40-0330	Cushion - Rubber	4	11	2
40-6400	Shaft - Roller	2	35	1
40-9520	Spacer - Split	4	10	4
42-6200	Shim - Cushion	4	31	3
43-8480	Decal - Danger	1	1	1
43-8480	Decal - Danger	3	25	1
44-2200	Screw - Blade	1	31	3
46-3380	Bolt - Shoulder	7	9	2
46-8530	Assembly - Bearing	1	20	3
51-3960	Decal - 52"	3	4	1
55-4300	Decal - Caution	7	16	2
57-0690	Pin - Cotter, Special	2	38	1
61-4160	Housing - Spindle	1	25	3
62-3310	Screw - Cap	5	15	8
62-3330	Cone - Gear	5	12	1
62-3340	Cup - Bearing	5	14	2
62-3360	Cup - Bearing	5	3	2
62-3370	Cone - Bearing	5	9	2
62-3380	Key	5	8	2
62-3400	Seal	5	13	2
62-3410	Cap	5	16	2
62-3420	Gasket (.015)	5	4	A/R
62-3430	Gasket (.005)	5	5	A/R
62-3440	Gasket (.003)	5	6	A/R
62-3490	Plug - Pipe (Solid)	5	2	4
62-5570	Bearing - Roller	4	22	2
62-5580	Bushing	4	17	4
63-8410	Washer - Lock	3	12	4
63-9750	ISO Mount - Gear Box	3	9	4
63-9900	Pulley	3	17	1
65-5940	Pulley - Idler	1	10	1
65-5950	Bushing	1	12	1
66-1340	Decal - Danger	1	33	2
66-8390	Spring - Extension	7	12	1
66-8420	End - Spring	7	8	1
66-8450	Link - Knee	7	11	1
66-8460	Bracket - Mounting	7	4	1
66-9302	Screw - Flange Hd.	4	35	6
67-5360	Decal - Shield Missing	1	8	2
68-6810	Gear Box	3	14	1
68-7030	Housing	5	1	1
68-7040	Shaft	5	17	1
68-7050	Shaft	5	19	1
68-7060	Gear	5	18	1
68-7070	Ring - Retaining	5	7	2
68-7080	Gear	5	10	1
68-8340	Decal - Blade Bolt Torque	1	23	1
68-8560	Bracket - Gear Box	3	10	2
68-8900	Fork - Front Castor	4	12	2
68-8920	Wheel Half - Female	4	20	2
68-8930	Wheel Half - Male	4	21	2
68-8940	Hub - Center	4	15	2
68-8950	Tube w/Valve	4	19	2
68-8960	Tire	4	13	2
68-8980	Bushing - Spanner	6	{4	1
68-8980	Bushing - Spanner	4	23	2
68-9890	Cover - Front Gear Box	3	8	1
70-2560	Decal - Lube	3	11	1
70-7920	Assembly - Pin, Lock	7	6	2
70-7940	End - Spring	7	13	1
70-7970	Assembly - Cover, Spring	7	15	1
70-8091	Counter Balance Assembly	7	*	1
71-2760	Decal - H.O.C.	4	8	1
72-9230	Base - Gear Box	3	2	1
72-9240	Bracket - Extension	3	6	1
72-9260	Cutting Deck	1	34	1
72-9330	Cover R.H.	3	1	1
72-9360	Cup - Anti Scalp	1	29	3
72-9370	Shim (.020)	5	11	2
80-0080	Cover L.H.	3	23	1
83-4520	Cradle - Rear	4	33	2
83-4550	Frame Assembly	4	2	1
83-4580	Spacer	4	36	2
249-21	Latch - Draw	3	22	3
253-139	Seal - Wave	1	19	6
283-55	Pin - Clevis	4	5	4
283-69	Pin - Clevis	7	14	1
302-2	Fitting - Grease	1	15	3
302-5	Fitting - Grease	4	29	2
302-55	Fitting - Grease	6	7	1
302-61	Fitting - Grease	4	18	2
322-4	Screw - Cap Hex. Hd.	3	7	2
323-4	Screw - Cap Hex. Hd.	3	16	4
323-11	Screw - Cap Hex. Hd.	7	2	2
325-19	Screw - Cap Hex. Hd.	4	14	2
325-32	Screw - Cap Hex. Hd.	4	4	6
3211-8	Screw - Cap Hex. Hd.	1	13	1
3219-2	Nut - Hex.	4	24	8
3231-22	Bolt - Carriage	3	20	4
3231-22	Bolt - Carriage	1	21	18
3231-26	Bolt - Carriage	3	27	4
3234-11	Screw - Flange Hd.	7	5	2
3245-9	Screw - Set Socket Hd.	3	26	2
3253-4	Washer -Lock	4	25	8
3253-21	Washer - Lock	3	15	4
3253-27	Washer - Lock	1	30	3
3256-6	Washer - Flat	4	16	4
3256-24	Washer - Flat	7	10	2
3256-24	Washer - Flat	1	24	18
3256-27	Washer - Flat	1	3	1
3257-5	Key - Woodruff	3	18	1
3272-11	Pin - Cotter	2	36	1
3290-321	Screw - Mach. Hex. Hd.	3	21	6
3290-355	Pin - Cotter Hair	4	3	4
3290-355	Pin - Hair Cotter	7	1	1
3290-357	Nut - Flange	3	3	4
3290-384	Pin - Lynch	4	1	2
3296-2	Nut - Lock	4	30	4
3296-5	Nut - Lock	1	9	1
3296-33	Nut - Lock	1	4	1
3296-44	Nut - Lock	7	3	4
3296-357	Nut - Flange	1	2	2
32122-28	Screw - Mach. Truss Hd.	4	32	4
32128-17	Nut - Flange	3	24	4
32128-20	Nut - Flange	3	5	2
32128-21	Nut - Flange	1	26	18
32128-40	Nut - Flange	4	34	6
32146-20	Nut - Hex. Lock, Jam	1	16	3
32153-2	Nut	3	13	4
32153-5	Nut - Lock	4	26	2

*Not Illustrated