FORM NO. 3315–684 Rev. A

TORO®

MODEL NO. 30504

PARTS CATALOG

KIT 9 CU. FT. HOPPER

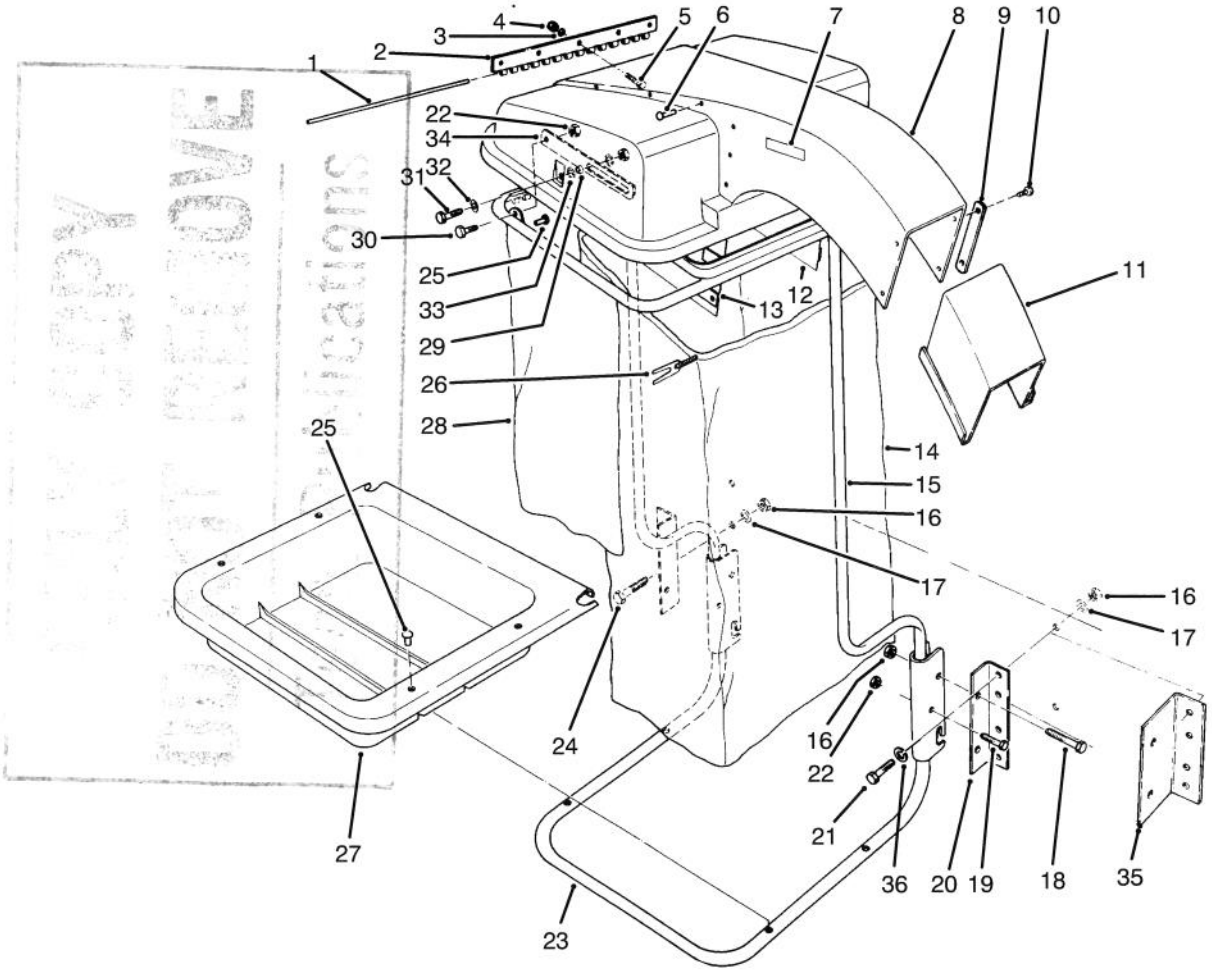

T–0603A

9 CU. FT. HOPPER ASSEMBLY

Ref. No.	Part No.	Description	No. Used
1	43–1000	Pin – Hinge, Hood	1
2	43–0610	Hinge – Half	1
3	3256–14	Washer – Flat	5
4	3296–2	Nut – Lock	5
5	3290–134	Screw – Mach. Hex. Hd.	5
6	3290–412	Rivet – Pop	14
7	43–1100	Decal – Caution	2
8	13–1649	Hood Assembly (Incl. Ref. #7)	1
9	67–1730	Plate – Nut	2
10	3274–31	Screw – Button Head	4
11	77–0680	Extension – Snout	1
12	43–0600	Screen – Left Hand	1
13	43–0570	Screen – Right Hand	1
14	43–0990	Bag – Cloth 32" (7 bushel capacity)	1
*14	43–0980	Bag – Cloth 38" (10 bushel capacity) (Optional)	1
15	67–7500	Upper Support Tube Assy. (Incl. Ref. #25 & 28)	1
16	32152–2	Nut – Lock	12
17	3256–3	Washer – Flat	8
18	323–11	Screw – Cap Hex. Hd.	4
19	322–11	Screw – Cap Hex. Hd.	2
20	43–1010	Bracket – Frame (For use with 52" Blower)	4
21	323–7	Screw – Cap Hex. Hd.	7
22	32152–1	Nut – Lock	6
23	43–0720	Lower Support Tube Assy. (Incl. Ref. #25 & 27)	1
24	323–10	Screw – Cap Hex. Hd.	1

Copyright 1992 The Toro Company, Rev. 1994
All Rights Reserved

TPS

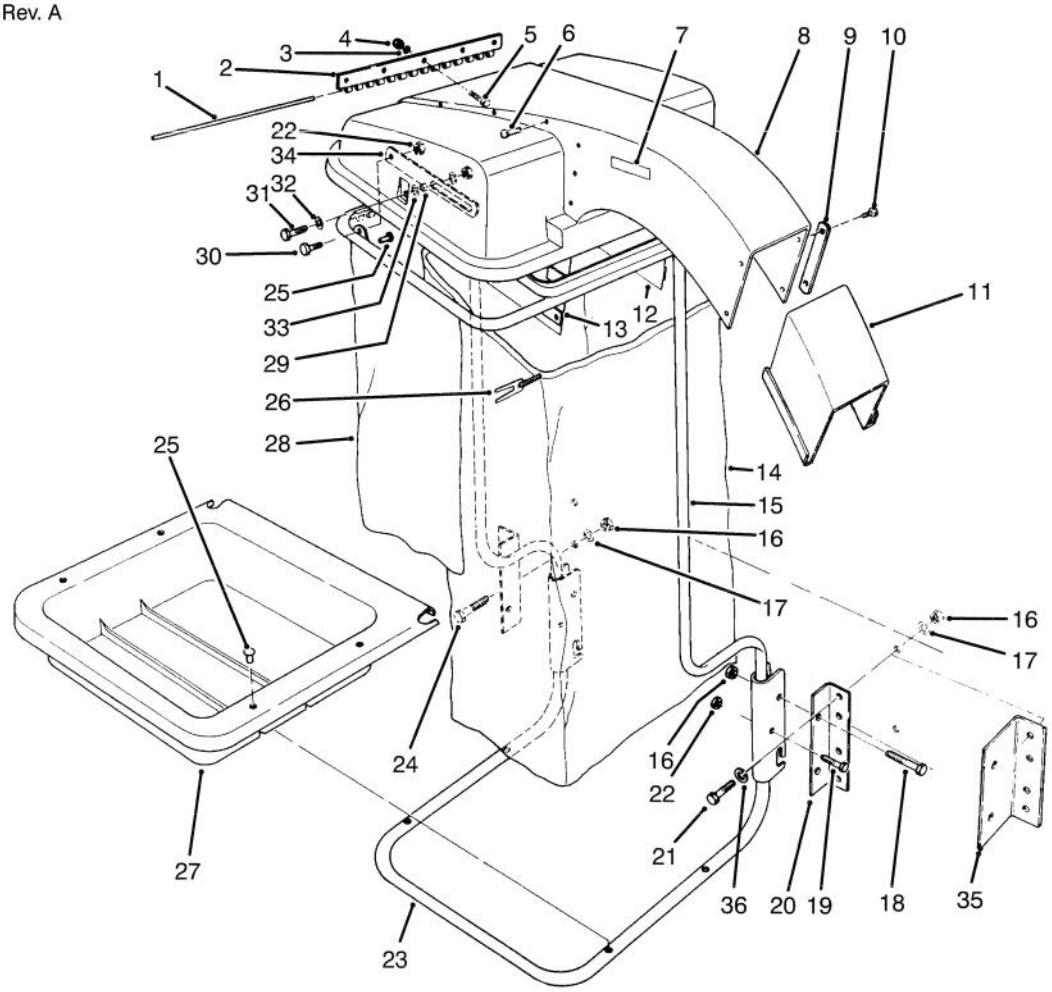

T–0603A

9 CU. FT. HOPPER ASSEMBLY (Continued)

Ref. No.	Part No.	Description	No. Used
25	3290–409	Rivet – Pop	21
26	3–2781	Retainer – Cord	1
*†	36–7770	Retainer – Cord (Optional)	1
27		Tray – Lower	1
28		Skirt – Bagging Frame	1
29	43–1020	Spacer – Pivot Arm	2
30	322–3	Screw – Cap Hex. Hd.	2
31	322–4	Screw – Cap Hex. Hd.	2

Ref. No.	Part No.	Description	No. Used
32	3256–23	Washer – Flat	2
33	3256–57	Washer – Fender	4
34	43–1051	Stop – Hood	2
35	76–1990	Bracket – Frame (For use with 62" Blower)	4
36	3253–21	Washer – Lock	2
*	44–9720	Template – Bracket	1

*Not Illustrated
†For use with 30 Gallon Plastic Bag.

Litho in U.S.A.
GG-94105