Form No. 3360–140 Rev A

TORO®

Groundsmaster® 580-D

Traction and Cutting Units

Model No. 30582—280000001 and Up

Model No. 30583—280000001 and Up

Operator's Manual

CE

English (EN, GB)

Warning

CALIFORNIA

Proposition 65 Warning

Diesel engine exhaust and some of its constituents are known to the State of California to cause cancer, birth defects, and other reproductive harm.

Contents

	Page
Introduction	3
Safety	3
Safe Operating Practices	3
Toro Riding Mower Safety	5
Sound Pressure Level	6
Sound Power Level	6
Vibration Level	6
Safety and Instruction Decals	7
Specifications	13
Traction Unit	13
All Cutting Units	14
Triflex Cutting Unit (Front)	14
Outboard Cutting Units	15
Dimensions	15
Optional Equipment	15
Setup	16
Checking the Batteries	16
Before Operating	18
Checking the Engine Oil	18
Checking the Cooling System	19
Checking the Hydraulic System Fluid	19
Filling the Fuel Tank	20
Checking the Tire Pressure	20
Checking Systems Operation	20
Checking Cutting Unit Mismatch	21
Adjusting the Height of Cut	21
Adjusting the Skids	22
Operation	23
Controls	23
Starting and Stopping the Engine	27
Draining Water from the Fuel Filter	28
Bleeding the Fuel System	28
Bleeding the Fuel System	28
Diagnostic Light	29
Diagnostic ACE Display	29
Checking the Interlock Switches	29
Checking the Warning Indicator Lights	33
Pushing or Towing the Machine	33
Operating Characteristics	33
Four Wheel Drive Operation	34
Maintenance	36
Recommended Maintenance Schedule	36
Daily Maintenance Checklist	37
Service Interval Chart	38
Lubrication	39
Engine Oil and Filter	41
Replacing Water Separator Filter Element	42
Replacing Fuel Filter	42
Engine Cooling System	43
General Air Cleaner Maintenance	44
Servicing the Air Cleaner	44
Servicing the Hydraulic System	45
Servicing the Planetary Gear Drive	47
Servicing the Battery	48
Fuses and Circuit Breaker	49
Servicing the Brake System	49
Wheels and Tires	50
Cutting Unit Lubrication	50
Blade Maintenance	50
Blade Bolt Torque	51
Checking for a Bent Blade	52
Removing the Cutting Unit Blade	52
Inspecting and Sharpening the Blade	52
Inspecting and Adjusting Cutting Unit Belt Tension	53
Replacing the Blade Drive Belts	54
Separating the Cutting Units from the Traction Unit	56
Checking and Correcting Cutting Blade Mismatch	56
Adjusting the Winglet Stabilizers	57
Adjusting the Traction Control Rod	58
Cylinder Head Bolts	58
Engine Valve Clearance	58
Inspect and Adjust Fuel Injection Nozzles	58
Electrical Schematic – Model 30582	59
Electrical Schematic – Model 30583	60
Hydraulic Schematic – Model 30582	61
Hydraulic Schematic – Model 30583	62
The Toro General Commercial Products Warranty	64
Introduction	3

© 2008 by The Toro Company
8111 Lyndale Avenue South
Bloomington, MN 55420-1196

All Rights Reserved

Printed in the USA

Introduction

Read this manual carefully to learn how to operate and maintain your product properly. The information in this manual can help you and others avoid injury and product damage. Although Toro designs and produces safe products, you are responsible for operating the product properly and safely.

Whenever you need service, genuine Toro parts, or additional information, contact an Authorized Service Dealer or Toro Customer Service and have the model and serial numbers of your product ready. A plate with the model and serial numbers is located on the left bulkhead below the operator's seat and on the rear channel of each cutting unit.

Write the product model and serial numbers in the space below:

Model No. _____

Serial No. _____

This manual identifies potential hazards and has special safety messages that help you and others avoid personal injury and even death. ***Danger***, ***Warning***, and ***Caution*** are signal words used to identify the level of hazard. However, regardless of the hazard, be extremely careful.

Danger signals an extreme hazard that *will* cause serious injury or death if you do not follow the recommended precautions.

Warning signals a hazard that *may* cause serious injury or death if you do not follow the recommended precautions.

Caution signals a hazard that may cause minor or moderate injury if you do not follow the recommended precautions.

This manual uses two other words to highlight information. **Important** calls attention to special mechanical information and **Note:** emphasizes general information worthy of special attention.

Safety

This machine meets or exceeds CEN standard EN 836:1997 (when appropriate decals applied), and ANSI B71.4-2004 specifications in effect at the time of production when equipped with required weights as listed in the weight chart.

Improper use or maintenance by the operator or owner can result in injury. To reduce the potential for injury, comply with these safety instructions and always pay attention to the safety alert ⚠ symbol, which means CAUTION, WARNING, or DANGER—"personal safety instruction." Failure to comply with the instruction may result in personal injury or death.

Safe Operating Practices

The following instructions are from the CEN standard EN 836:1997, ISO standard 5395:1990, and ANSI B71.4-2004.

Training

- Read the operator's manual and other training material carefully. Be familiar with the controls, safety signs, and the proper use of the equipment.
- If the operator or mechanic can not read the language of this manual, it is the owner's responsibility to explain this material to them.
- Never allow children or people unfamiliar with these instructions to use or service the mower. Local regulations may restrict the age of the operator.
- Never mow while people, especially children, or pets are nearby.
- Keep in mind that the operator or user is responsible for accidents or hazards occurring to other people or their property.
- Do not carry passengers.
- All drivers and mechanics should seek and obtain professional and practical instruction. The owner is responsible for training the users. Such instruction should emphasize:
  - the need for care and concentration when working with ride-on machines;
  - control of a ride-on machine sliding on a slope will not be regained by the application of the brake. The main reasons for loss of control are:
    - insufficient wheel grip;
    - being driven too fast;
    - inadequate braking;
    - the type of machine is unsuitable for the task;

    - lack of awareness of the effect of ground conditions, especially slopes.

- The owner/user can prevent and is responsible for accidents or injuries occurring to himself or herself, other people, or property.

Preparation

- While mowing, always wear substantial footwear, long trousers, hard hat, safety glasses, and hearing protection. Long hair, loose clothing, or jewelry may get tangled in moving parts. Do not operate the equipment when barefoot or wearing open sandals.
- Thoroughly inspect the area where the equipment is to be used and remove all objects which may be thrown by the machine.
- **Warning**—Fuel is highly flammable. Take the following precautions:
  - Store fuel in containers specifically designed for this purpose.
  - Refuel outdoors only and do not smoke while refueling.
  - Add fuel before starting the engine. Never remove the cap of the fuel tank or add fuel while the engine is running or when the engine is hot.
  - If fuel is spilled, do not attempt to start the engine but move the machine away from the area of spillage and avoid creating any source of ignition until fuel vapors have dissipated.
  - Replace all fuel tank and container caps securely.
- Replace faulty silencers/mufflers.
- Evaluate the terrain to determine what accessories and attachments are needed to properly and safely perform the job. Only use accessories and attachments approved by the manufacturer.
- Check that operator's presence controls, safety switches and shields are attached and functioning properly. Do not operate unless they are functioning properly.

Operation

- Do not operate the engine in a confined space where dangerous carbon monoxide fumes can collect.
- Mow only in daylight or in good artificial light.
- Before attempting to start the engine, disengage all blade attachment clutches, shift into neutral, and engage the parking brake.
- Do not put hands or feet near or under rotating parts. Keep clear of the discharge opening at all times.
- Remember there is no such thing as a safe slope. Travel on grass slopes requires particular care. To guard against overturning:
  - do not stop or start suddenly when going up or downhill;
  - machine speeds should be kept low on slopes and during tight turns;
  - stay alert for humps and hollows and other hidden hazards;
  - never mow across the face of the slope, unless the mower is designed for this purpose.
  - Use counterweight(s) or wheel weights when suggested in the operator's manual.
- Stay alert for holes in the terrain and other hidden hazards.
- Watch out for traffic when crossing or near roadways.
- Stop the blades from rotating before crossing surfaces other than grass.
- When using any attachments, never direct discharge of material toward bystanders nor allow anyone near the machine while in operation.
- Never operate the machine with damaged guards, shields, or without safety protective devices in place. Be sure all interlocks are attached, adjusted properly, and functioning properly.
- Do not change the engine governor settings or overspeed the engine. Operating the engine at excessive speed may increase the hazard of personal injury.
- Before leaving the operator's position:
  - stop on level ground;
  - disengage the power take-off and lower the attachments;
  - change into neutral and set the parking brake;
  - stop the engine and remove the key.
- Disengage drive to attachments when transporting or not in use.
- Stop the engine and disengage drive to attachment
  - before refuelling;
  - before making height adjustment unless adjustment can be made from the operator's position.
  - before clearing blockages;
  - before checking, cleaning or working on the mower;

– after striking a foreign object or if an abnormal vibration occurs. Inspect the mower for damage and make repairs before restarting and operating the equipment. Torque all the spindle pulley nuts to 130–150 ft–lbs.;

- Reduce the throttle setting before stopping the engine and, if the engine is provided with a fuel shut-off valve, turn the fuel off at the conclusion of mowing.
- Keep hands and feet away from the cutting units.
- Look behind and down before backing up to be sure of a clear path.
- Slow down and use caution when making turns and crossing roads and sidewalks. Stop blades from rotating.
- Be aware of the mower discharge direction and do not point it at anyone.
- Do not operate the mower under the influence of alcohol or drugs.
- Use care when loading or unloading the machine onto a trailer or truck.
- Use care when approaching blind corners, shrubs, trees, or other objects that may obscure vision.
- This machine is not designed or equipped for on–road use and is a “slow–moving vehicle.” If you must cross or travel on a public road, you should be aware of and comply with local regulations, such as required lights, slow moving vehicle signs, and reflectors.

Maintenance and Storage

- Keep all nuts, bolts and screws tight to be sure the equipment is in safe working condition.
- Never store the equipment with fuel in the tank inside a building where fumes may reach an open flame or spark.
- Allow the engine to cool before storing in any enclosure.
- To reduce the fire hazard, keep the engine, silencer/muffler, battery compartment fuel storage area, cutting units and drives free of grass, leaves, or excessive grease. Clean up oil or fuel spillage.
- Keep all parts in good working condition and all hardware and hydraulic fittings tightened. Replace all worn or damaged parts and decals.
- If the fuel tank has to be drained, do this outdoors.
- Be careful during adjustment of the machine to prevent entrapment of the fingers between moving blades and fixed parts of the machine.
- On multi-spindle mowers, take care as rotating one blade can cause other blades to rotate.
- Disengage drives, lower the cutting units, set parking brake, stop engine and remove key. Wait for all movement to stop before adjusting, cleaning or repairing.
- Use jack stands to support components when required.
- Carefully release pressure from components with stored energy.
- Disconnect battery before making any repairs. Disconnect the negative terminal first and the positive last. Reconnect positive first and negative last.
- Use care when checking the blades. Wear gloves and use caution when servicing them.
- Keep hands and feet away from moving parts. If possible, do not make adjustments with the engine running.
- Charge batteries in an open well ventilated area, away from spark and flames. Unplug charger before connecting or disconnecting from battery. Wear protective clothing and use insulated tools.

Toro Riding Mower Safety

The following list contains safety information specific to Toro products or other safety information that you must know that is not included in the CEN, ISO, or ANSI standard.

This product is capable of amputating hands and feet and throwing objects. Always follow all safety instructions to avoid serious injury or death.

Use of this product for purposes other than its intended use could prove dangerous to user and bystanders.

Warning

Engine exhaust contains carbon monoxide, which is an odorless, deadly poison that can kill you.

Do not run engine indoors or in an enclosed area.

- Before operating a machine with ROPS (roll over protection system), be certain that the seat belts are attached and the seat is latched to prevent the seat from pivoting forward.
- Know how to stop the engine quickly.
- Do not operate the machine while wearing tennis shoes or sneakers.
- Wearing safety shoes and long pants is advisable and required by some local ordinances and insurance regulations.
- Handle fuel carefully. Wipe up any spills.

- Check the safety interlock switches daily for proper operation. If a switch should fail, replace the switch before operating the machine.
- Before starting the engine, sit on the seat.
- Using the machine demands attention. To prevent loss of control:
  - Do not drive close to sand traps, ditches, creeks, embankments, or other hazards.
  - Reduce speed when making sharp turns. Avoid sudden stops and starts.
  - When near or crossing roads, always yield the right-of-way.
  - Apply the service brakes when going downhill to keep forward speed slow and to maintain control of the machine.
- When operating a machine on slopes, by banks, or drop offs, always have ROPS (roll–over protection system) installed.
- When operating a machine with a ROPS, always use a seat belt.
- Be certain that the seat belt can be released quickly if the machine is driven or rolls into a pond or water.
- Raise the cutting units when driving from one work area to another but they must be lowered when going down slopes to maintain steering control.
- Do not touch the engine, silencer/muffler, or exhaust pipe while the engine is running or soon after it has stopped because these areas could be hot enough to cause burns.
- On any hill, there is the possibility of tipping or rolling over, but the risk increases as the slope angle increases. Steep hills should be avoided.
- Engage traction drive slowly, always keep foot on traction pedal, especially when traveling downhill.
  - Use reverse on traction pedal for braking.
- If the machine stalls when climbing a slope, do not turn the machine around. Always back slowly, straight down the slope.
- When a person or pet appears unexpectedly in or near the mowing area, **stop mowing.** Careless operation, combined with terrain angles, ricochets, or improperly positioned guards can lead to thrown object injuries. Do not resume mowing until the area is cleared.

Maintenance and Storage

- Make sure all hydraulic line connectors are tight and all hydraulic hoses and lines are in good condition before applying pressure to the system.
- Keep your body and hands away from pin hole leaks or nozzles that eject hydraulic fluid under high pressure. Use paper or cardboard, not your hands, to search for leaks. Hydraulic fluid escaping under pressure can have sufficient force to penetrate the skin and cause serious injury. Seek immediate medical attention if fluid is injected into skin.
- Before disconnecting or performing any work on the hydraulic system, all pressure in the system must be relieved by stopping the engine and lowering the cutting units and attachments to the ground.
- Check all fuel lines for tightness and wear on a regular basis. Tighten or repair them as needed.
- If the engine must be running to perform a maintenance adjustment, keep hands, feet, clothing, and any parts of the body away from the cutting units, attachments, and any moving parts.
- To ensure safety and accuracy, have an Authorized Toro Distributor check the maximum engine speed with a tachometer.
- If major repairs are ever needed or if assistance is desired, contact an Authorized Toro Distributor.
- Use only Toro-approved attachments and replacement parts. The warranty may be voided if used with unapproved attachments.

Sound Pressure Level

This unit has an equivalent continuous A-weighted sound pressure level at the operator ear of 91 dBA, based on measurements of identical machines per EN 836 and ISO 11201.

Sound Power Level

This unit has a guaranteed sound power level of 105 dBA, based on measurements of identical machines per ISO 11094. The machine must be equipped with a CE Kit.

Vibration Level

This unit does not exceed a vibration level of 2.5 m/s^2 at the hands based on measurements of identical machines per EN 836 and EN 1033.

This unit does not exceed vibration level of 0.5 m/s^2at the posterior based on measurements of identical machines per EN 836 and EN 1032.

Safety and Instruction Decals

Safety decals and instructions are easily visible to the operator and are located near any area of potential danger. Replace any decal that is damaged or lost.

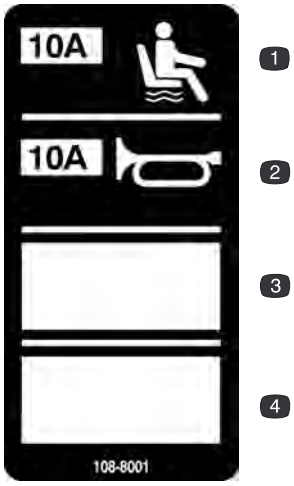

108-8001

1. 10 amp fuse for seat suspension
2. 10 amp fuse for horn
3. Open
4. Open

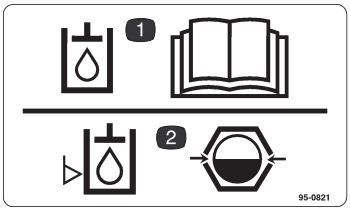

95-0821

1. Read the operator's manual for information on hydraulic oil.
2. View the hydraulic level oil through the sight glass.

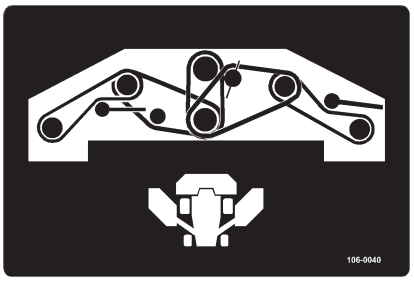

106-0040



72-4070



72-4080

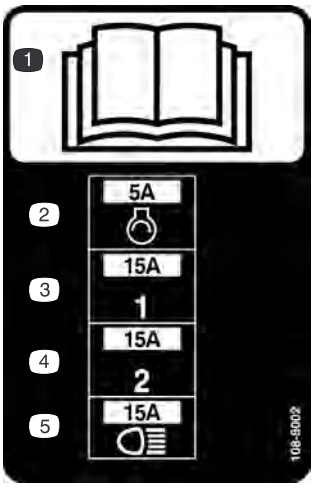

108-8002

1. Read the *Operator's Manual*.
2. 5 amp fuse for engine
3. 15 amp fuse for power supply one
4. 15 amp fuse for power supply two
5. 15 amp fuse for lights

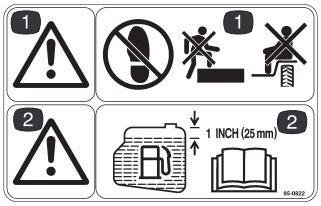

95-0822

1. Warning—do not step or ride on fender.
2. Warning—do not fill the fuel tank more than 1 in. (25 mm) below the bottom of the filler neck.



43-8480

1. Cutting hazard of hands and fingers



98-4387

1. Warning—wear hearing protection.



67-5360

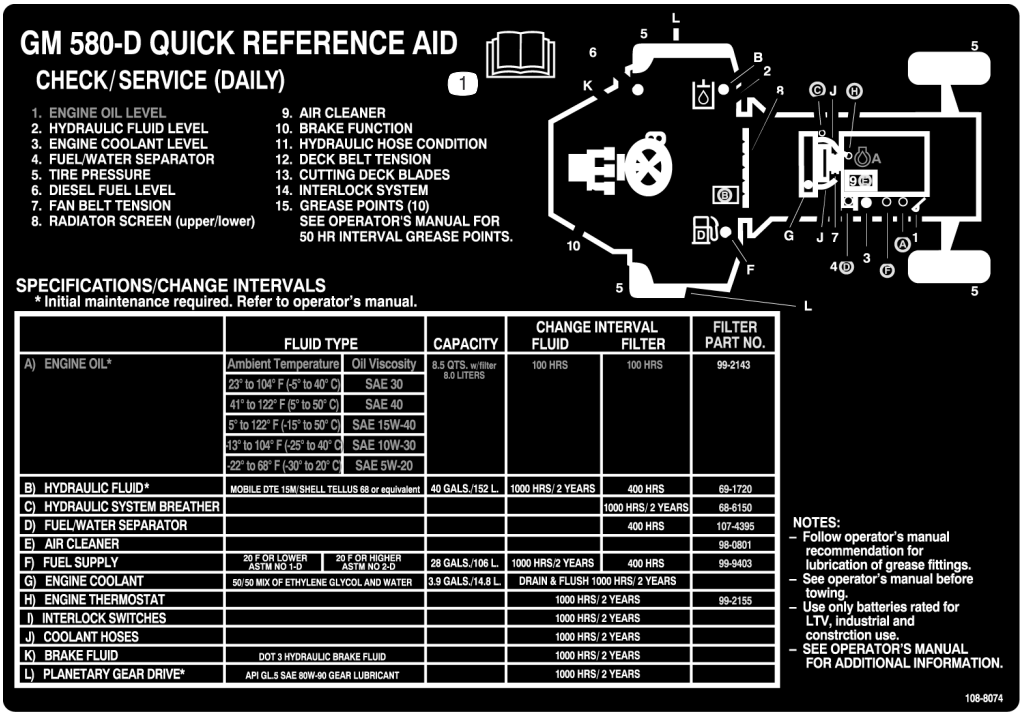

108-8074

1. Read the *Operator's Manual*.

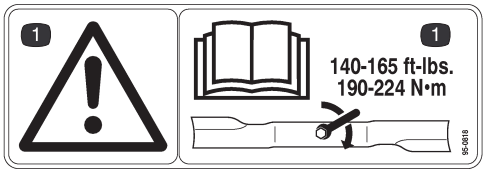

95-0818

1. Warning—torque the blade bolt to 140–165 ft.-lb. (190–224 N·m). Read the operator's manual for further instructions.

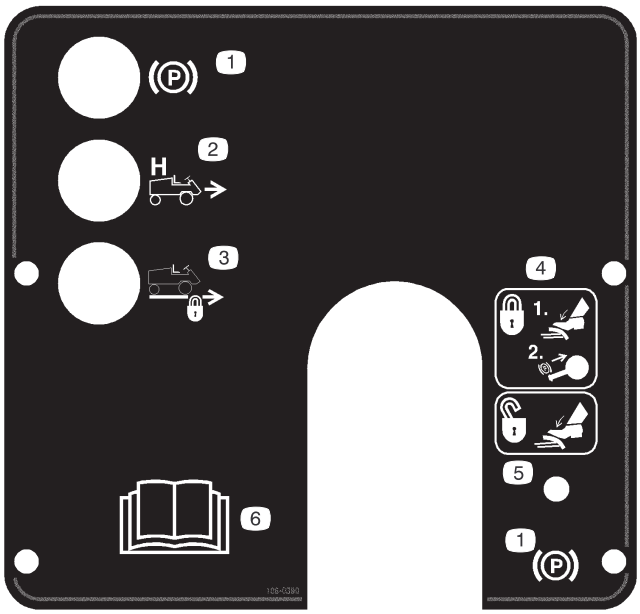

106-0390

1. Parking brake
2. High speed
3. Cruise control locked
4. To lock the parking brake, press the brake pedal and pull out the parking brake knob.
5. To unlock the parking brake, press the brake pedal.
6. Read the *Operator's Manual.*

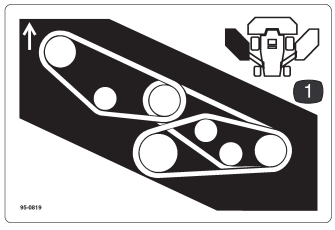

95-0819

1. Belt routing for left-hand cutting unit

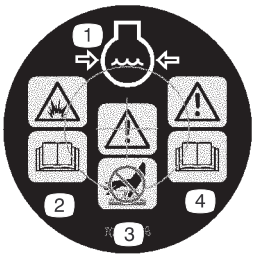

106-5976

1. Engine coolant under pressure
2. Explosion hazard—read the *Operator's Manual.*
3. Warning—do not touch the hot surface.
4. Warning—read the *Operator's Manual.*

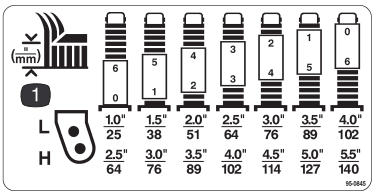

95-0845

1. Height-of-cut settings

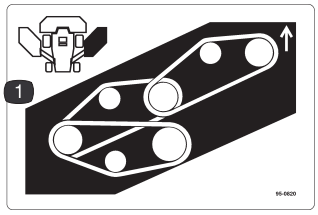

95-0820

1. Belt routing for right-hand cutting unit



66-1340



83-9150

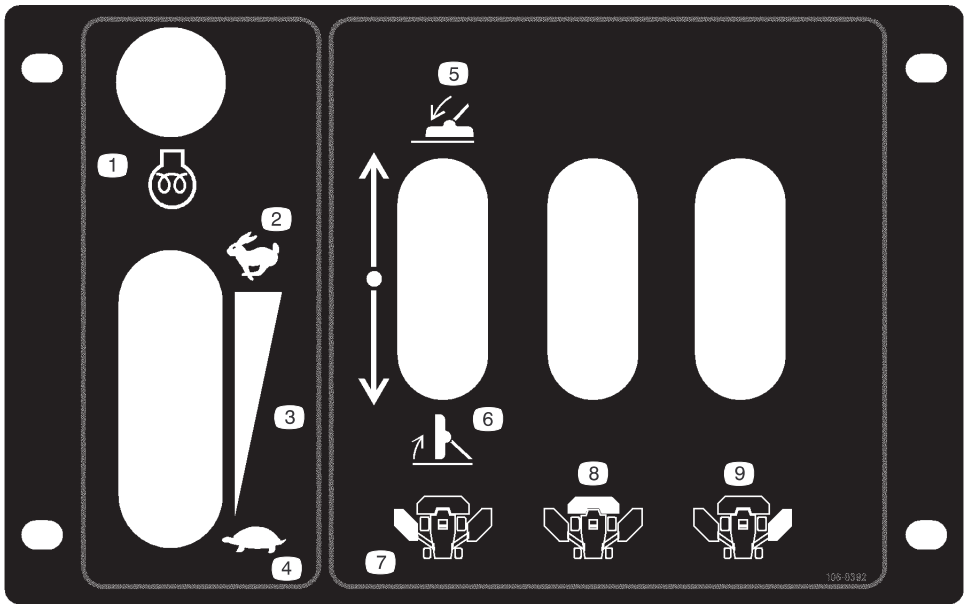

106-0392

1. Engine—preheat
2. Fast
3. Continuous variable setting
4. Slow
5. Lower the cutting unit
6. Raise the cutting unit
7. Left cutting unit
8. Center cutting unit
9. Right cutting unit

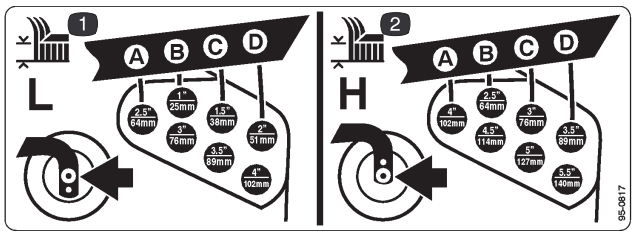

95-0817

1. Low range height-of-cut settings
2. High range height-of-cut settings

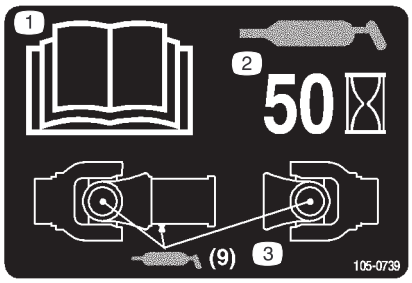

105-0739

1. Read the *Operator's Manual.*
2. Grease every 50 hours.
3. Add grease (9 grease points).

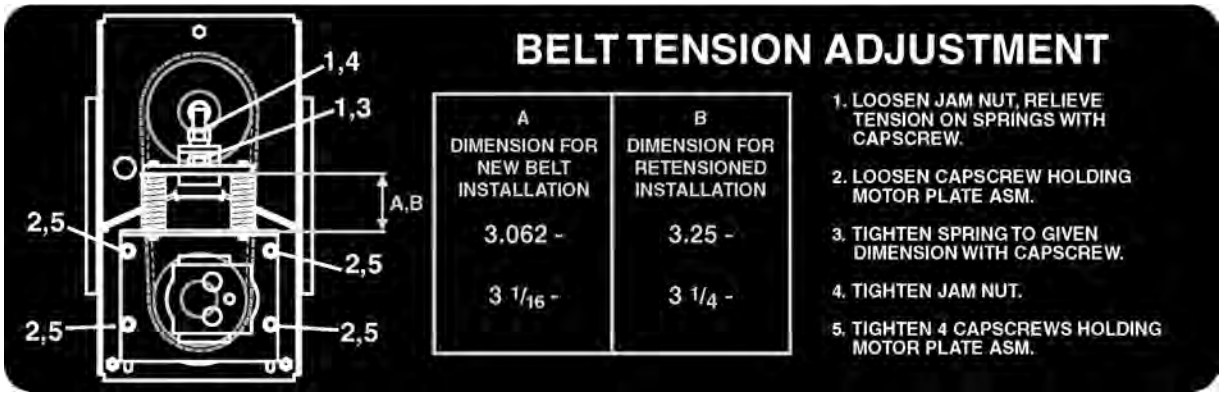

110–6126

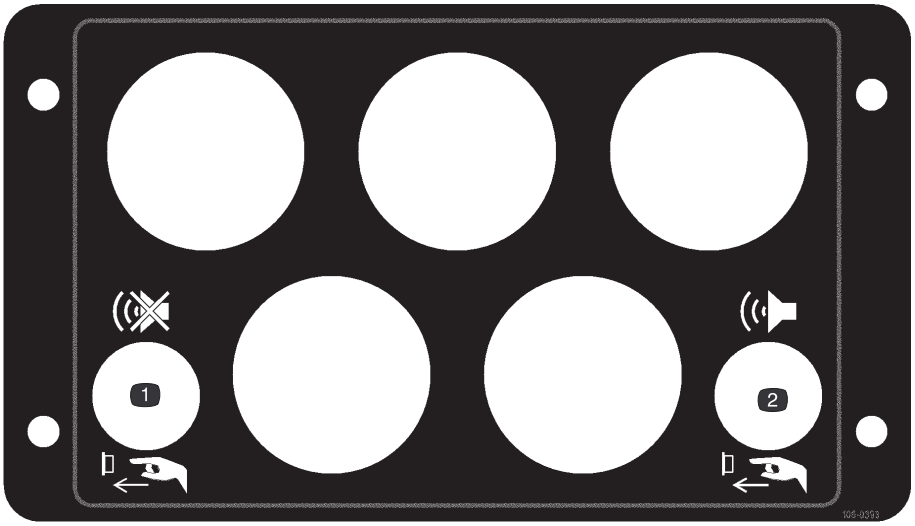

106-0393

1. Press the button to silence the alarm.
2. Press the button to test the warning lights.



107-1159



93-8053

1. Read the *Operator's Manual.*

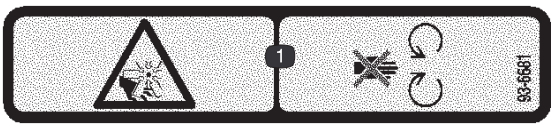

93-6681

1. Cutting/dismemberment hazard, fan—stay away from moving parts.

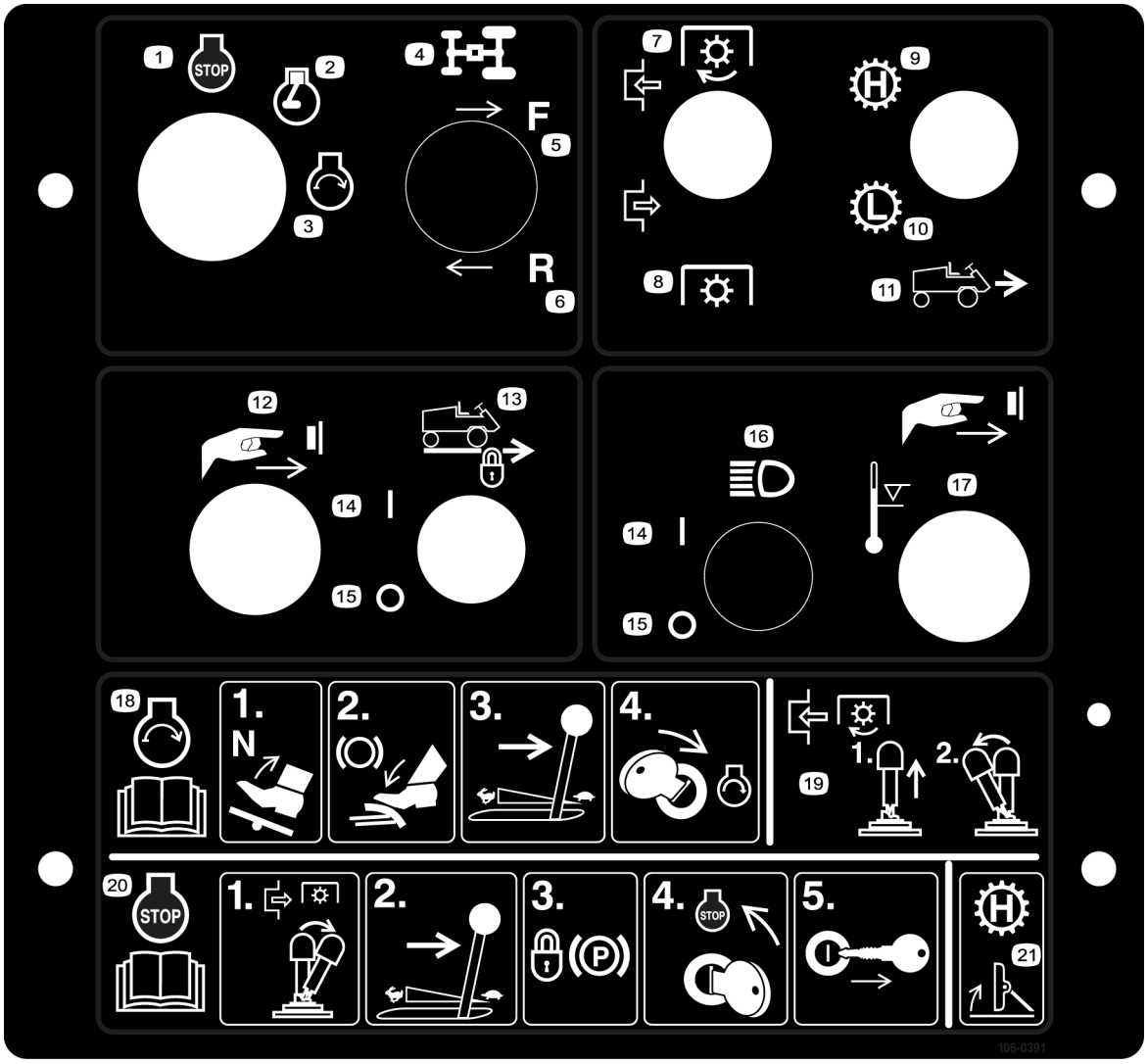

106-0391

1. Engine—stop
2. Engine—run
3. Engine—start
4. Flow divider
5. Forward
6. Reverse
7. Engage the power take-off (PTO).
8. Disengage the power take-off (PTO)
9. Transmission—high speed
10. Transmission—low speed
11. Forward machine speeds
12. Press the button to set the cruise control
13. Cruise control
14. On
15. Off
16. Headlights
17. Push the button to over-ride an overheated engine shutdown.
18. To start the engine, move the traction pedal to Neutral, press the brake pedal, move the throttle lever to Slow, and then turn the ignition key to Start; read the *Operators Manual.*
19. To engage the PTO, pull up on the PTO switch and move it forward.
20. To stop the engine, disengage the PTO, move the throttle lever to slow, set the parking brake, turn the ignition key to Stop, and remove the key; read the *Operators Manual.*
21. To switch the transmission to high speed, raise the attachment lift.

Specifications

Note: Specifications and design subject to change without notice.

Traction Unit

Engine	Mitsubishi, Model S4S-DT 4 cycle, four cylinder, overhead valve, 203.3 cu. in. (3331 cc) displacement, water cooled diesel. Rated 80 HP @2750 RPM. 19:1 compression ratio, direct injected and turbo-charged. Crankcase capacity: 8.5 qt. (8 l).
Air Cleaner	Heavy duty, centrifugal air type w/replaceable element.
Cooling System	Radiator w/wide-spaced fins (7 per in.). Variable speed fan controlled by engine temperature. Full flow hydraulic oil cooler (6 ±1 fins/in.). Coolant capacity 3.9 gal. (14.7 l) of 50/50 mixture of ethylene glycol and water.
Fuel System	Fuel tank capacity: 28 gal. (106 l) .
Electrical	12 volt automotive type system. Dual maintenance free batteries w/1300 Amp. cold cranking power at 0° F (18° C). 100 Amp. alternator with integral regulator.
Controls	Individual deck lift levers, High Range/Low Range ground speed selector, PTO and ignition switches. Hand throttle, ON/OFF cruise control switch, 4 wheel drive switch (Model 30583 only) and cruise engage button. Steering tower and wheel tilt lever and service brake pedal. Foot operated traction pedal and steering brake pedals with parking brake latch.
Warning Systems	Indicator lights and audible signals warn of low engine oil pressure, high water temperature, no charge, water in fuel, low hydraulic oil level, high hydraulic oil temperature, air cleaner clogged, and hydraulic oil filter needs service. Indicator lights alone indicate parking brake on, cruise control is engaged, machine is in High Range ground speed mode.
Interlock System	Prevents engine starting if traction pedal is out of neutral. Stops engine if operator either leaves seat or parking brake on with traction pedal out of neutral. Prevents PTO engagement if operator is out of seat, engine is off, or all cutting units are raised. Prevents engagement of High Range ground speed mode if a cutting unit is lowered, front cutting unit is not fully raised, or if engine is shut off.
Steering	14 in. (36 cm) patented tilt steering wheel and tower, released and locked by single control lever. Dual hydraulic cylinder power steering for extra sharp turning.
Seat and Storage	Premium seat w/armrests, backrest, and air ride suspension. Adjustable fore and aft travel, weight and height. Tool storage tray under hinged floor plate; storage and beverage holder alongside control panel.
Brakes	Enclosed, multiple front hydraulic disc brakes operated by right foot pedal. Mechanical steering brakes via two pedals which lock together for parking brake function. Dynamic braking through closes-loop hydrostatic drive.
Tires/Wheels	Front: two 31 x 12.50-15, 8-ply high floatation turf tires w/tubes Rear: two 23 x 10.5-12, 6-ply tubeless turf tire
Ground Speed	Infinitely variable Forward speeds: Low—0 to 7.5 MPH (12.1 km/h); High—0 to 20 MPH (32.2 km/h) 5.5 (8.9 km/h) mph (in mow with 4 wheel drive engaged) Reverse speeds: Low—0 to 3 MPH (4.8 km/h); High—0 to 8 MPH (12.9 km/h)
Ground Clearance	8 in. (20.3 cm).
Hydraulic Oil System and Reservoir	40 gal. (151 l) total system capacity. Reservoir capacity: 32 gal. (121 l). Replaceable spin-on 5 micron filter element.

Traction Unit (continued)

Traction System	Hydrostatic closed loop system driving gear reduction wheel drives. Has bypass valve for towing. Adjustable foot pedal with speed stop controls forward/reverse ground speed. Switch engaged cruise control, disengaged by service brake or ON/OFF switch. Cruise speed changeable without disengagement. The 4 wheel drive assist can be engaged or disengaged in forward or reverse, in the mow range with a three position switch (on position forward, momentary reverse).

All Cutting Units

Cutting Unit Drive System	All hydraulic drive. Initial cutting drive engagement via electric switch. Drive shuts off or engaged individually as cutting units are raised or lowered.
Automatic Weight Transfer	Patented automatic weight transfer from decks to traction unit under demanding traction situations for improved traction and deck floatation.
Cutting Unit Configuration	A 92 in. (234 cm) Triflex front center cutting unit and two 57 in. (145 cm) outboard cutting units.
Mowing Rate/Width	Mows up to 14-1/2 acres/hr (5.9 hectares) at 7.5 MPH (12.1 km/h) using all cutting units (assumes no overlap and stops).
Total Cutting Width	192 in. (488 cm)
Height-of-Cut Range	Low: 1 to 4 in. (2.5 to 10.2 cm) High: 2-1/2 to 5-1/2 in. (6.3 to 14 cm)
Blades	Interchangeable heat treated steel blades, 20 in. (50.8 cm) long, 1/4 in. (6.3 mm) thick and 2-1/2 in. (6.3 cm) wide. 5 blades on Triflex and 3 each on outboard units.
Anti-Scalp Devices	Cutting units equipped with adjustable skids. Anti-scalp cup on each blade assembly.

Triflex Cutting Unit (Front)

Type	Triflex front mounted rotary cutting unit with 5 blade spindles and 92 in. (234 cm) width of cut.
Trimming Ability	Trims to either side. 8 in. (20.3 cm) cutting unit offset from outside of wheel to trim side of front cutting unit on either side.
Height-of-Cut Adjustment	1/2 in. (12.7 mm) increments by spacers on front castor shafts and clevis pins on rear wheel forks.
Cutter Drive	Hydraulic gear motor. 3 VL belt to center cutting unit spindles, “B” section belt to wings. Splined shafts, each in two greaseable, tapered roller bearings in cast iron housings (greaseable from the top). Self tensioning and permanently lubricated belt idlers.
Castor Wheels	Two 10.50 x 3.50 and two 12 x 5.00 heavy duty, pneumatic castor wheels.

Outboard Cutting Units

Type	Two, three spindle, side mounted rotary cutting units each with a 57 in. (145 cm) width of cut.
Trimming Ability	Trims to either side. 58 in. (147 cm) cutting unit offset from outside of wheel to trim side of side cutting unit on either side.
Height-of-Cut Adjustment	1/2 in. (12.7 mm) increments by spacers on all castor shafts.
Cutter Drive	Hydraulic gear motor. Three “B” section belts to spindles.
Castor Wheels	Four 10.50 x 3.50 heavy duty, interchangeable, pneumatic castor wheels.
Cutting Unit Suspension	Outboard cutting unit arms pivot from center, sweep cutting units forward in mow and lift, and rotate cutting units down and back in transport. Arms have rubber mount design for shock absorption and more cutting unit floatation (patented). Adjustable, spring-loaded, breakaway arms release and rotate outboard cutting unit upon accidental impact. Automatically reset when cutting unit is raised. Cam lock links automatically secure outboard cutting units in transport position.

Dimensions

Machine Width (approx.)	Transport: 7 ft. 11 in. (241 cm) Mow: 16 ft. 3 in. (495 cm)
Machine Height (approx.)	Transport: 7 ft. 7 in. (231 cm) to top of raised cutting units Mow: 7 ft. (210 cm) to top of ROPS
Machine Overall Length (approx.)	14 ft. (427 cm)
Model 30582 Total Weight (with fluids) (approx.)	6540 lb. (2967 kg)
Model 30583 Total Weight (with fluids) (approx.)	6640 lb. (3012 kg)

Optional Equipment

Canopy option

Canopy w/ windshield option

Cab with Roll Over Protection System

Road Light Package

8 ft (244 cm) Rotary Broom

Air Conditioning

7 Foot Snow blower

Leaf Mulcher

Foam Filled Castor Tires

Front PTO Hydraulic Conversion Kit

Optional Tire

Setup

Note: Determine the left and right sides of the machine from the normal operating position.

Description	Qty.	Use
Deck tilt link Klik pin	1 2	Securing the front cutting unit in a vertical position for service (shipped in the tool box)
Adjusting screw Nut	1 1	Use when replacing front cutting unit blade drive belt
Height gauge	1	Use when replacing front cutting unit blade drive belt
Diagnostic ACE overlay	1	Troubleshooting aid
Parts Catalog	1	Ordering service parts.
Operator's manual	2	Read and understand before operating the machine.
Operator Training Material	1	View and understand before operating the machine.

Checking the Batteries

1. Unlatch the hood and left hand engine side panel (Fig. 1). Raise and prop hood open and remove the left side panel. Make sure hood prop is secured in one of the mounting brackets on hood.

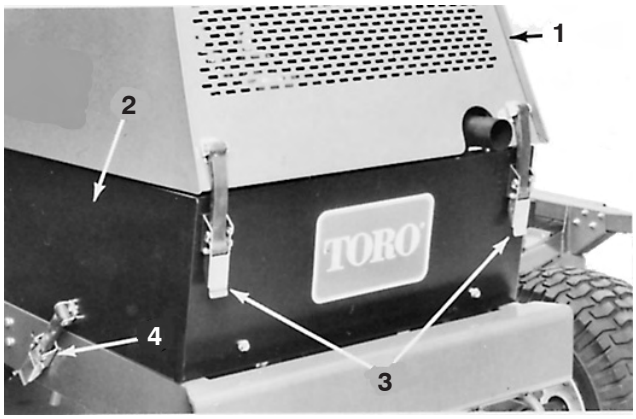

Figure 1

1. Engine hood
2. Left side panel
3. Hood latches
4. Side panel latch

2. Remove the capscrews securing the battery tray and slide the tray out (Fig. 2).

Warning

CALIFORNIA

Proposition 65 Warning

Battery posts, terminals, and related accessories contain lead and lead compounds, chemicals known to the State of California to cause cancer and reproductive harm. *Wash hands after handling*.

Warning

Battery terminals or metal tools could short against metal tractor components, causing sparks. Sparks can cause the battery gasses to explode, resulting in personal injury.

- **When removing or installing the battery, do not allow the battery terminals to touch any metal parts of the tractor.**
- **Do not allow metal tools to short between the battery terminals and metal parts of the tractor.**

3. Check both batteries for charge with a hydrometer. If batteries check acceptably, slide tray back in place, secure with capscrews and lockwashers and install side panel. If batteries require charging, proceed to step 4.

Warning

Incorrect battery cable routing could damage the tractor and cables, causing sparks. Sparks can cause the battery gasses to explode, resulting in personal injury.

- **Always *disconnect* the negative (black) battery cable before disconnecting the positive (red) cable.**
- **Always *reconnect* the positive (red) battery cable before reconnecting the negative (black) cable.**

4. Remove negative (–) battery cables from batteries (Fig. 2). Connect a 3 to 4 Amp battery charger to the posts. Charge the batteries at a rate of 3 to 4 Amperes for 4 to 8 hours.

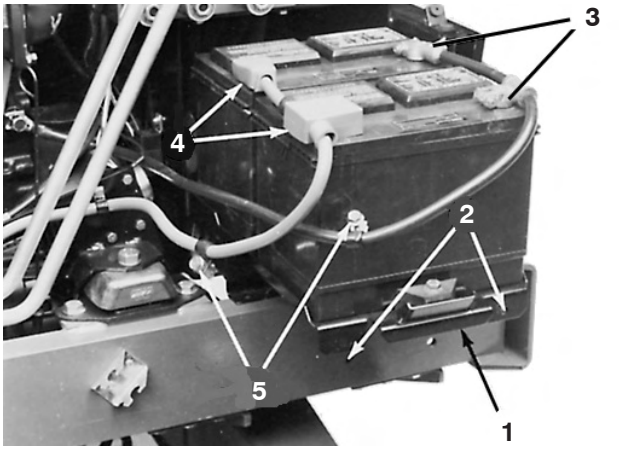

Figure 2

1. Battery tray
2. Tray mounting holes
3. Negative (–) connections
4. Positive (+) connections
5. Battery tray mounting screws

Warning

Charging the battery produces gasses that can explode.

Never smoke near the battery and keep sparks and flames away from the battery. Charge batteries in a open well ventilated area.

5. When batteries are fully charged, disconnect charger from electrical outlet and battery posts.
6. Install negative (–) cable ends, slide tray back in place, secure with capscrews and install side panel.

Before Operating

Checking the Engine Oil

The engine is shipped with 8.5 qt. (8 l) of oil in the crankcase. However, check level of oil before and after the engine is first started.

The engine uses any high quality detergent oil having the American Petroleum Institute (API) “service classification” CH–4, CI–4 or higher.
Use the following chart to select the appropriate oil viscosity according to the ambient temperature. Recommended oil viscosity is SAE 15W–40 for all seasons.

Ambient Temperature	Oil Viscosity
23° to 104° F (–5° to 40° C)	SAE 30
41° to 122° F (5° to 50° C)	SAE 40
5° to 122° F (–15° to 50° C)	SAE 15W–40
–13 to 104° F (–25° to 40° C)	SAE 10W–30
–22° to 68° F (–30° to 20° C)	SAE 5W–20

Toro Premium Engine oil is available from your distributor in either 15W–40 or 10W–30 viscosity. See the parts catalog for part numbers.

Important After the engine is operated, the oil drains back to the oil pan very slowly. Before checking the oil level, allow adequate time for the oil to drain back to the pan so an accurate measurement can be attained.

1. Be sure machine is positioned on a level surface.
2. Unlatch hood and raise and prop it open (Fig. 3). Make sure hood prop is secured in one of the mounting brackets on hood. Unlatch and remove the left side panel.

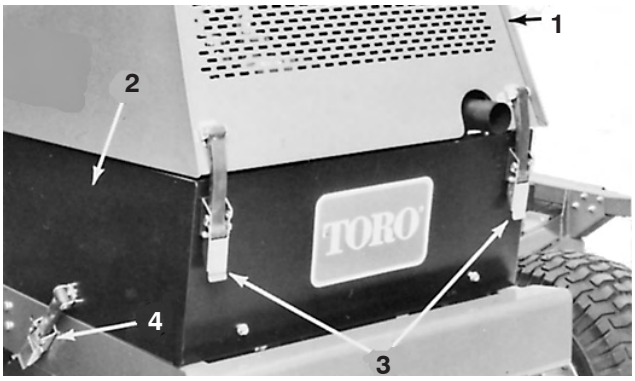

Figure 4

1. Engine hood
2. Left side panel
3. Hood latches
4. Side panel latch

3. Remove dipstick (Fig. 5), wipe with a clean rag, and insert into tube until fully seated. Remove dipstick from tube and check oil level. If oil level is low, remove filler cap (Fig. 6). Add proper type of oil until level is between the upper and lower holes on the dipstick (Fig. 7). **Do not overfill**.



Figure 5

1. Dipstick

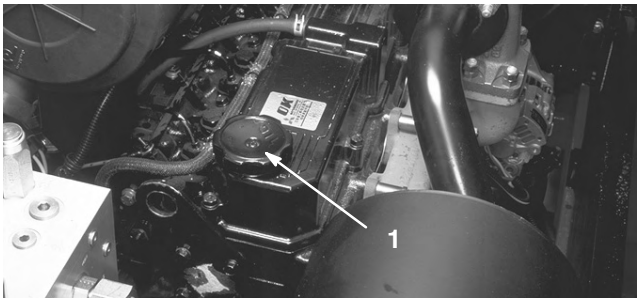

Figure 6

1. Engine oil fill cap

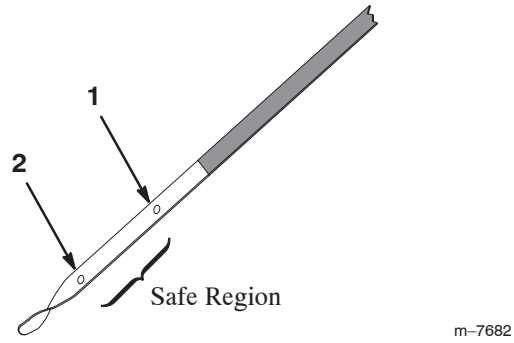

Figure 7

1. Upper hole
2. Lower hole

Important Check oil after every 5 hours operation or daily. Change oil and filter after the first 50 hours, then change both every 250 hours operation thereafter. Change oil and filter more frequently when engine is operated in extremely dusty or dirty conditions.

4. Insert dipstick into tube and close and latch hood.

Checking the Cooling System

The cooling system is filled with a 50/50 solution of water and permanent ethylene glycol anti-freeze. Check coolant level at beginning of each day before starting the engine. Capacity of cooling system is approximately 3.9 gal. (14.7 l).

Caution

If the engine has been running, the pressurized, hot coolant can escape and cause burns.

- **Do not open the radiator cap when the engine is running.**
- **Use a rag when opening the radiator cap, and open the cap slowly to allow steam to escape.**

1. Unlatch, raise and prop hood open. Make sure hood prop is secured in one of the mounting brackets on hood.
2. Check level of coolant in expansion tank (Fig. 8). The expansion tank must be filled to the FULL mark.

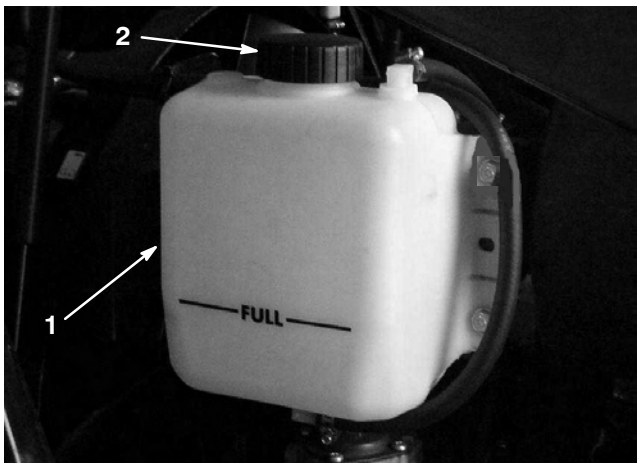

Figure 8

1. Expansion tank
2. Expansion tank cap

3. If coolant level is low, add a 50/50 solution of water and permanent ethylene glycol anti-freeze. **Do not use alcohol/methanol base coolants or water only. Do not overfill.**
4. Remove expansion tank cap and fill expansion tank to the FULL mark.
5. If adding large quantities of solution, remove radiator cap (Fig. 9) and fill radiator until level of coolant is above the radiator core and about 1 in. (25 mm) below bottom of filler neck.

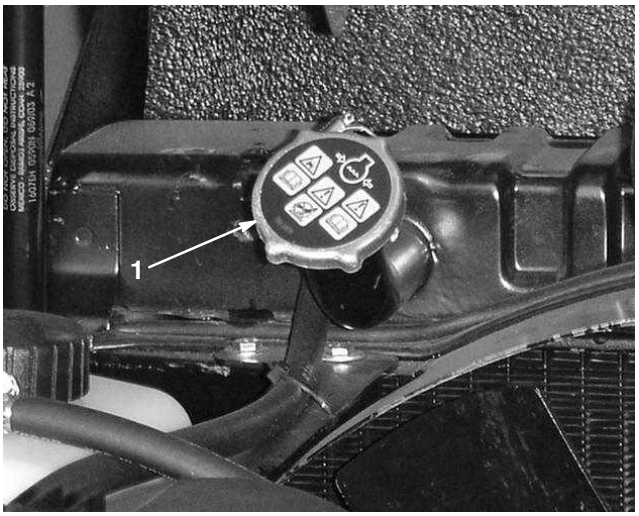

Figure 9

1. Radiator cap

6. Install radiator cap and expansion tank cap.
7. Close and latch the hood.

Checking the Hydraulic System Fluid

1. Fluid level should be checked daily through sight glass at rear of hydraulic reservoir (Fig. 10). When oil is cold, level will be slightly below center, but should be in the middle of the sight glass when the oil is warm.

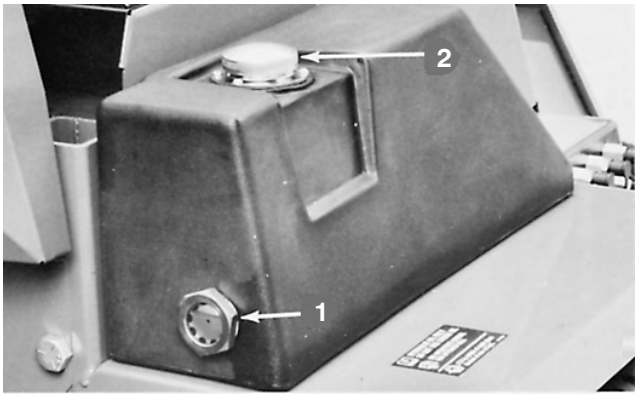

Figure 10

1. Hydraulic oil level sight glass
2. Reservoir fill cap

2. If oil level is low, add hydraulic oil to the reservoir (Fig. 10); refer to Servicing the Hydraulic System, page 45.

Filling the Fuel Tank

Use only clean, fresh diesel fuel or biodiesel fuels with low (<500 ppm) or ultra low (<15 ppm) sulfur content. The minimum cetane rating should be 40. Purchase fuel in quantities that can be used within 180 days to ensure fuel freshness.

Fuel tank capacity: 28 U.S. gallons (108 l)

Use summer grade diesel fuel (No. 2–D) at temperatures above 20 degrees F (–7 degrees C) and winter grade (No. 1–D or No. 1–D/2–D blend) below that temperature. Use of winter grade fuel at lower temperatures provides lower flash point and cold flow characteristics which will ease starting and reduce fuel filter plugging.

Use of summer grade fuel above 20 degrees F (–7 degrees C) will contribute toward longer fuel pump life and increased power compared to winter grade fuel.

Danger

Under certain conditions, diesel fuel and fuel vapors are highly flammable and explosive. A fire or explosion from fuel can burn you and others and can cause property damage.

- **Use a funnel and fill the fuel tank outdoors, in an open area, when the engine is off and is cold. Wipe up any fuel that spills.**
- **Do not fill the fuel tank completely full. Add fuel to the fuel tank until the level is 1 in. (25 mm) below the bottom of the filler neck. This empty space in the tank allows the fuel to expand.**
- **Never smoke when handling fuel, and stay away from an open flame or where fuel fumes may be ignited by a spark.**
- **Store fuel in a clean, safety-approved container and keep the cap in place.**

Biodiesel Ready

This machine can also use a biodiesel blended fuel of up to B20 (20% biodiesel, 80% petrodiesel). The petrodiesel portion should be low or ultra low sulfur. Observe the following precautions:

- The biodiesel portion of the fuel must meet specification ASTM D6751 or EN14214.
- The blended fuel composition should meet ASTM D975 or EN590.
- Painted surfaces may be damaged by biodiesel blends.
- Use B5 (biodiesel content of 5%) or lesser blends in cold weather
- Monitor seals, hoses, gaskets in contact with fuel as they may be degraded over time.
- Fuel filter plugging may be expected for a time after converting to biodiesel blends.
- Contact your distributor if you wish for more information on biodiesel

1. Remove fuel tank cap (Fig. 11).
2. Fill tank to about 1 in. (25 mm) below bottom of filler neck with No. 2 diesel fuel. Install cap.

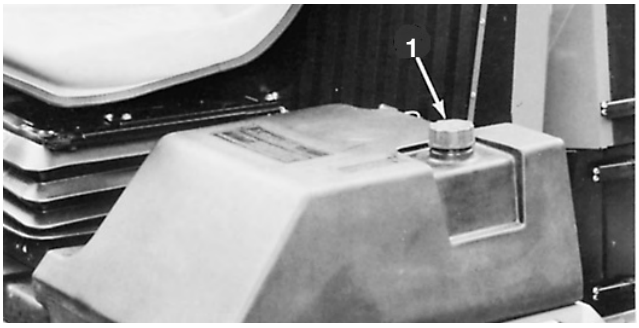

Figure 11

1. Fuel tank cap

Checking the Tire Pressure

Since the machine can be operated under many different types of turf conditions, proper tire pressure is very important. Use the following as a guide:

Traction Unit Tires

- Under **Normal** mowing conditions and when used on a wide variety of turf grasses: 15 psi (100 kPa) front; 13 psi (90 kPa) rear.
- When turf is **wet** and softer than normal, use low pressure: 12 psi (80 kPa) front and 9 psi (60 kPa) rear.
- When turf is **dry** and harder than normal, use higher tire pressure: 18 psi (120 kPa) front and rear.

Castor Wheel Tires

- All conditions use 50 psi (340 kPa) castors.

Checking Systems Operation

Start engine. Move the machine, slowly, to an area where the machine can be checked for proper function. Check operation of controls, safety interlock system, engine, hydraulic system, brakes and cutting units; refer to Operation, page 23, for proper procedures.

Checking Cutting Unit Mismatch

To ensure all cutting units are at the same height-of-cut:

1. Adjust all cutting units to the highest height–of–cut. Position all castor arm height-of-cut spacers to on the underside of the castor arms. Do not move washers. Leave them in their original position.

Note: Unless all castor wheel axles are not in the same location, axles do not have to be relocated. All, however must be in the same holes (Fig. 12).

2. Place a flat 4'x8' sheet of 3/4 in. plywood on a level surface and lower a cutting unit onto the plywood.

3. Taking each cutting blade in turn, position blade so it faces fore and aft. Measure from plywood to front tip of cutter blade and record dimension. All blade heights on same deck should be within 1/4 in. (6.3 mm) of one another. If blade heights meet criteria, proceed to step 5. If blade heights are not within 1/4 in. (6.3 mm), proceed to step 4.

4. To match cutting blade height, transfer washers from one side of a castor wheel arm to the other. If end is to be lowered, transfer one or both washers from the underside to the top. By contrast, if end is to be raised, transfer washer(s) from the top to the underside. Each washer is 1/8 in. (3 mm) thick. Repeat measurement of blade tip height and record new dimensions.

5. Repeat steps 2–3 on remaining cutting units, and step 4, if necessary. If washers are transferred on a outboard cutting unit castor arm, be sure to transfer the same number on both ends of the castor arm.

6. Compare blade height dimensions of all cutting units. Blade heights must be within 3/8 in. (9.5 mm) of one another. If they are not, determine which cutting unit height can be changed to compensate for difference and either transfer washers from bottom to top to lower unit, or from top to bottom to raise. Transfer an equal number of washers at all castor wheel locations to keep cutting unit level—two on front unit, four on outboard units.

Adjusting the Height of Cut

The height-of-cut is adjustable from 1 to 5-1/2 in. (25 to 140 mm) in 1/2 in. (13 mm) increments. Positioning the castor wheel axles in the top holes of the castor forks (Fig. 12) allows Low range height-of-cut settings from 1 to 4 in. (25 to 102 mm); positioning the castor wheel axles in the lower holes of the castor forks (Fig. 12) allows High range height-of-cut settings from 2-1/2 to 5-1/2 in. (63.5 to 140 mm).

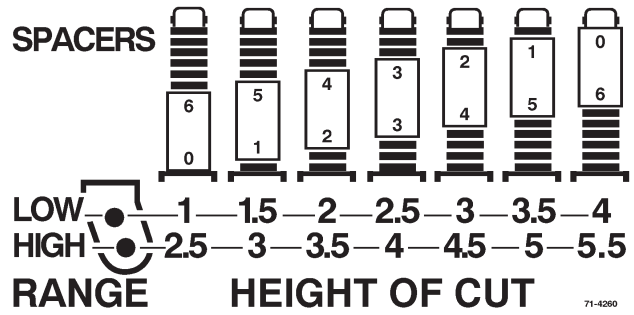

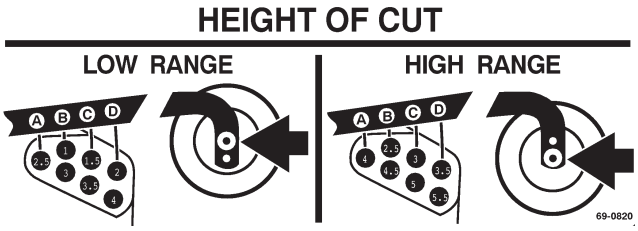

Figure 12

1. Start engine, position the machine on a level surface, lower cutting units to a point where castor wheels can be removed from arms, set lift levers in neutral, set parking brake and shut engine off. Remove ignition key to prevent accidental startup.

2. Position castor wheel axles on all cutting units in the same hole in the castor forks.

3. On the front cutting unit, remove the hairpin cotter and clevis pins from the rear castor pivot arms (Fig. 13). Align the pivot arm holes with selected height–of–cut bracket holes in the deck frames, insert clevis pins and install the hairpin cotters (Fig. 13).

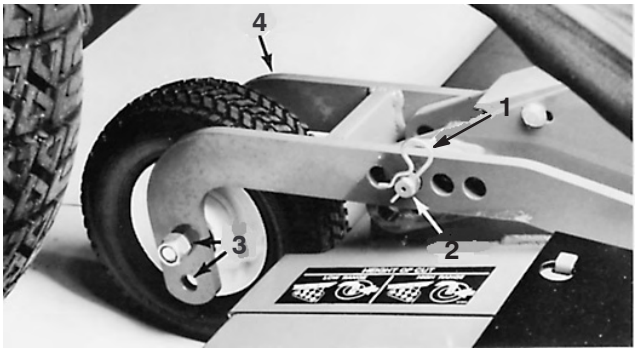

Figure 13

1. Hairpin cotter
2. Clevis pin
3. Castor axle mount holes
4. Pivot arm

4. On all remaining castor wheel assemblies, remove lynch pin from castor fork shafts (Fig. 14). Remove castor fork shaft and spacer assembly from the castor arm (Fig. 14). Place spacers onto castor spindle to desired height-of-cut setting and install castor fork shaft in arm (Fig. 9). Install remaining spacers onto shaft and secure assemblies with the lynch pin (Fig. 14).

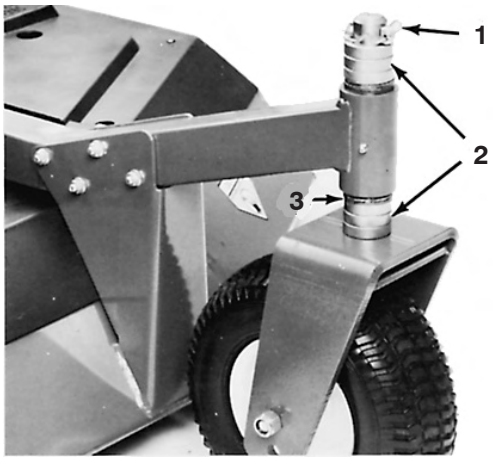

Figure 14

1. Lynch pin
2. Spacers
3. Washers

Adjusting the Skids

After initial set up or if height-of-cut is changed, deck skids should also be adjusted. Adjust skids by loosening flange lock nuts (Fig. 15), positioning skid at specified height (see chart) and re-tightening flange lock nuts.

Front Cutting Unit

All H.O.C.—3/8 to 1/2 in. above level surface

Outboard Cutting Units

1 in. H.O.C.—Skid positioned all the way up

1-1/2 to 3 in. H.O.C.—Skid positioned 1/2 to 1 in. above level surface

3 in. and above H.O.C.—Skid positioned all the way down

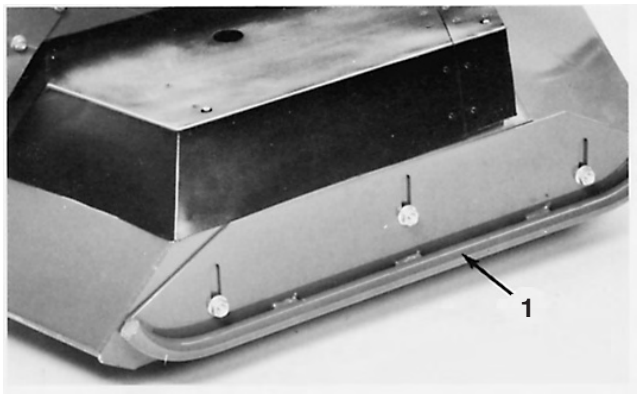

Figure 15

1. Skid

Operation

Note: Determine the left and right sides of the machine from the normal operating position.

Controls

Seat

Seat adjusting lever (Fig. 16) Adjusts the seat fore or aft.

Weight Adjusting Lever (Fig. 16) Adjusts seat for operator's weight.

Weight Adjusting Gauge (Fig. 16) Indicates when seat is adjusted properly for operator's weight.

Arm Rest Adjusting Knob (Fig. 16) Adjusts arm rest angle.

Back Adjusting Lever (Fig. 16) Adjusts seat back angle.



Figure 16

1. Seat adjusting lever
2. Weight adjusting lever
3. Weight indicator gauge
4. Arm rest knob
5. Back tilt lever

Warning Light Check Switch

Before beginning operation, press the warning light switch button (Fig. 17). All lights on control panel should light. If a light fails to illuminate, there is an electrical malfunction requiring immediate repair.

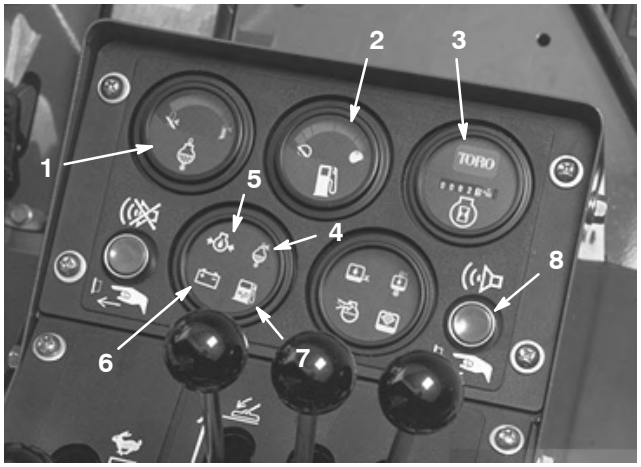

Figure 17

1. Coolant temperature gauge
2. Fuel gauge
3. Hour meter
4. Coolant temperature warning
5. Engine oil pressure warning
6. No charge warning
7. Fuel system warning
8. Warning light check switch

Engine Oil Pressure Warning

Dangerously low engine oil pressure is indicated by both a warning indicator light (Fig. 17) and audible signal. When this occurs, stop the engine immediately to keep possible engine damage minimal.

No Charge Warning

No charge to the batteries is indicated by a warning indicator light (Fig. 17) and audible signal.

Fuel System Warning

A warning indicator light (Fig. 17) and audible signal warn of water in the fuel and need for service.

Coolant Temperature Warning

If engine coolant temperature exceeds 215° F (101.7° C), a warning indicator light illuminates (Fig. 17) and audible signal sounds. If coolant temperature exceeds 230° F (110° C), the engine automatically shuts down. Switch resets automatically when system and engine cools down.

Hour Meter

The hour meter (Fig. 17) registers accumulated hours of engine operation. Useful for determining intervals for service maintenance and lubrication.

Coolant Temperature Gauge

The coolant temperature gauge (Fig. 17) indicates temperature of system coolant.

Fuel Gauge

The fuel gauge (Fig. 17) indicates quantity of fuel in fuel tank.

Hydraulic Oil Temperature Warning

A warning indicator light (Fig. 18) and audible signal warn of excessively high hydraulic oil temperature.



Figure 18

1. Hydraulic oil level warning
2. Hydraulic oil temperature warning
3. Hydraulic oil filter warning
4. Air cleaner warning
5. Alarm silence button

Hydraulic Oil Filter Warning

A warning indicator light (Fig. 18) and audible signal warn the filter is clogged and in need of service.

Hydraulic Oil Level Warning

A warning indicator light (Fig. 18) and audible signal warn of low hydraulic oil level. If oil level drops further, the engine will automatically be stopped. Engine cannot be restarted until oil supply is brought to a safe level.

Air Cleaner Warning

A warning indicator light (Fig. 18) and audible signal warn of a clogged air cleaner requiring service. These warnings alert that the engine has been operated in excess of when normal filter maintenance should have occurred.

Alarm Silence Button

Pressing button (Fig. 18) silences alarm. Alarm system will disengage and automatically reset when problem is corrected.

Parking Brake Indicator

The parking brake indicator, on the steering column (Fig. 19), alerts operator the parking brake is on.

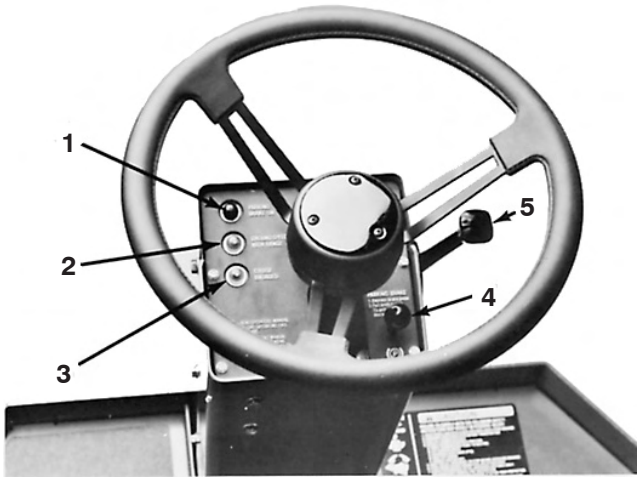

Figure 19

1. Parking brake indicator
2. High range speed mode indicator
3. Cruise control engaged indicator
4. Parking brake knob
5. Tilt steering control lever

High Range Ground Speed Indicator

The high range ground speed indicator (Fig. 19), on steering column, alerts operator that the machine is in high range ground speed mode.

Cruise Control Indicator

The cruise control indictor, on steering column (Fig. 19), alerts operator the cruise control is engaged.

Tilt Steering Control

The tilt steering control is a single lever on right side of steering column (Fig. 19). Pivot lever rearward to release and move steering column and tower to desired angle. Pivot lever forward to lock steering column and wheel in desired position.

Key Switch

The key switch (Fig. 20) has three positions: OFF, ON, and START. Rotate key to START and release when engine begins running. To stop, rotate key to OFF position.

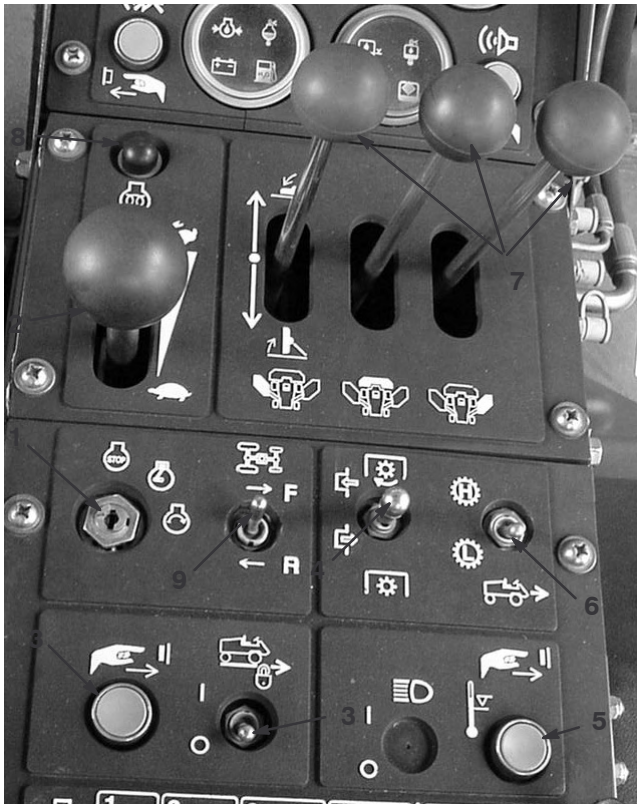

Figure 20

1. Key switch
2. Throttle control
3. Cruise control switches
4. Deck drive/PTO switch
5. Engine override switch
6. High range/Low range ground speed switch
7. Cutting unit lift controls
8. Glow plug indicator light
9. Four wheel drive switch

Throttle Control

The throttle control (Fig. 20) is used to operate engine at various speeds. Moving throttle forward increases engine speed—FAST; rearward decreases engine speed—SLOW.

Cruise Control Switches

There are two cruise control switches on panel to right of operator (Fig. 20)—one for ON/OFF control, the other for cruise engagement. Cruise control operation, when in either high range or low range mode, is disengaged either by actuating the brake pedal or turning the switch to OFF position.

High Range/Low Range Ground Speed Switch

This single lever (Fig. 20) allows selection of either high or low range ground speeds. Push switch forward for High Range or pull back for Low Range. Switch returns to center position. Switch automatically resets to Low Range when a cutting unit is lowered, front cutting unit is not fully raised or if engine is shut off.

Note: On model 30582 the switch has two positions and on model 30583 the switch has three positions.

Cutting Unit Lift Controls

The two outside levers raise and lower the outside cutting units, the center lever raises and lowers the front unit (Fig. 20). Engine must be running to lower and raise cutting units. Cutting unit blades automatically stop whenever the cutting units are raised. When lowering outside cutting units, keep control levers actuated until cutting units pass over center. Units will then “float” down to the turf.

Note: Holding the cutting unit levers in the actuated position while the units are lowering could drive them forcefully into the turf and cause cutting unit damage. After lowering mowers, do not allow levers to snap back to neutral. This could cause the levers to go past neutral, lock the cutting units in a non-float mode and prevent them from following turf contours.

Glow Plug Indicator

The glow plug indicator (Fig. 20) automatically actuates proper glow period when ignition key is turned to ON position. It illuminates when glow plugs are actuated. When glow plugs are heated sufficiently, light goes off indicating engine is ready to start.

Deck Drive/PTO Switch

Pull sleeve upward on switch lever (Fig. 20) and push lever to ENGAGE position and release to actuate switch; lever will move to neutral position when released. Move lever to DISENGAGE position to stop. Switch automatically resets to DISENGAGE when all three cutting units are raised or engine is shut off.

Four Wheel Drive Switch
(Model 30583 only)

Toggle the switch (Fig. 20) in the on or forward position to engage the four wheel drive in forward. Toggle the switch in the momentary or reverse position will engage the four wheel drive in reverse.

Engine Override Switch

If engine has overheated and been shut–down by the safety switch, depressing button (Fig. 20 and 21) will allow engine operation. Use button only for emergencies and only at short intervals.



Figure 21

1. Engine override switch

Electrical System—Fuse Blocks

The electrical system is protected by fuses which are located under the control panel to the operator's right (Fig. 22). Fusible links are also incorporated into the wire harness for the protection of the entire wiring circuit. The links can be replaced if total loss of electrical function results. However, the reason for the malfunction should first be found and corrected.

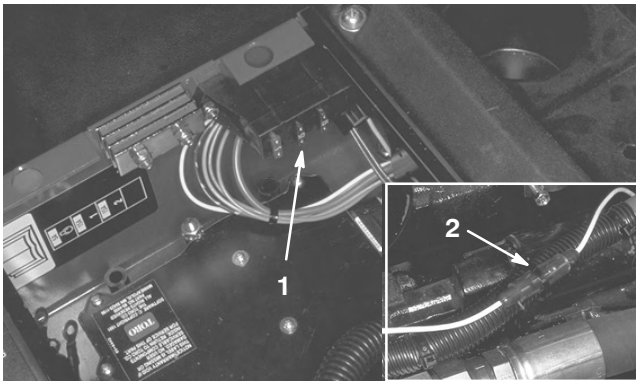

Figure 22

1. Fuse block (2)
2. Fusible link

Traction Pedal

The traction pedal (Fig. 23) controls forward and reverse operation. Depress top of pedal to move forward and bottom to move in reverse. Ground speed is dependent upon high range/low range ground speed mode(slower in low than high range) and proportionate to how far pedal is depressed.

Steering/Parking Brake Pedals

The left and right turn pedals are connected to the front wheel brakes (Fig. 23). Since both brakes work independently, they can be used to turn machine more sharply or to increase traction if one wheel tends to slip while operating on a hillside. However, wet grass or soft turf can be damaged when brakes are used for turning. A brake latch lever locks the two pedals together for parking. Whenever the engine is shut off, set parking brake to prevent accidental machine movement. Latch pedals together, depress them and pull the parking brake knob at the top of the steering tower up (Fig. 19) Depress brake pedals to release the parking brake.

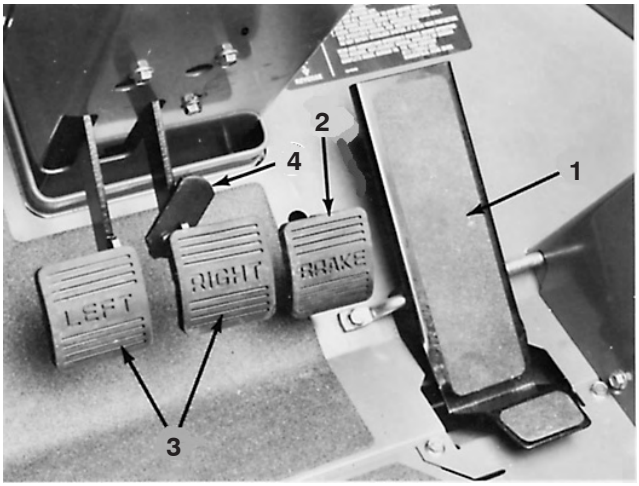

Figure 23

1. Traction pedal
2. Brake pedal
3. Steering/Parking brake pedals
4. Brake latch lever

Brake Pedal

Single pedal (Fig. 23) operated by the right foot actuates fully enclosed, multiple disc front brakes.

Note: There is dynamic braking through the closed-loop hydrostatic traction drive system.

Storage

A large removable tool storage tray is located under a hinged floor plate (Fig. 24). A small storage and beverage holder is to the operator's right.

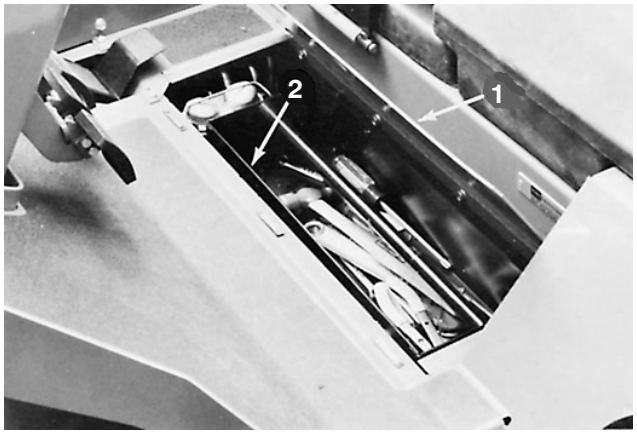

Figure 24

1. Hinged floor plate
2. Removable tool tray

Important The fuel system must be bled if any of the following have occurred:

- Initial start-up of a new machine.
- Engine has ceased running due to lack of fuel.
- Maintenance has been performed upon fuel system components; i.e., filter replaced, separator serviced, etc.

Refer to Bleeding Fuel System.

Starting and Stopping the Engine

1. Sit on seat, keep foot off traction pedal. Ensure parking brake is engaged. Set seat and tilt steering wheel and tower to comfortable position before starting engine.
2. Turn ignition switch to ON position. When glow plug indicator light goes off, engine is ready to START.

Important Do not use starting fluid.

3. Rotate ignition key switch to START position (Fig. 25). Release key immediately when engine starts and allow it to return to RUN position.

Note: Do not run starter motor more than 10 seconds at a time or premature starter failure may result. If engine fails to start after 10 seconds, turn key to OFF position. Recheck controls and procedures, wait 10 additional seconds and repeat starting operation.

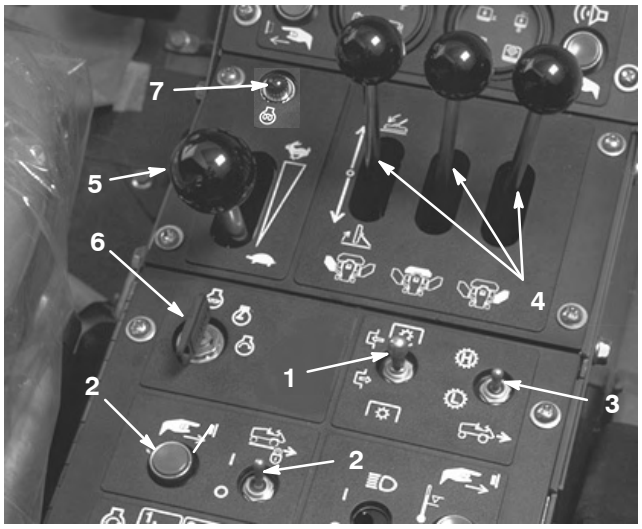

Figure 25

1. PTO Switch
2. Cruise control switches
3. High/Low range switch
4. Cutting unit lift controls
5. Throttle lever
6. Ignition key switch
7. Glow plug indicator light

4. When engine is first started, or after overhaul of the engine, hydrostatic transmission, steering or wheel drive, operate machine in forward and reverse for one to two minutes. Turn steering wheel left and right to check steering response and operate the lift levers to check for proper operation. Then, shut engine off, set parking brake and check for oil leaks, loose parts or other malfunctions.

Caution

Shut engine off and wait for all moving parts to stop before checking for oil leaks, loose parts, or other difficulties.

5. Before stopping engine, move HIGH/LOW RANGE ground speed switch to LOW, disengage PTO and cruise control switches and move lift levers and traction pedal to neutral. Move throttle control to SLOW position. Set parking brake and turn ignition key to OFF position.

Important Allow the engine to idle for 5 minutes before shutting if off after a full load operation. Failure to do so may lead to turbo–charger failure.

Draining Water from the Fuel Filter

Any water accumulation should be drained from the fuel filter before each use.

1. Position the machine on a level surface and stop the engine.
2. Place a drain pan under the fuel filter.
3. Open the drain plug on the fuel filter approximately one turn and drain any accumulated water (Fig. 26). Tighten the plug after draining.

Note: Because the accumulated water will be mixed with diesel fuel, drain the fuel filter into a suitable container and dispose of it properly.

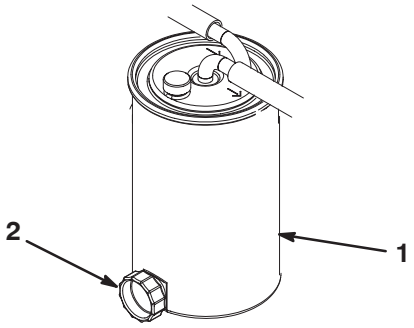

Figure 26

1. Fuel filter
2. Drain plug

Bleeding the Fuel System

1. Position the machine on a level surface. Make sure the fuel tank is at least half full.
2. Open the breather valve, on top of the canister, until fuel leaks out (Fig. 27).

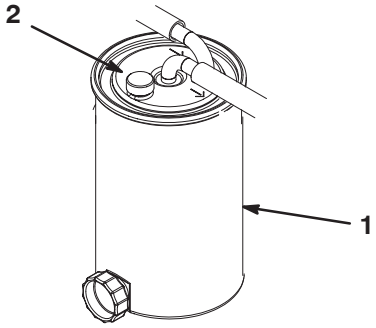

Figure 27

1. Fuel filter
2. Breather valve

3. Close the breather valve.
4. Crank the engine for 5 seconds then pause. Repeat the procedure until the engine starts and runs smoothly.

Bleeding the Fuel System

1. Unlatch, raise and prop engine hood open and remove left side panel (Fig. 28).



Figure 28

1. Engine hood
2. Left side panel
3. Hood latches
4. Side panel latch

2. Rotate the priming pump (Fig. 29) counterclockwise until spring in pump assembly releases. Operate pump up and down until a solid stream of fuel flows out around filter plug and tighten plug.

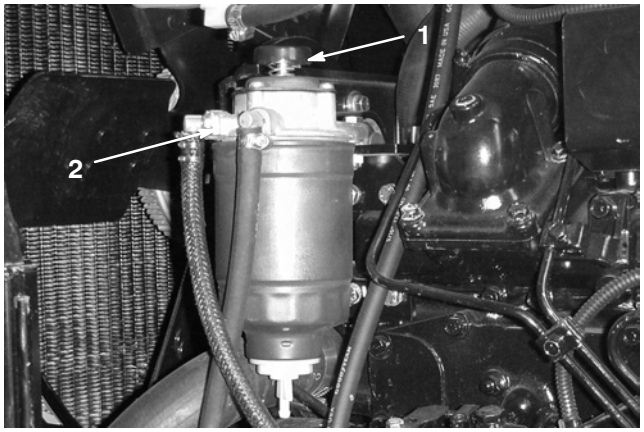

Figure 29

1. Priming pump
2. Air bleed plug

3. Loosen the air vent plug on the fuel filter/water separator about 1-1/2 turns (Fig. 29). Operate priming pump until solid stream of fuel flows from the vent hole (Fig. 29), then tighten air vent plug.
4. Push priming pump down to compress spring and rotate clockwise to lock closed.

5. Try to start engine. If engine starts, install left side panel, lower hood and resume operation. If engine does not start, repeat steps 2–5.

Diagnostic Light

The machine is equipped with a diagnostic light which indicates if the electronic controller is functioning correctly. The green diagnostic light is located under the control panel (Fig. 30). When the electronic controller is functioning correctly and the key switch is moved to the ON position, the controller diagnostic light will be illuminated. The light will blink if the controller detects a malfunction in the electrical system. The light will stop blinking and automatically reset when the key switch is turned to the OFF position.

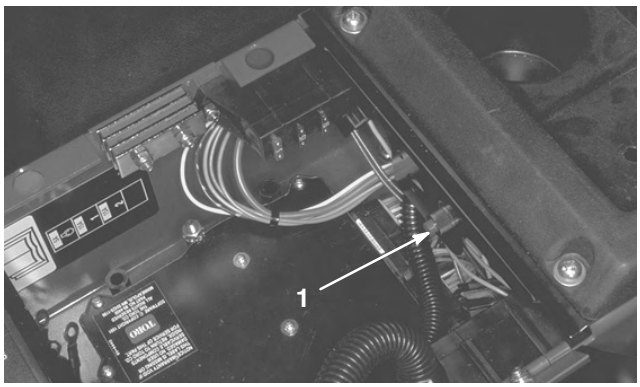

Figure 30

1. Electronic controller light

When the controller diagnostic light blinks, one of the following outputs has been detected in the controller:

- One of the outputs has been shorted.
- One of the outputs is open circuited.

Using the diagnostic display, determine which output is malfunctioning; refer to Checking the Interlock Switches, page 29.

If the diagnostic light is not illuminated when the key switch is in the ON position, this indicates that the electronic controller is not operating. Possible causes are:

- Loopback is not connected.
- Fuses are blown.
- The light is burned out.
- Not functioning correctly.
- Fusible links are blown.

Check electrical connections, input fuses and diagnostic light bulb to determine malfunction. Make sure loopback connector is secured to wire harness connector.

Note: If the diagnostic light flashes during normal operation of the machine, do not turn off the machine, toggle to the output and touch any switch. The LED will flash indicating the source of the failure.

Diagnostic ACE Display

The machine is equipped with an electronic controller which controls most machine functions. The controller determines what function is required for various input switches (i.e. seat switch, key switch, etc.) and turns on the outputs to actuate solenoids or relays for the requested machine function.

For the electronic controller to control the machine as desired, each of the input switches, output solenoids and relays must be connected and functioning properly.

The Diagnostic ACE and overlay are tools to help the user verify correct electrical functions of the machine. If you do not have a Diagnostic ACE , contact your Authorized Toro Distributor.

Checking the Interlock Switches

Caution

If safety interlock switches are disconnected or damaged the machine could operate unexpectedly, causing personal injury.

- **Do not tamper with the interlock switches.**
- **Check the operation of the interlock switches daily and replace any damaged switches before operating the machine.**

The purpose of the interlock switches are to prevent the engine from cranking or starting unless the traction pedal is in NEUTRAL, to ensure cutting units disengage when raised or when operator leaves the seat. In addition, the engine will stop when the traction pedal is depressed with operator off the seat.

Verifying Interlock Switch Function

1. Park machine on a level surface, lower the cutting units, stop the engine and engage the parking brake.

2. Open control panel cover. Locate wire harness and connectors near controller. Carefully unplug loop back connector from harness connector (Fig. 31).

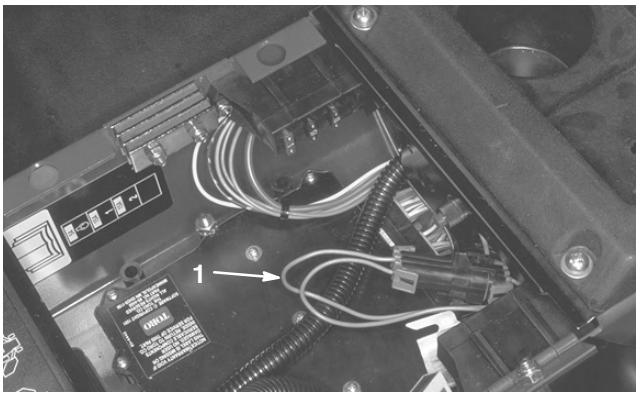

Figure 31

1. Wire harness and connectors

3. Connect the Diagnostic ACE display connector (Fig. 32) to the harness connector. Make sure correct overlay decal is positioned on Diagnostic ACE display.

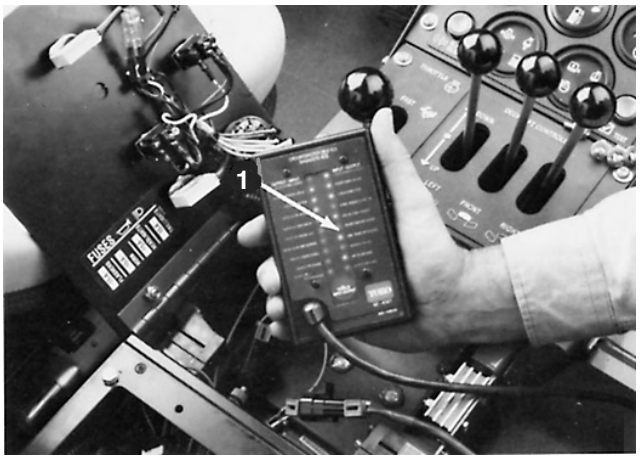

Figure 32

1. Diagnostic ACE

4. Turn the key switch to the ON position, but do not start machine.

Note: The red text on the overlay decal refers to input switches and the green text refers to outputs.

5. The "inputs displayed" LED, on lower right column of the Diagnostic ACE, should be illuminated. If "outputs displayed" LED is illuminated, press the toggle button, on Diagnostic ACE, to change LED to "inputs displayed".

6. The Diagnostic ACE will illuminate the LED associated with each of the inputs when that input switch is closed. Individually, change each of the switches from open to closed (i.e., sit on seat, engage traction pedal, etc.), and note that the appropriate LED on Diagnostic ACE will blink on and off when corresponding switch is closed and opened. Repeat on each switch that it is possible to be changed by hand.

7. If switch is closed and appropriate LED does not blink on and off, check all wiring and connections to switch and/or check switches with an ohm meter. Replace any defective switches and repair any defective wiring.

8. Now start engine and raise and lower each cutting unit. Note the appropriate LED on the Diagnostic ACE (i.e. LED is illuminated when cutting unit is lowered and LED is not illuminated when cutting unit is raised).

The Diagnostic ACE also has the ability to detect which output solenoids or relays are turned on. This is a quick way to determine if a machine malfunction is electrical or hydraulic.

Verifying Output Function

1. Park machine on a level surface, lower the cutting units, stop the engine and engage the parking brake.

2. Open control panel cover. Locate wire harness and connectors near controller. Carefully unplug loopback connector from harness connector.

3. Connect the Diagnostic ACE connector to the harness connector. Make sure correct overlay decal is positioned on Diagnostic ACE.

4. Turn the key switch to the ON position, but do not start machine.

Note: The red text on the overlay decal refers to input switches and the green text refers to outputs.

5. The "outputs displayed" LED, on lower right column of Diagnostic ACE, should be illuminated. If "inputs displayed" LED is illuminated, press the toggle button, on Diagnostic ACE, to change LED to "outputs displayed".

Note: It may be necessary to toggle between "inputs displayed" and "outputs displayed" several times to do the following step. To toggle back and forth, press toggle button once. This may be done as often as required. **Do not hold the button.**

6. Sit on the seat and attempt to operate the desired function of the machine. (If you need help verifying the correct input settings for each function, refer to the Logic Chart on page 32) The appropriate output LED's should illuminate to indicate that the ECU is turning on that function. (Refer to the logic chart to be certain of the specified output LED's).

Note: If any output LED is blinking, this indicates an electrical problem with that OUTPUT. Repair / replace defective electrical parts immediately. To reset a blinking LED, turn the key switch “OFF”, then back “ON”.

If no output LED’s are blinking, but the correct output LED’s do not illuminate, verify that all the input switches work by following the instructions on how to verify interlock switches. Verify correct switch function.

If the output LED’s are on as specified, but the machine does not function properly, this indicates a non–electrical problem. Repair as necessary.

Note: Due to electrical system constraints, the output LED’s for “START”, “MONITOR” and “ETR/ALT” may not blink even though an electrical problem may exist for those functions. If the machine problem appears to be with one of these functions, be certain to check the electrical circuit with a volt / ohm meter to verify that no electrical problem exists to these functions.

If electronic controller experiences an output failure for either the cruise control or one of the cutting units, the controller will disable the machine function.

Indications that this is the cause of the problem include:

- Flashing green diagnostic light
- Diagnostic ACE will illuminate the “output fail” LED.
- Diagnostic ACE will flash which output failed.
- Machine will not respond to ignition key inputs.

The above indicates an ECU problem, contact your local Authorized Toro Distributor for assistance.

If each output switch is in the correct position and functioning correctly, but the output LED’s are not correctly illuminated, this indicates an ECU problem. If this occurs, contact your Toro Distributor for assistance.

Important The Diagnostic ACE display should not be left connected to the machine. It is not designed to withstand the environment of the machine’s every day use. When done using Diagnostic ACE, disconnect it from the machine and reconnect loopback connector to harness connector. Machine will not operate without loopback connector installed on harness. Store Diagnostic ACE in dry, secure location in shop, **not on machine.**

LOGIC GRID

KEY: X=CLOSED, O=OPEN, P=OUTPUT ON,
M=MOMENTARILY CLOSED,
B= MUST BE CLOSED ONLY IF HI TEMP SWITCH IS CLOSED.

ACTIONS	INPUTS: 0 Hi Range Disengage	1 Parking Brake (X=OFF)	2 Key Run	3 Traction Neutral	4 Seat Switch	5 High Coolant Temp	6 High Temp Override	7 Cruise Control Enable	8 PTO Engage	9 PTO Disengage	10 Front Deck Down	11 Right Deck Down	12 Left Deck Down	13 Hi Range Engage	14 Hyd. Oil Level (x=ok)	15 Cruise Control Engage	16 Service Brake (x=off)	17	AØ Start Key	OUTPUTS: 0	1	2 Right Deck Engage	3 Left Deck Engage	4 Gauge Power ON	5 Front Deck Engage	6 Cruise Control Clutch	7 ETR Hold / Alt	8	9 Output Fail	10 Harness	11	12 Start	13 Hi Range Engage
1) Start				X					O										X							P					P	
2) Hi Range Engage			X								O	O	O	M																		P
3) Run (no operator)			X	X		O	B								X											P						
Run (with operator)			X	O	X	O	B								X											P						
4) Cruise Engage			X		X			X								M	X								P							
5) Front Deck Engage	O		X		X	O			M	O	X			O										P								
6) Right Deck Engage	O		X		X	O			M	O		X		O							P											
7) Left Deck Engage	O		X		X	O			M	O			X	O								P										
8) Gauges ON			X																				P								

Checking the Warning Indicator Lights

Each day, before operating assure all warning lights are functioning:

1. Sit on seat and apply parking brake. Turn ignition key ON and push TEST button. All lights should illuminate.
2. If a light fails to illuminate, replace the bulb and test again.

Pushing or Towing the Machine

In an emergency, the machine can be moved by the following methods:

- Actuate the bypass valve in the variable displacement hydraulic pump and push or tow the machine.
- Unlock the front hubs and tow the machine (Model 30582 only).

Danger

There is no effective braking on the machine when the wheel hubs are disengaged. Unless it is on a level surface or the wheels are blocked, the machine will move freely.

Do not unlock the wheel hubs without either blocking the wheels or connecting the machine to a towing vehicle by means of a rigid towing device.

Pump Bypass Method

Use this method for short distances only.

Important Do not push or tow the machine faster than 2–3 mph (3–4.8 km/hr) because internal transmission damage may occur. The bypass valve must be open whenever the machine is pushed or towed by this method. We do not recommend that this process be used as standard procedure.

1. Bypass valve is located in left side of variable displacement pump (Fig. 33). Rotate the valve 1/2 to 1 turn counterclockwise to open and allow oil to by–pass internally. Because fluid is bypassed, the machine can be **slowly** moved without damaging the transmission.
2. Rotate the valve clockwise until it is securely seated before starting the engine. However, do not exceed 5–8 ft.-lb. (7–11 N m) torque to close the valve.

Important Running the engine with the bypass valve open will cause the transmission to overheat.

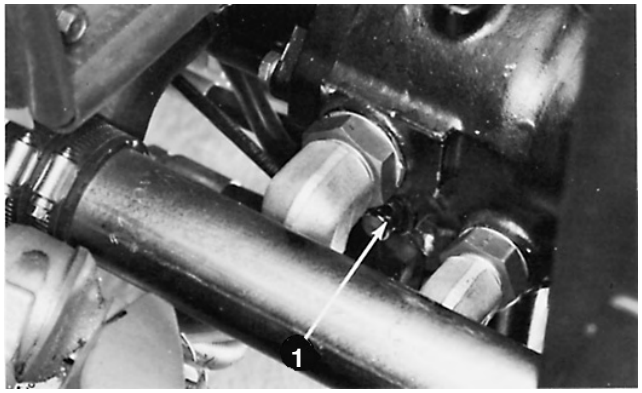

Figure 33

1. Bypass valve

Unlocked Hub Method
(Model 30582 only)

1. Either block the wheels or connect the machine to a towing vehicle with a rigid towing device.

Danger

The vehicle will roll with the front wheel hubs disengaged, and there will be no effective braking.

- **Park the vehicle on a level surface or block the wheels before unlocking the wheel hubs.**
- **Do not remove the wheel blocks or towing devices until the wheel hubs are securely locked.**

2. Remove bolts securing the disengage covers to both front wheel hubs.
3. Face the dimpled portion of the disengaged covers inward and reinstall the covers. Wheel hubs are now unlocked.
4. Lock the wheel hubs immediately after towing operations are completed. Remove disengage covers and reinstall with the dimpled portion facing away from the wheel hubs.

Operating Characteristics

Familiarization

Before mowing for the first time, practice operating in a large, open and relatively level area. Start and stop the engine, operate in forward and reverse in LOW RANGE ground speed. Practice using the cruise control. Lower and raise cutting units individually and simultaneously. When thoroughly familiar with machine functions, practice operating around trees and obstacles while using the individual wheel brakes. Also operate up and down slopes (IN LOW RANGE).

Points to consider while operating the traction unit, cutting units or other implements are the hydrostatic transmission, engine speed, load on the cutting blades or other implement components and the importance of the brakes. To maintain adequate power for the traction unit and implement components while operating, regulate traction pedal position to keep engine rpm high and relatively constant. Good rules to follow are; decrease ground speed as the implement load increases, and increase ground speed as the load decreases.

Four Wheel Drive Operation

Four wheel drive is only available in the low range. Place the High/Low Range Switch in the low range to operate the four wheel drive system. Four Wheel Drive is designed as a traction assist to the front traction wheels. In wet conditions or during a steep hill climb, loss of traction may occur causing the front tires to spin.

Toggle the switch in the on or forward position to engage the four wheel drive in forward. Toggle the switch in the momentary or reverse position will engage the four wheel drive in reverse.

Note: Come to a complete stop before engaging or disengaging the four wheel drive.

If the high/low range switch is not placed in the low range when the decks are lowered, the machine will automatically shift into the low range. If the decks are raised into the transport position the high/low range switch must be switched to low and then to high range to re–engage transport speed (high range).

Note: The rear tires will not spin freely causing loss of steering.

Note: Mow speed will drop from 7.5 mph to 5.5 ± .5 mph with 4 wheel drive engaged.

Warning Systems

If a warning light and audible warning come on during operation, stop immediately and correct the problem before continuing. Serious damage could occur if the machine is operated with an uncorrected problem. However, if the engine stops because of overheating, the emergency over–ride button can be used to operate the engine for short intervals (Fig. 34).



Figure 34

1. Engine override button

Mowing

When approaching area to mow, position the ground speed selector in LOW RANGE and release. Switch lever will return to neutral and High Range light will go out. Move the throttle lever to FAST and lower the cutting units. Pull the sleeve of the deck drive PTO switch up, position it in ENGAGE position and release. Lever will return to neutral position and PTO will be engaged automatically. Depress traction pedal slowly to begin cutting operation.

Note: After lowering mowers, do not allow levers to snap back to neutral. This could allow the levers to go past neutral, lock the cutting units in a non-float mode and prevent them from following turf contours.

Should either outboard cutting unit contact an immovable object while mowing, the mower lift arm latch assembly absorbs the impact and breaks away. This allows the cutting unit to swing rearward. Should this occur, stop the machine. Fully raise the cutting unit, then lower it to cutting position. This will allow the lift arm latch assembly to return to normal configuration. Be sure to inspect the cutting unit for damage and repair as necessary before resuming operation.

The individual wheel brakes can be used to assist in turning the machine. However, use them carefully, especially on soft or wet turf because it may be torn accidentally. The brakes are also beneficial to maintain traction; for example, in some slope conditions, the uphill wheel may slip and lose traction. If this occurs, gradually depress the uphill brake pedal until the uphill wheel stops slipping, thus increasing traction on the downhill wheel.

To stop mowing, depress the brake pedal to stop and disengage the cruise control (if used), move the PTO switch to DISENGAGE and release (switch returns to neutral), then fully raise the cutting units.

High Range Ground Speed Operation

We recommend HIGH RANGE ground speed operation be performed only on roads with the cutting units in fully raised position. Start the machine in LOW RANGE, then shift to HIGH RANGE. The HIGH RANGE Indicator light will turn ON, indicating the machine is in the HIGH RANGE mode. To cease HIGH RANGE operation, take foot off traction pedal and apply the brakes. Move throttle lever to SLOW and position ground speed selector in LOW RANGE. If the engine begins to labor while climbing an incline, ease off on the traction pedal and shift to LOW RANGE. This will prevent overload of the engine and hydraulic system.

Caution

- **Use extreme care while operating in HIGH RANGE ground speed selection.**
- **Watch closely for bystanders, other vehicles and possible hidden hazards and be prepared to stop quickly.**

Cruise Control Operation

While operating the machine at the desired ground speed, turn the cruise control switch to ON and press the cruise control actuating button. The traction pedal will be held in its position and a constant ground speed will be maintained. A light on the steering column indicates the cruise control is in operation. Ground speed can be changed by over–riding the traction pedal. The pedal will maintain its new position when the over–riding force is released.

To stop cruise control operation, turn cruise control switch to OFF position or depress the service brake.

Note: Hold the traction pedal in position when stopping cruise control operation, otherwise the machine will stop abruptly due to hydrostatic braking action.

If it is an emergency and it becomes necessary to stop suddenly while in cruise control, depress the service brake pedal, this breaks the electrical circuit, returns the traction pedal to neutral and stops the machine.

Stopping the Machine

To stop the machine and cease operation, take foot off traction pedal and apply the brakes. Move the throttle lever to SLOW, ground speed selector to LOW RANGE and deck lift controls to neutral. Switch cruise control to OFF, set the parking brake and turn ignition key to OFF. Remove the key if the machine is to be left unattended.

Important Allow the engine to idle for 5 minutes before shutting if off after a full load operation. Failure to do so may lead to turbo–charger failure.

Maintenance

Note: Determine the left and right sides of the machine from the normal operating position.

Recommended Maintenance Schedule

Maintenance Service Interval	Maintenance Procedure
After first 10 hours	• Check the fan and alternator belt adjustment. • Torque the wheel lug nuts. • Check the cutting unit drive belt adjustment.
After first 50 hours	• Change the engine oil and replace the filter. • Replace the hydraulic filter. • Torque cylinder head bolts and adjust valves. • Check the engine RPM (at idle and full throttle). • Change the planetary gear drive fluid.
Every 50 hours	• Lubricate all grease fittings. • Inspect the air filter, dust cup, and baffle. • Clean under the cutting unit belt covers. • Check the cutting unit drive belt adjustment.
Every 100 hours	• Check the fan and alternator belt tension. • Inspect the cooling system hoses.
Every 200 hours	• Service the air filter. • Torque the wheel lug nuts.
Every 250 hours	• Change the engine oil and replace the filter.
Every 400 hours	• Replace the fuel/water separator filter. • Check the battery level and cable connections. • Replace the hydraulic filter. • Adjust valves. • Check the engine RPM (at idle and full throttle). • Inspect and adjust fuel injection nozzles
Every 800 hours	• Change the planetary gear drive fluid. • Check the rear wheel toe-in. • Replace the fuel filter
Every 1000 hours or every 2 years, whichever occurs first	• Change the brake fluid. • Change the injection pump filter. • Change the thermostat. • Flush the cooling system and replace the hoses. • Drain/flush the fuel tank. • Change the hydraulic oil. • Torque cylinder head bolts.

Important Refer to your engine operator's manual for additional maintenance procedures.

Daily Maintenance Checklist

Duplicate this page for routine use.

Maintenance Check Item	For the week of: Mon.	Tues.	Wed.	Thurs.	Fri.	Sat.	Sun.
Check safety interlock operation.							
Check brake operation.							
Check engine oil level.							
Check cooling system fluid level.							
Drain water/fuel separator.							
Check air filter/pre-cleaner condition.							
Check radiator and screen for debris.							
Check unusual engine noises.							
Check unusual operating noises.							
Check height of cut.							
Check hydraulic system oil level.							
Check hydraulic hoses for damage.							
Check fluid leaks.							
Check tire pressure.							
Check instrument operation.							
Check condition of blades.							
Lubricate all grease fittings.[1]							
Touch up damaged paint.							

[1]immediately after **every** washing, regardless of the interval listed.

Notation for Areas of Concern

Inspection performed by:		
Item	**Date**	**Information**
1		
2		
3		
4		
5		
6		
7		
8		
9		
10		
11		
12		

Caution

If you leave the key in the ignition switch, someone could accidently start the engine and seriously injure you or other bystanders.

Remove the key from the ignition before you do any maintenance.

Service Interval Chart

GM 580-D QUICK REFERENCE AID

CHECK/SERVICE (DAILY)

1. ENGINE OIL LEVEL
2. HYDRAULIC FLUID LEVEL
3. ENGINE COOLANT LEVEL
4. FUEL/WATER SEPARATOR
5. TIRE PRESSURE
6. DIESEL FUEL LEVEL
7. FAN BELT TENSION
8. RADIATOR SCREEN (upper/lower)
9. AIR CLEANER
10. BRAKE FUNCTION
11. HYDRAULIC HOSE CONDITION
12. DECK BELT TENSION
13. CUTTING DECK BLADES
14. INTERLOCK SYSTEM
15. GREASE POINTS (10) SEE OPERATOR'S MANUAL FOR 50 HR INTERVAL GREASE POINTS.

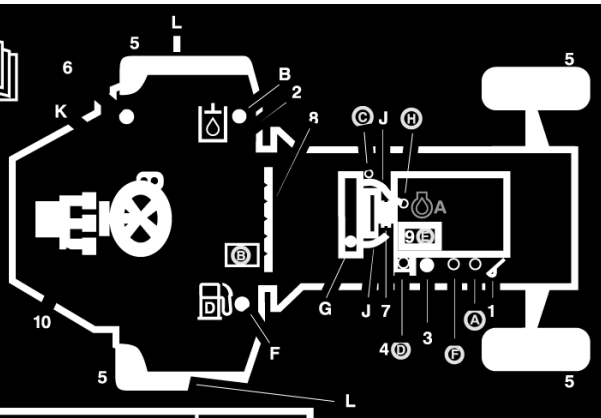

SPECIFICATIONS/CHANGE INTERVALS
* Initial maintenance required. Refer to operator's manual.

	FLUID TYPE		CAPACITY	CHANGE INTERVAL FLUID	CHANGE INTERVAL FILTER	FILTER PART NO.
A) ENGINE OIL*	Ambient Temperature	Oil Viscosity	8.5 QTS. w/filter 8.0 LITERS	100 HRS	100 HRS	99-2143
	23° to 104° F (-5° to 40° C)	SAE 30				
	41° to 122° F (5° to 50° C)	SAE 40				
	5° to 122° F (-15° to 50° C)	SAE 15W-40				
	-13° to 104° F (-25° to 40° C	SAE 10W-30				
	-22° to 68° F (-30° to 20° C)	SAE 5W-20				
B) HYDRAULIC FLUID*	MOBILE DTE 15M/SHELL TELLUS 68 or equivalent		40 GALS./152 L.	1000 HRS/ 2 YEARS	400 HRS	69-1720
C) HYDRAULIC SYSTEM BREATHER					1000 HRS/ 2 YEARS	68-6150
D) FUEL/WATER SEPARATOR					400 HRS	107-4395
E) AIR CLEANER						98-0801
F) FUEL SUPPLY	20 F OR LOWER ASTM NO 1-D	20 F OR HIGHER ASTM NO 2-D	28 GALS./106 L.	1000 HRS/2 YEARS	400 HRS	99-9403
G) ENGINE COOLANT	50/50 MIX OF ETHYLENE GLYCOL AND WATER		3.9 GALS./14.8 L.	DRAIN & FLUSH 1000 HRS/ 2 YEARS		
H) ENGINE THERMOSTAT				1000 HRS/ 2 YEARS		99-2155
I) INTERLOCK SWITCHES				1000 HRS/ 2 YEARS		
J) COOLANT HOSES				1000 HRS/ 2 YEARS		
K) BRAKE FLUID	DOT 3 HYDRAULIC BRAKE FLUID			1000 HRS/ 2 YEARS		
L) PLANETARY GEAR DRIVE*	API GL-5 SAE 80W-90 GEAR LUBRICANT			1000 HRS/ 2 YEARS		

NOTES:
- Follow operator's manual recommendation for lubrication of grease fittings.
- See operator's manual before towing.
- Use only batteries rated for LTV, industrial and constrction use.
- SEE OPERATOR'S MANUAL FOR ADDITIONAL INFORMATION.

108-8074

Lubrication

The following must be lubricated regularly with No. 2 general purpose lithium or molybdenum base grease. The chart below lists service intervals based upon normal operating conditions. However, lubricate more frequently under extreme conditions.

Use the above chart and figure 35 to determine the areas to lubricate and number of fittings involved. The left column numbers correspond with numbers in Fig. 35.

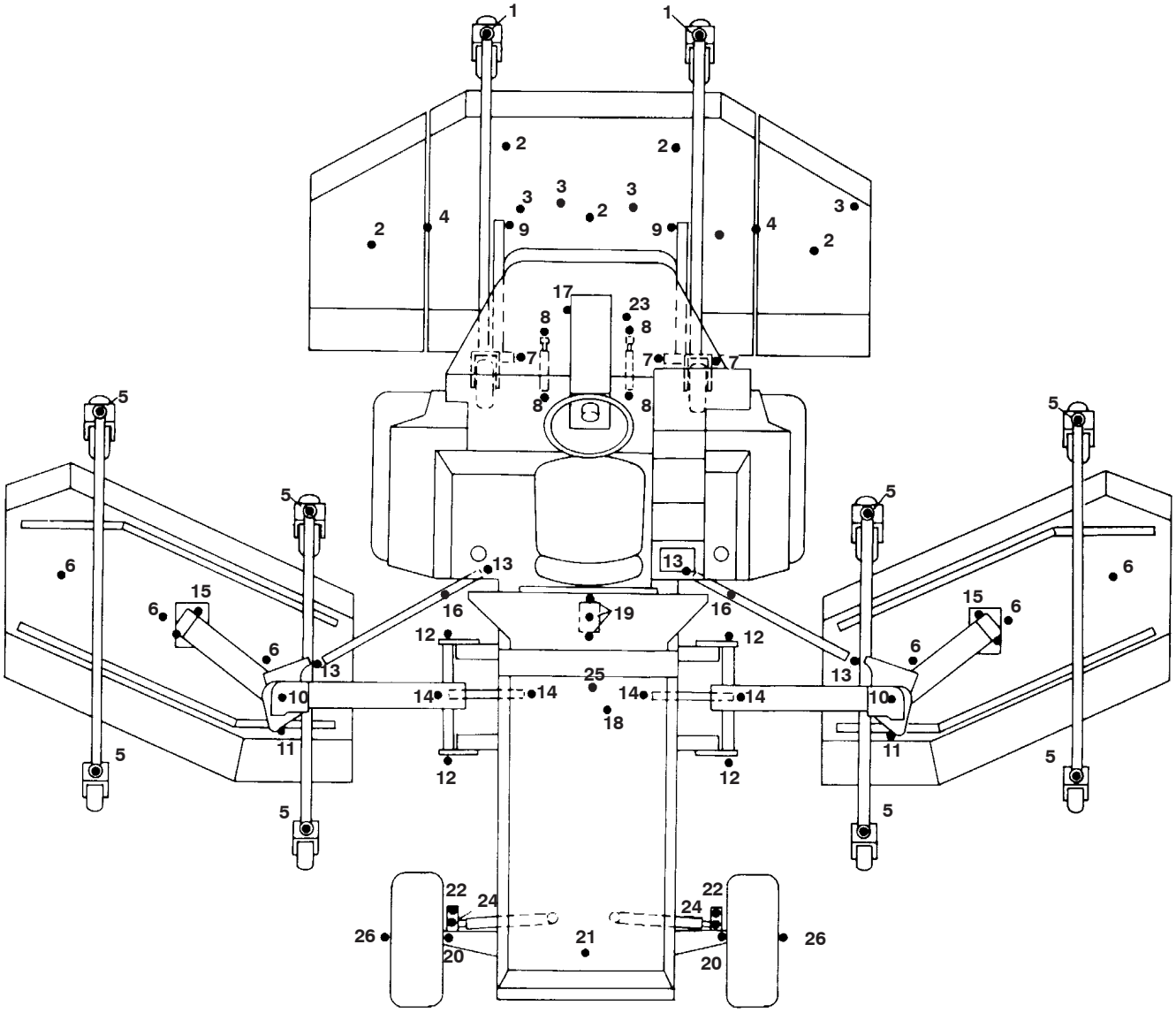

Figure 35

	Component	No. of Fittings	Service Interval
	Center Cutting Unit		
1	• Castor fork shaft bushings	2	Every 8 hours or daily
2	• Spindle shaft bearings	5	Every 50 hours
3	• Idler pulley bushings	4	Every 50 hours
4	• Deck hinge pivot bushings	2	Every 50 hours
	Right and Left-Hand Cutting Units		
5	• Castor fork shaft bushings	8	Every 8 hours or daily
6	• Spindle shaft bearings	6	Every 50 hours
	Front Lift Arm Assemblies		
7	• Left-hand and right-hand lift arm	3	Every 50 hours
8	• Hydraulic cylinder pivot bushings	4	Every 50 hours
9	• Lift arm ball joints	2	Every 50 hours
	Outboard Cutting Unit Lift Assemblies		
10	• Lift arm pivots	4	Every 50 hours
11	• Anti-sway arm bushings	2	Every 50 hours
12	• Lift arm elbow shaft bushings	4	Every 50 hours
13	• Latch ball joints	4	Every 50 hours
14	• Hydraulic cylinder pivot bushings	4	Every 50 hours
15	• Lift clevis pivot bushings	2	Every 50 hours
16	• Lower end latch mechanism	2	Every 50 hours
	Traction Unit		
17	• Steering brake pedal arms	2	Every 50 hours
18	• Engine water pump assembly	1	Every 50 hours
19	• Engine to pump drive yoke	3	Every 50 hours
20	• Rear wheel spindle bushings	2	Every 50 hours
21	• Rear axle pivot bushings	1	Every 50 hours
22	• Steering tie rod ball joint	2	Every 50 hours
23	• Service brake pivot bushings	1	Every 50 hours
24	• Hydraulic steering cylinder ball joints	2	Every 50 hours
25	• Drive shaft	9	Every 50 hours
26	• Rear wheel bearings (Model 30582 only)	2	Repack every 1000 hours

Engine Oil and Filter

The engine uses any high quality detergent oil having the American Petroleum Institute – API – “service classification” CH–4, CI–4 or higher.

Use the following chart to select the appropriate oil viscosity according to the ambient temperature.

Recommended oil viscosity is SAE 15W–40 for all seasons.

Ambient Temperature	Oil Viscosity
23° to 104° F (–5° to 40° C)	SAE 30
41° to 122° F (5° to 50° C)	SAE 40
5° to 122° F (–15° to 50° C)	SAE 15W–40
–13 to 104° F (–25° to 40° C)	SAE 10W–30
–22° to 68° F (–30° to 20° C)	SAE 5W–20

Toro Premium Engine oil is available from your distributor in either 15W–40 or 10W–30 viscosity. See the parts catalog for part numbers.

Checking the Oil Level

Check engine oil level after every five hours operation.

Important After the engine is operated, the oil drains back to the oil pan very slowly. Before checking the oil level, allow adequate time for the oil to drain back to the pan so an accurate measurement can be attained.

1. Unlatch and raise hood and prop it open. Unlatch and remove left side panel (Fig. 36). Make sure hood prop is secured in one of the mounting brackets on hood.



Figure 36

1. Engine hood
2. Left side panel
3. Hood latches
4. Side panel latch

2. Remove dipstick, wipe with clean rag (Fig. 37) and fully insert in tube. Remove from tube and check oil level. Level should be between the lower and upper holes on the dipstick (Fig. 39).
3. If level is low, remove filler cap (Fig. 38). Add proper type of oil until level is between the holes on the dipstick (Fig. 39). **Do not overfill**.

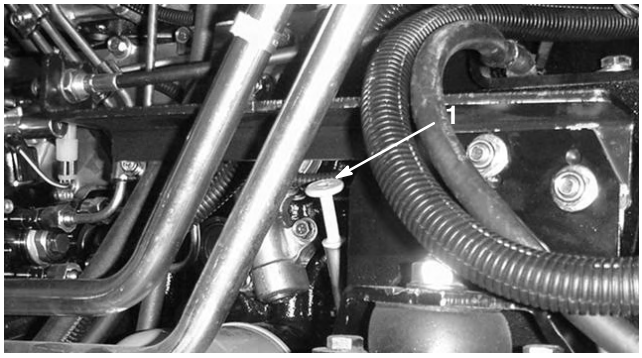

Figure 37

1. Dipstick

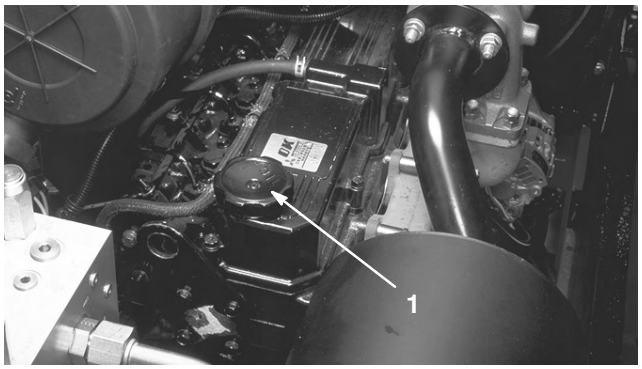

Figure 38

1. Engine oil fill cap

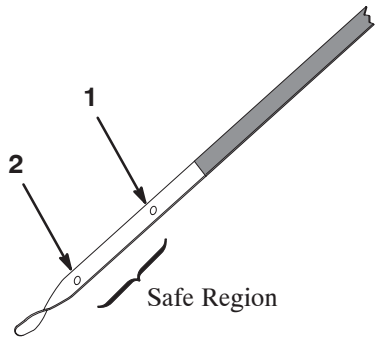

Figure 39

1. Upper hole
2. Lower hole

Changing the Engine Oil and Filter

The engine holds approximately 8.5 qt (8 l) of oil. Change oil and filter after the first 50 hours, then change both every 100 hours operation. However, change oil more frequently when engine is operated in dusty or sandy conditions. If possible, run engine just before changing oil because warm oil flows better and carries more contaminants than cold oil.

1. Unlatch and raise hood and prop it open (Fig. 36). Make sure hood prop is secured in one of the mounting brackets on hood. Unlatch and remove both side panels (Fig. 36).
2. Place drain pan in line with the drain plug (Fig. 40). Clean area around drain plug.

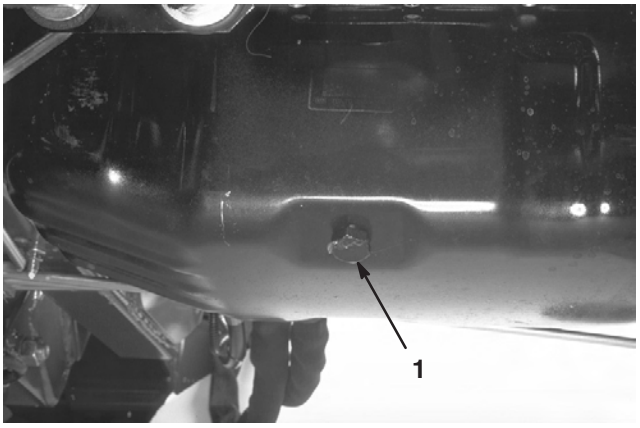

Figure 40

1. Engine oil drain plug

3. Remove drain plug and allow oil to drain into pan. Remove and replace oil filter (Fig. 41); refer to parts catalog for replacement number. Apply a coating of oil to the filter O-ring before installing filter. Refer to the engine manual for the filter tightening procedure.

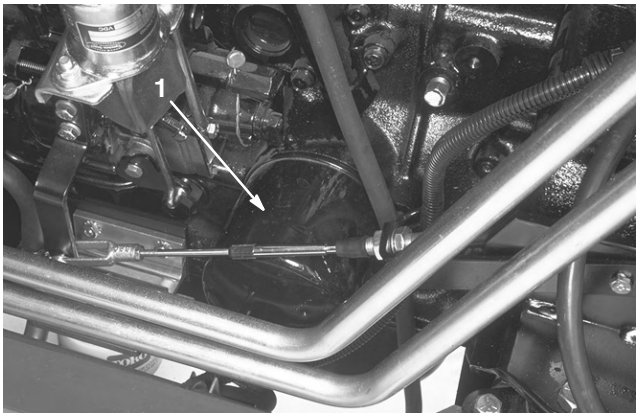

Figure 41

1. Engine oil filter

Replacing Water Separator Filter Element

1. Locate the fuel filter/water separator near the fan on the left side of engine and drain the water chamber daily (Fig. 42).
2. Every 400 hours operation, or yearly, replace the filter element in the fuel filter/water separator (Fig. 42) and drain water from the fuel tank. Apply clean fuel to the filter O-ring. Use hands only to install and tighten filter.

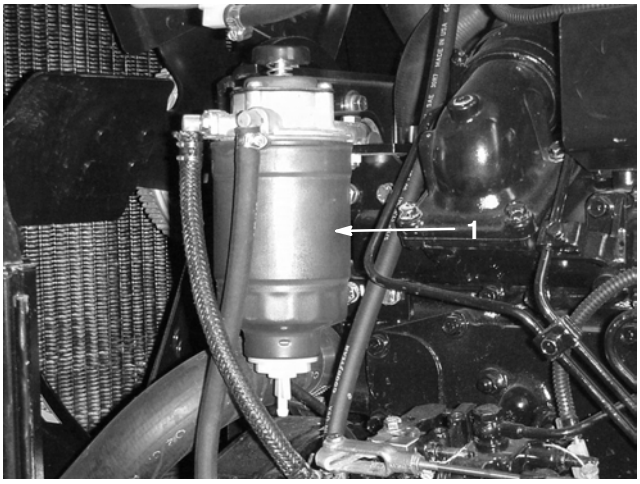

Figure 42

1. Fuel filter/water separator

Replacing Fuel Filter

Replace the filter element after every 800 operating hours.

1. Clean the area where the filter canister mounts (Fig. 43).

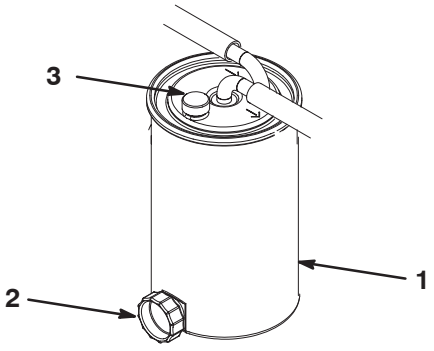

Figure 43

1. Fuel filter /water separator
2. Filter drain plug
3. Breather valve

2. Place a drain pan under the fuel filter.
3. Open the filter drain plug and breather valve (Fig. 43).

4. Loosen the hose clamps and disconnect the fuel lines from the top of the filter.
5. Loosen the fasteners on the filter mounting band and remove the filter canister. Dispose of properly.
6. Install the new filter canister and tighten the mounting band carriage bolt.
7. Install the fuel lines and clamps per the inlet and outlet markings on the top of the filter.
8. Make sure the filter drain plug is closed. Open the filter breather valve until fuel leaks out, then close the valve.
9. Start the engine and check for leaks.

Important If the fuel system becomes contaminated or if machine is to be stored for an extended period, drain fuel tank by pumping fuel out the top of the tank. Clean tank and flush it with clean fuel.

Important Following the maintenance steps listed above will, under normal conditions, keep the system trouble-free. However, if the indicator light on the control panel and audible warning signal activate during operation, the engine should be stopped and the fuel system serviced before operation is resumed. This can prevent serious engine damage from occurring.

Engine Cooling System

The cooling system holds approximately 3.9 gal (14.7 l) of a 50/50 solution of ethylene glycol anti–freeze and water. To properly maintain the system, use the following procedures:

1. Check coolant level each day before starting the engine; refer to Check Cooling System in Before Operating section.

Caution

If the engine has been running, the pressurized, hot coolant can escape and cause burns.

- **Do not open the radiator cap when the engine is running.**
- **Use a rag when opening the radiator cap, and open the cap slowly to allow steam to escape.**

2. Each day after operation, clean debris from the radiator grille. Clean more frequently in dusty and dirty conditions.
   A. Move seat forward as far as possible.
   B. Remove upper and lower grille assemblies (Fig. 44).



Figure 44

1. Upper grille
2. Lower grille

   C. Use compressed air to clean the grilles and remove debris from grille mounting areas.
   D. Install grilles after cleaning, lower and lock seat in position.
3. Every 100 hours operation, clean the radiator and hydraulic cooler fins. Clean more frequently in dusty and dirty conditions.
   A. Use procedures in step 2, items A–C.
   B. Unlatch latch handles on both sides and remove radiator cowl and grille support (Fig. 45).

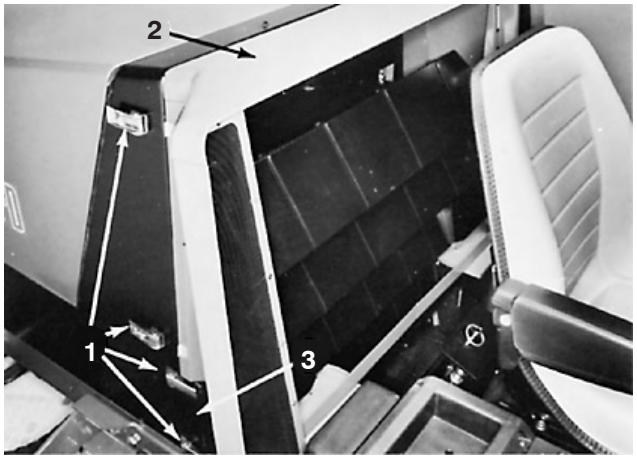

Figure 45

1. Latch handles
2. Radiator cowl
3. Grille support

   C. Remove wing nuts securing top of oil cooler to upper radiator support and pivot top of oil cooler away from radiator (Fig. 46).

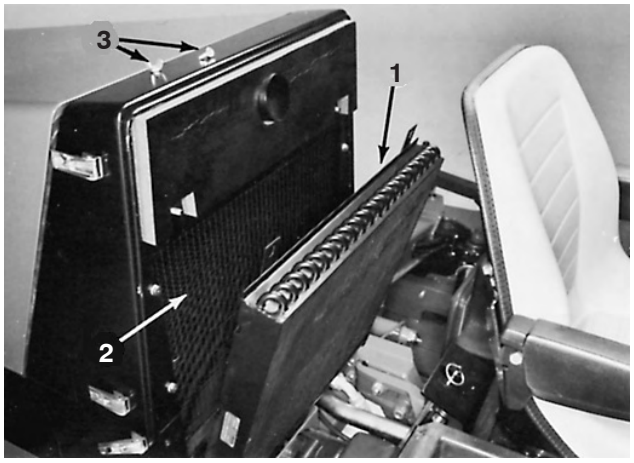

Figure 46

1. Oil cooler
2. Radiator
3. Wing nuts

D. Unlatch and raise hood and prop it open. Use compressed air from the engine fan side to clean the radiator and oil cooler fins.

E. Assemble components after cleaning is completed.

4. Every 100 hours operation, inspect alternator belt for condition and proper tension (Fig. 47). Replace belt if condition warrants. Check and adjust tension as follows:

A. Unlatch and raise hood and prop it open. Unlatch and remove right side panel.

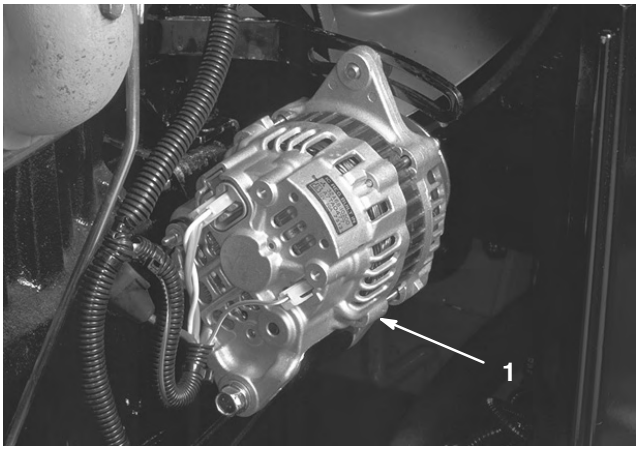

Figure 47

1. Alternator

B. Unlatch and raise hood and prop it open. Unlatch and remove right side panel.

C. Proper tension will allow 1/2 in. (13 mm) deflection when a force of 10 lb. is applied on the belt midway between the pulleys. If deflection is incorrect, proceed to step D; if deflection is correct, install panel and close hood.

D. Loosen the 3 bolts securing alternator to plate and mounting bracket (Fig. 47). Rotate alternator away from engine to increase tension and tighten bolts. Check belt tension after adjustment and re-adjust, if necessary.

E. Install panel and close hood.

5. Every 100 hours operation, check condition of cooling system hoses and tightness of connections. Repair, as needed.

6. Every 1000 hours, or 2 years, drain and flush the cooling system and replace the thermostat and hose assemblies.

General Air Cleaner Maintenance

- Check the air cleaner body for damage which could cause an air leak. Replace if damaged. Check the whole intake system for leaks, damage or loose hose clamps.
- Service the air cleaner filter every 200 hours or earlier if engine performance suffers due to extremely dusty, dirty conditions. Changing the air filter before it is necessary only increases the chance of dirt entering the engine when the filter is removed.
- Be sure the cover is seated correctly and seals with the air cleaner body.

Servicing the Air Cleaner

1. Release the latches securing the air cleaner cover to the air cleaner body (Fig. 48).

2. Remove the cover from the air cleaner body (Fig. 48). Before removing the filter, use low pressure air (40 psi, clean and dry) to help remove large accumulations of debris packed between outside of the filter and the canister. Avoid using high pressure air which could force dirt through the filter into the intake tract. This cleaning process prevents debris from migrating into the intake when the filter is removed.

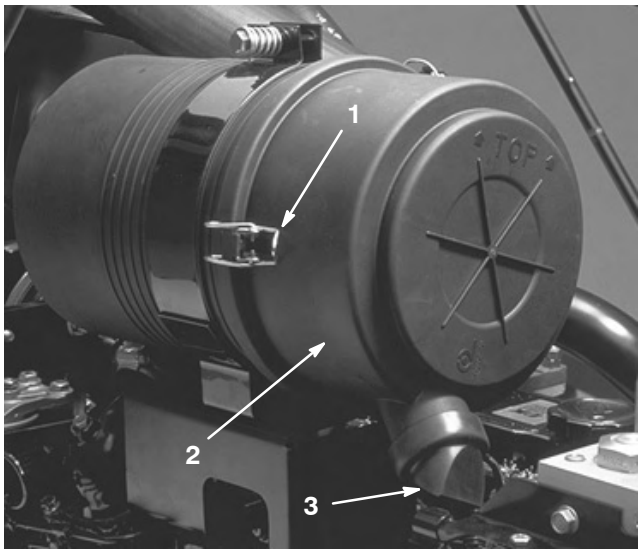

Figure 48

1. Air cleaner latches
2. Cover
3. Dirt ejection port

3. Remove and replace the filter. Cleaning of the used element is not recommended due to the possibility of damage to the filter media. Inspect the new filter for shipping damage, checking the sealing end of the filter and the body. Do not use a damaged element. Insert the new filter by applying pressure to the outer rim of the element to seat it in the canister. Do not apply pressure to the flexible center of the filter.

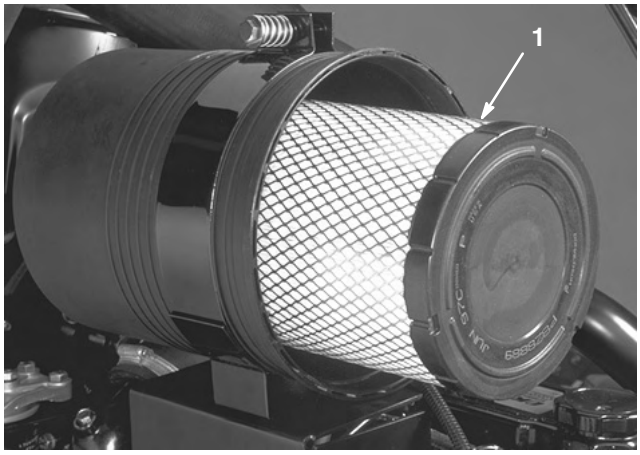

Figure 49

1. Air cleaner filter

4. Clean the dirt ejection port located in the removable cover. Remove the rubber outlet valve (Fig. 48) from the cover, clean the cavity and replace the outlet valve.

5. Install the cover orienting the rubber outlet valve in a downward position – between approximately 5:00 to 7:00 when viewed from the end.

6. Secure the latches.

Servicing the Hydraulic System

The machines reservoir is filled at the factory with approximately 40 U.S. gallons (151.4 l) of high quality hydraulic fluid. **Check the level of the hydraulic fluid before the engine is first started and daily thereafter.** The recommended replacement fluid is:

Toro Premium All Season Hydraulic Fluid
(Available in 5 gallon pails or 55 gallon drums. See parts catalog or Toro distributor for part numbers.)

Alternate fluids: If the Toro fluid is not available, other fluids may be used provided they meet all the following material properties and industry specifications. We do not recommend the use of synthetic fluid. Consult with your lubricant distributor to identify a satisfactory product Note: Toro will not assume responsibility for damage caused by improper substitutions, so use only products from reputable manufacturers who will stand behind their recommendation.

Antiwear Hydraulic Fluid, ISO VG 46

Material Properties:

Viscosity, ASTM D445	cSt @ 40°C 65 to 71 cSt @ 100°C 8.4 to 8.9
Viscosity Index ASTM D2270	97 to 107
Pour Point, ASTM D97	–18°F to –30°F

Industry Specifications:
Vickers I–286–S (Quality Level), Vickers M–2950–S (Quality Level), Denison HF–0

Note: Many hydraulic fluids are almost colorless, making it difficult to spot leaks. A red dye additive for the hydraulic system oil is available in 2/3 oz. (20 ml) bottles. One bottle is sufficient for 4–6 gal (15–22 1) of hydraulic oil. Order part no. 44–2500 from your authorized Toro distributor.

Note: When changing from one type of hydraulic fluid to another, be certain to remove all the old fluid from the system, as some fluids are incompatible with others.

Checking the Oil Level

1. Visually check hydraulic oil level daily through sight glass (Fig. 50). With machine on a level surface, oil should be in the middle of the sight glass when warm and slightly below level when cold.

2. If oil needs to be added, clean area thoroughly around the fill cap before removing cap (Fig. 50). Add oil until proper level is indicated in sight glass.

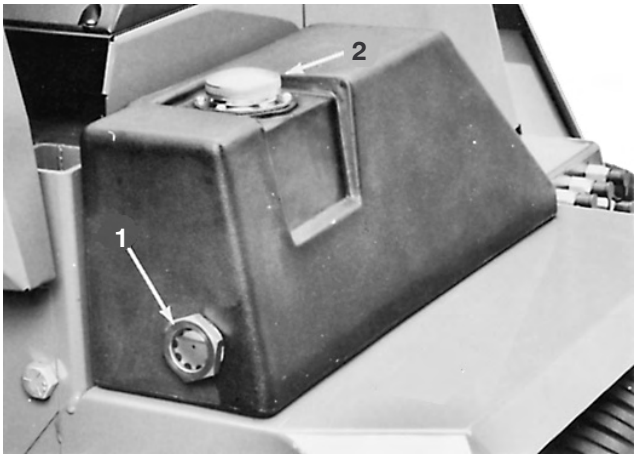

Figure 50

1. Hydraulic oil level sight glass
2. Reservoir fill cap

Replacing the Hydraulic Filter

After 50 hours initial operation, replace the hydraulic filter (Toro Part No. 69–1720). Replace the filter every 400 hours of operation thereafter.

1. Place drain pan under filter and remove filter (Fig. 51).

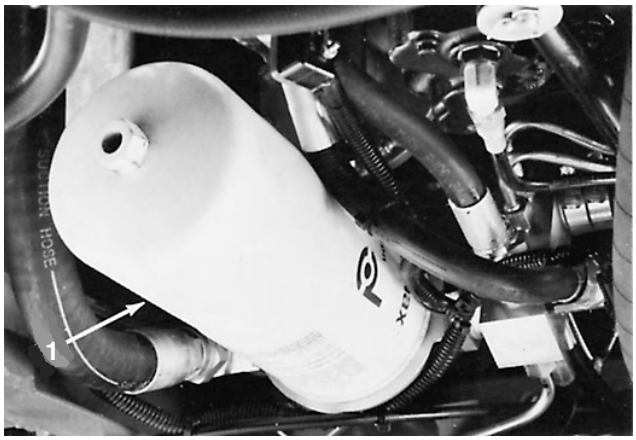

Figure 51

1. Hydraulic oil filter

2. Coat O-ring of the replacement filter with clean hydraulic oil before installing.
3. To tighten filter, hand turn filter element onto filter head until element is firmly seated against the head.
4. Start engine and check for leaks. Check oil level after engine has been stopped. Add oil, if necessary.

Inspecting the Lines and Fittings

Every 100 hours operation inspect all hoses, lines and fittings for signs of leakage or damage (blisters, cut hoses, etc.)

Warning

Hydraulic fluid escaping under pressure can penetrate skin and cause injury.

- **Make sure all hydraulic fluid hoses and lines are in good condition and all hydraulic connections and fittings are tight before applying pressure to the hydraulic system.**
- **Keep your body and hands away from pin hole leaks or nozzles that eject high pressure hydraulic fluid.**
- **Use cardboard or paper to find hydraulic leaks.**
- **Safely relieve all pressure in the hydraulic system before performing any work on the hydraulic system.**
- **Get immediate medical help if fluid is injected into skin.**

Draining Water from the Hydraulic Reservoir

Every 400 hours operation, drain water from reservoir at three (3) locations.

1. Place drain pan under reservoir.
2. Locate plugs at right rear behind front wheel, at rear center and front center of reservoir (Fig. 52).

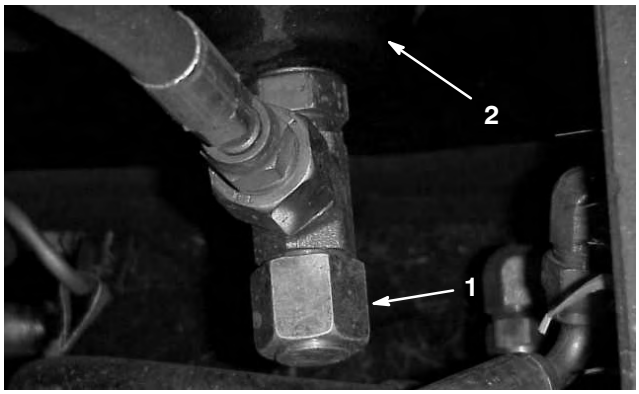

Figure 52

1. Drain plug—front center
2. Hydraulic reservoir

3. Open each plug approximately one turn. Allow fluid to drain until only hydraulic oil is draining and tighten plug.
4. Check hydraulic oil level. Add oil, as necessary.

Draining the Hydraulic Reservoir

Every 1000 hours operation, or yearly, drain and replace hydraulic fluid in reservoir. Total system capacity is approximately 40 gal. (151 l); reservoir capacity is approximately 32 gal. (121 l).

Note: If oil becomes contaminated (oil appears milky or black), the system must be flushed. Contact your local Toro distributor for assistance.

1. Place drain pan under reservoir. In turn, remove all 3 drain plugs and let oil drain into pan (Fig. 52).
2. Inspect O-rings on plugs and replace, if damaged. Install drain plugs.
3. With machine on level surface, fill reservoir with hydraulic oil until oil level is midway up in sight glass (Fig. 50).
4. Install reservoir cap. Start engine and use all hydraulic controls to distribute oil throughout the system. Check for leaks. If repairs are needed, shut engine off before beginning.
5. Check oil level; add if necessary.

Hydraulic System Breather

During normal operating conditions, replace the hydraulic system oil breather every 1000 hours operation, or yearly. Replace breather more frequently in extremely dusty, dirty conditions.

1. Release latches, open hood and prop it open with rod.
2. Breather is located along right side of radiator (Fig. 53). Clean area around it, unscrew it with a wrench and install replacement.

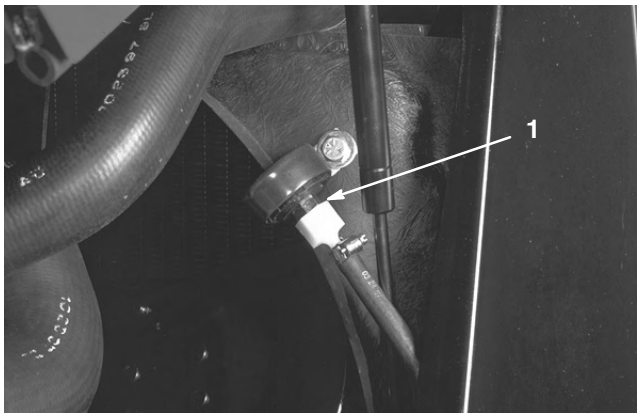

Figure 53

1. Hydraulic system breather

3. Close and latch hood.

Hydraulic System Test Ports

The test ports (Fig. 54 & 55) are used for testing the hydraulic circuits. Contact your local Toro distributor for assistance on use of these components. The test ports are located underneath the center of the machine.

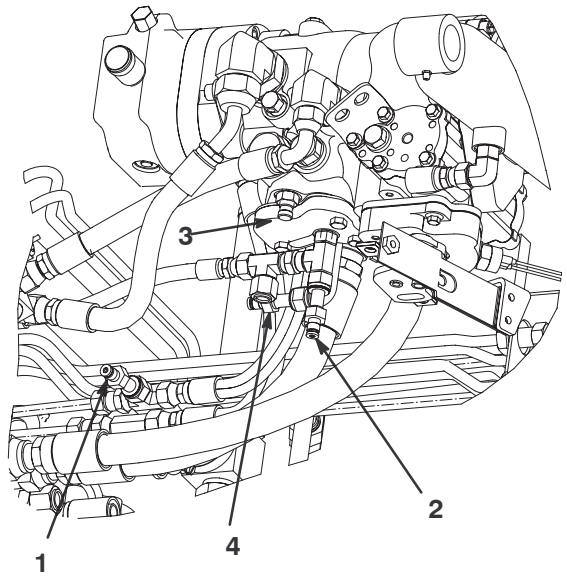

Figure 54

1. Steering control
2. Charge pump
3. Traction—reverse
4. Traction—forward



Figure 55

1. Deck lift

Servicing the Planetary Gear Drive

Change oil initially after 50 hours operation and every 800 hours, or yearly. Use high quality SAE 80–90 wt. gear lube as replacement. Check oil if leakage is noted.

Checking the Oil Level

1. With machine on level surface, position wheel so the check/drain plug is at either three or nine o'clock position (Fig. 56).

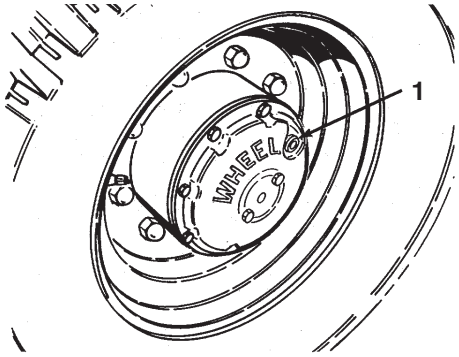

Figure 56

1. Check/drain plug (3 or 9 o'clock position)

2. Remove plug. Oil should be to bottom of the hole.
3. Add gear oil, if necessary, to bring up to proper level and install plug.
4. Repeat steps 1–3 on the opposite gear assembly.

Draining the Gear Oil

1. With machine on level surface, position wheel so the check/drain plug is at lowest position.
2. Place drain pan under hub, remove plug and allow oil to drain.
3. When oil has drained, position wheel so plug hole is at three or nine o'clock position (Fig. 56).
4. Add approximately 32 oz. (1.24 l) high quality SAE 80–90 wt. gear lube to bring level up to bottom of hole and install plug.
5. Repeat steps 1–4 on the opposite gear assembly.

Servicing the Battery

Warning

Battery posts, terminals, and related accessories contain lead and lead compounds, chemicals known to the State of California to cause cancer and reproductive harm. ***Wash hands after handling*****.**

Important Before welding on the machine or performing service to the electrical system, disconnect negative (–) battery cable from the batteries to prevent damage to the electrical system.

Check battery cables and connections every 100 hours and check batteries with a hydrometer every 500 hours operation. Keep terminals and entire battery case clean. Clean batteries with a solution of baking soda and water, then rinse with clear water. To prevent corrosion, coat battery posts and cable connectors with Grafo 112X (Skin-over) grease, Toro Part No. 505–47.

1. Unlatch, raise, and prop hood open. Unlatch and remove left engine side panel.
2. Remove capscrews securing battery tray to machine and slide tray out (Fig. 57).

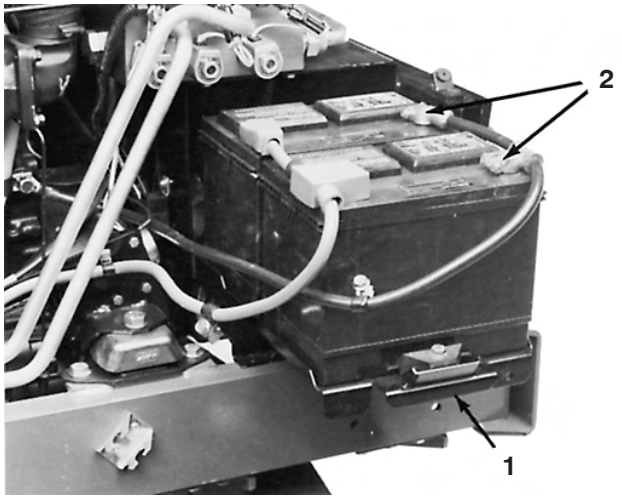

Figure 57

1. Battery tray
2. Negative (–) cable connectors

Warning

Battery terminals or metal tools could short against metal tractor components, causing sparks. Sparks can cause the battery gasses to explode, resulting in personal injury.

- **When removing or installing the battery, do not allow the battery terminals to touch any metal parts of the tractor.**
- **Do not allow metal tools to short between the battery terminals and metal parts of the tractor.**

3. Check both batteries for charge with a hydrometer. If batteries check acceptably, slide tray back in place, secure with capscrews and install side panel. If batteries require charging, proceed to step 4.

Warning

Incorrect battery cable routing could damage the tractor and cables, causing sparks. Sparks can cause the battery gasses to explode, resulting in personal injury.

- **Always *disconnect* the negative (black) battery cable before disconnecting the positive (red) cable.**
- **Always *reconnect* the positive (red) battery cable before reconnecting the negative (black) cable.**

4. Remove negative (–) battery cable connectors from batteries (Fig. 57). Connect a 3 to 4 amp. battery charger to the posts. Charge the batteries at a rate of 3 to 4 Amperes for 4 to 8 hours.

Warning

Charging the battery produces gasses that can explode.

Never smoke near the battery and keep sparks and flames away from the battery.

5. When batteries are fully charged, disconnect charger from electrical outlet and battery posts.

6. Connect negative (–) cable ends, slide tray back in place, and secure with capscrews. Install side panel, close hood and secure both with latches.

Fuses and Circuit Breaker

Fuses and fusible links are incorporated for the protection of the entire wiring circuit. The fuses are located under the control panel to the right of the seat (Fig. 58). The fusible links, locate throughout the wire harness, can be replaced if total loss of electrical function results. If total loss of electrical function occurs, find and correct the malfunction before replacing the fusible links.

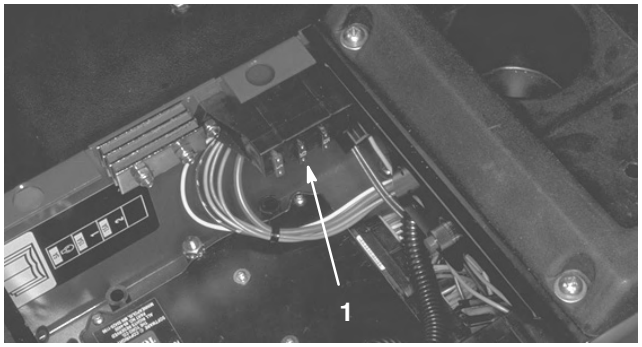

Figure 58

1. Fuse block (2)

Servicing the Brake System

Check brake fluid level every 50 hours operation. Replace fluid every 1000 hours operation, or yearly. Replenish system with DOT 3 hydraulic brake fluid. To check fluid level:

1. Raise floor panel in front of seat (Fig. 59). Remove tool tray.

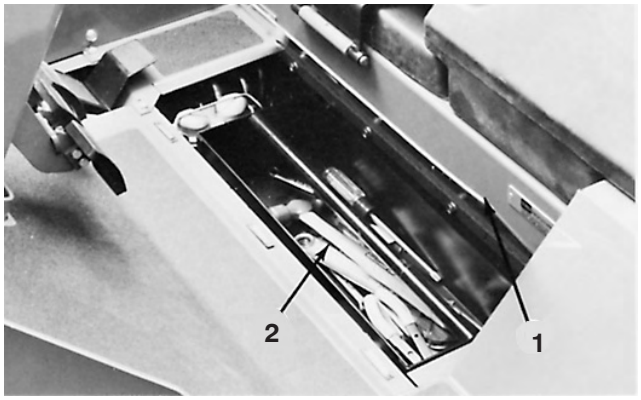

Figure 59

1. Floor plate
2. Tool tray

2. Snap cover bail off cover and remove cover from master cylinder (Fig. 60).

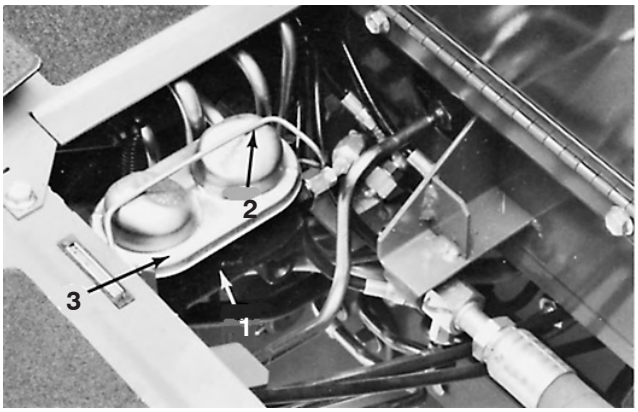

Figure 60

1. Master cylinder
2. Cover bail
3. Reservoir cover

Wheels and Tires

Torque Wheel Nuts

After the first ten (10) hours operation, check torque on the wheel nuts and every 200 hours thereafter.

1. Torque the lug nuts for the wheels to 60–70 ft.-lb. (81–95 N·m).

Checking the Tire Pressure

Since the machine can be operated under many different types of turf conditions, proper tire pressure is very important. Check tire condition and pressure daily and use the following guide to maintain maximum turf conditions:

Traction Unit Tires

- Under **Normal** mowing conditions and when used on a wide variety of turf grasses: 15 psi (100 kPa) front; 13 psi (90 kPa) rear.
- When turf is **wet** and softer than normal, use low pressure: 12 psi (80 kPa) front and 9 psi (60 kPa) rear.
- When turf is **dry** and harder than normal, use higher tire pressure: 18 psi (120 kPa) front and rear.

Castor Wheel Tires

- All conditions use 50 psi (340 kPa) castors.

Cutting Unit Lubrication

Follow guidelines in the Lubrication Chart to properly maintain the units. To gain access to the center and inner spindle shaft fittings on each outboard unit, proceed as follows:

Note: To grease spindle bearings, apply 2–3 pumps with a hand grease gun for each spindle.

1. Position machine on level surface, lower cutting units to shop floor, engage parking brake, shut engine off and remove key from ignition switch.
2. Remove the inner deck pulley cover (Fig. 61).



Figure 61

1. Inner cover

3. Use belt to rotate inner and center spindle pulleys until grease fittings can be accessed with a grease gun.
4. Grease fittings and replace cover.

Blade Maintenance

Note: Although not needed for normal maintenance procedures, the front cutting unit can be pivoted (tilted) to a fully upright position (Fig. 62). Should you desire to tilt the cutting unit, proceed as follows:

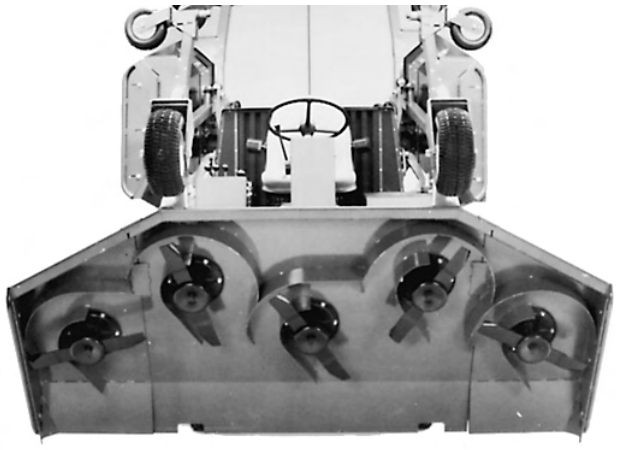

Figure 62

Tilting the Cutting Unit Upright

1. Position front cutting unit so rear castor wheels just clear the floor, set parking brake and shut engine off.

2. Remove deck tilt link from tool box under traction unit floor (Fig. 59) and klik pins from weldments on traction unit frame and cutting unit lift arm.

3. Remove hairpin cotters and clevis pins from the (2) rear castor assemblies (Fig. 63). Set the left hand clevis pin aside and insert the right hand clevis pin into the most forward holes in the castor wheel arm on the right side of the unit (Fig. 59). The castor arm and pin should be resting on top of the unit.

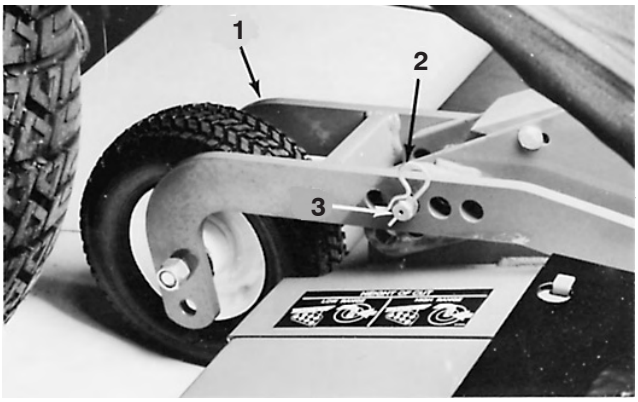

Figure 63

1. Rear castor wheel assembly
2. Hairpin cotter
3. Clevis pin

4. Sit on seat, start the engine and raise the cutting unit to the full up position so the spring latch on the left lift arm disengages from the cutting unit. Stop the engine and remove the key from the ignition switch.

5. Fit deck tilt link over weldment on the right side of traction unit and secure with klik pin. Position link so it clears when cutting unit is raised. Keep remaining klik pin handy to secure opposite end of link to cutting unit arm weldment (Fig. 64).

6. Use at least one other person to tilt the cutting unit. Grasp the front of the unit and lift it to an upright position (Fig. 62).

7. Hold the unit upright, fit link end over pin on cutting unit lift arm weldment, and secure with klik pin.

Caution

Personal injury may occur if only one person tries to pivot the cutting unit up or down.

- **Use at least one other person to assist in lifting or lowering the unit.**
- **Always use proper lifting techniques and hold the unit securely when pivoting it up or down.**

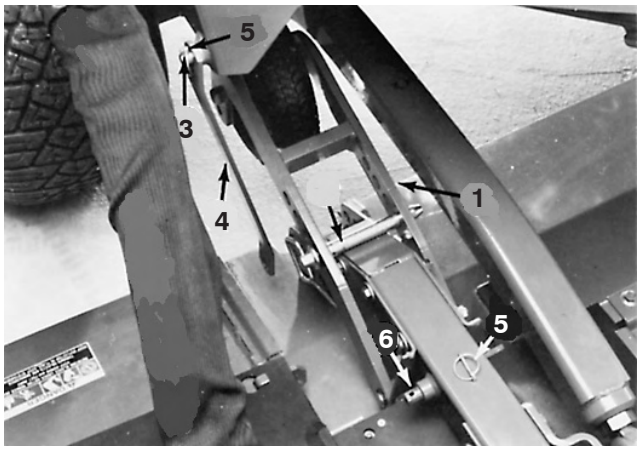

Figure 64

1. Right rear castor wheel assembly
2. Clevis pin
3. Weldment
4. Deck tilt link
5. Klik pin (2)
6. Cutting unit arm weldment

To Pivot the Cutting Unit Down into the Operating Position

1. With the help of an assistant, hold the unit upright, remove the klik pin securing the link end and remove link end from the weldment.

2. Pivot (tilt) the cutting unit downward.

3. Sit on seat, start engine and lower the cutting unit so castor wheels just clear the floor.

4. Remove the height-of-cut pin from the right castor wheel arm. Insert it and the left height-of-cut pin in the proper height-of-cut holes in the castor arms and cutting unit.

Blade Bolt Torque

Check blade bolt torque daily or after blade strikes a solid object. However, if solid object causes blade to be damaged or bent to a degree it is unusable, replace it; refer to Removing Cutting Unit Blade, below.

1. Raise cutting units to transport position, engage parking brake, shut engine off and remove key from ignition switch.

2. Using a torque wrench and rag or thickly padded glove to hold blade, torque blade bolts on all cutting units to 140–165 ft.-lb. (190–224 N·m).

Checking for a Bent Blade

After striking a foreign object, inspect the machine for damage and make repairs before restarting and operating the equipment. Torque all the spindle pulley nuts to 140–160 ft–lbs.

1. Position the machine on a level surface. Raise the cutting unit, engage the parking brake, put the traction pedal in neutral, put the PTO lever in the Off position, stop the engine, and remove the ignition key. Block the cutting unit to prevent it from accidentally falling.
2. Rotate the blade until the ends face forward and backward (Fig. 65). Measure from the inside of the cutting unit to the cutting edge at the front of the blade. Remember this dimension.



Figure 65

3. Rotate the opposite end of the blade forward. Measure between the cutting unit and cutting edge of the blade at the same position as in step 2. The difference between the dimensions obtained in steps 2 and 3 must not exceed 1/8 in. (3 mm). If the dimension exceeds 1/8 in. (3 mm), the blade is bent and must be replaced; proceed to Removing the Cutting Unit Blade.

Removing the Cutting Unit Blade

Replace the blade if a solid object is hit, the blade is out of balance or bent. Always use genuine TORO replacement blades to ensure safety and optimum performance. Never use blades made by other manufacturers because they could be dangerous. Torque all the spindle pulley nuts to 140–160 ft–lbs.

1. Raise cutting unit to transport position, engage parking brake, shut the engine off and remove key from ignition.
2. Using a rag or thickly padded glove, grasp end of blade. Remove blade bolt, lockwasher, anti–scalp cup and blade from spindle assembly (Fig. 66).

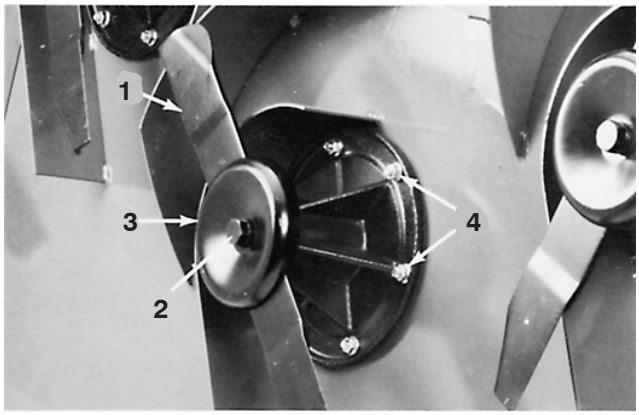

Figure 66

1. Cutting blade
2. Blade bolt and lock washer
3. Anti-scalp cup
4. Carriage bolt and flange locknut (8)

Danger

A worn or damaged blade can break, and a piece of the blade could be thrown into the operator's or bystander's area, resulting in serious personal injury or death.

- **Inspect the blade periodically for wear or damage.**
- **Replace a worn or damaged blade.**

3. When assembling, make sure blade sail is facing up. Torque the blade bolt to 140–165 ft.-lb. (190–224 N·m).

Inspecting and Sharpening the Blade

After striking a foreign object, inspect the machine for damage and make repairs before restarting and operating the equipment. Torque all the spindle pulley nuts to 130–160 ft–lbs.

1. Raise cutting units to transport position, engage parking brake, shut engine off and remove key from ignition switch.
2. Carefully examine cutting ends of the blade, especially where the flat and sail (curved part) meet (Fig. 67-A). Since sand and abrasive material can wear the metal connecting the flat and sail portions, check the blade

before using the machine. If any wear is noticed (Fig. 67-B), replace the blade; refer to Removing the Cutting Unit Blade, page 52.

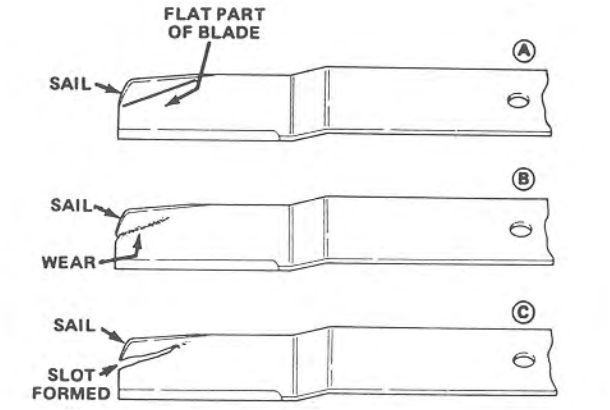

Figure 67

3. Examine cutting edges of all blades. Sharpen cutting edges that are dull or nicked. To assure sharpness, sharpen only the top side of the cutting edge while maintaining the original cutting angle (Fig. 68). If the same amount of metal is removed from both cutting edges, the blade will remain balanced.

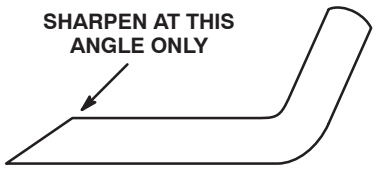

Figure 68

End View

4. To check blade for being straight and parallel, remove from cutting unit. Lay blade on level surface and check its ends. Blade ends must be slightly lower than blade center and cutting edge lower than heel of the blade. If so, it will produce good quality–of–cut and require minimal engine power to turn. By contrast, a blade with ends higher than blade center, or with cutting edge higher than the blade heel, is warped or bent and must be replaced.

5. When assembling, make sure blade sail is facing up. Torque the blade bolt to 140–165 ft.-lb.

Note: After striking a foreign object, torque all the spindle pulley nuts to 140–160 ft–lbs.

Inspecting and Adjusting the Cutting Unit Belt Tension

Important After first ten hours of operation, check new belts for proper tension; thereafter, check tension every 50 hours.

Front Cutting Unit

Note: Belts for wing unit spindles are tensioned by spring loaded idlers and normally do not require tensioning.

1. Position machine on level surface, lower cutting unit to shop floor, engage parking brake, stop the engine, and remove the ignition key.

2. Remove deck covers.

3. Loosen jam nut and relieve tension on springs with tensioner bolt (Fig. 69).

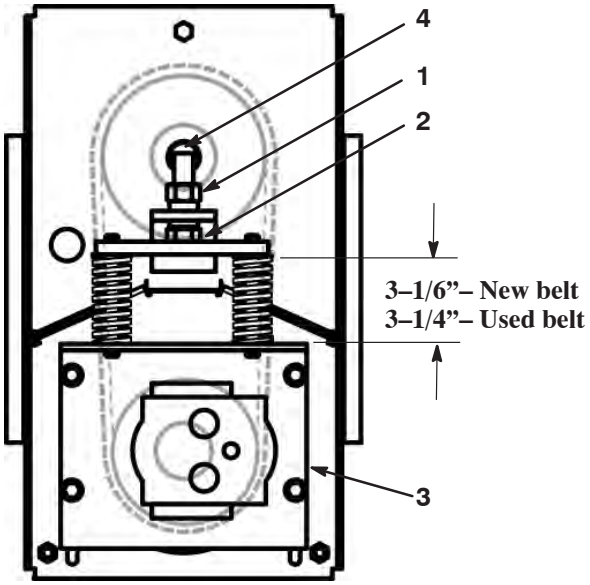

Figure 69

1. Jam nut
2. Tensioner bolt
3. Slide plate
4. Tensioner bolt

4. Loosen (4) capscrews securing slide plate to motor mount (Fig. 69).

5. Tighten tensioner bolt until springs are compressed to dimension shown in figure 69.

6. Tighten jam nut securing adjustment (Fig. 69).

7. Tighten (4) capscrews securing slide plate to motor mount (Fig. 69).

8. Replace deck covers.

Outboard Cutting Units

1. Remove deck covers. To check belt tension, apply 8 lb. (35.5 N) force at mid-span of belt and check deflection. There should be approximately 5/16 in. (7.9 mm) deflection. If deflection is incorrect, proceed to step 2. If deflection is correct, proceed to step 3.
2. To tension belts, loosen flange locknut at top of idler pulley (Fig. 70). Slide pulley against belt until proper tension is reached. Hold pulley in position and tighten locknut.

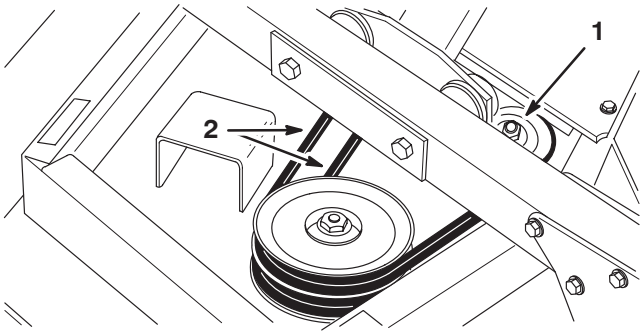

Figure 70

1. Idler pulley flange locknut
2. Drive belts

3. Replace deck covers.

Replacing the Blade Drive Belts

Position machine on level surface, lower cutting unit to shop floor, engage parking brake, shut engine off and remove key from ignition switch.

Front Cutting Unit

Note: To remove center section belt, wing spindle drive belts must first be removed.

1. Remove deck covers. Lift each wing to release idler pulley tension and slip belt off pulleys.
2. Loosen jam nut and relieve tension on springs with tensioner bolt (Fig. 71).

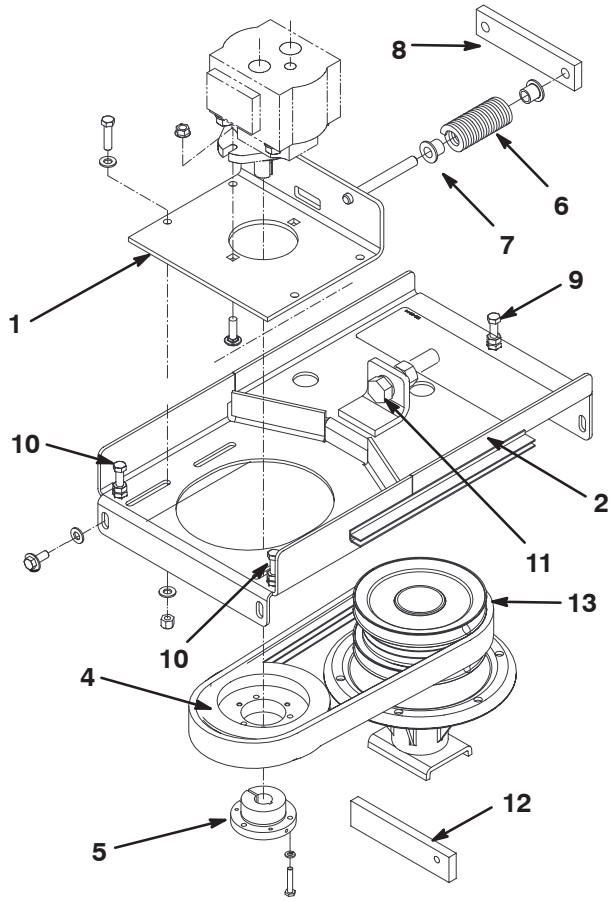

Figure 71

1. Slide plate
2. Motor mount
3. Drive motor
4. Drive pulley
5. Taper lock bushing
6. Compression spring
7. Spring holder
8. Slide bar
9. Adjusting screw (rear)
10. Adjusting screws (front)
11. Tensioner bolt
12. Height gauge
13. Center deck spindle

3. Locate and remove the adjusting screw and nut from the tool box.
4. Thread the nut onto the adjusting screw and thread the screw into the rear of the motor mount (Fig. 71).
5. Loosen the (4) capscrews securing the slide plate to the motor mount (Fig. 71).
6. Remove the (4) flangehead capscrews and washers securing the motor mount to the deck (Fig. 71).

Note: Do not loosen the adjusting screws.

7. Replace belt(s) as required. Install on pulleys as shown in figure 72.
8. Position motor mount onto deck while routing belt around drive pulley (Fig. 71). Be careful not to bend, twist, kink or damage flexible hydraulic lines.

9. Loosely secure motor mount to deck with the (4) flangehead capscrews and washers previously removed.

10. Check the drive pulley (Fig. 71) height as follows:

- Slide the height gauge (Fig. 71) under drive pulley (not under taper lock bushing).
- Equally tighten or loosen (3) adjusting screws (Fig. 71) until bottom of pulley rests flush on height gauge (approximately 1–1/2”).
- Tighten the front adjusting screw nuts to lock the adjustment. Remove the height gauge and store it in the tool box.
- Tighten the (4) flangehead capscrews and washers securing motor mount to deck.
- Remove the rear adjusting screw and nut and store them in the tool box.

11. Tighten tensioner bolt until springs are compressed to dimension shown in figure 69.

12. Tighten jam nut securing adjustment (Fig. 69).

13. Tighten (4) capscrews securing slide plate to motor mount (Fig. 69).

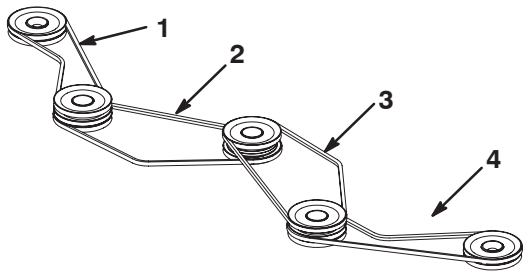

Figure 72

1. Top and middle grooves
2. Bottom grooves
3. Top grooves
4. Top and middle grooves

14. Tension the front idler pulleys (Fig. 73) as follows:

- Loosen the jam nuts on idler arm spring tension rod.
- Thread the jam nuts in or out until the tension spring length is 6.75 ± .25”.
- Tighten the jam nuts to lock the adjustment.
- Loosen the jam nuts on the idler arm stop screw.
- Thread the stop screw in or out until the distance between idler arm and stop screw head is approximately .12”
- Tighten the jam nuts to lock the adjustment.

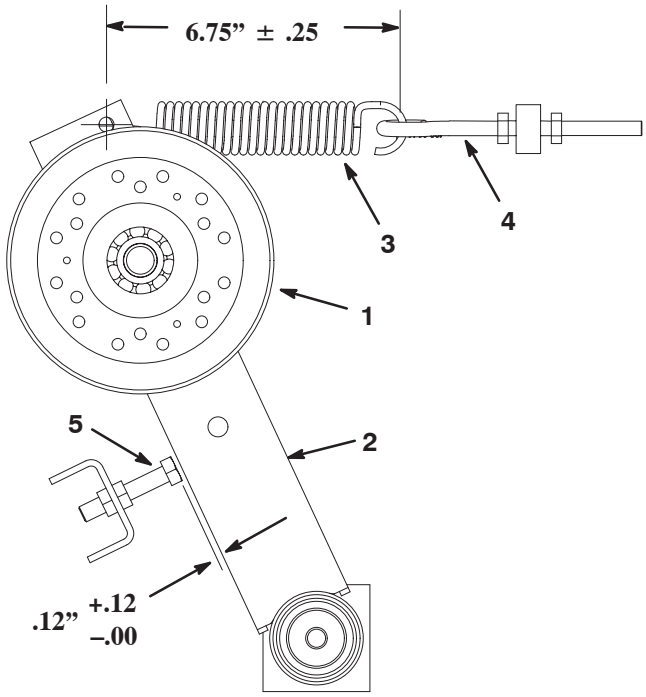

Figure 73

1. Idler pulley
2. Idler arm
3. Tension spring
4. Spring tension rod
5. Stop screw

15. Replace deck covers.

Outboard Cutting Units

Note: To remove lower belt, the other two belts must first be removed.

1. Position machine on level surface, lower cutting unit to shop floor, engage parking brake, shut engine off and remove key from ignition switch.

2. Remove deck covers. Loosen flange locknuts on idler pulleys and slide pulleys away from belts.

3. Remove flange head screws securing gearbox plate to deck. To separate plate and drive motor assembly from deck, rotate plate end toward traction unit (Fig. 70). Tip plate, motor and pulley assembly on its side and remove from deck. Be careful not to bend, twist, kink or damage flexible hydraulic lines.

4. Remove belt(s). Position new belt(s) in pulleys and assemble gear box and plate assembly to deck.

5. Adjust belt tension; refer to Inspecting and Adjusting the Cutting Unit Belt Tension, page 53.

Separating the Cutting Units from the Traction Unit

Front Cutting Unit

1. Position machine on level surface, lower cutting unit to shop floor, engage parking brake, shut engine off and remove key from ignition switch.
2. Remove deck covers.
3. Loosen jam nut and relieve tension on springs with tensioner bolt (Fig. 69).
4. Loosen (4) capscrews securing slide plate to motor mount (Fig. 71).
5. Remove (4) capscrews securing motor mount to deck (Fig. 71).

Note: Do not loosen adjusting screws.

6. Remove motor mount from deck. Be careful not to bend, twist, kink or damage flexible hydraulic lines.
7. Remove hex head screws and flange locknuts securing each lift arm to the castor arm and separate from the arm.
8. Roll the cutting unit away from the traction unit.
9. To re–install cutting unit, assemble in reverse order.

Outboard Cutting Units

1. Position machine on level surface, lower cutting unit to shop floor, engage parking brake, shut engine off and remove key from ignition switch.
2. Remove deck covers and relieve belt tension on all belts (Fig. 70).
3. Remove flange head screws securing gearbox plate to deck. To separate plate and drive motor assembly from deck, rotate plate end toward traction unit (Fig. 74). Tip plate, motor and pulley assembly on its side and remove from deck. Be careful not to bend, twist, kink or damage flexible hydraulic lines.
4. Remove locknut securing deck pivot shaft into deck clevis and lift bar (Fig. 74).
5. Move the cutting unit away from the machine.
6. To install cutting unit, assemble in reverse order.

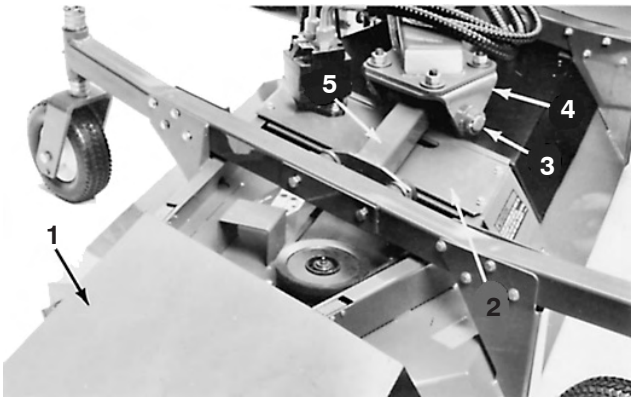

Figure 74

1. Deck cover
2. Gearbox plate
3. Deck pivot shaft
4. Deck clevis
5. Lift bar

Checking and Correcting Cutting Blade Mismatch

If there is mismatch between the blades, the grass will appear streaked when it is cut. This can be corrected by ensuring all blades are straight and cutting on the same plane.

1. Adjust cutting unit to highest height–of–cut. Position castor wheel axles in lower castor fork holes (Fig. 75 and 76). If checking front cutting unit, reposition two rear castor's clevis pins to highest height–of–cut setting (Fig. 75). On the front castors, move all castor spacers to the underside of the castor arms (Fig. 75). To check outboard units, move all castor shaft spacers to the underside of the castor arms and castor wheel axles to lower castor fork holes.

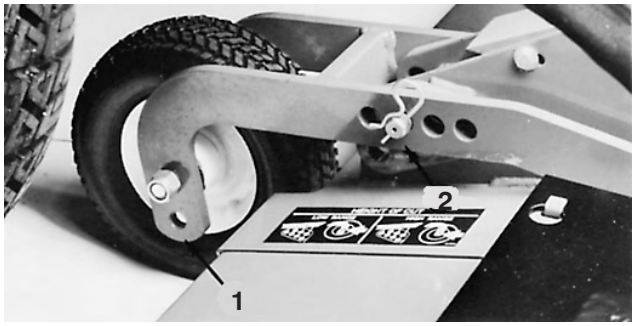

Figure 75

1. High range height-of-cut
2. Move to highest height-of-cut setting

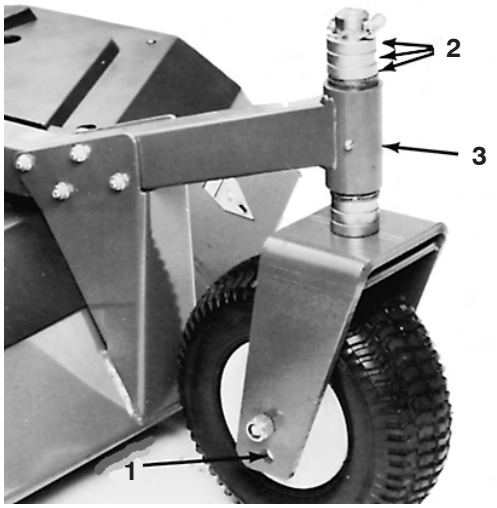

Figure 76

1. High range height-of-cut
2. Move to underside of castor arm
3. Castor arm

2. Place a flat 4 X 8 sheet of plywood at least 3/4 in. (20 mm) thick down on a level surface and lower the cutting unit onto the flat surface.

3. Rotate blade so ends face fore and aft. Measure from flat surface to front tip of cutting blade and record dimension. Rotate same blade so opposite end faces forward and repeat measurement. Difference between the two measurements must not exceed 1/8 in. (3 mm). If difference exceeds 1/8 in. (3 mm), the blade is bent. Replace it. Use same procedures to measure all blades.

4. Rotate blade so ends face fore and aft. Measure from flat surface to front of cutting blade and record dimension. Repeat process with all blades and compare measurements. Maximum difference allowed between any two adjacent blades is 1/4 in. (6 mm). Maximum difference allowed between the highest and lowest blade measurement is 3/8 in. (10 mm). If measurements do not fit recommended standards, add shims between the cutting deck and spindle housing; proceed to step 6. If measurements meet standards, proceed to step 5.

5. Rotate blades so tips line up with one another. Tips of adjacent blades must be within 1/8 in.(3 mm) of each other. If tips are not within 1/8 in. (3 mm) of one another, add shims between spindle housing and bottom of cutter deck; proceed to step 6.

6. Remove locknuts securing spindle housing to deck in area where shims are to be added. To lower a blade, add a shim (Part No. 3256–24), to each mounting bolt, between spindle housing and cutter deck. Repeat step 5. Continue process until blade tips are within the required dimensions.

Important Do not exceed three shims at any one hole location. If more than one shim is added to any one hole location, install decreased amounts of shims in adjacent holes.

Adjusting the Winglet Stabilizers

If front winglet decks bounce excessively when in transport, an adjustment to the winglet stabilizers is required.

1. Park machine on a level surface, engage parking brake, lower front deck completely to the ground and turn the engine OFF.

2. Loosen capscrews securing winglet stabilizer brackets to deck and move brackets outward (Fig. 77).

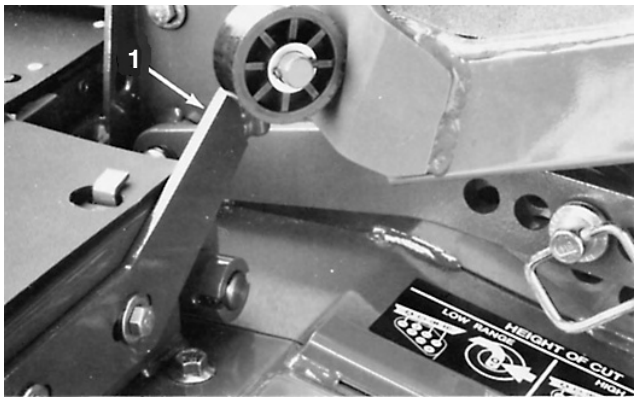

Figure 77

1. Winglet stabilizer brackets

3. Start engine and raise front deck completely, then stop engine.

4. Move stabilizer brackets inward until rollers contacts skirt of machine, then tighten capscrews locking adjustment.

Adjusting the Traction Control Rod

1. Park machine on a level surface, engage parking brake, raise wing decks completely, lower front deck to the ground and turn the engine OFF.
2. Remove cotter pin and slotted nut from ball joint at traction pedal (Fig. 78). Disconnect ball joint from traction pedal.

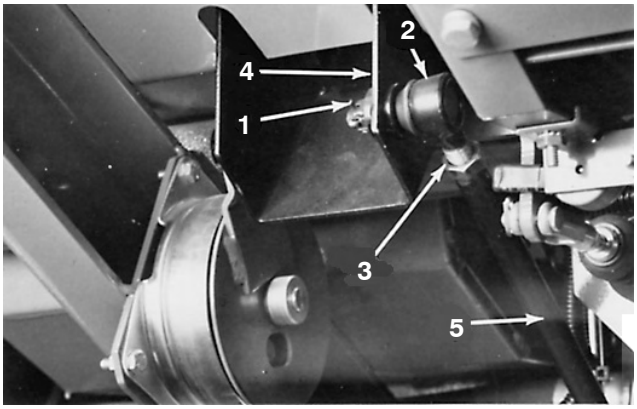

Figure 78

1. Cotter pin and slotted nut
2. Ball joint
3. Jam nut
4. Traction pedal
5. Control rod

3. Loosen jam nut and adjust ball joint so that when control rod is all the way back, front of traction pedal hits the floor. Tighten jam nut.
4. Connect ball joint to traction pedal. Tighten slotted nut until ball joint is tight against traction pedal then loosen nut until next slot aligns with hole in ball joint and install cotter pin.

Cylinder Head Bolts

Torque initially after 50 operating hours and check every 1000 operating hours or annually thereafter.

Engine Valve Clearance

Adjust initially at 50 operating hours and check every 400 operating hours or annually thereafter.

Inspect and Adjust Fuel Injection Nozzles

Check and adjust every 400 operating hours.

Electrical Schematic – Model 30582

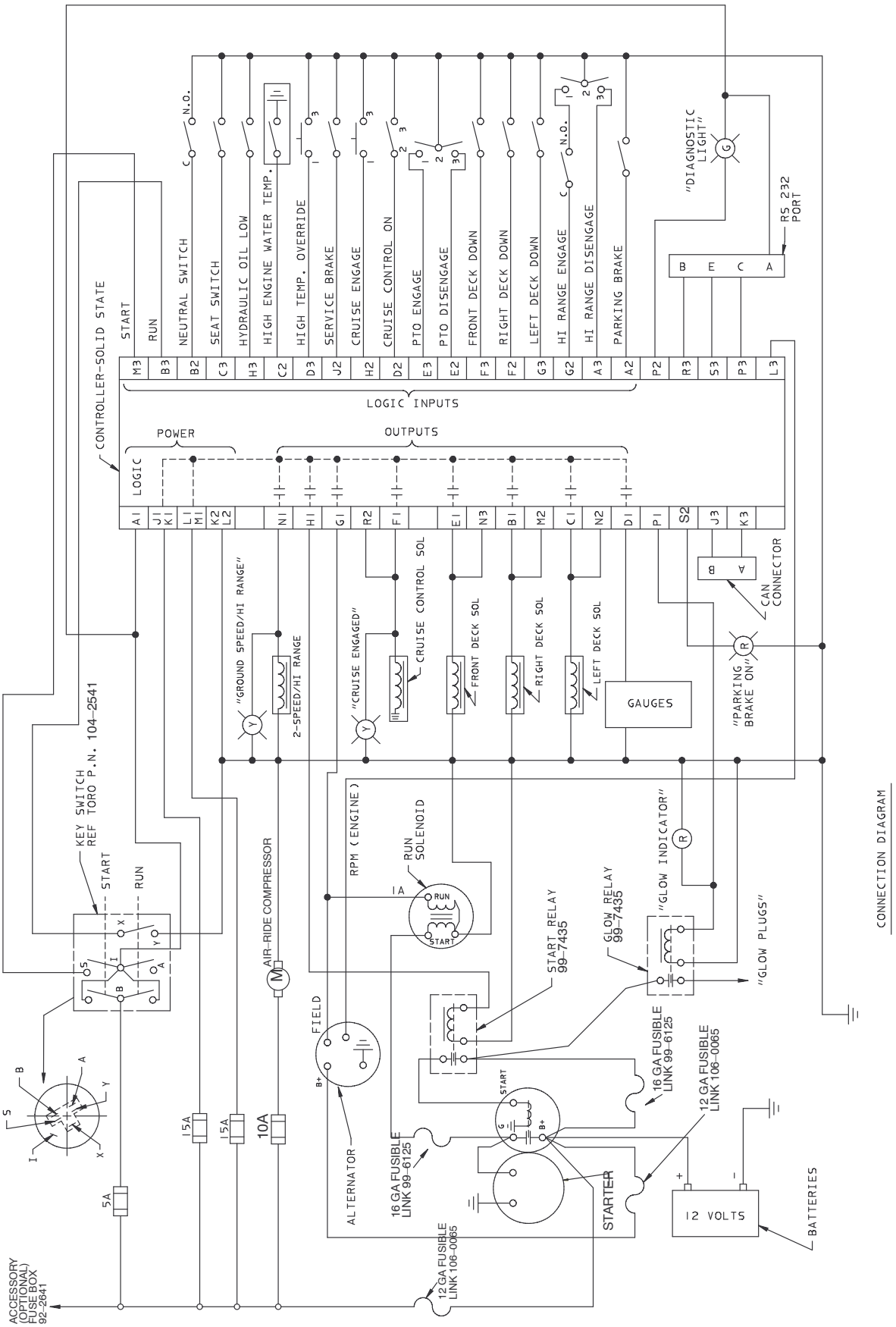

Electrical Schematic – Model 30583

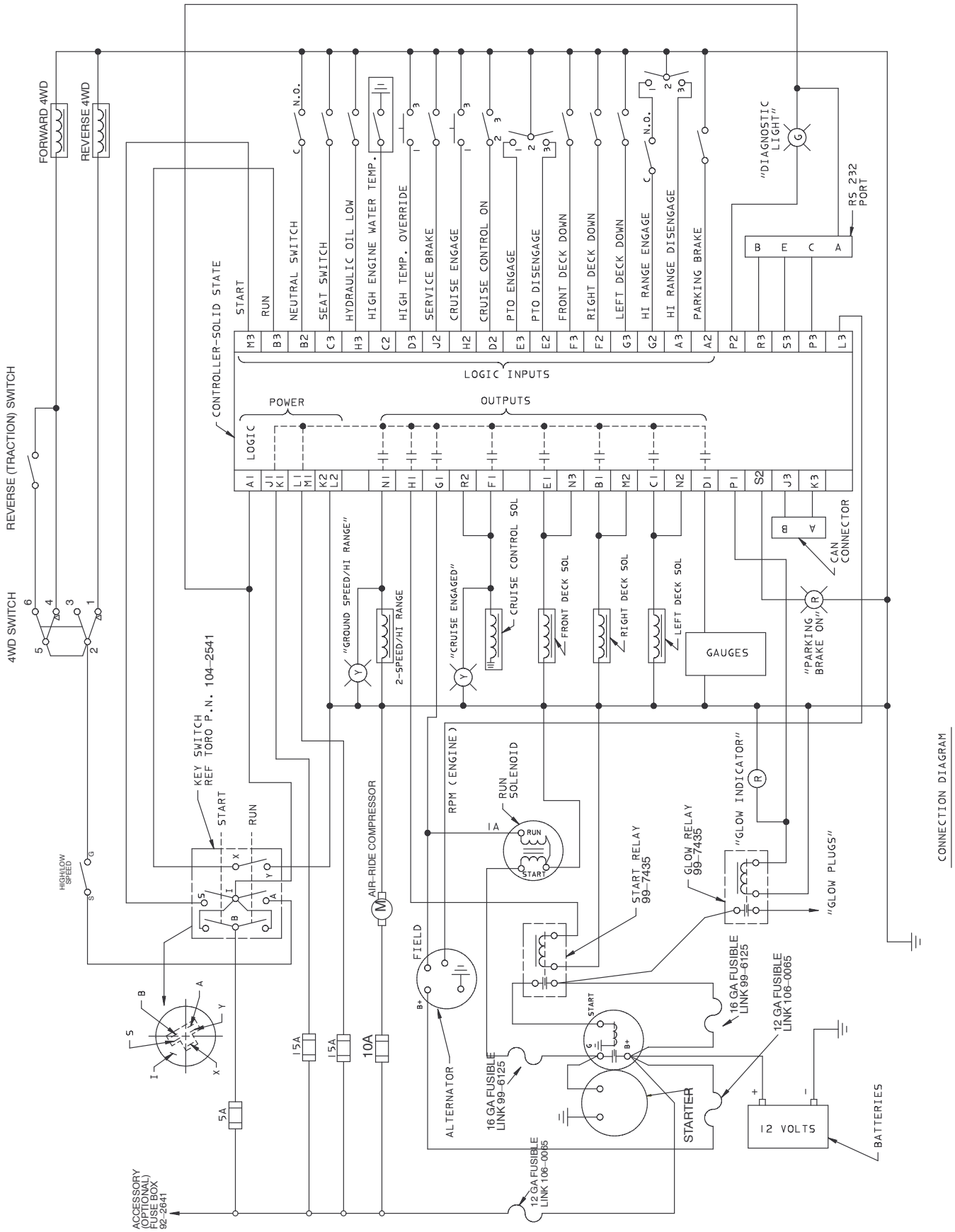

Hydraulic Schematic – Model 30582

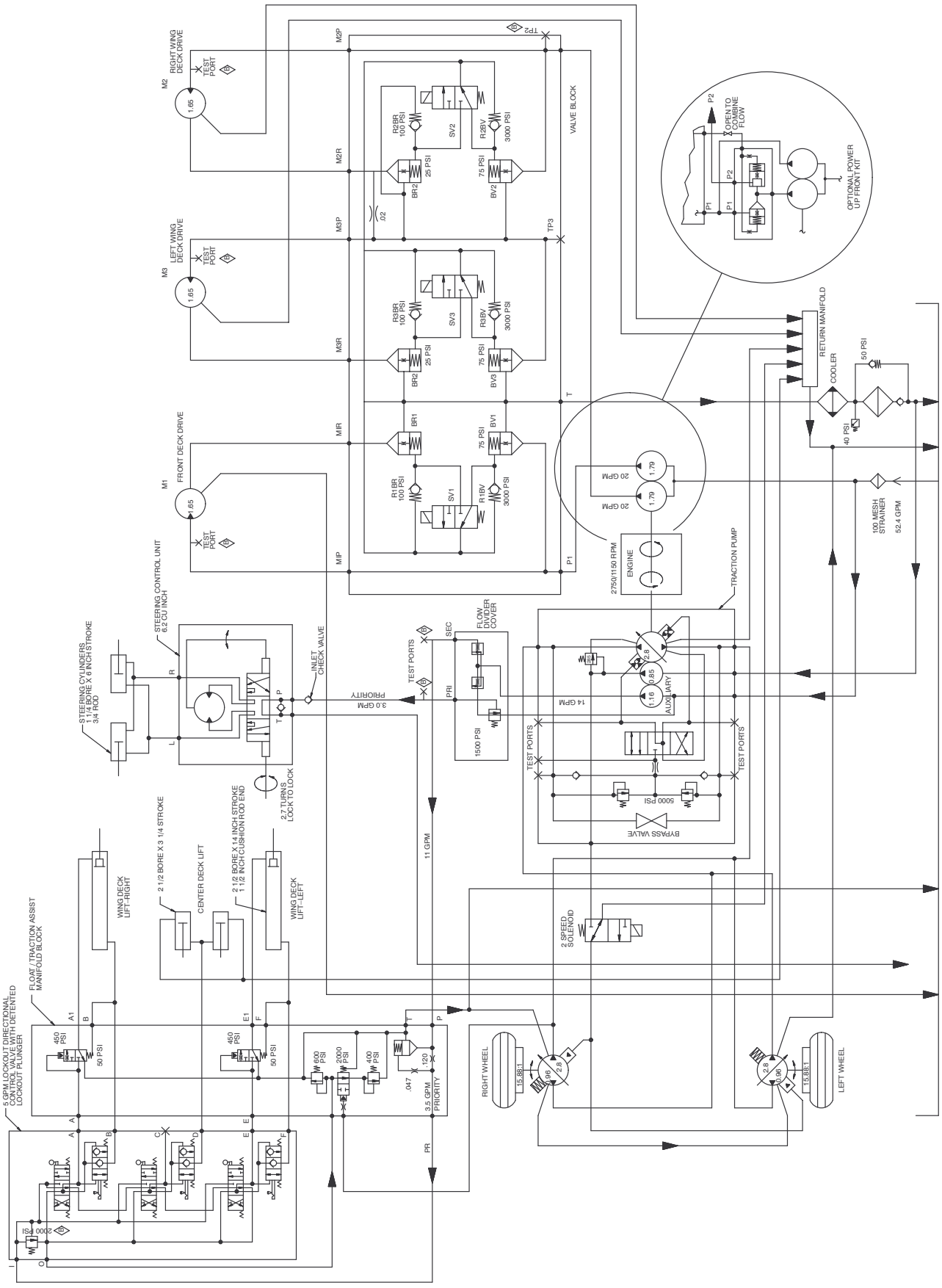

Hydraulic Schematic – Model 30583

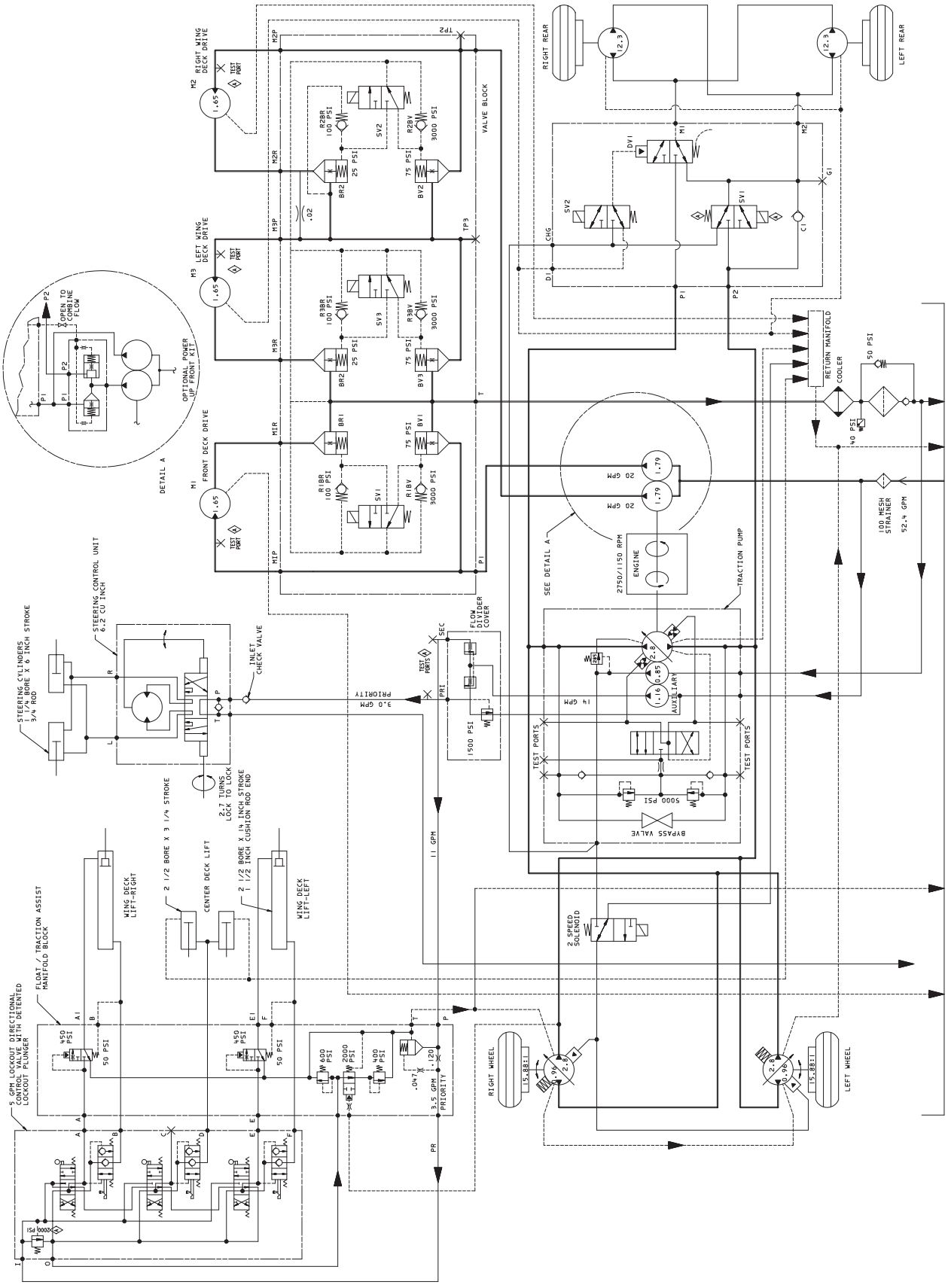

The Toro General Commercial Products Warranty

A Two-Year Limited Warranty

Conditions and Products Covered

The Toro Company and its affiliate, Toro Warranty Company, pursuant to an agreement between them, jointly warrant your Toro Commercial Product ("Product") to be free from defects in materials or workmanship for two years or 1500 operational hours*, whichever occurs first. Where a warrantable condition exists, we will repair the Product at no cost to you including diagnosis, labor, parts, and transportation. This warranty begins on the date the Product is delivered to the original retail purchaser.

* Product equipped with hour meter

Instructions for Obtaining Warranty Service

You are responsible for notifying the Commercial Products Distributor or Authorized Commercial Products Dealer from whom you purchased the Product as soon as you believe a warrantable condition exists.

If you need help locating a Commercial Products Distributor or Authorized Dealer, or if you have questions regarding your warranty rights or responsibilities, you may contact us at:

Toro Commercial Products Service Department
Toro Warranty Company
8111 Lyndale Avenue South
Bloomington, MN 55420-1196
952-888-8801 or 800-982-2740
E-mail: commercial.service@toro.com

Owner Responsibilities

As the Product owner, you are responsible for required maintenance and adjustments stated in your operator's manual. Failure to perform required maintenance and adjustments can be grounds for disallowing a warranty claim.

Items and Conditions Not Covered

Not all product failures or malfunctions that occur during the warranty period are defects in materials or workmanship. This express warranty does not cover the following:

- Product failures which result from the use of non-Toro replacement parts, or from installation and use of add-on, modified, or unapproved accessories
- Product failures which result from failure to perform required maintenance and/or adjustments
- Product failures which result from operating the Product in an abusive, negligent or reckless manner
- Parts subject to consumption through use unless found to be defective. Examples of parts which are consumed, or used up, during normal Product operation include, but are not limited to, blades, reels, bedknives, tines, spark plugs, castor wheels, tires, filters, belts, and certain sprayer components such as diaphragms, nozzles, and check valves, etc.
- Failures caused by outside influence. Items considered to be outside influence include, but are not limited to, weather, storage practices, contamination, use of unapproved coolants, lubricants, additives, or chemicals, etc.
- Normal "wear and tear" items. Normal "wear and tear" includes, but is not limited to, damage to seats due to wear or abrasion, worn painted surfaces, scratched decals or windows, etc.

Parts

Parts scheduled for replacement as required maintenance are warranted for the period of time up to the scheduled replacement time for that part.

Parts replaced under this warranty become the property of Toro. Toro will make the final decision whether to repair any existing part or assembly or replace it. Toro may use factory remanufactured parts rather than new parts for some warranty repairs.

General Conditions

Repair by an Authorized Toro Distributor or Dealer is your sole remedy under this warranty.

Neither The Toro Company nor Toro Warranty Company is liable for indirect, incidental or consequential damages in connection with the use of the Toro Products covered by this warranty, including any cost or expense of providing substitute equipment or service during reasonable periods of malfunction or non-use pending completion of repairs under this warranty. Except for the Emissions warranty referenced below, if applicable, there is no other express warranty. All implied warranties of merchantability and fitness for use are limited to the duration of this express warranty.

Some states do not allow exclusions of incidental or consequential damages, or limitations on how long an implied warranty lasts, so the above exclusions and limitations may not apply to you.

This warranty gives you specific legal rights, and you may also have other rights which vary from state to state.

Note regarding engine warranty: The Emissions Control System on your Product may be covered by a separate warranty meeting requirements established by the U.S. Environmental Protection Agency (EPA) and/or the California Air Resources Board (CARB). The hour limitations set forth above do not apply to the Emissions Control System Warranty. Refer to the Engine Emission Control Warranty Statement printed in your operator's manual or contained in the engine manufacturer's documentation for details.

Countries Other than the United States or Canada

Customers who have purchased Toro products exported from the United States or Canada should contact their Toro Distributor (Dealer) to obtain guarantee policies for your country, province, or state. If for any reason you are dissatisfied with your Distributor's service or have difficulty obtaining guarantee information, contact the Toro importer. If all other remedies fail, you may contact us at Toro Warranty Company.

Part No. 374-0031 Rev. C