FORM NO. 3315–685

TORO®

MODEL NO. 30563

PARTS CATALOG

KIT TRACTOR SHIELD

For Cutting Units Model No. 30568

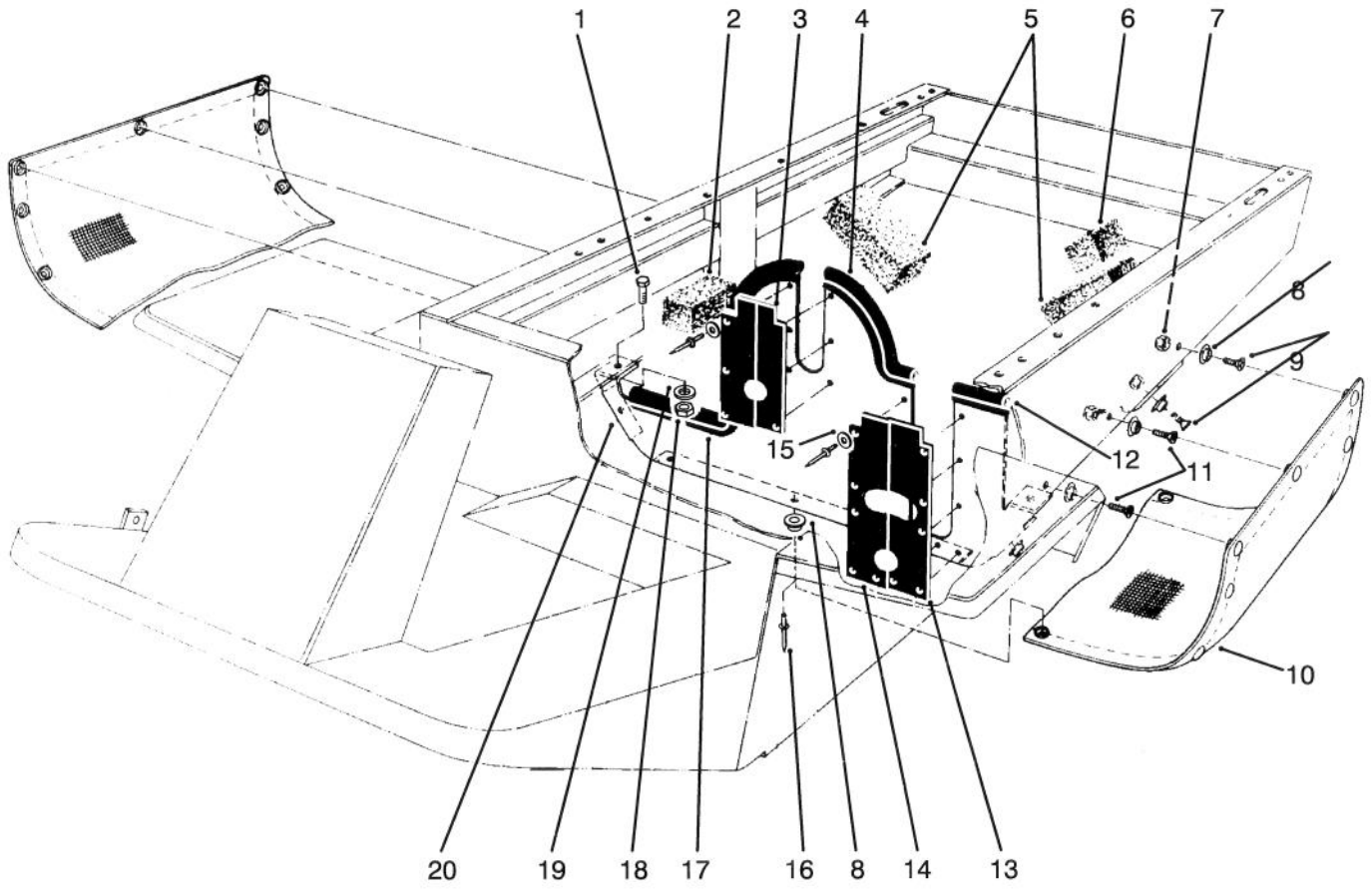

T–0705

TRACTOR SHIELD ASSEMBLY

Ref. No.	Part No.	Description	No. Used
1	323–5	Screw – Cap Hex. Hd.	2
2	46–8130	Foam – Side	2
3	46–8170	Flap – Drive Coupling	2
4	46–8200	Trim – Seal	1
5	46–8110	Foam – Rear	2
6	46–8120	Foam – Rear	1
7	3296–9	Nut – Lock	7
8	41–9060	Stud – Snap	16
9	32108–99	Screw – Flat Hd.	7
10	41–8921	Screen – Grass	1
11	32144–18	Screw – Hex. Thread Form	4
12	46–8190	Seal – Trim	1
13	46–8150	Flap – P.T.O. L.H.	1
14	46–8160	Flap – P.T.O. R.H.	1
15	5–1254	Washer	16
16	3290–55	Rivet – Pop	21
17	46–8210	Seal – Trim	1
18	3217–7	Nut	2
19	3253–29	Washer – Lock	2
20	46–8180	Front Shield Assembly (Incl. Ref. #3, 4, 8 &12–17)	1

© The TORO Company –1993
All Rights Reserved

TPS