Form Number 3360-227 Rev A

Eurocycler 41cm Electric Lawn Mower

Model No. 21092 - 280F00001 and up.

Parts Catalog

Ordering Replacement Parts

To order replacement parts, please supply the part number, the quantity, and the description of each part desired.

Understanding Reference Numbers

Each Identified part in an illustration has a reference number. The reference number for a part also appears in the parts list, along with other information about the part.

This catalog uses two special reference number formats, one to indicate parts in a service assembly and another to indicate the quantity of a given part in an illustration.

Service Assembly Reference Numbers

Parts in service assemblies have reference numbers in the form a:b. The a represents the reference number of the entire service assembly and the b represents a sequential number unique to each part within the service assembly.

For example, a wheel assembly might be identified by reference number 6, the tire by 6:1, the valve by 6:2, and the wheel by 6:3. When you order the assembly identified by reference number 6, you receive all parts identified by reference numbers 6:1, 6:2, and 6:3. However, you may also order any part individually. Reference numbers of this type appear in illustrations and in part lists.

Reference Numbers Indicating Quantity

In an illustration, if a reference number indicates more than one part, the reference number has the form nX y. The n represents the quantity of the part, the X is the multiplication symbol, and the y represents the reference number.

For example, in an illustration, the reference number 2X 37 means that two of the parts identified by reference number 37 are indicated.

© The Toro Company - 2008
All Rights Reserved

Register your product at www.Toro.com

Contents

Description	Page	Description	Page
Housing Assembly	 3	Handle Assembly	 6
Single Point Height-of-Cut Assembly	 4	Bagging Assembly	 7
Motor and Blade Assembly	 5	Attachments and Accessories List	 8

Part Description Abbreviations

Part descriptions in this catalog may include the following abbreviations.

AR. . . . . as required
ASM. . . . . assembly
BBC. . . . . blade brake clutch
CARR. . . . . carriage
DEG. . . . . degrees
EXT. . . . . external
FH. . . . . flat head
GA. . . . . gauge
HD. . . . . heavy-duty
HF. . . . . hex flange
HH. . . . . hex head
HHF. . . . . hex head flange
HHFTF. . . . . hex head flange thread forming
HJ. . . . . hex jam
HLH. . . . . hex lag head
HOC. . . . . height-of-cut
HSBH. . . . . hex socket button head
HSFH. . . . . hex socket flat head
HSH. . . . . hex socket head
HWH. . . . . hex washer head
HWHTF. . . . . hex washer head thread forming
HYD. . . . . hydraulic
LH. . . . . left hand
NI. . . . . nylon insert
NPTF. . . . . national pipe thread fine
PFH. . . . . phillips flat head
PPH. . . . . phillips pan head
PPHTF. . . . . phillips pan head thread forming
PRH. . . . . phillips round head
PTH. . . . . phillips truss head
PTO. . . . . power-take-off
RH. . . . . right hand
ROPS. . . . . roll-over protection system
SFH. . . . . slotted fillister head
SHH. . . . . slotted hex head
SHWH. . . . . slotted hex washer head
SPH. . . . . slotted pan head
SQH. . . . . square head
SRH. . . . . slotted round head
STD. . . . . standard
TAP. . . . . self tapping
TTH. . . . . torx truss head

Footnotes

❶ Not illustrated

❷ Not serviced separately

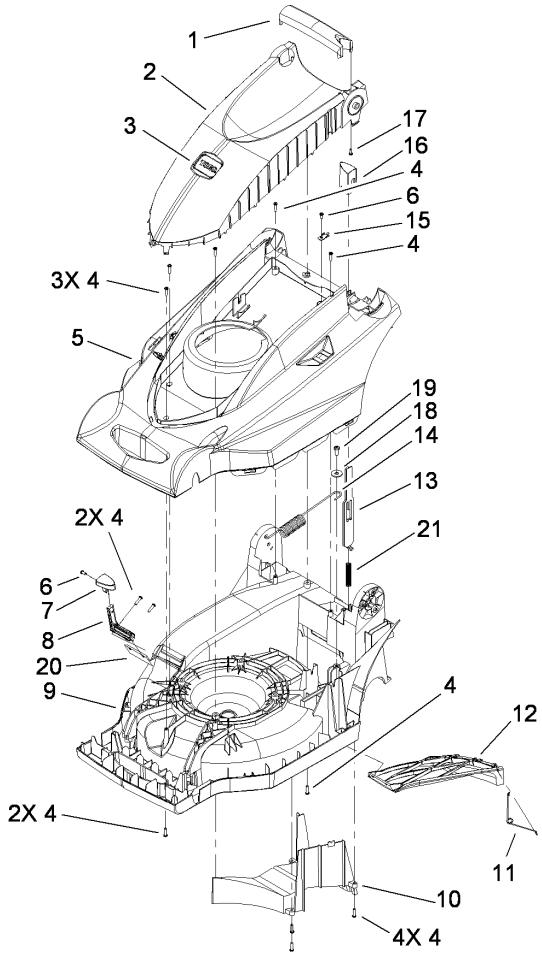

Housing Assembly

Ref	Part No.	Qty.	Description
1	110-1135	1	Handle-Lift
2	110-1134	1	Cover-Motor
3	110-1136	1	Decal
4	110-1271	14	Screw-Torx, Pan Head
5	112-3921	1	Deck-Upper
6	110-1269	2	Screw-Torx, Pan Head
7	110-1131	1	Knob-Rod
8	110-1104	1	Clamp-Door
9	112-3920	1	Deck-Lower
10	110-1105	1	Baffle-Chamber, Insert
11	110-1103	1	Spring-Torsion
12	110-1102	1	Door-Recycle
13	110-1118	1	Plate-HOC
14	110-1119	1	Spring-Extension
15	110-1132	1	Clamp-Cable
16	110-1116	1	Knob-HOC
17	110-8438	4	Screw-Torx, Flanged Head
18	110-8447	1	Washer-Din
19	110-1273	1	Screw-Torx, Pan Head
20	110-8442	1	Shim-Clamp
21	110-1117	1	Spring-Compression

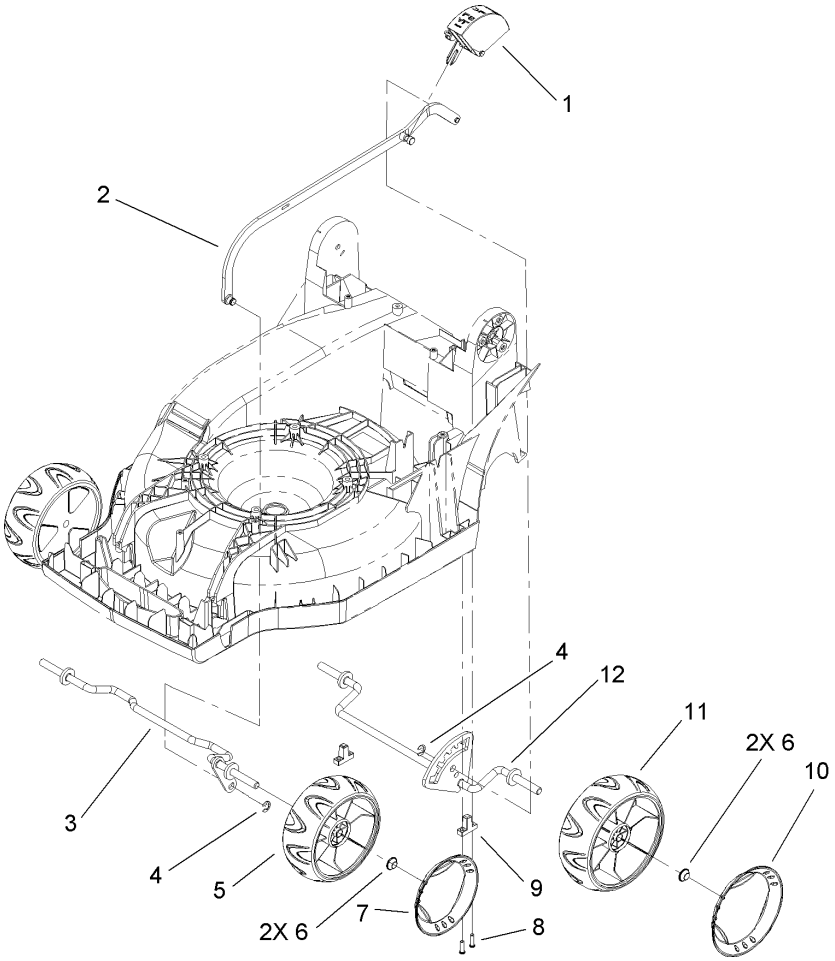

Single Point Height-of-Cut Assembly

Ref	Part No.	Qty.	Description
1	110-8420	1	Indicator-Height Of Cut
2	110-1253	1	Axle Link ASM
3	110-1107	1	Front Axle ASM
4	110-1266	2	E-Clip-Din, 8Mm
5	110-1148	2	Tire ASM
6	110-1278	4	Cap-Starlock, Push
7	110-1149	2	Cover-Wheel
8	110-1271	4	Screw-Torx, Pan Head
9	110-1216	2	Clamp-Axle, Rear
10	110-1145	2	Cover-Wheel
11	110-1144	2	Tire ASM
12	110-1111	1	Rear Axle ASM

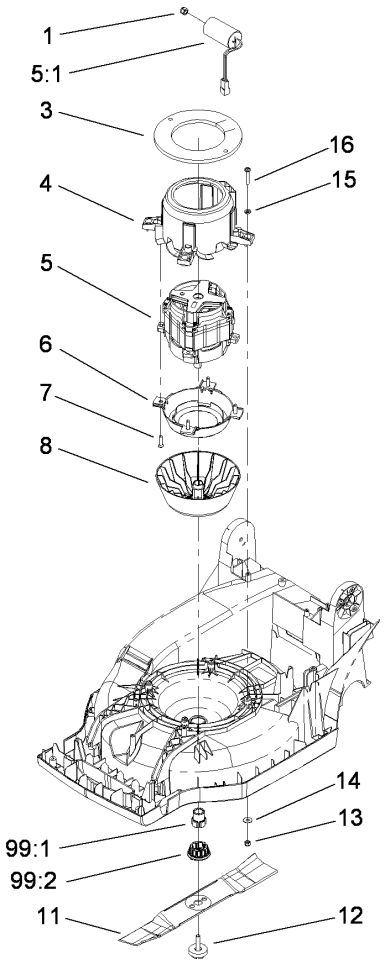

Motor and Blade Assembly

Ref	Part No.	Qty.	Description
1	110-1275	1	Nut-Hex, Nyloc
3	110-1130	1	Gasket-Rubber, Motor
4	114-5386	1	Case-Motor, Upper
5	112-3930	1	Motor-1400W
5:1	110-1126	1	Capacitor-Motor
6	110-1122	1	Case-Motor, Lower
7	110-1272	4	Screw-PFH, Countersink
8	115-3105	1	Fan-Motor
11	110-8408	1	Blade-41 Cm
12	110-8459	1	Bolt-Mount, Blade
13	110-8451	4	Nut-Hex, Nyloc
14	115-3106	4	Washer-Flat
15	110-8450	4	Washer
16	110-8449	4	Screw-PPH
❶❷99		1	Adapter ASM
99:1	114-5388	1	Adapter-Blade
99:2	115-3101	1	Adapter-Mount, Blade

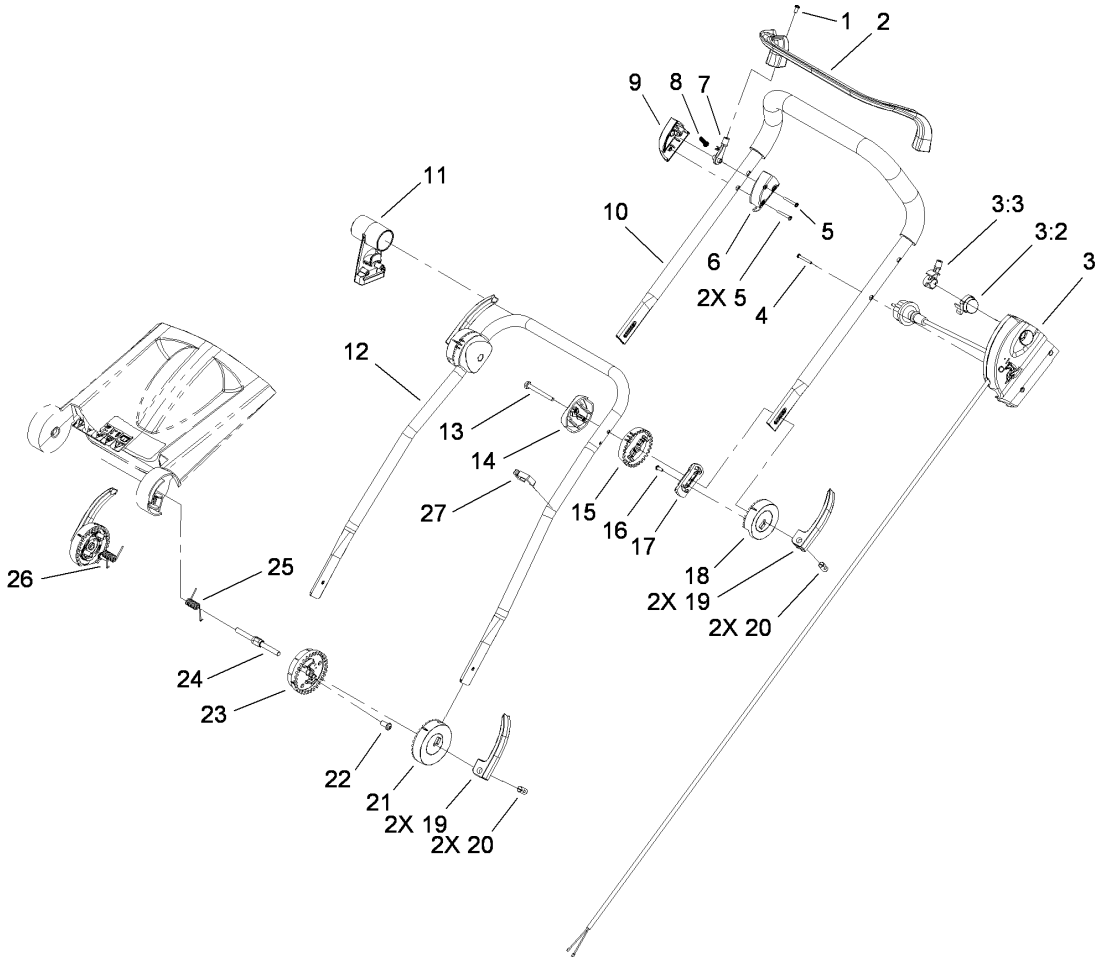

Handle Assembly

Ref	Part No.	Qty.	Description
1	110-1269	2	Screw-Torx, Pan Head
2	110-1176	1	Bail-Control
3	110-8402	1	Switch ASM
3:2	110-1169	1	Button-Switch
3:3	110-1170	1	Pivot-Mount, Arm
4	110-1268	2	Screw-Torx, Pan Head
5	110-1268	3	Screw-Torx, Pan Head
6	110-1165	1	Housing-Pivot, LH
7	110-1164	1	Pivot-Mount, Arm
8	110-1166	1	Spring-Compression
9	110-1163	1	Housing-Pivot, RH
10	110-1159	1	Upper Handle ASM
11	110-1178	1	Hanger-Cable, Tube
12	110-1154	1	Tube-Handle, Lower
13	110-1263	2	Bolt-Mounting, Handle
14	110-1156	2	Clamp-Handle
15	110-1157	2	Mount-Handle, Ratchet
16	110-8438	8	Screw-Torx, Flanged Head
17	110-8404	2	Plate-Midpoint, Adjust Handle
18	110-1177	2	Adapter-Handle, Ratchet
19	112-3924	4	Lever-Locking, Handle
20	110-1180	4	Pivot-Pin, Threaded
21	110-1155	2	Adapter-Handle, Ratchet
22	110-1273	6	Screw-Torx, Pan Head

Ref	Part No.	Qty.	Description
23	112-3922	2	Mount-Handle Ratchet
24	110-1138	2	Spindle-Bolt, Handle
25	110-1141	1	Spring-Torsion, LH
26	110-1140	1	Spring-Torsion, RH
27	110-8439	1	Guide-Cable

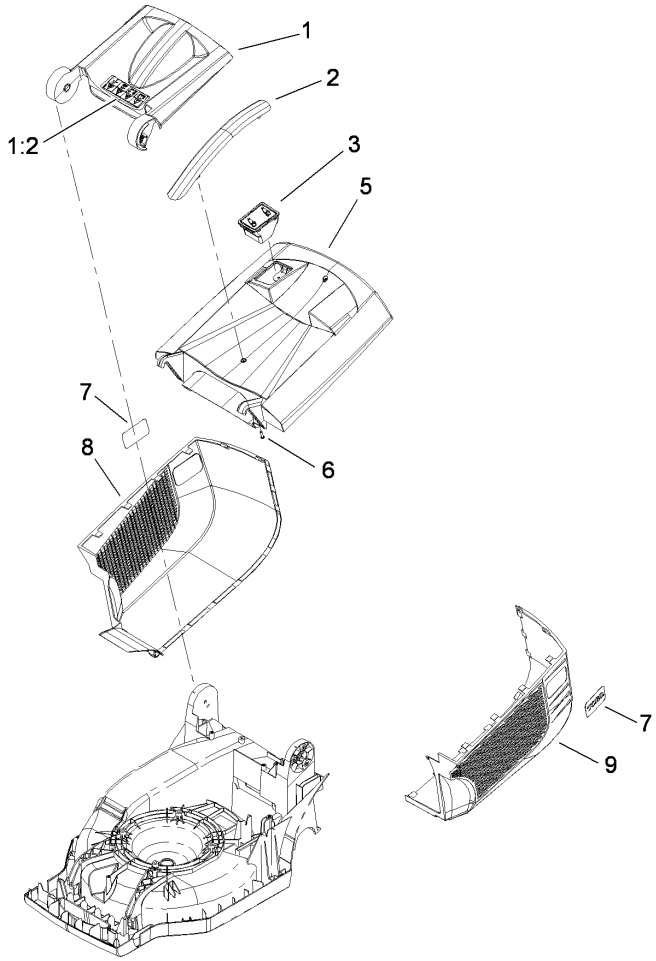

Bagging Assembly

Ref	Part No.	Qty.	Description
1	112-3932	1	Door W/Decal ASM
1:2	110-8417	1	Decal-Warning
2	110-1184	1	Handle-Grassbox
3	110-1187	1	Indicator ASM
5	110-1182	1	Housing-Grassbox, Top
6	110-1271	3	Screw-Torx, Pan Head
7	110-1186	2	Decal-Panel
8	110-1185	1	Housing-Grassbox, RH
9	110-1183	1	Housing-Grassbox, LH

Attachments and Accessories

For 21092 - Eurocycler 41cm Electric Lawn Mower

Product Name	Model/Part
Rear Roller Kit	21094

NOTES

NOTES

NOTES


TORO®