Form No. 3360-228 Rev A

Eurocycler™ 34cm Lawn Mower

Model No. 21083—Serial No. 280G00001 and Up

Operator's Manual

Introduction

This lawn mower has been designed for private use on residential property only. It is not to be used for commercial purposes on public property.

Thank you for choosing a Toro electric mower for residential use. Read this manual carefully to learn how to operate and maintain your mower properly. The information in this manual can help you and others avoid injury and product damage. Although Toro designs and produces safe products, you are responsible for operating the product properly and safely.

Regulations on the operation of mowers vary from one area to another. Consult with local authorities for regulations and restrictions regarding permitted mowing times in your area.

Safety

Read and understand the contents of this manual before starting the motor.

⚠This is the safety alert symbol. It is used to alert you to potential personal injury hazards. Obey all safety messages that follow this symbol to avoid possible injury or death.

Improperly using or maintaining this lawn mower could result in injury or death. To reduce this potential, comply with the following safety instructions.

⚠

To reduce the risk of fire, electric shock, and personal injury when using this electric lawn mower, always follow these safety instructions.

The following safety information has been adapted from European Standard EN 836:1997 and CEI/IEC 60335-77:2001 and from AS2657-1985 and AS60335-1:2002.

Safe Operating Practices

General Information

- Read the instructions carefully. Be familiar with the controls and the proper use of the equipment.
- This appliance is not intended for use by young children or infirm persons unless they have been adequately supervised by a responsible person to ensure they can use the appliance safely.
- Young children should be supervised to ensure that they do not play with the appliance.
- Never mow while people, especially children or pets, are nearby.
- The operator or user is responsible for accidents or hazards occurring to other people or their property.

Preparation

- While mowing, always wear substantial footwear and long trousers. Do not operate the equipment when barefoot or wearing open sandals.
- Thoroughly inspect the area where the equipment is to be used and remove all objects which can be thrown by the machine.
- Before using, always visually inspect to see that the blade, blade bolts, and cutter assembly are not worn or damaged. Replace a worn or damaged blade and bolts as a set to preserve balance.
- Toro recommends that the mower should be supplied with a residual current device (RCD) having a tripping current of not more than 30 mA.
- Use only 1.00 mm^2 size extension cord no more than 30 m long suitable for outdoor use (if applicable).

Handling

- Mow only in daylight or in good artificial light.
- Never use an electrically powered lawn mower in the rain or when the grass is wet.
- We recommend that you wear suitable eye protection when operating a lawn mower.
- Avoid operating the equipment in wet grass, where feasible.
- Always be sure of your footing on slopes.

© 2008—The Toro® Company
8111 Lyndale Avenue South
Bloomington, MN 55420

Register at www.Toro.com.

Original Instructions (EN)
Printed in Hungary
All Rights Reserved

- Walk; never run.
- For wheeled rotary mowers, mow across the face of slopes, never up and down.
- Exercise extreme caution when changing direction on slopes.
- Do not mow excessively steep slopes.
- Use extreme caution when reversing or pulling the lawn mower toward you.
- Stop the blade if the lawn mower has to be tilted for transportation when crossing surfaces other then grass, and when transporting the lawn mower to and from the area to be mowed.
- Never operate the lawn mower with defective guards or without safety devices (for example, deflectors and/or grass catchers) in place.
- Switch on the motor carefully according to instructions and with feet well away from the blade.
- Do not tilt the lawn mower when switching on the motor, except if the lawn mower has to be tilted for starting. In this case, do not tilt it more than absolutely necessary and lift only the part which is away from the operator. Always ensure that both hands are in the operating position before returning the appliance to the ground.
- Do not put hands or feet near or under rotating parts. Keep clear of the discharge opening at all times.
- Never pick up or carry a lawn mower while the motor is running.
- Pull the plug from the socket:
  - whenever you leave the lawn mower;
  - before clearing a blockage;
  - before checking, cleaning, or working on the lawn mower;
  - after striking a foreign object. Inspect the lawn mower for damage and make repairs before restarting and operating the lawn mower;
  - if the lawn mower starts to vibrate abnormally (check immediately).

Maintenance and Storage

- Keep all nuts, bolts, and screws tight to be sure the equipment is in safe working condition.
- Check the grass catcher frequently for wear or deterioration.
- Replace worn or damaged parts for safety.
- Ensure that only the proper replacement cutting blade is used.
- Purchase only genuine Toro replacement parts and accessories.

Safety and Instructional Decals

Important: Safety and instruction decals are located near areas of potential danger. Replace damaged or lost decals.

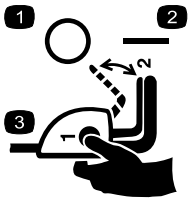

110-1168

1. Off
2. On
3. To engage the mower, press and hold the button while pulling back on the control bar.



110-8417

1. Warning—read the *Operator's Manual.*
2. Thrown object hazard—keep bystanders a safe distance from the machine.
3. Attention, do not touch rotating blade! Disconnect power cord and read the instructions before servicing or performing maintenance.
4. Electric shock hazard—keep the machine out of the rain and other wet conditions.
5. Electrical hazard, cutting of electrical cord—do not push the machine over the power cord.

Setup

Note: Do not connect the mower to a power source until the mower is fully assembled.

1. Unfolding the Handle

Procedure

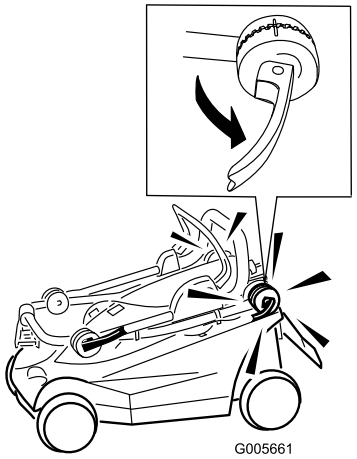

Figure 1

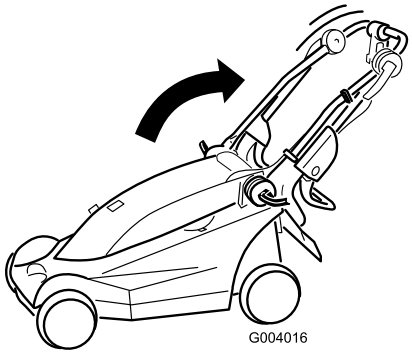

Figure 2

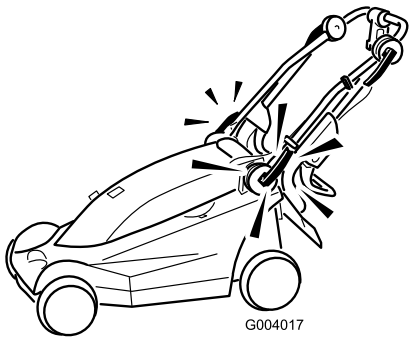

Figure 3

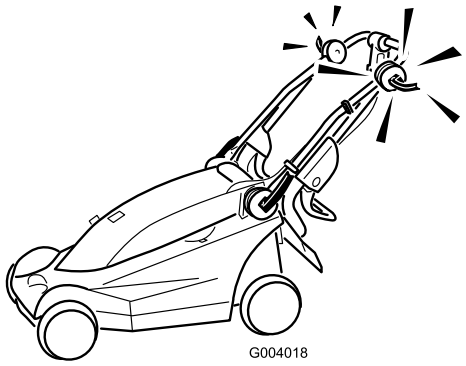

Figure 4

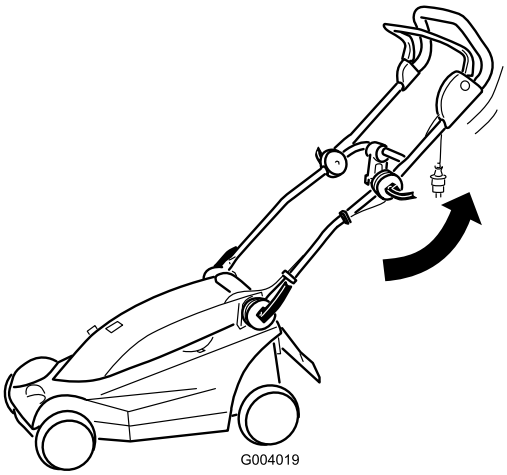

Figure 5

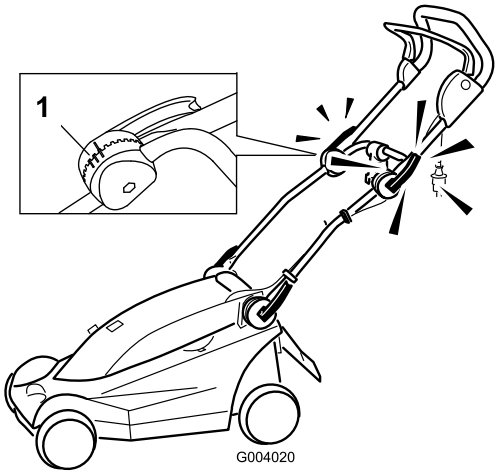

Figure 6

1. Marks for handle positions

Note: You can set the upper handle to 1 of 3 positions. Line up the mark to 1 of the 3 marks on the inner side of the upper handle lock (Figure 6).

2. Assembling the Grass Box

1	Grass box top
2	Grass box side

Procedure

Important: Follow the steps in the order shown.

1. Slide the side into the latches in the top (Figure 7).

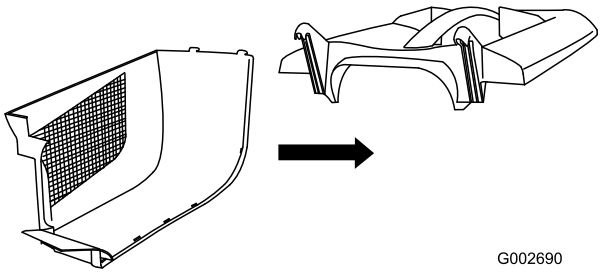

Figure 7

2. Slide the other side into the latches in the top and latch the rear of the 2 sides together (Figure 8).

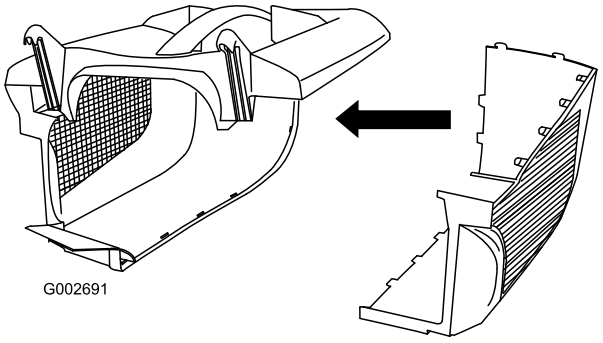

Figure 8

3. Starting at the rear, align and push the remainder of the side latches together (Figure 9).

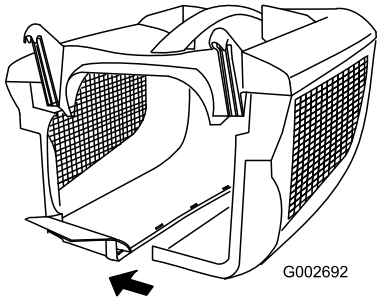

Figure 9

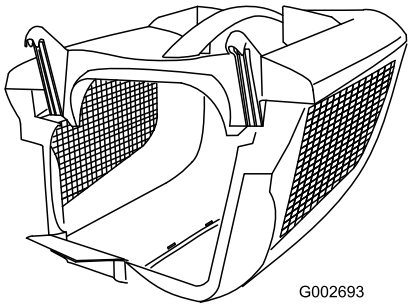

Figure 10

Product Overview

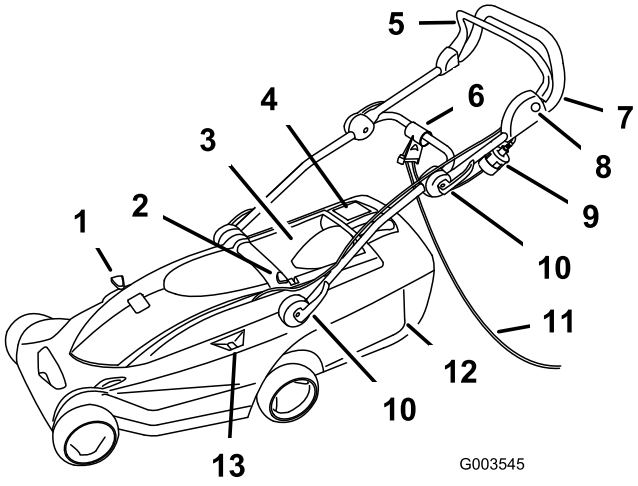

Figure 11

1. Recycling/bagging lever
2. Height-of-cut adjustment button
3. Rear door
4. Grass box fill indicator
5. Control bar
6. Cord lock
7. Handle
8. Button
9. Plug
10. Handle locks (4)
11. Extension cord (not supplied)
12. Grass box
13. Height-of-cut level reading

Specifications

Model	**21083**
Weight	16 kg
Length	137 cm
Width	39 cm
Nominal Width of cut	34 cm
Nominal Height-of-cut range	20 to 75 mm
Grass box volume	32 L
Nominal Motor RPM	3000 rpm
Voltage/ frequency	240V / 50 Hz

Operation

Securing the Extension Cord

Note: This procedure is for mowers that require an extension cord.

Use only an extension cord recommended for outdoor use.

Contacting water while operating the mower could cause an electric shock, which can cause an injury or death.

- **Don't handle the plug or the mower with wet hands or while standing in water.**
- **Use only an extension cord recommended for outdoor cold weather use.**

1. Form a loop in the extension cord and secure it in the cord lock (Figure 12).

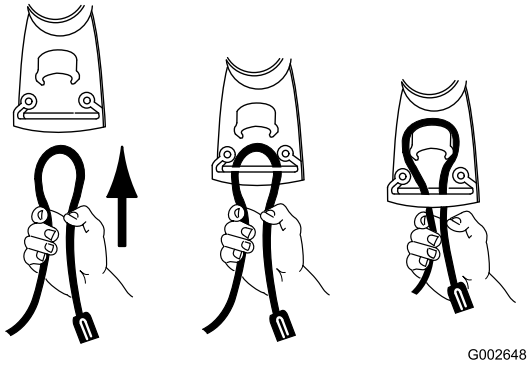

Figure 12

2. Connect the extension cord to the mower plug (Figure 13).

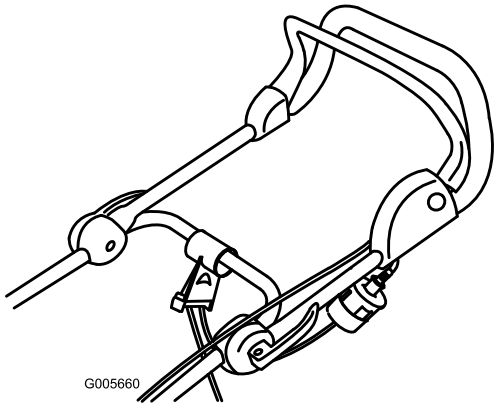

Figure 13

Note: Do not unplug the extension cord by pulling on the cord; to unplug the cord, grasp the plug, not the cord.

The electrical cord could be damaged, causing a shock or fire.

Thoroughly inspect the electrical cord before using the mower. If the cord is damaged, do not operate the mower. Have an Authorized Toro Service Dealer replace or repair a damaged cord immediately.

Planning Your Mowing Pattern

Following the suggested mowing pattern will reduce the risk of running over the cord with the mower, and the cord will not sustain unnecessary wear. Do not allow the power cord to wrap around trees, shrubs, or other obstacles.

Begin by mowing near the electrical power source. Mow back and forth, gradually mowing away from the power source (Figure 14).

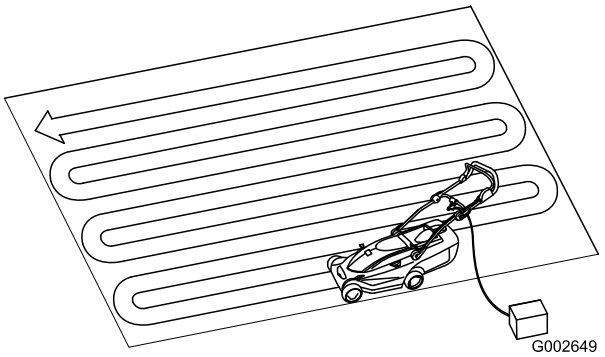

Figure 14

Starting the Motor

1. Connect the extension cord to the mower (if applicable).
2. Plug the other end of the cord into a normal household electrical power outlet.
3. Push the button on the left side of the handle and hold it in (Figure 15).

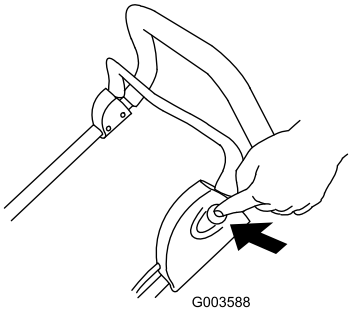

Figure 15

4. While holding in the button, pull the control bar toward the handle (Figure 16).

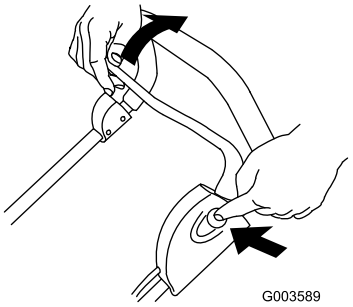

Figure 16

5. Hold the control bar to the handle and release the button (Figure 17).

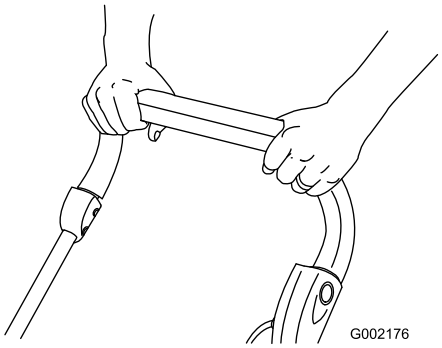

Figure 17

Stopping the Motor

1. Release the control bar (Figure 18).

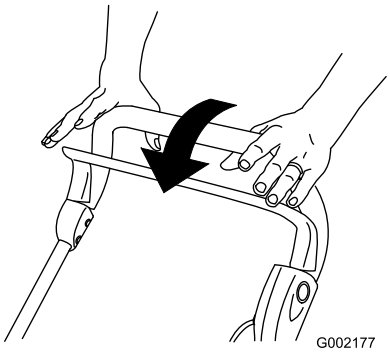

Figure 18

2. Disconnect the mower from the power source if you leave the mower unattended.

Adjusting the Height-of-Cut

The mower has 6 height-of-cut positions (all heights are approximate): A=20 mm; B=31 mm; C=42 mm; D=53 mm; E=64 mm; and F=75 mm.

Adjusting the cutting height levers could bring your hands and feet into contact with a moving blade and result in serious injury.

Stop the motor and wait for all moving parts to stop before changing the height-of-cut setting.

1. Stop the motor and wait for all moving parts to stop.
2. Press down on the height-of-cut adjustment button with your thumb and push down or lift up the height-of-cut handle to the desired cutting height setting shown on the height-of-cut level reading (Figure 19).

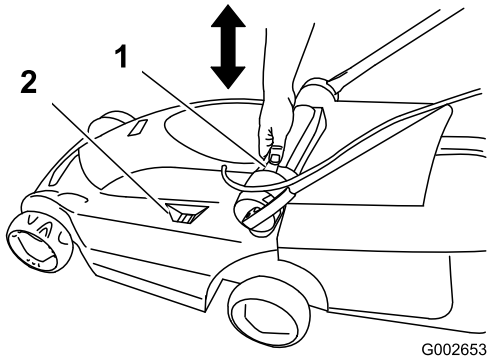

Figure 19

1. Height-of-cut adjustment button
2. Height-of-cut level reading

3. Release the height-of-cut adjustment button.

Bagging the Clippings

Install the grass box to collect the clippings.

1. Lift up the rear door and install the grass box on the mower (Figure 20).

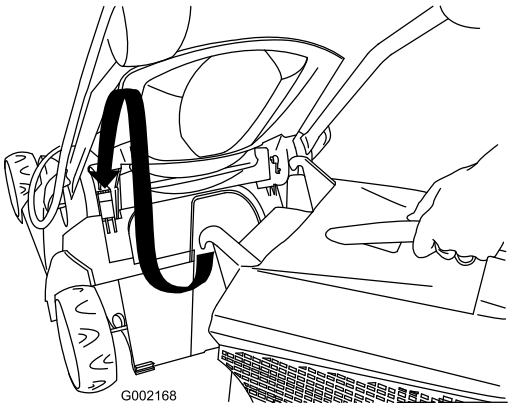

Figure 20

2. Release the rear door.
3. Move the recycling/bagging lever to bagging mode (Figure 21).

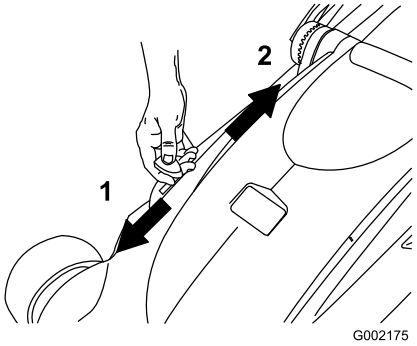

Figure 21

1. Bagging mode
2. Recycling (mulching) mode
3. Recycling/bagging lever

4. Mow with the grass box attached until the grass box indicator shows that the grass box is full (Figure 22).

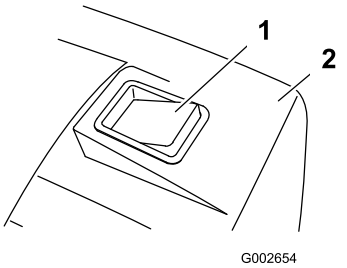

Figure 22

1. Grass box indicator (grass box is full)
2. Grass box

5. Remove the grass box from the mower and empty the contents.

Note: To convert from bagging to recycling, move the recycling/bagging lever to recycling mode (Figure 21) and remove the grass box.

Mowing Tips



Figure 23

Follow these instruction whether cutting grass or leaves for the best cutting results and lawn appearance.

- Maintain a **sharp blade** throughout the mowing season.
- **Only mow dry grass.** Wet grass tends to clump on the yard and may cause the mower to plug up or the motor to stall. They may also be slippery to walk on and could cause you to slip and fall.
- When cutting very tall grass, you may want to first mow at the highest height-of-cut setting and a slower walking speed; then mow again at a lower setting for best lawn appearance.
- If the finished cut lawn appearance is unsatisfactory, try one or more of the following:
  - Sharpen the blade.
  - Walk at a slower pace while mowing.
  - Raise the height-of-cut setting on your mower.
  - Cut the grass more frequently.
  - Overlap cutting swaths instead of cutting a full swath with each pass.

Maintenance

Toro has designed this product to give you years of trouble-free use. Should it need service, bring the product to an Authorized Toro Service Dealer.

When the mower is connected to a normal household power source, the mower is operational. Someone could accidentally start the mower and cause a serious injury to you or other bystanders.

Always disconnect the mower from the power source when you leave the mower unattended.

Double-insulated Appliances

In a double-insulated appliance, two systems of insulation are provided instead of grounding. No grounding means is provided on a double-insulated appliance, nor should a means for grounding be added to the appliance. Servicing a double-insulated appliance requires extreme care and knowledge of the system, and should be done only by the qualified service personnel at an Authorized Toro Service Dealer. Replacement parts for a double-insulated appliance must be identical to the parts they replace. A double-insulated appliance is marked with the words "Double Insulation" or "Double Insulated." The symbol (square within a square) ⧈ may also be marked on the appliance.

Cleaning the Mower Housing

After each use, clean the mower housing.

Before cleaning, stop the motor, wait for all moving parts to stop, and disconnect the mower from the power source.

Important: Do not clean the mower with water. Moisture can get trapped in the mower and may cause corrosion of internal parts.

- Clean the underside of the mower housing. Remove dirt and grass clippings with a hardwood scraper.
- Remove the debris from the housing vents along the top of the mower.
- Brush all the debris off the mower housing.
- Inspect the power plug receptacle for signs of melting or heating. Old worn-out extension cord plugs that fit loosely in the plug receptacle can cause overheating from poor contact. Replace any

damaged extension cords immediately (if applicable)
.

Servicing the Blade

Always mow with a sharp blade. As sharp blade cuts the grass evenly, without tearing or shredding the grass.

When you replace the blade, use only geniune Toro replacement blades.

Someone could accidentally start the motor and cause a serious injury to the operator or to bystanders.

Do not attempt to inspect, remove, or replace the blade without first disconnecting the mower from the power source.

1. Stop the motor and wait for all moving parts to stop.
2. Disconnect the mower from the electrical power source.
3. Tip the mower onto its side.
4. Carefully examine the blade for sharpness and wear, especially where the flat and curved parts of the blade meet. If you notice wear, replace the blade.

   Note: For best performance, install a new blade before the mowing season begins. During the season, file down small nicks on the blade to maintain its cutting edge.

A worn or damaged blade could break and a piece of blade could be thrown in the operator's or bystander's direction, causing serious personal injury or death.

Inspect the blade periodically for wear or damage, and replace a worn or damaged blade.

Removing the Blade

1. Grasp the end of the blade (Figure 24) with a rag or thickly padded glove.

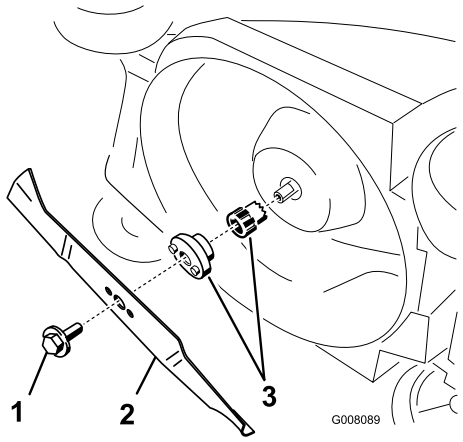

Figure 24

1. Blade bolt
2. Blade
3. Blade adapter

2. Remove the blade bolt and the blade.

   Important: If the blade adapter comes off, ensure that you install it before installing the blade and blade bolt. Operating the mower without the blade adapter will damage the mower.

Sharpening the Blade

Use a file to sharpen the top side of the blade and maintain the original cutting angle.

Note: The blade will remain balanced if you remove the same amount of material from both cutting edges.

Important: Check the balance of the blade by putting it on a blade balancer. You can purchase an inexpensive balancer at a hardware store. A balanced blade stays in a horizontal position; an unbalanced blade settles to the heavy side. If the blade is not balanced, file more metal off the cutting edge on the heavy end of the blade.

Installing the Blade

Install a sharp, balanced blade and the blade bolt. The sail part of the blade must point toward the top of the mower housing to ensure correct installation. Tighten the blade bolt to 15 N-m.

Servicing the On/Off and Blade Brake System

The motor and blade are designed to stop within 3 seconds after you release the control bar. Ensure that the control bar functions properly each time before you operate the mower. If the blade does not stop within 3 seconds or there is a grinding or scraping, metal-to-metal noise when you release the control bar, contact an Authorized Toro Service Dealer.

Storage

Store the mower in a cool, clean, and dry place away from children. Cover the mower to keep it clean and protected.

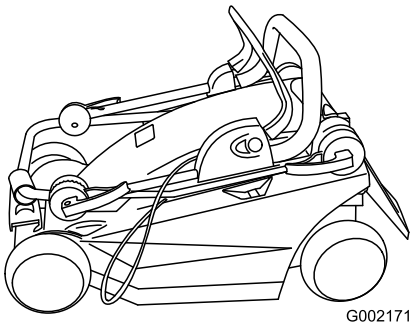

Figure 25

1. Clean the mower housing.
2. Check the condition of the blade.

Troubleshooting

Problem	Possible Cause	Corrective Action
Motor will not start	1. The extension cord is not connected to the mower. 2. The extension cord is damaged. 3. The fuse or circuit breaker is blown.	1. Connect the extension cord to the mower and plug the other end of the extension cord into a normal household outlet. 2. Check the extension cord, and repair the cord if it is damaged. 3. Check the outlet fuse or the circuit breaker.
Motor starts hard or loses power	1. The mower discharge chute is plugged. 2. The underside of the mower housing needs to be cleaned. 3. The mower is on the grass.	1. Clean the mower discharge chute. 2. Clean the underside of the mower housing. 3. Move the mower to the pavement and start the mower.
Mower or motor vibrates excessively	1. The blade is not balanced. 2. The blade mounting bolt is loose. 3. The mower discharge chute is plugged. 4. The underside of the mower housing needs to be cleaned. 5. The motor mounting bolts are loose.	1. Balance the blade. 2. Tighten the blade mounting bolt. 3. Clean the mower discharge chute. 4. Clean the underside of the mower deck. 5. Tighten the motor mounting bolts.
Uneven cutting pattern	1. The blade is dull and is not balanced. 2. You are mowing the same pattern every time you mow. 3. The underside of the mower housing needs to be cleaned.	1. Sharpen and balance the blade. 2. Change the mowing pattern. 3. Clean the underside of the mower deck.
Discharge chute plugs	1. The cutting height is set too low. 2. You are trying to mow wet grass. 3. The underside of the mower housing needs to be cleaned.	1. Raise the cutting height. 2. Allow the grass to dry before mowing. 3. Clean the underside of the mower deck.


TORO®