FORM NO. 3315–733

TORO®

MODEL NO. 03744	PARTS CATALOG

SIDE SKID KIT
For Reelmaster 450D Cutting Units

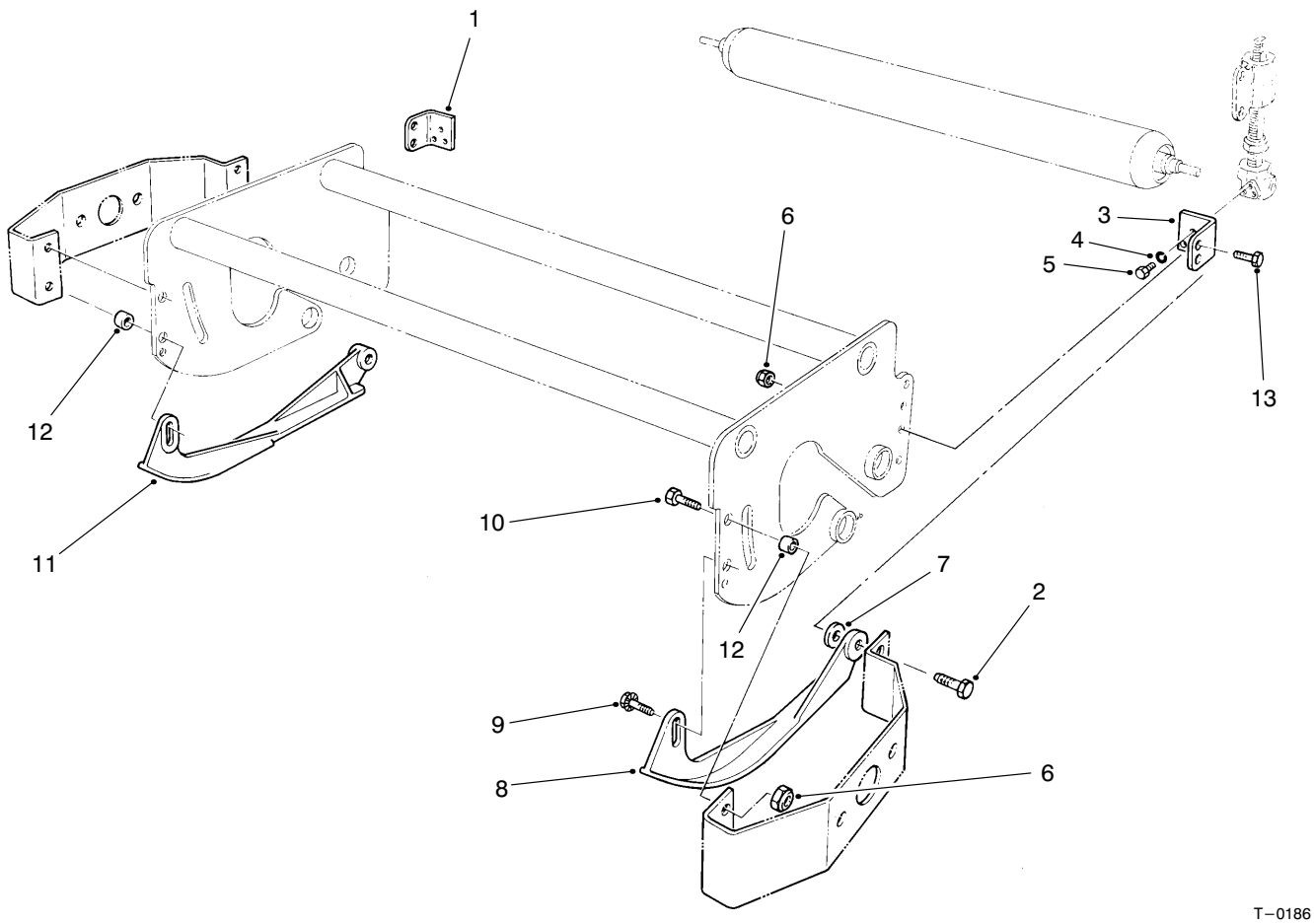

SKID ASSEMBLY

Ref. No.	Part No.	Description	No. Used
1	59–6000	Bracket – Skid R.H.	1
2	325–6	Screw – Cap Hex. Hd.	2
3	59–6010	Bracket – Skid L.H.	1
4	3253–4	Washer – Lock	6
5	322–2	Screw – Cap Hex. Hd.	6
6	3296–25	Nut – Lock	6
7	84–0880	Spacer	2

Ref. No.	Part No.	Description	No. Used
8	84–0810	Skid – L.H.	1
9	3234–27	Screw – Cap Hex. Hd.	2
10	325–7	Screw – Cap Hex. Hd.	2
11	84–0820	Skid – R.H.	1
12	59–6030	Spacer	4
13	325–9	Screw – Cap Hex. Hd.	2

NOTE: Quantity listed is for 1 cutting unit.

TPS

© The TORO Company –1992