FORM NO. 3315–741

TORO

MODEL NO. 30575–30001 & UP

PARTS CATALOG

72" SIDE DISCHARGE CUTTING UNIT
(For Groundsmaster 200 Series)

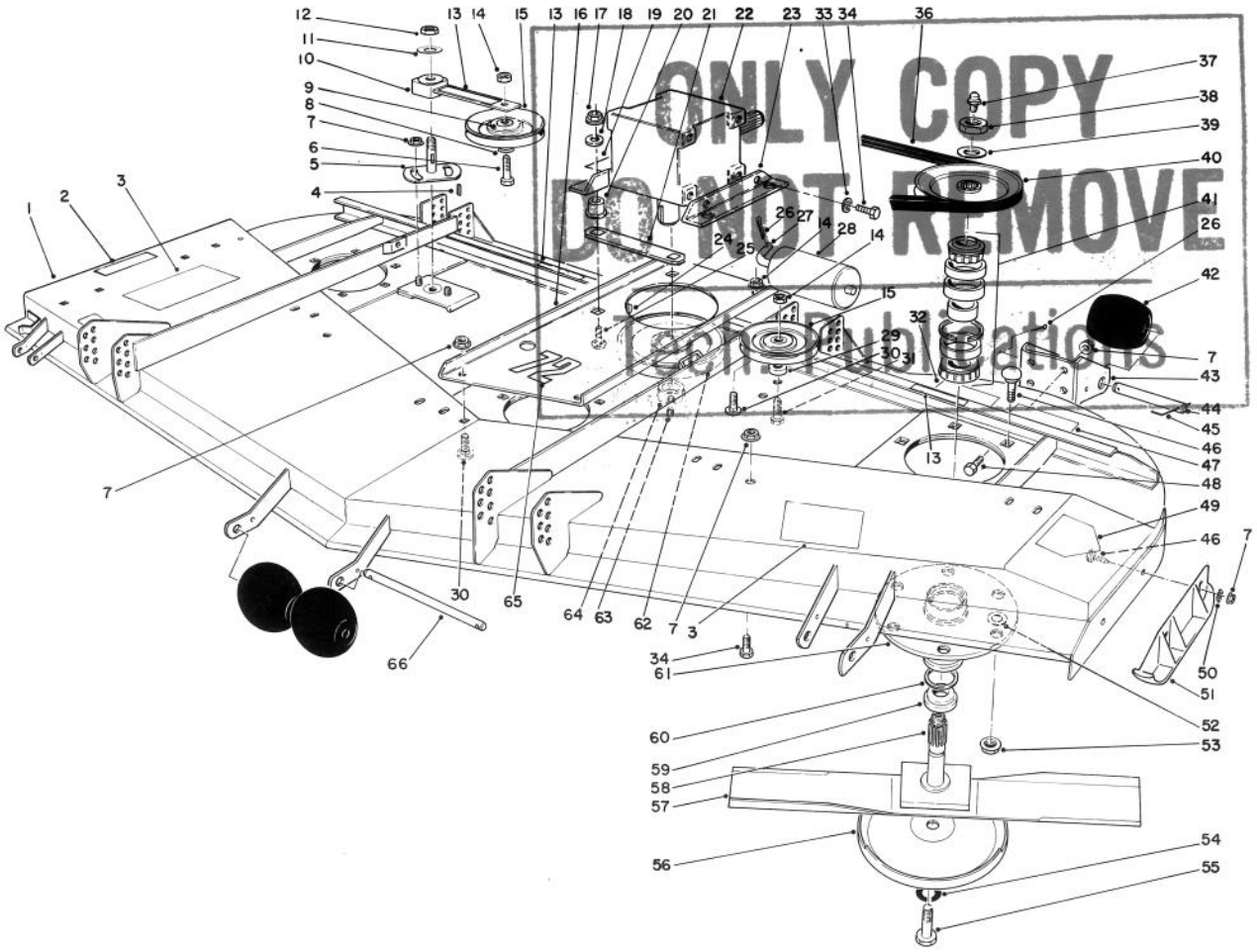

DECK ASSEMBLY

Ref. No.	Part No.	Description	No. Used
1	57–0300	Housing	1
2	66–6380	Decal – Deflector Missing	1
3	66–1340	Decal – Danger	2
4	5–1077	Key – Square	1
5	44–6300	Idler Plate	1
6	3211–8	Screw – Cap Hex. Hd.	1
7	3290–357	Nut – Lock	14
8	65–5950	Bushing – Pulley	2
9	7–0081	Washer – Special	2
10	27–8580	Assembly – Idler Socket & Bushing	1
11	3256–27	Washer – Flat	1
12	3296–33	Nut – Lock	1
13	67–5360	Decal – Shield Missing	3
14	3296–5	Nut – Lock	2
15	65–5940	Pulley – Idler	2

Ref. No.	Part No.	Description	No. Used
16	68–8530	Base – Gear Box	1
17	32153–2	Nut – Lock	4
18	63–8410	Washer–Lock	4
19	70–2560	Decal – Lube	1
20	63–9750	Mount – Isolation	4
21	68–9890	Cover – Gear Box, Front	1
22	68–6810	Gear Box	1
23	68–8560	Bracket – Gear Box	2
24	3257–5	Key – Woodruff	1
25	3231–26	Bolt – Carriage	4
26	3272–11	Pin – Cotter	7
27	40–0340	Shaft – Rear Roller	2
28	36–1740	Roller – Deck	2
29	44–6390	Spacer	1
30	3231–27	Bolt – Carriage	4
31	3211–9	Screw – Cap Hex. Hd.	1

TPS

©The TORO Company –1992

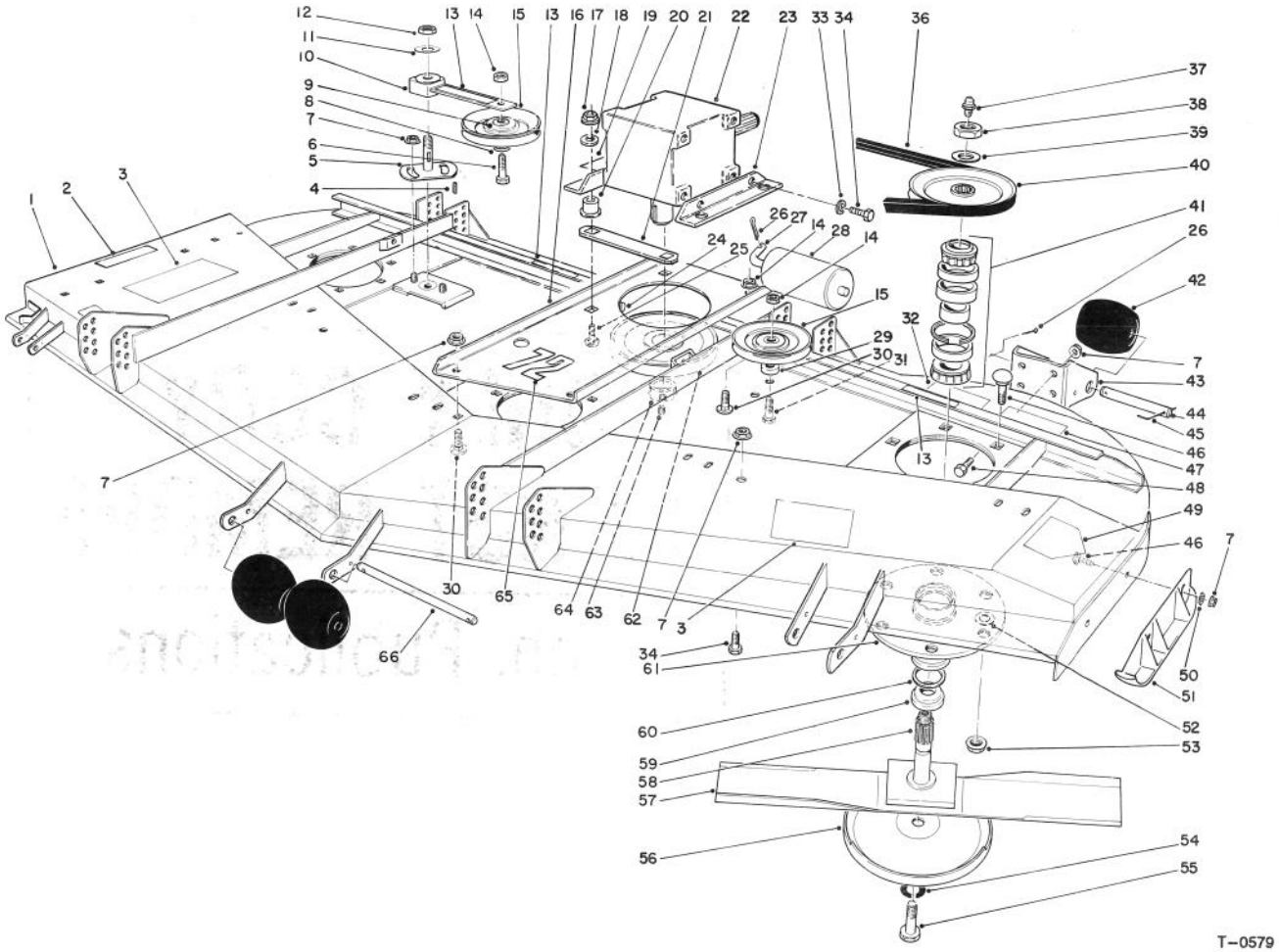

DECK ASSEMBLY (Continued)

Ref. No.	Part No.	Description	No. Used
32	68–8340	Decal – Blade Bolt Torque	1
33	3253–21	Washer – Lock	4
34	323–4	Screw – Cap Hex. Hd.	6
36	57–0240	V–Belt	1
37	302–2	Fitting – Grease	3
38	32146–20	Nut – Hex. Jam	3
39	7–4150	Washer	3
40	57–0560	Pulley	3
41	46–8530	Assembly – Bearing	3
42	29–4820	Roller	6
43	57–0580	Bracket – Roller Left Rear	1
*	57–0590	Bracket – Roller Right Rear	1
44	57–0680	Shaft – Roller	4
45	57–0690	Pin – Cotter, Special	5
46	3231–22	Bolt – Carriage	20
47	68–7270	Decal – Rear Weight 70#	1
48	323–7	Screw – Cap Hex. Hd.	4
49	43–8480	Decal – Danger	1
50	3290–224	Washer – Lock	2

Ref. No.	Part No.	Description	No. Used
51	57–0570	Skid	1
52	3256–24	Washer – Flat	A/R
53	32128–21	Nut – Flange	18
54	67–5770	Washer	3
55	44–2200	Screw – Cap, Blade	3
56	72–9361	Cup – Anti–Scalp	3
57	57–0250	Blade	3
58	27–0920	Spindle – Shaft	3
59	27–0950	Spacer – Spindle Bearing	3
60	253–139	Seal – Wave	6
61	61–4160	Housing – Spindle	3
62	63–9900	Pulley – Gear Box	1
63	3245–9	Screw – Set, Socket Hd.	2
64	27–6140	Bushing – Taper Lock (Incl. Ref. #63)	1
65	57–0280	Decal – 72	1
66	40–6400	Shaft – Roller	1
*	57–0260	Assy. – Spindle Housing (Incl. Ref. #37–41 & 58–61)	3

*Not Illustrated

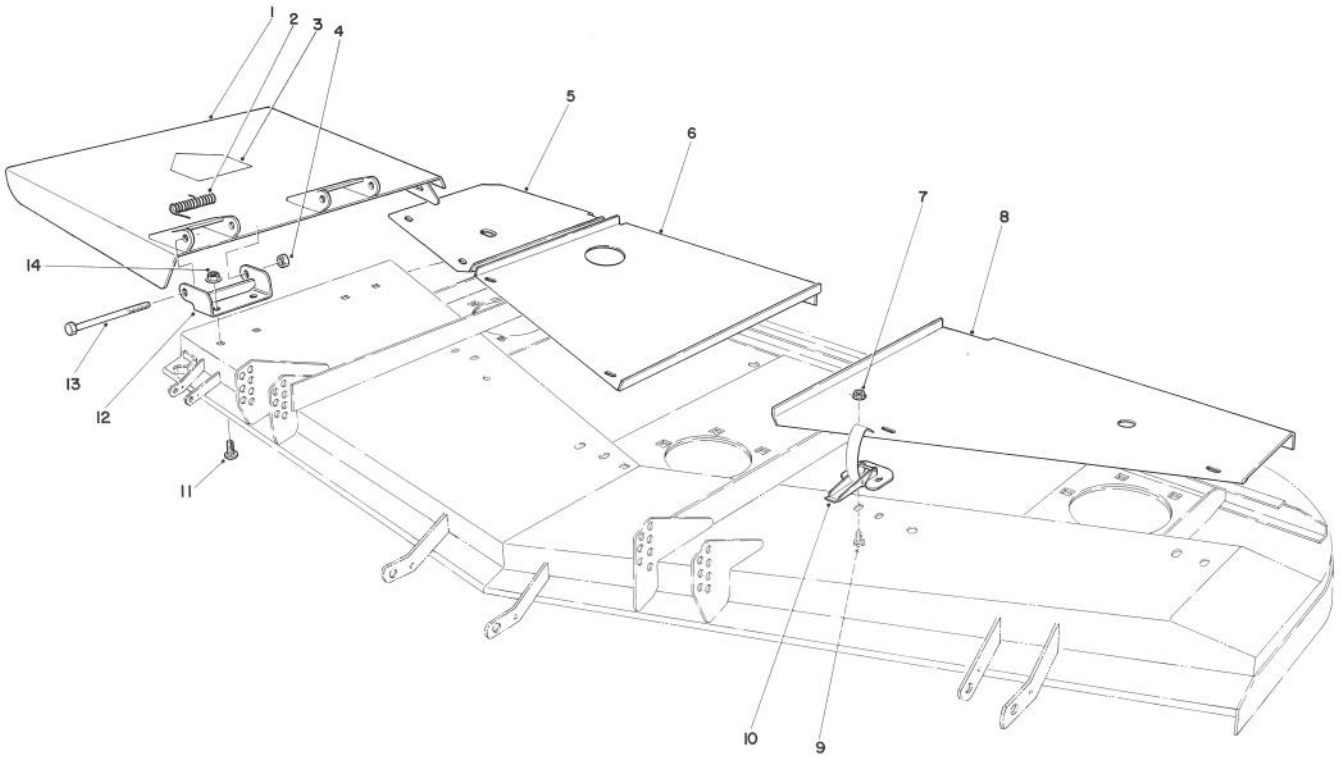

T–0589

DEFLECTOR & COVERS ASSEMBLIES

Ref. No.	Part No.	Description	No. Used
1	14–0909	Deflector Assembly (Incl. Ref. #3)	1
2	51–1550	Spring	2
3	43–8480	Decal – Danger	1
4	32153–5	Nut – Lock	2
5	57–0230	Cover – R.H.	1
6	57–0210	Cover – Center	1
7	32128–17	Nut – Lock	12

Ref. No.	Part No.	Description	No. Used
8	57–0220	Cover – L.H.	1
9	3290–321	Screw – Hex Slotted Hd.	12
10	249–21	Latch – Draw	6
11	3231–27	Bolt – Carriage	4
12	51–1530	Bracket – Hinge	2
13	325–17	Screw – Cap Hex. Hd.	2
14	3290–357	Nut – Flange	4

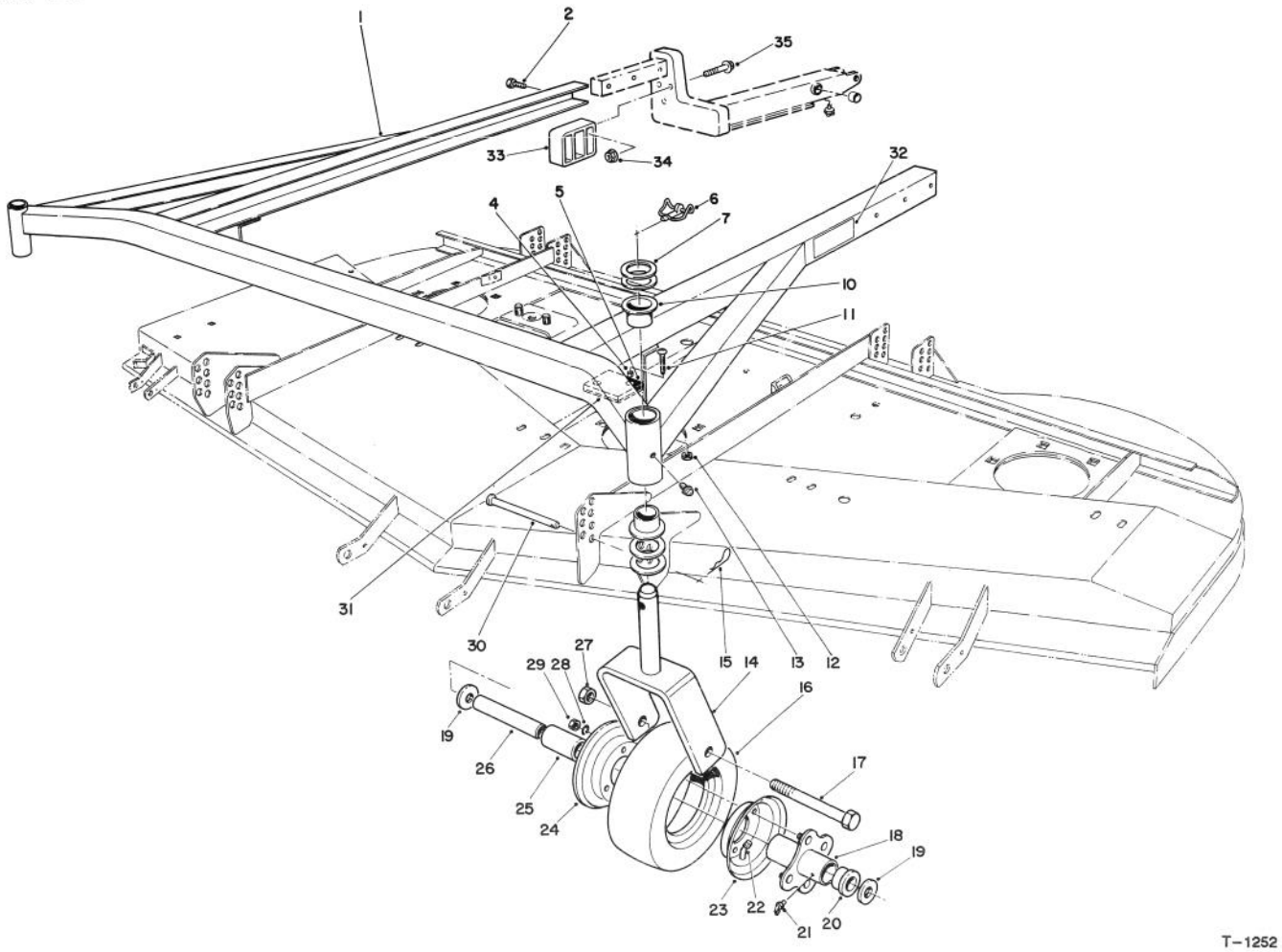

T–1252

CARRIER FRAME ASSEMBLY

Ref. No.	Part No.	Description	No. Used
1	83–4570	Carrier Frame Assembly (Incl. Ref. #10)	1
2	325–32	Screw – Cap Hex. Hd.	6
4	40–9520	Spacer – Split	4
5	40–0330	Cushion – Rubber	2
6	3290–384	Pin – Lynch	2
7	3–6781	Washer – Thrust	8
10	28–9290	Bushing – Special	4
11	32122–28	Screw – Mach. Truss Hd.	4
12	3296–2	Nut – Lock	4
13	302–5	Fitting – Grease	2
14	68–8900	Fork – Castor	2
15	3290–355	Pin – Hair Cotter	4
16	68–8960	Tire	2
17	325–19	Screw – Cap Hex. Hd.	2
18	68–8940	Hub – Center	2
19	3256–6	Washer – Flat	4
20	62–5580	Bushing	4

Ref. No.	Part No.	Description	No. Used
21	302–61	Fitting – Grease	2
22	68–8950	Tube w/Valve	2
23	68–8920	Wheel Half – Female	2
24	68–8930	Wheel Half – Male	2
25	62–5570	Bearing – Roller	2
26	68–8980	Bushing – Spanner	2
27	32153–5	Nut – Lock	2
28	3253–4	Washer – Lock	8
29	3217–6	Nut – Hex.	8
30	283–55	Pin – Clevis	4
31	42–6200	Shim – Cushion	A/R
32	68–8360	Decal – Height Of Cut	1
33	83–4520	Cradle – Rear	2
34	32128–40	Nut – Flange	6
35	3234–19	Screw – Flange Hd.	6
*	13–3869	Castor Wheel Assembly (Incl. Ref. #16 –18, 20–25 & 28–29)	1 2

*Not Illustrated

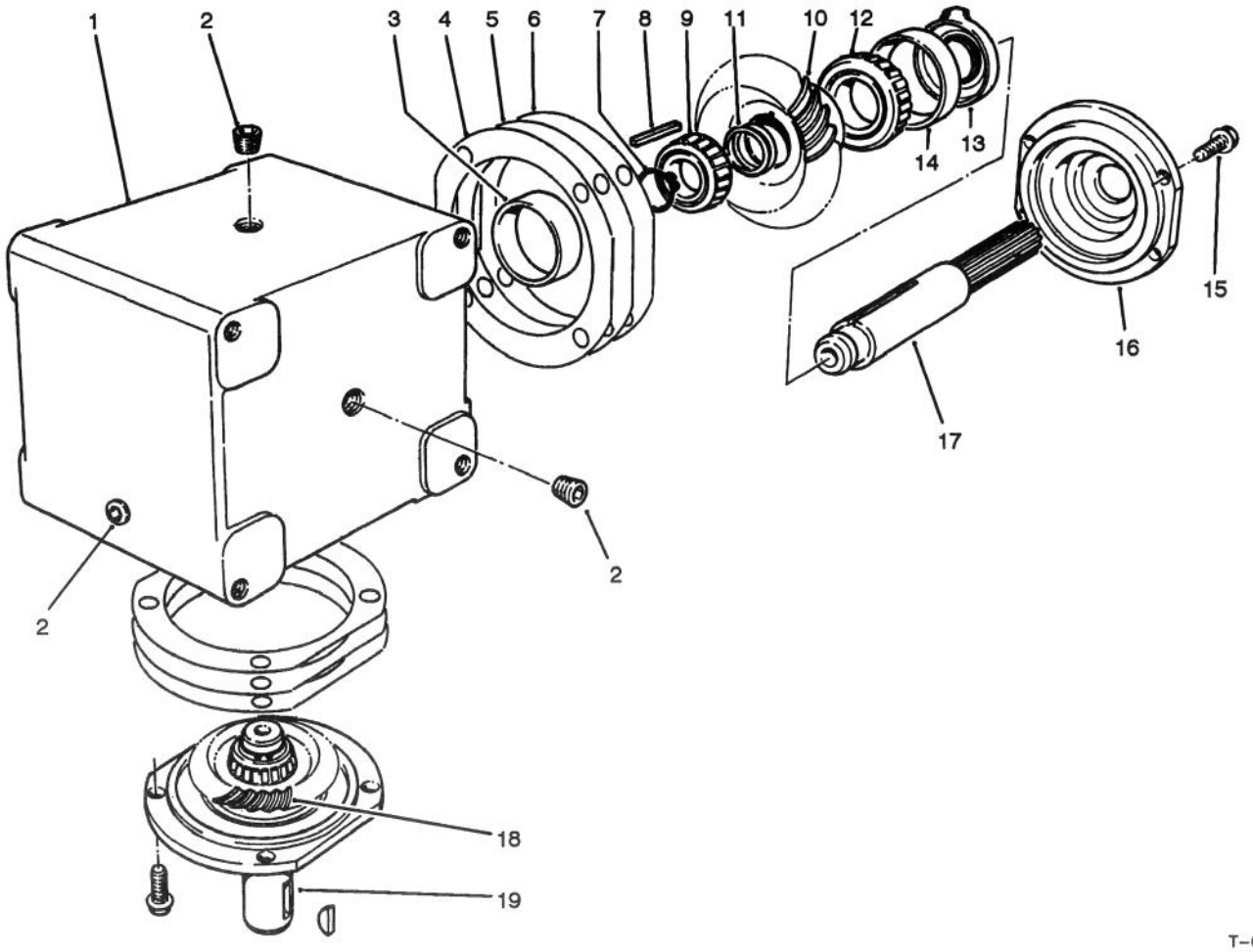

T–0977

GEAR BOX ASSEMBLY NO. 68–6810

Ref. No.	Part No.	Description	No. Used
1	68–7030	Housing	1
2	62–3490	Plug – Pipe (Solid)	4
3	62–3360	Cup – Bearing	2
4	62–3420	Gasket (.015 in.)	A/R
5	62–3430	Gasket (.005 in.)	A/R
6	62–3440	Gasket (.003 in.)	A/R
7	68–7070	Ring – Retaining	2
8	62–3380	Key	2
9	62–3370	Cone – Bearing	2
10	68–7080	Gear	1

Ref. No.	Part No.	Description	No. Used
11	72–9370	Shim (.020 in.)	4
12	62–3330	Cone – Gear	1
13	62–3400	Seal	2
14	62–3340	Cup – Bearing	2
15	62–3310	Screw – Cap	8
16	62–3410	Cap	2
17	68–7040	Shaft	1
18	68–7060	Gear	1
19	68–7050	Shaft	1

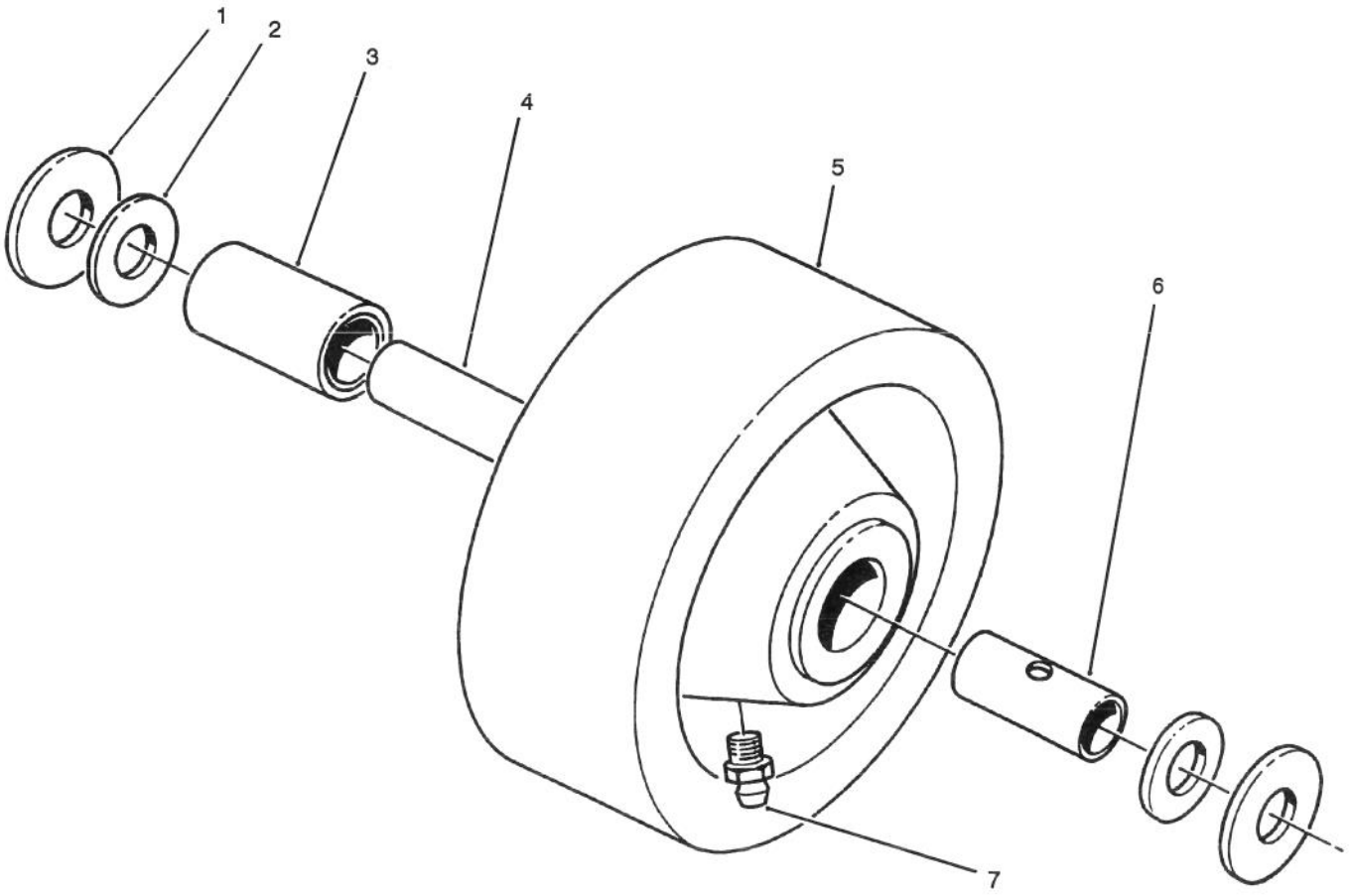

T–0633

PHENOLIC CASTER WHEEL NO. 27–1050 (Optional)

Ref. No.	Part No.	Description	No. Used
1	27–1170	Washer – Thrust	2
2	27–1180	Retainer – Bearing	2
3	27–1210	Bearing – Roller	1
†4	68–8980	Bushing – Spanner	1
5	27–1190	Wheel – Caster	1
6	27–1200	Bushing – Spanner	1
7	302–55	Fitting – Grease	1

†Must be ordered separately for use with 1/2" bolt.

TORO PART NUMBER INDEX

Part No.	Description	Page No.	Ref. No.	Qty
3–6781	Washer – Thrust	4	7	8
5–1077	Key – Square	1	4	1
7–0081	Washer – Special	1	9	2
7–4150	Washer	2	39	3
13–3869	Castor Wheel Assembly	4	*	1
14–0909	Deflector Assembly	3	1	1
27–1210	Bearing – Roller	6	3	1
27–0920	Spindle – Shaft	2	58	3
27–0950	Spacer – Spindle Bearing	2	59	3
27–1170	Washer – Thrust	6	1	2
27–1180	Retainer – Bearing	6	2	2
27–1190	Wheel – Caster	6	5	1
27–1200	Bushing – Spanner	6	6	1
27–6140	Bushing – Taper Lock	2	64	1
27–8580	Assembly – Idler	1	10	
28–9290	Bushing – Special	4	10	4
29–4820	Roller	2	42	6
36–1740	Roller – Deck	1	28	2
40–0330	Cushion – Rubber	4	5	2
40–0340	Shaft – Rear Roller	1	27	2
40–6400	Shaft – Roller	2	66	1
40–9520	Spacer – Split	4	4	4
42–6200	Shim – Cushion	4	31	A/R
43–8480	Decal – Danger	3	3	1
43–8480	Decal – Danger	2	49	1
44–2200	Screw – Cap, Blade	2	55	3
44–6300	Idler Plate	1	5	1
44–6390	Spacer	1	29	1
46–8530	Assembly – Bearing	2	41	3
51–1530	Bracket – Hinge	3	12	2
51–1550	Spring	3	2	2
57–0210	Cover – Center	3	6	1
57–0220	Cover – L.H.	3	8	1
57–0230	Cover – R.H.	3	5	1
57–0240	V–Belt	2	36	1
57–0250	Blade	2	57	3
57–0260	Assy. – Spindle Housing	2	*	3
57–0280	Decal – 72	2	65	1
57–0300	Housing	1	1	1
57–0560	Pulley	2	40	3
57–0570	Skid	2	51	1
57–0580	Bracket – Roller Left Rear	2	43	1
57–0590	Bracket – Roller Right Rear	2	*	1
57–0680	Shaft – Roller	2	44	4
57–0690	Pin – Cotter, Special	2	45	5
61–4160	Housing – Spindle	2	61	3
62–3310	Screw – Cap	5	15	8
62–3330	Cone – Gear	5	12	1
62–3340	Cup – Bearing	5	14	2
62–3360	Cup – Bearing	5	3	2
62–3370	Cone – Bearing	5	9	2
62–3380	Key	5	8	2
62–3400	Seal	5	13	2
62–3410	Cap	5	16	2
62–3420	Gasket (.015 in.)	5	4	A/R
62–3430	Gasket (.005 in.)	5	5	A/R
62–3440	Gasket (.003 in.)	5	6	A/R
62–3490	Plug – Pipe (Solid)	5	2	4
62–5570	Bearing – Roller	4	25	2
62–5580	Bushing	4	20	4
63–8410	Washer–Lock	1	18	4
63–9750	Mount – Isolation	1	20	4
63–9900	Pulley – Gear Box	2	62	1
65–5940	Pulley – Idler	1	15	2
65–5950	Bushing – Pulley	1	8	2
66–1340	Decal – Danger	1	3	2
66–6380	Decal – Deflector Missing	1	2	1
67–5360	Decal – Shield Missing	1	13	3
67–5770	Washer	2	54	3
68–6810	Gear Box	1	22	1
68–7030	Housing	5	1	1
68–7040	Shaft	5	17	1
68–7050	Shaft	5	19	1
68–7060	Gear	5	18	1
68–7070	Ring – Retaining	5	7	2
68–7080	Gear	5	10	1
68–7270	Decal – Rear Weight 70#	2	47	1
68–8340	Decal – Blade Bolt Torque	2	32	1
68–8360	Decal – Height Of Cut	4	32	1
68–8530	Base – Gear Box	1	16	1
68–8560	Bracket – Gear Box	1	23	2
68–8900	Fork – Castor	4	14	2
68–8920	Wheel Half – Female	4	23	2
68–8930	Wheel Half – Male	4	24	2
68–8940	Hub – Center	4	18	2
68–8950	Tube w/Valve	4	22	2
68–8960	Tire	4	16	2
68–8980	Bushing – Spanner	6	4	1
68–8980	Bushing – Spanner	4	26	2
68–9890	Cover – Gear Box, Front	1	21	1
70–2560	Decal – Lube	1	19	1
72–9361	Cup – Anti–Scalp	2	56	3
72–9370	Shim (.020 in.)	5	11	4
83–4520	Cradle – Rear	4	33	2
83–4570	Carrier Frame Assembly	4	1	1
249–21	Latch – Draw	3	10	6
253–139	Seal – Wave	2	60	6
283–55	Pin – Clevis	4	30	4
302–2	Fitting – Grease	2	37	3
302–5	Fitting – Grease	4	13	2
302–55	Fitting – Grease	6	7	1
302–61	Fitting – Grease	4	21	2
323–4	Screw – Cap Hex. Hd.	2	34	6
323–7	Screw – Cap Hex. Hd.	2	48	4
325–17	Screw – Cap Hex. Hd.	3	13	2
325–19	Screw – Cap Hex. Hd.	4	17	2
325–32	Screw – Cap Hex. Hd.	4	2	6
3211–8	Screw – Cap Hex. Hd.	1	6	1
3211–9	Screw – Cap Hex. Hd.	1	31	1
3217–6	Nut – Hex.	4	29	8
3231–22	Bolt – Carriage	2	46	20
3231–26	Bolt – Carriage	1	25	4
3231–27	Bolt – Carriage	3	11	4
3231–27	Bolt – Carriage	1	30	4
3234–19	Screw – Flange Hd.	4	35	6
3245–9	Screw – Set, Socket Hd.	2	63	2
3253–4	Washer – Lock	4	28	8
3253–21	Washer – Lock	2	33	4
3256–6	Washer – Flat	4	19	4
3256–24	Washer – Flat	2	52	A/R
3256–27	Washer – Flat	1	11	1
3257–5	Key – Woodruff	1	24	1
3272–11	Pin – Cotter	1	26	7
3290–224	Washer – Lock	2	50	2
3290–321	Screw – Hex Slotted Hd.	3	9	12
3290–355	Pin – Hair Cotter	4	15	4
3290–357	Nut – Flange	3	14	4
3290–357	Nut – Lock	1	7	14
3290–384	Pin – Lynch	4	6	2
3296–2	Nut – Lock	4	12	4
3296–5	Nut – Lock	1	14	2
3296–33	Nut – Lock	1	12	1
32122–28	Screw – Mach. Truss Hd.	4	11	4
32128–17	Nut – Lock	3	7	12
32128–21	Nut – Flange	2	53	18
32128–40	Nut – Flange	4	34	6
32146–20	Nut – Hex. Jam	2	38	3
32153–2	Nut – Lock	1	17	4
32153–5	Nut – Lock	3	4	2
32153–5	Nut – Lock	4	27	2

PRODUCT CHANGES

In an effort to make improvements available to TORO owners as quickly as possible, minor changes are incorporated into Toro's products from time to time that do not become immediately shown in the Parts Catalog. If such a change has been made in your unit, which is not reflected in your manual, see your TORO Distributor or his Authorized TORO Service Dealer for information and part numbers.

COUNTRIES OTHER THAN THE UNITED STATES OR CANADA

Customers who have purchased TORO products exported from the United States or Canada should contact their Toro Distributor (Dealer) to obtain guarantee policies for your country, province or state. If for any reason you are dissatisfied with your Distributor's service or have difficulty obtaining guarantee information, contact the TORO importer. If all other remedies fail, you may contact us at The Toro Company.

MAINTENANCE RECORD

Date								

Litho in U.S.A.