FORM NO. 3315−759 Rev.B

TORO®

MODEL NO. 70040−3900001 & UP

PARTS CATALOG

WHEEL HORSE®
8−25 RECYCLER® RIDING MOWER

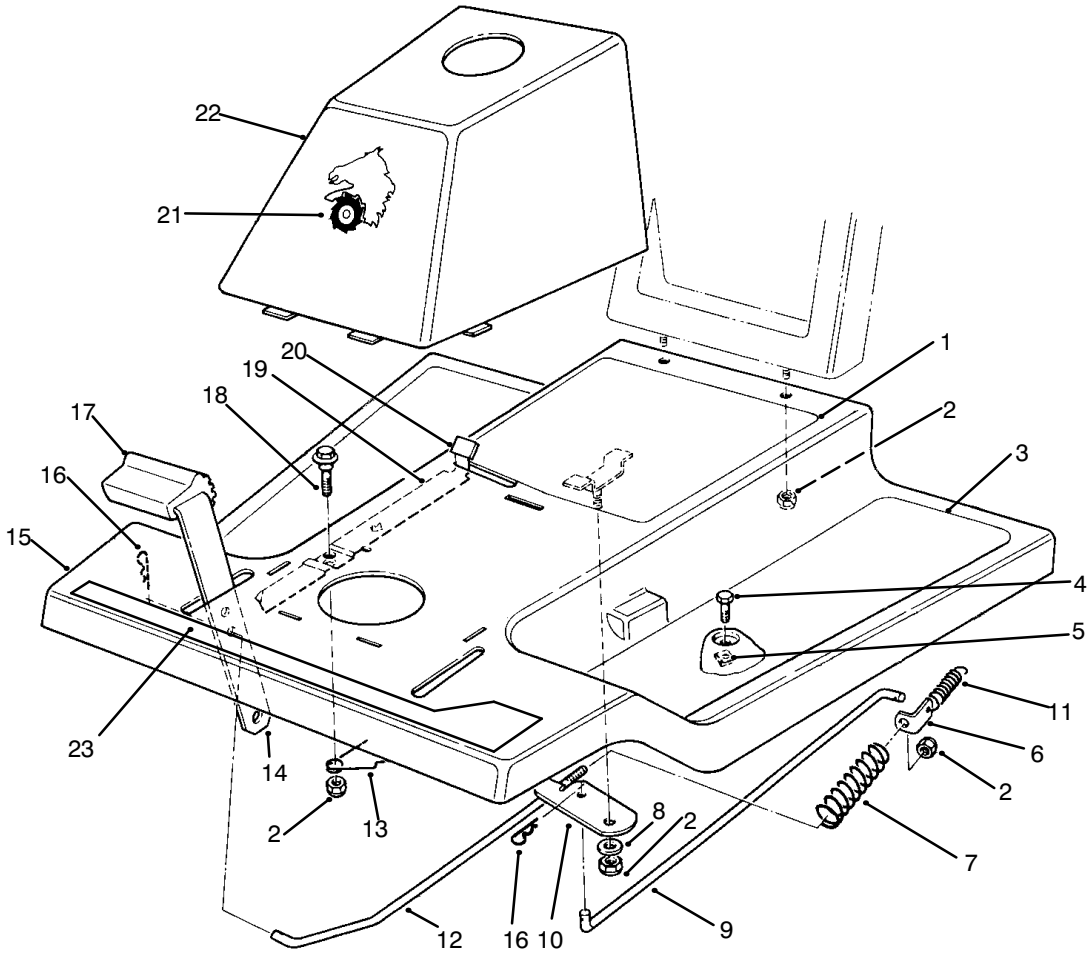

C−0727

FRONT BODY ASSEMBLY

Ref. No.	Part No.	Description	No. Used
1	76−1620	Decal − Instruction	1
2	3296−29	Nut − Lock	5
3	44−7030	Tread − Foot Rest	2
4	32104−110	Screw − Cap Hex. Hd.	4
5	3290−347	Nut − U−Type	4
6	67−1590	Bracket − Brake Return	1
7	67−1430	Spring − Compression	1
8	26−9530	Washer − Pivot	1
9	67−1340	Rod − Brake, Transmission	1
10	67−1330−03	Lever − Brake, Bellcrank	1
11	67−1450	Spring − Extension	1
12	67−1350	Rod − Front, Brake	1

Ref. No.	Part No.	Description	No. Used
13	19−1970	Spring − Brake, Parking	1
14	67−1130−03	Pedal − Brake & Clutch	2
15	67−1070−01	Body W.A. − Front	1
16	3290−250	Pin − Hair, Cotter	2
17	65−2920	Pad − Pedal	2
18	19−1470	Bolt − Shoulder	1
19	19−1610−03	Lever − Brake, Parking	1
20	19−2200	Tip − Brake, Parking	1
21	76−3870	Decal	1
22	55−7101	Tower (Incl. Ref. #21)	1
23	82−6260	Decal − Recylcer	1

1993 The TORO Company Rev. 1995
All Rights Reserved

TPS

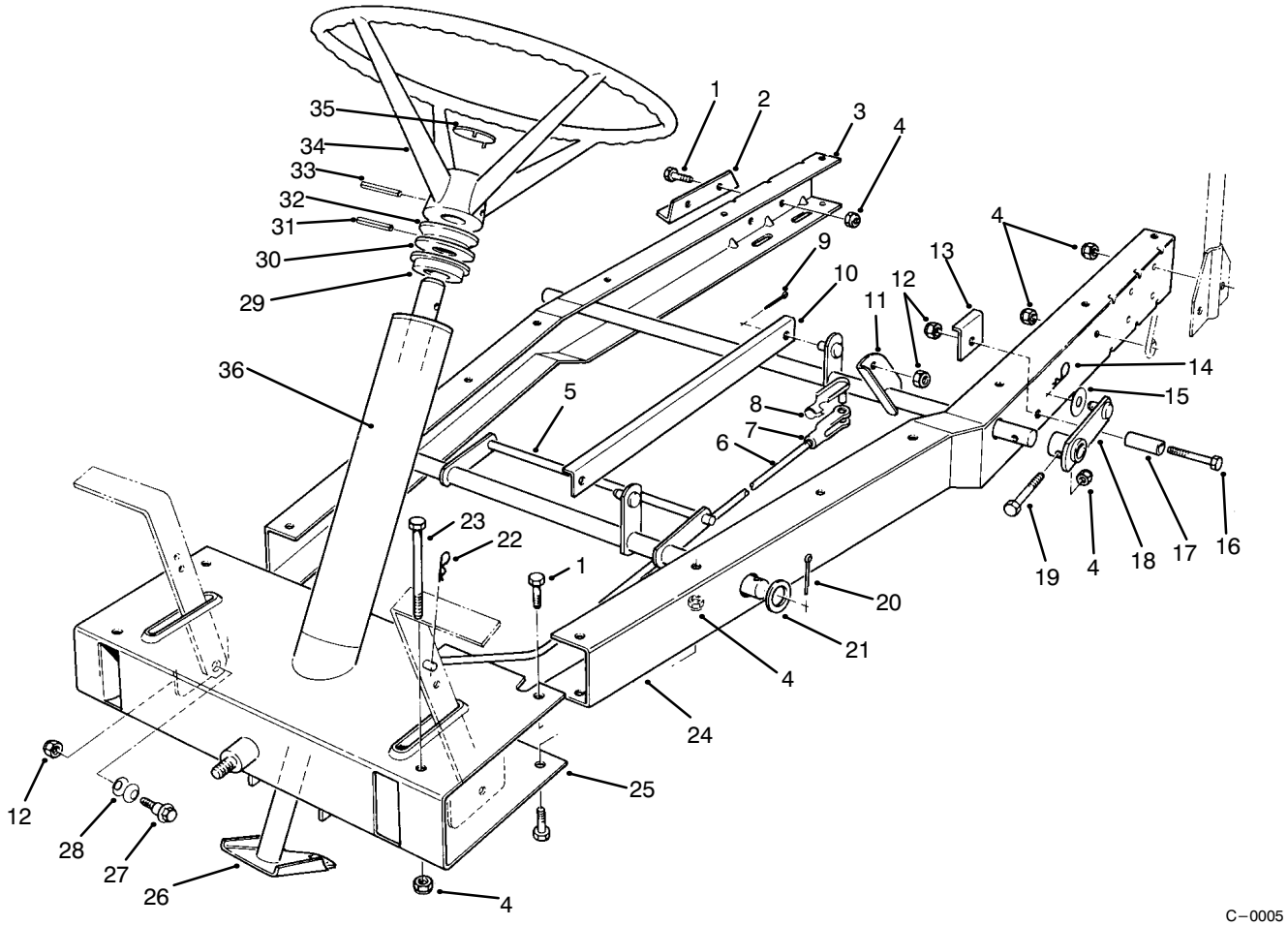

C−0005

FRAME ASSEMBLY

Ref. No.	Part No.	Description	No. Used
1	322−3	Screw − Cap Hex. Hd.	6
2	44−7140−01	Mount − Bearing, Axle	1
3	67−0520−01	Channel − R.H.	1
4	3296−29	Nut − Lock	16
5	67−0010−01	Lift W.A. − Front, Deck	1
6	67−0430	Rod − Clutch	1
7	282−27	Clevis	1
8		Assembly − Pin, Clevis	1
9	3272−6	Pin − Cotter	2
10	67−0090−03	Bracket − Link, H.O.C.	1
11	67−0050−01	Tube W.A. − Support, Rear	1
12	3296−39	Nut − Lock	5
13	67−1510−03	Brace − Stop, Deck	2
14	3290−355	Pin − Hair, Cotter	2
15	67−1460	Washer − Flat	2
16	323−10	Screw − Cap Hex. Hd.	2
17	68−8380	Spacer − Stop, Deck	2
18	67−0300−01	Lever W.A. − H.O.C.	2
19	46−2511	Bolt − Mounting, Axle	2

Ref. No.	Part No.	Description	No. Used
20	3272−23	Pin − Cotter	2
21	3256−29	Washer − Flat	2
22	3290−250	PIn − Hair, Cotter	1
23	322−14	Screw − Cap Hex. Hd.	2
24	67−0530−01	Channel − L.H.	1
25	67−0450−01	Frame W.A. − Front	1
26	67−0830−03	Shaft W.A. − Steering	1
27	67−0870	Bolt − Shoulder	2
28	3290−413	Washer − Belleville	4
29	67−0850	Bushing − Steering	2
30	67−0860	Washer − Steering	1
31	32121−32	Pin − Roll	1
32	67−0440	Spacer − Steering	1
33	32121−78	Pin − Roll	1
34	49−3241	Wheel − Steering	1
35	88−9840	Insert − Wheel, Steering	1
36	76−4080	Decal	1
*	13−6049	Kit − Loose parts	1

*Not Illustrated

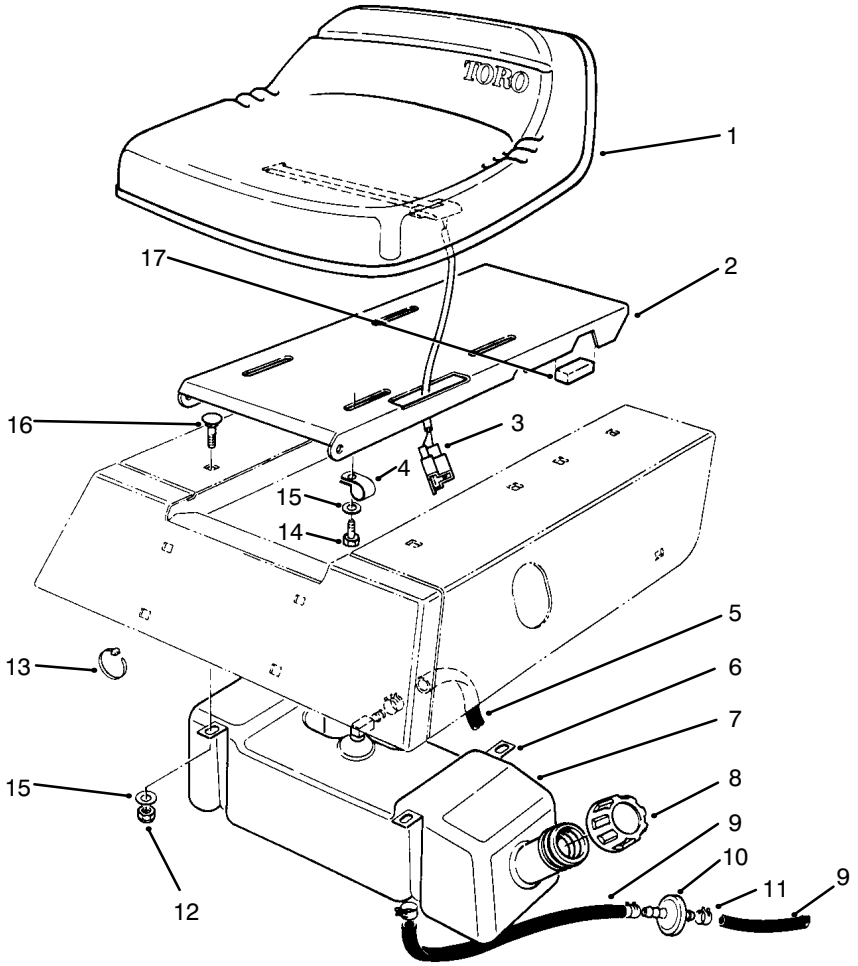

C−0002A

SEAT & GAS TANK ASSEMBLY

Ref. No.	Part No.	Description	No. Used
1	66−6680	Seat	1
2	67−1241−01	Base − Seat	1
3	38−1420	Switch − Seat	1
4	18−2970	R−Clamp	1
5	47−2986	Hose − Gas	1
6	67−0950	Strap − Tank, Gas	2
7	80−4580	Tank − Gas	1
8	55−3576	Assembly − Cap, Gas	1
9	47−2964	Hose − Gas	2

Ref. No.	Part No.	Description	No. Used
10	56−6360	Filter	1
11	2412−98	Clamp − Hose	5
12	3296−29	Nut − Lock	4
13	3290−378	Tie − Cable	1
14	322−3	Screw − Cap Hex. Hd.	4
15	3256−23	Washer − Flat	8
16	3230−20	Bolt − Carriage	6
17	66−6920	Pad − Isolator	2

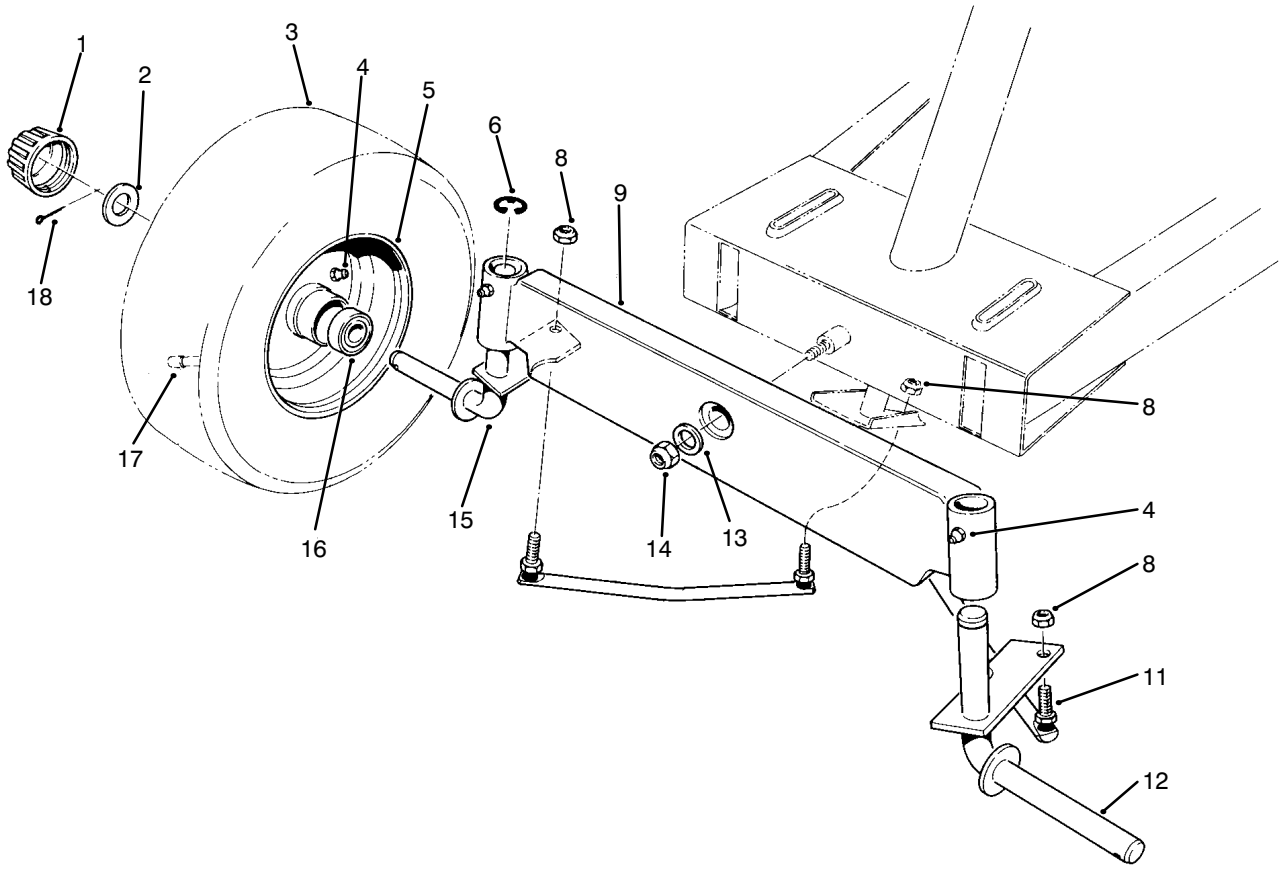

C−0003A

FRONT AXLE ASSEMBLY

Ref. No.	Part No.	Description	No. Used
1	61−9780	Cap − Hub	2
2	28−2480	Washer − Flat	2
3	231−116	Tire	2
4	302−67	Fitting − Grease	4
5	217−80	Rim	2
6	32151−48	Ring − Retaining	2
8	3296−4	Nut − Lock	4
9	67−0990−01	Axle − Front	1

Ref. No.	Part No.	Description	No. Used
11	67−0880	Assembly − Tie Rod	2
12	67−0810−01	Spindle − L.H.	1
13	3256−26	Washer − Flat	1
14	3296−25	Nut − Lock	1
15	67−0800−01	Spindle − R.H.	1
16	251−210	Bearing	4
17	232−27	Valve Stem w/Cap	2
18	3272−12	Pin − Cotter	2

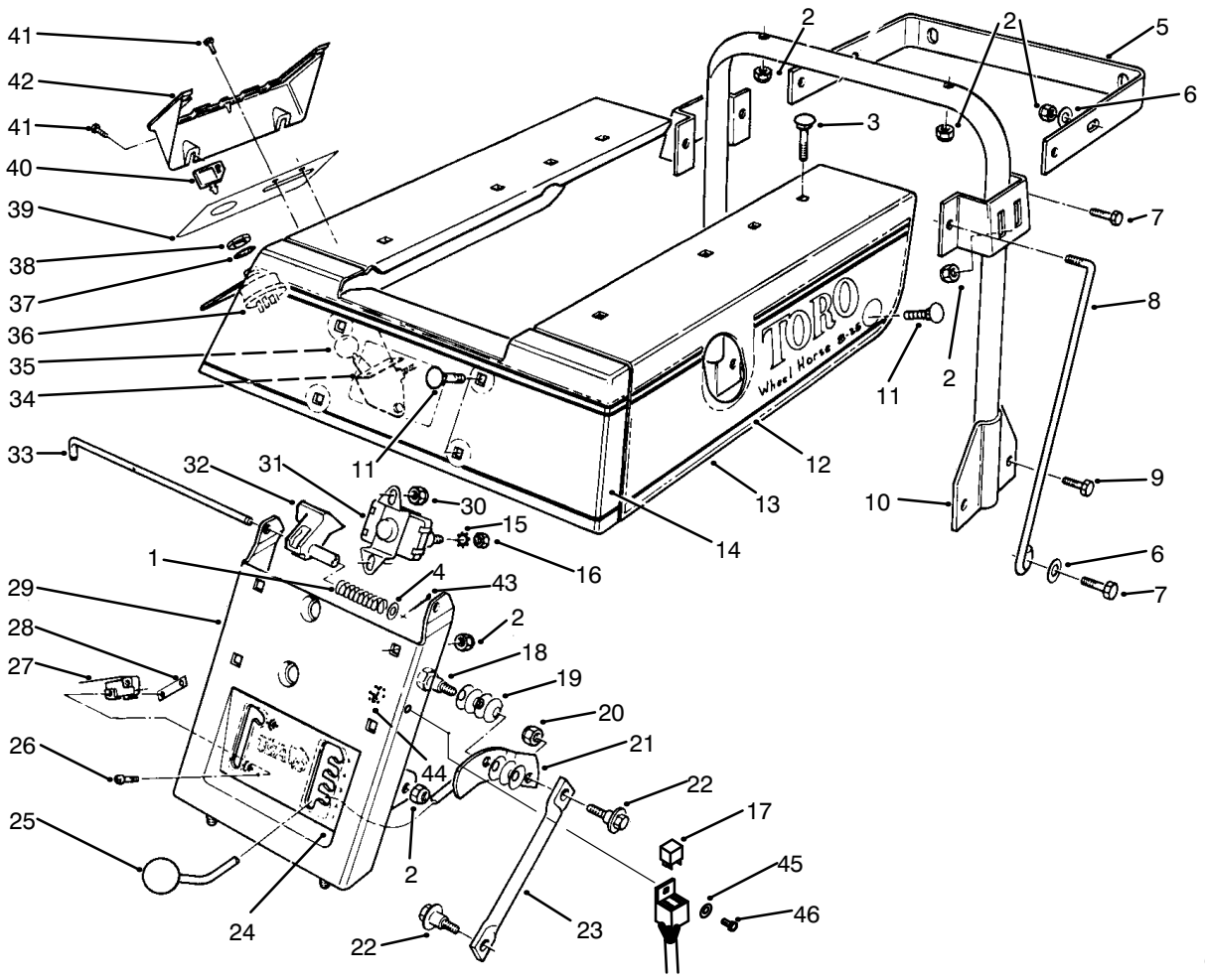

REAR BODY ASSEMBLY

Ref. No.	Part No.	Description	No. Used
1	71−8310	Spring − Prop, Seat	1
2	3296−29	Nut − Lock	11
3	3230−3	Bolt − Carriage	2
4	3256−22	Washer − Flat	1
5	67−1500−03	Bar − Stand	1
6	3256−23	Washer − Flat	4
7	322−5	Screw − Cap Hex. Hd.	4
8	67−1480	Brace − Support, Seat	2
9	322−3	Screw − Cap Hex. Hd.	4
10	67−0790−03	Support W.A. − Seat	1
11	3230−20	Bolt − Carriage	1
12	76−3840	Decal − Toro L.H.	1
*	76−3880	Decal − Toro R.H.	1
13	67−0231−01	Body W.A. − Rear	1
14	76−3850	Decal − Front	1
15	3255−7	Washer − Lock, Int. Tooth	2
16	3218−1	Nut − Jam	2
17	116397	Relay	1
18	28−0540	Bolt − Shoulder	1
19	3290−413	Washer − Belleville	7
20	3296−39	Nut − Lock	1
21	67−0270	Handle W.A. − H.O.C.	1
22	67−0870	Bolt − Shoulder	2
23	67−0080	Link − H.O.C.	1

Ref. No.	Part No.	Description	No. Used
24	76−3920	Decal − H.O.C./Deck Engage.	1
25	233−22	Knob	1
26	3290−313	Screw − Pan Head	2
27	40−8200	Switch − Micro	1
28	3290−354	Nut − Double	1
29	67−1090−01	Support W.A. − Seat	1
30	3296−42	Nut − Lock	2
31	47−1910	Solenoid	1
32	80−4330	Prop − Seat	1
33	80−4550	Rod − Base, Seat	1
34	66−6640	Control − Throttle	1
35	233−59	Knob	1
36	88−9830	Switch − Ignition (Incl. Ref. #37 & 38)	1
37	3254−5	Washer − Lock, Int. Tooth	1
38	218−461	Nut − Hex.	1
39	67−1270	Decal − Panel, Control	1
40	63−8360	Key	2
41	32144−42	Screw − Hex. Hd. Tapping	4
42	67−1030	Cover − Panel, Control	1
43	3274−4	Pin − Cotter	1
44	3296−2	Nut − Lock	1
45	3256−14	Washer − Flat	1
46	3290−134	Screw − Cap Mach. Hd.	1

*Not Illustrated

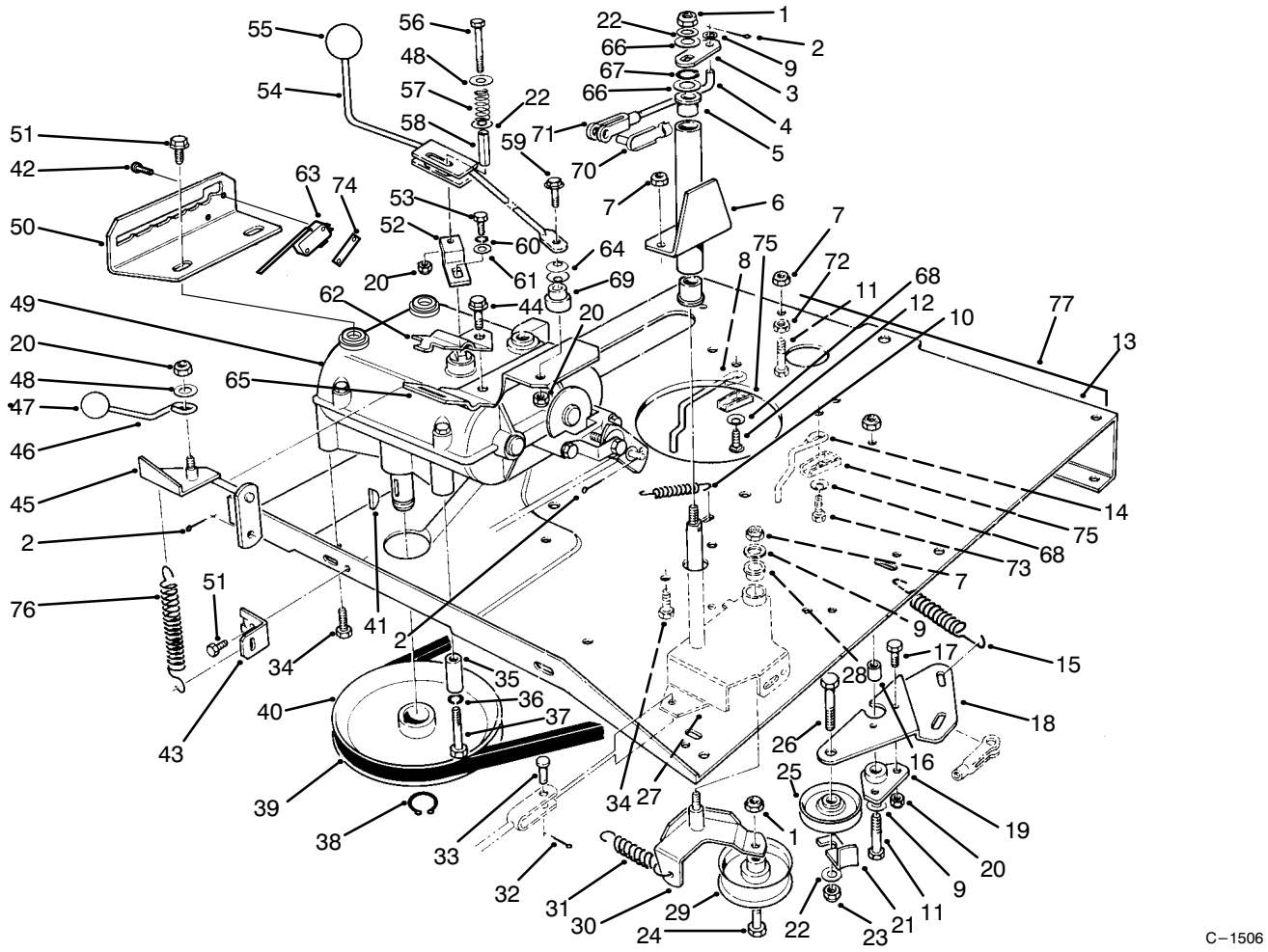

TRANSMISSION & LINKAGE ASSEMBLY

Ref. No.	Part No.	Description	No. Used
1	3296−39	Nut − Lock	2
2	3272−6	Pin − Cotter	1
3	67−0690−03	Flat − Deck Engage	1
4	68−8370	Link − Deck Engage	1
5	256−90	Bushing	3
6	67−0540−03	Tube W.A. − Pivot (Incl. Ref. #5)	1
7	3296−29	Nut − Lock	8
8	67−0930	Guide R.H. − Belt, Engine	1
9	3256−23	Washer − Flat	3
10	26−6700	Spring − Return, Brake	1
11	322−6	Screw − Cap Hex. Hd.	1
12	3230−2	Bolt − Carriage	1
13	76−4090−01	Plate − Engine	1
14	67−0940	Guide L.H. − Belt, Engine	1
15	68−9950	Spring − Traction	1
16	67−0410	Spacer − Pivot	1
17	321−4	Screw − Cap Hex. Hd.	2
18	67−0420−03	Plate − Mount, Idler	1
19	67−0400	Mount − Pivot	1
20	3296−42	Nut − Lock	5
21	12−9020	Retainer − Belt	1
22	3256−24	Washer − Flat	3
23	3296−59	Nut − Lock	1

Ref. No.	Part No.	Description	No. Used
24	323−10	Screw − Cap Hex. Hd.	1
25	12−5820	Pulley − Idler, Traction	1
26	323−8	Screw − Cap Hex. Hd.	1
27	67−0360−03	Bracket − Arm, Idler (Incl. Ref. #28)	1
28	256−155	Bushing	1
29	56−9870	Pulley − Idler, Deck	1
30	67−0330−03	Idler − Plate, Mount	1
31	67−9170	Spring	1
32	3274−4	Pin − Cotter	1
33	283−67	Pin − Clevis	1
34	322−3	Screw − Cap Hex. Hd.	5
35	67−0920	Guide − Belt	1
36	3253−4	Washer − Lock	1
37	322−10	Screw − Cap Hex. Hd.	1
38	32120−64	Ring − Retaining	1
39	67−0900	Belt − Traction	1
40	82−6450	Pulley − Transmission	1
41	3257−23	Key	1
42	147665	Screw − Tapping	2
43	67−0750−01	Bracket − Mount, Spring	1
44	32144−70	Screw − Hex. Hd. Tapping	1
45	67−0600−03	Lever W.A. − Deck Engage	1
46	67−0640	Handle − Deck Engage	1

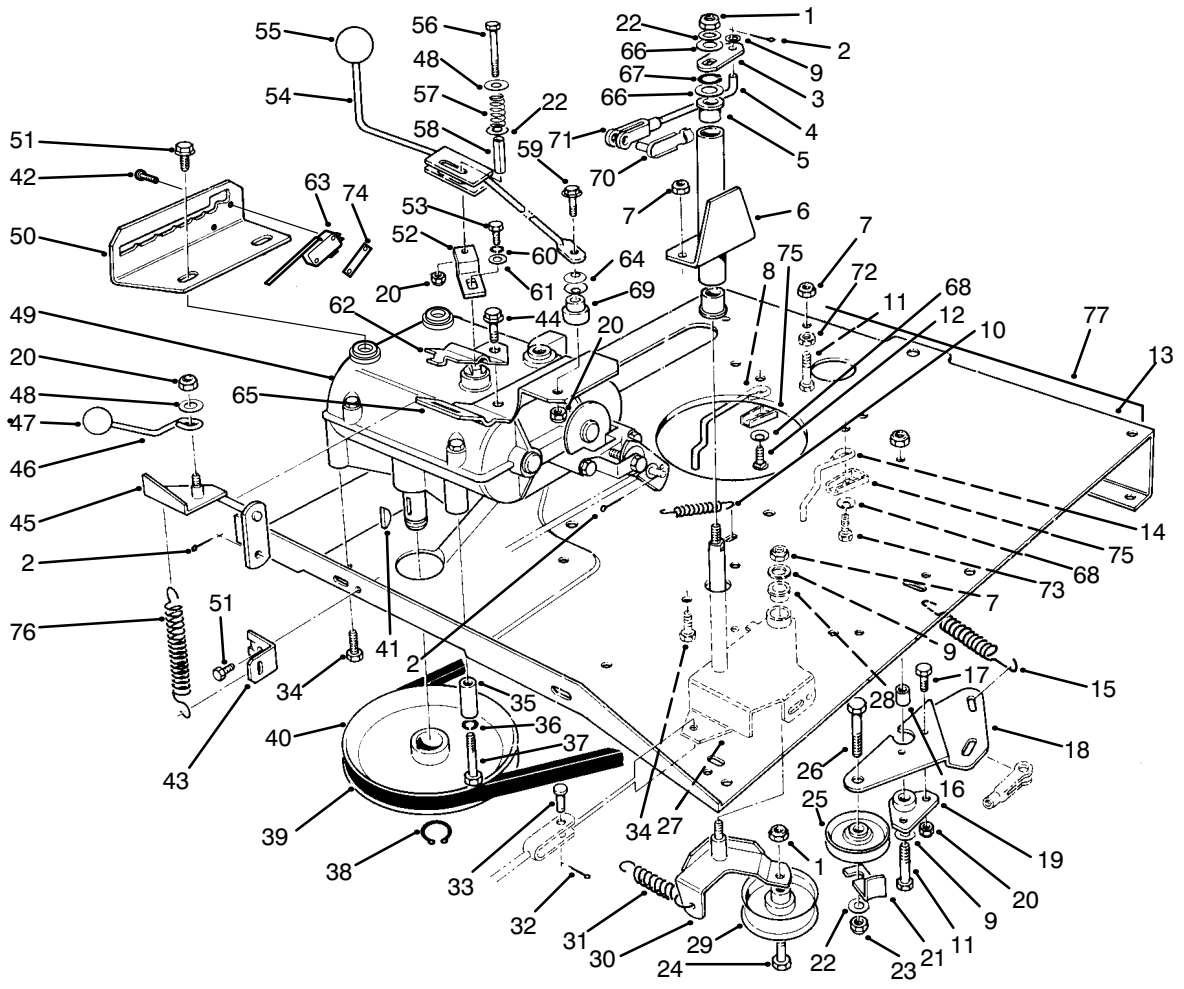

TRANSMISSION & LINKAGE ASSEMBLY (CONTINUED)

Ref. No.	Part No.	Description	No. Used
47	233−22	Knob	1
48	3256−55	Washer − Fender	2
49	67−1400	Transmission	1
50	88−9810−03	Gate − Shift	1
51	32144−14	Screw − Wash. Hd., Tap.	4
52	56−7620	Lever − Shift	1
53	329−4	Screw − Cap Hex. Hd.	1
54	76−3940−03	Lever W.A. − Shift	1
55	233−48	Knob	1
56	321−15	Screw − Cap Hex. Hd.	1
57	56−7730	Spring	1
58	56−7740	Spacer	1
59	321−8	Screw − Cap Hex. Hd.	1
60	3253−3	Washer − Lock	1
61	3256−22	Washer − Flat	5
62	67−0670	Bracket − Engage, Deck	1

Ref. No.	Part No.	Description	No. Used
63	88−9930	Switch − Micro	1
64	3290−478	Washer − Belleville	2
65	67−0660	Bracket − Mount, Shifter	1
66	20−3220	Washer − Flat	2
67	32151−62	Ring − Retaining	1
68	3290−456	Washer − Belleville	2
69	76−3970	Spacer − Pivot	1
70	67−1530	Assembly − Pin, Clevis	1
71	282−27	Clevis	1
72	3218−2	Nut − Jam	1
73	32144−26	Screw − Thread Forming	1
74	3290−354	Nut − Double	1
75	76−3820	Anchor − Guide, Belt	2
76	76−4660	Spring	1
77	76−3860	Decal	1

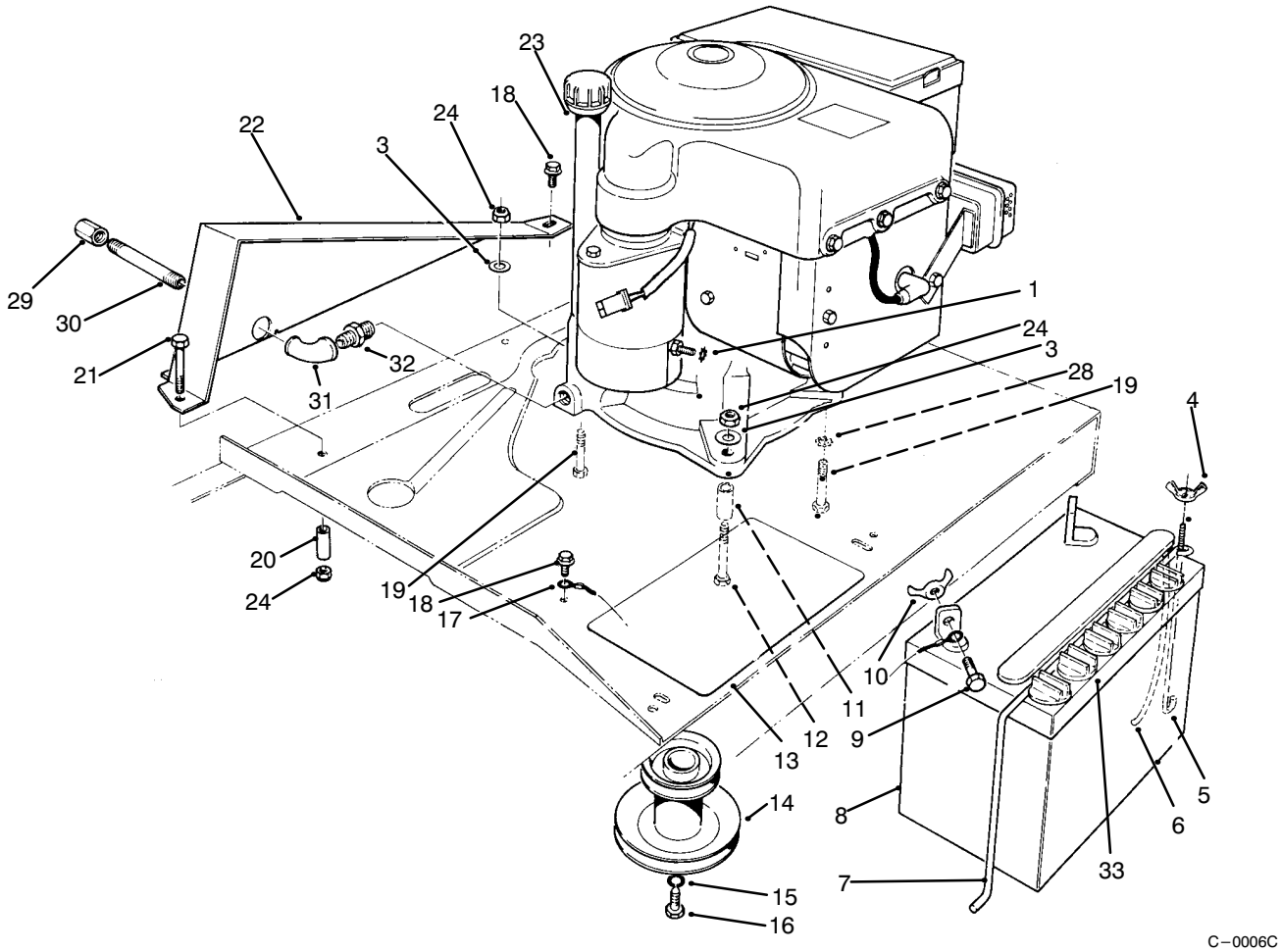

ENGINE ASSEMBLY

Ref. No.	Part No.	Description	No. Used
1	3255−7	Washer − Lock, Int. Tooth	1
3	3256−23	Washer − Flat	4
4	32103−14	Nut − Wing	1
5	56−7720	Post − Hold Down, Battery	1
6	56−2540	Tube − Drain	1
7	56−7710	Hold Down − Battery	1
8	80−2600	Battery 12V	1
9	321−4	Screw − Cap Hex. Hd.	2
10	32103−22	Nut − Wing	2
11	80−4560	Spacer	1
12	322−12	Screw − Cap Hex. Hd.	1
13	62−4300	Pad − Anti−Skid	1
14	83−4840	Pulley − Engine	1
15	3256−25	Washer − Flat	1
16	62−3760	Screw − Cap Hex. Hd.	1

Ref. No.	Part No.	Description	No. Used
17	56−7870	Assembly − Wire Battery to Ground	2
18	32144−14	Screw − Self Tapping	2
19	322−7	Screw − Cap Hex. Hd.	3
20	67−0920	Guide − Belt	1
21	322−10	Screw − Cap Hex. Hd.	1
22	67−0962−01	Guard − Chain	1
23		Engine − 8 H.P. B & S	1
24	3296−29	Nut − Lock	5
28	3255−8	Washer − Lock	4
29	288−2	Cap − Pipe	1
30	289−34	Nipple − Pipe	1
31	2811−17	Elbow − Street	1
32	2812−1	Reducer	1
33	84−8470	Cap − Battery	6

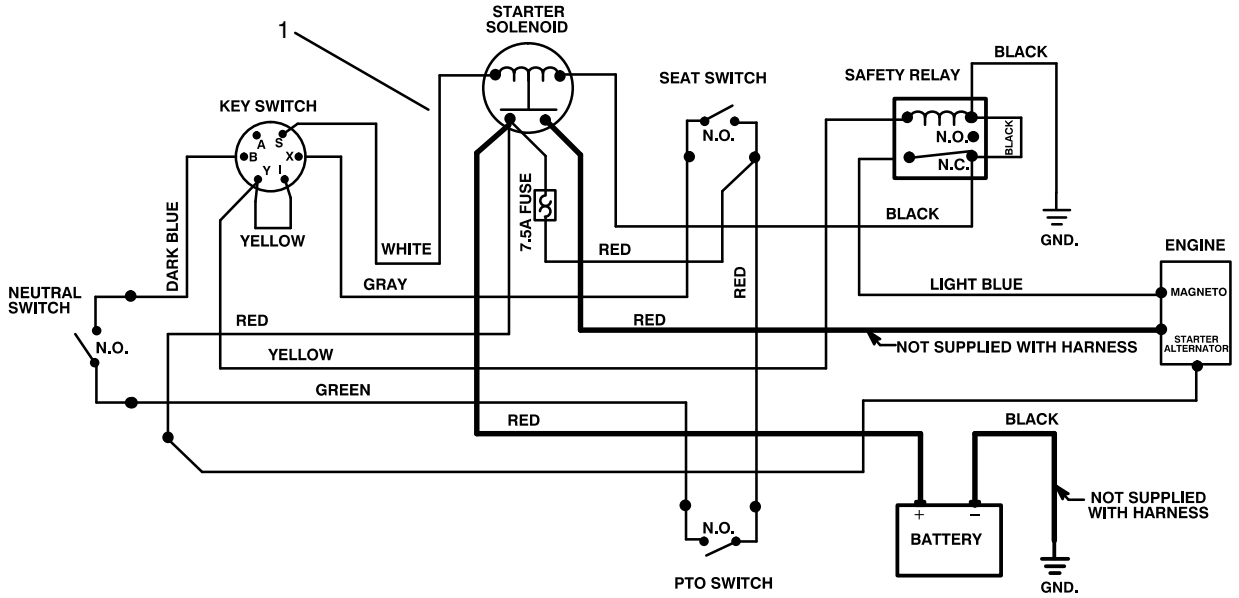

C−1578

ELECTRICAL SCHEMATIC

Ref. No.	Part No.	Description	No. Used
1	88−9870	Harness − Wire	1

Ref. No.	Part No.	Description	No. Used

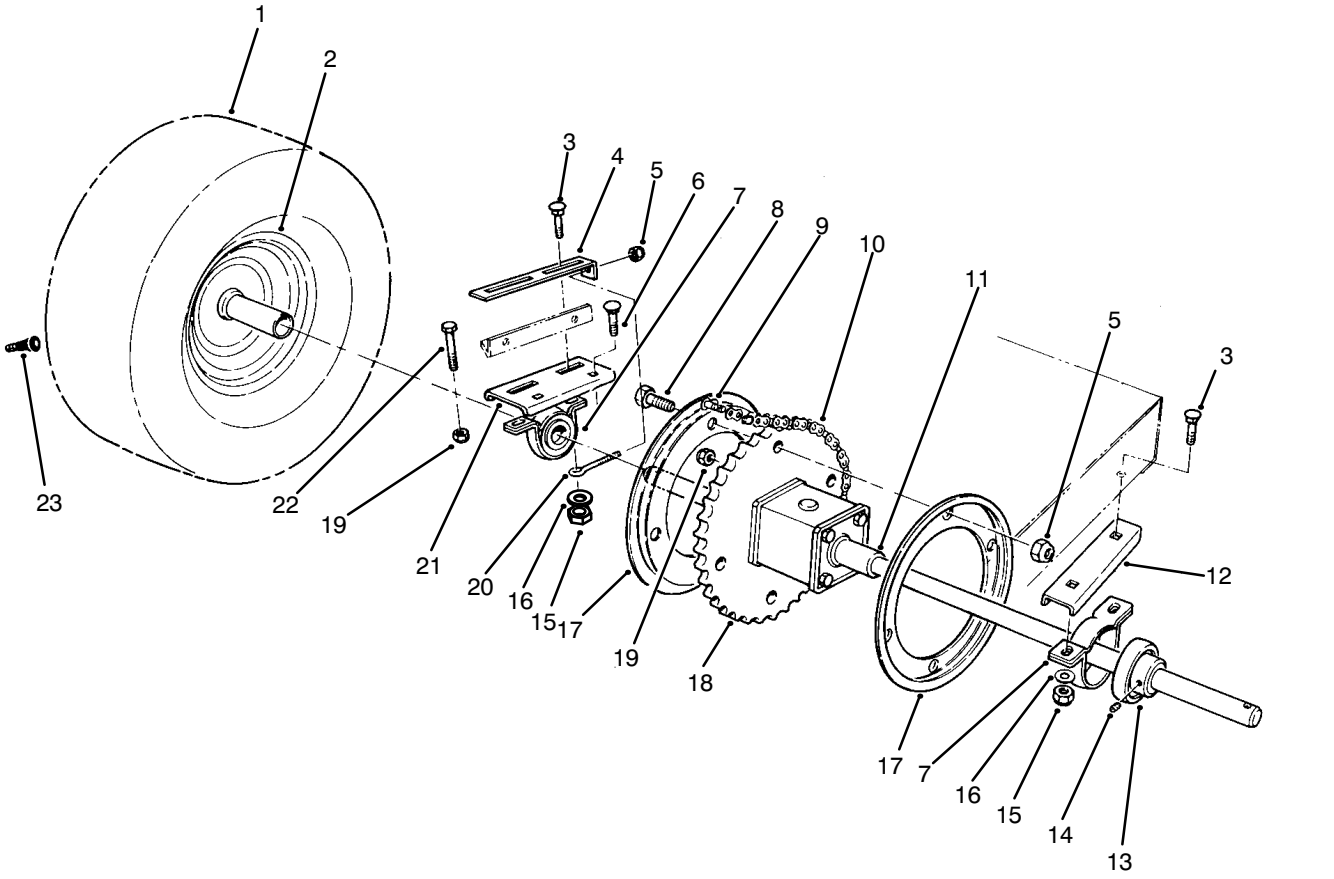

C−0008A

REAR AXLE ASSEMBLY

Ref. No.	Part No.	Description	No. Used
1	231−115	Tire	2
2	44−9760	Rim	2
3	3231−4	Bolt − Carriage	2
4	61−9990	Plate − Adjusting	1
5	3296−42	Nut − Lock	5
6	3231−25	Bolt − Carriage	4
7	47−1480	Mount − Bearing	2
8	321−4	Screw − Cap Hex. Hd.	4
9	2710−11	Link − Connecting	1
10	67−0910	Chain (Incl. Ref. #9)	1
11	56−9960	Differential	1
12	66−6630−03	Support L.H.	1

Ref. No.	Part No.	Description	No. Used
13	47−1490	Bearing (Incl. Ref. #14)	2
14	3245−32	Screw − Set	4
15	3296−39	Nut − Lock	6
16	3256−24	Washer − Flat	4
17	76−1580−03	Guide − Chain	2
18	76−4010	Sprocket	1
19	3296−29	Nut − Lock	6
20	61−9980	Screw − Adjusting	1
21	66−6620−03	Support R.H.	1
22	46−2511	Bolt − Axle	2
23	232−27	Valve Stem w/Cap	2
*	11−0410	Kit − Tire Chains (Optional)	1

*Not Illustrated

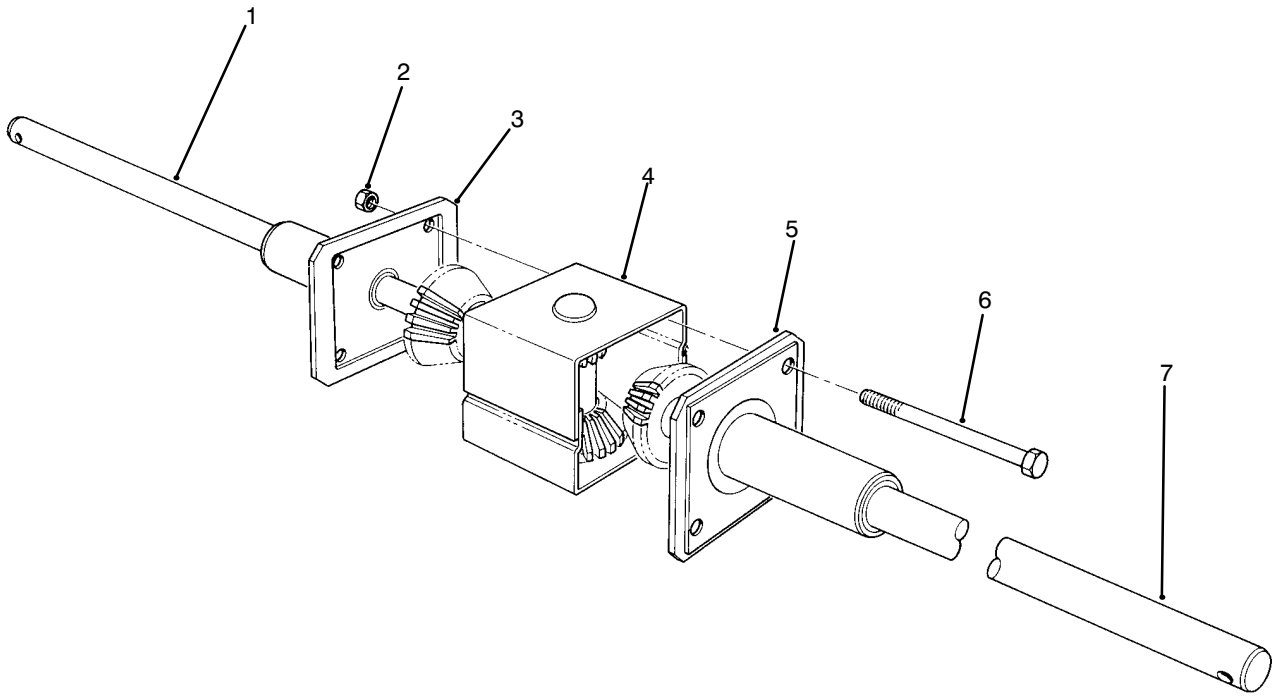

C−0010

DIFFERENTIAL ASSEMBLY

Ref. No.	Part No.	Description	No. Used
1	55−7762	Axle − R.H.	1
2	32152−1	Nut − Lock	4
3	55−7770	Cap − End, R.H.	1
4	55−7780	Case − Gear, Transfer	1

Ref. No.	Part No.	Description	No. Used
5	55−7771	Cap − End, L.H.	1
6	322−22	Screw − Cap Hex. Hd.	4
7	55−7763	Axle − L.H.	1
*	56−9960	Differential − Complete	1

*Not Illustrated

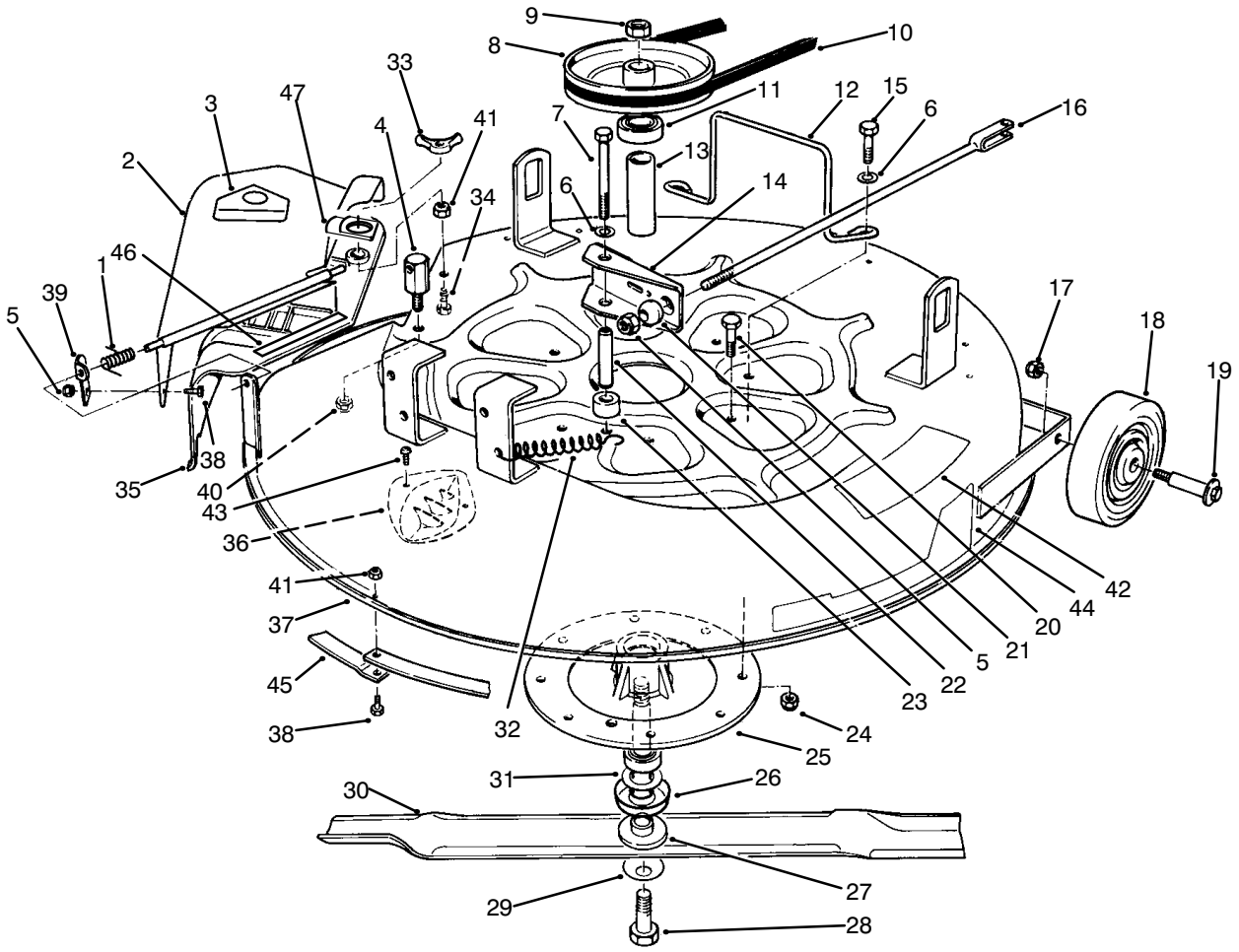

C−0728A

CUTTING UNIT ASSEMBLY

Ref. No.	Part No.	Description	No. Used
1	28−8010	Spring	1
2	67−1151−01	Deflector (Incl. Ref. #3)	1
3	54−9220	Decal − Danger	1
4	67−0140	Post − Pivot	1
5	3296−8	Nut − Lock	2
6	3256−23	Washer − Lock	3
7	322−22	Screw − Cap Hex. Hd.	1
8	80−4460	Pulley − Deck	1
9	3219−6	Nut − Hex.	1
10	67−1390	V−Belt	1
11	38−7820	Bearing − Ball	2
12	80−4520	Guide − Belt	1
13	62−3660	Spacer − Bearing	1
14	67−1370−01	Assy. − Brake, Deck	1
15	322−6	Screw − Cap Hex. Hd.	2
16	67−0570	Rod W.A. − Brake, Deck	1
17	3296−39	Nut − Lock	2
18	61−9760	Wheel − Deck	2
19	56−6590	Bolt − Wheel	2
20	322−3	Screw − Cap Hex. Hd.	6
21	67−0710	Ball − Swivel	1
22	67−0730	Post − Mount, Brake	1
23	67−0740	Spacer − Brake, Deck	1
24	3296−29	Nut − Lock	9

Ref. No.	Part No.	Description	No. Used
25	67−0970	Hub − Spindle	1
26	80−4360	Shield − Bearing	1
27	80−4340	Shaft − Spindle	1
28	26−0671	Bolt − Blade	1
29	3290−465	Washer − Belleville	1
30	80−4530	Blade	1
31	80−4380	Spacer − Spindle	1
32	67−1440	Spring − Brake	1
33	32109−14	Nut − Wing	1
34	3234−21	Screw − Cap Hex. Hd.	1
35	80−4450	Cover − Recycler	1
36	80−4510	Kicker	4
37	16−2199	Deck (Incl. Ref. #42)	1
38	321−4	Screw − Cap Hex. Hd.	9
39	67−1600−01	Bracket − Deflector	1
40	3296−59	Nut − Lock	1
41	3296−42	Nut − Lock	9
42	76−4070	Decal − Danger	1
43	32104−130	Screw − Special	8
44	82−6250	Decal − Recycler	1
45	80−4540−03	Ring − Deck, Recycler	4
46	68−3650	Decal − Warning	1
47	83−6610	Tab − Hold Down	1

BRIGGS & STRATTON MODEL NO. 191707–0121–01

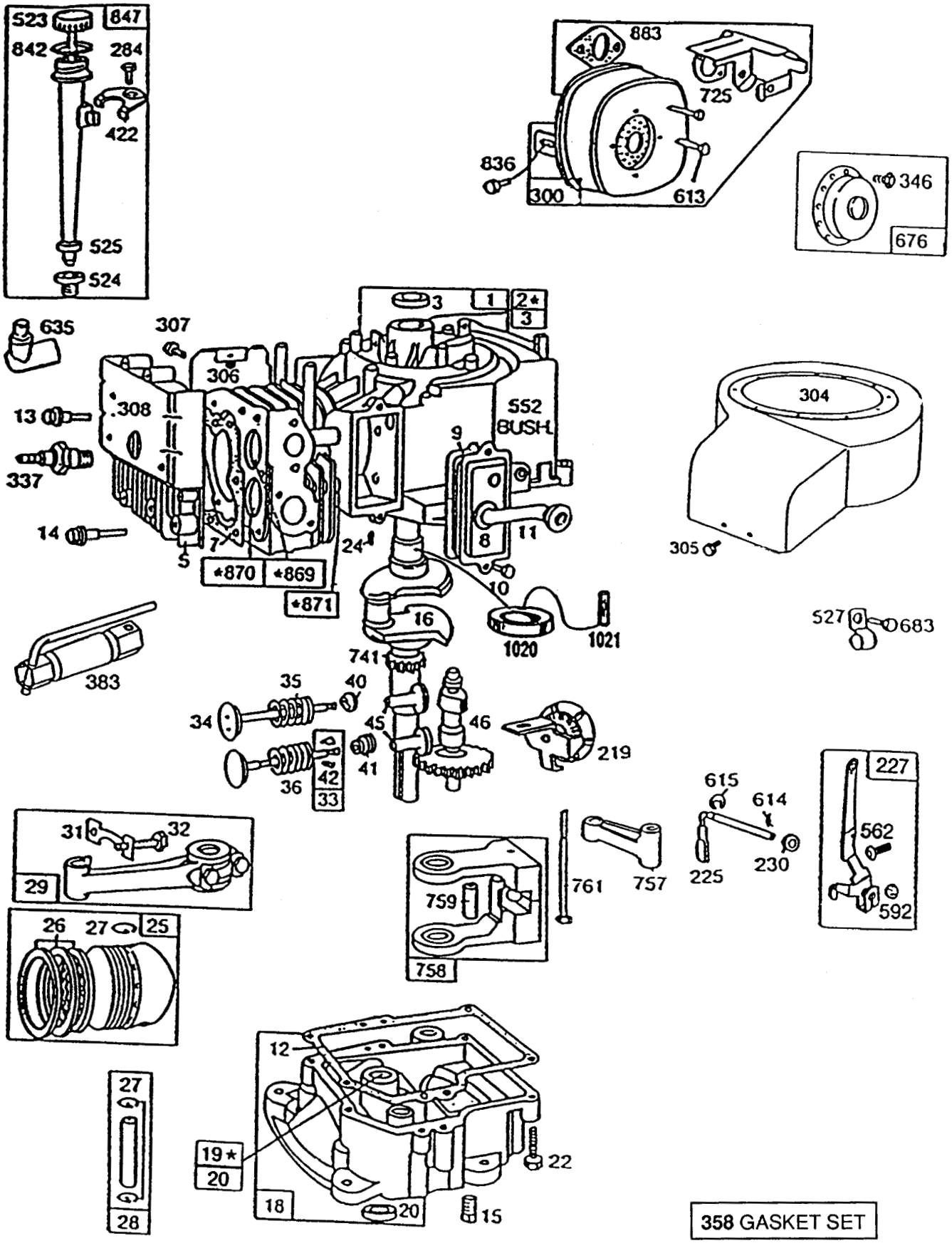

* REQUIRES SPECIAL TOOLS TO INSTALL. SEE REPAIR INSTRUCTION MANUAL.

Assemblies include all parts shown in frames.

C–1172

BRIGGS & STRATTON MODEL NO. 191707−0121−01

Ref. No.	Part No.	Description	No. Used
1	396269	Assembly − Cylinder	1
2	399267	Bearing − Cylinder Note: Requires special tools for installation.	1
3	294606	Seal − Oil	1
5	212286	Head − Cylinder	1
*7	272163	Gasket − Head, Cylinder	1
8	391406	Assembly − Breather	1
*9	27803	Gasket − Cover, Valve	1
10	94621	Screw	1
11	280005	Tube − Breather	1
*12	271701	Gasket − Cover, Crankcase 1/64” Thick	1
*	27876	Gasket − Cover, Crankcase .005” Thick	1
*	27877	Gasket − Cover, Crankcase .009” Thick	1
13	94565	Screw − Head, Cylinder	1
14	93723	Screw − Head, Cylinder (3” Long)	1
15	94239	Plug − Drain, Oil	1
16	396876	Crankshaft Note: Order Part 94388 for timing gear pin replacement.	1
18	392548	Base − Engine	1
19	295963	Bushing − Base, Engine Note: Requires special tool for installation.	1
20	391086	Seal − Oil	1
22	93585	Screw − Base, Mounting	1
24	222698	Key − Flywheel	1
25	391673	Assy. − Piston, Std.	1
	391674	Assy. − Piston, .010” O.S.	1
	391675	Assy. − Piston, .020” O.S.	1
	391676	Assy. − Piston, .030” O.S.	1
		PISTON RING SETS Note: For Chrome Piston Ring Set − Standard Size − Order No. 299743.	
26	391669	Ring Set − Piston, Std.	1
	391670	Ring Set − Piston, .010” O.S.	1
	391671	Ring Set − Piston, .020” O.S.	1
	391672	Ring Set − Piston, .030” O.S.	1
27	68546	Lock − Piston Pin	1
28	295840	Assy.− Piston Pin, Std.	1
	295841	Assy.− Piston Pin, .005” O.S.	1
29	390402	Assy.− Rod, Connecting Note: For Connecting Rod with .020” Undersize Crankpin Bore − Order No. 390773.	1
31	222114	Lock − Screw, Conn. Rod	1
32	92659	Screw − Connecting Rod	1
33	390419	Valve − Exhaust	1
34	261055	Valve − Intake	1
35	65906	Spring − Valve, Intake	1
36	26828	Spring − Valve, Exhaust	1
40	221596	Retainer − Valve, Intake	1
41	292260	Rotocoil − Valve, Exhaust	1
42	93630	Retainer − Valve, Exhaust Rotocoil	2
45	260933	Tappet − Valve	1
46	211689	Gear − Cam	1
225	231058	Crank − Gov. (1/4” Dia.)	1
227	43935	Assy. Lever − Governor for 1/4” Dia. Crank	1
230	222450	Washer − Lever, Governor (1/4” Inside Diameter)	1
284	94419	Screw − Clamp, Mounting	1
300	398507	Muffler − Exhaust	1
304	494084	Housing − Blower	1
305	94608	Screw − Blower Hsg., Sems	1
306	224543	Shield − Cylinder	1
307	93949	Screw − Shield, Cylinder	1
308	222636	Cover − Head, Cylinder	1
337	802592	Plug − Spark	1
346	93705	Screw	1
358	299577	Gasket Set	1
383	89838	Wrench − Spark Plug	1
422	223394	Clamp − Tube, Oil Filler	1
523	391840	Cap & Dipstick − Oil Filler	1
524	68838	Seal − Tube, Filler	1
525	280133	Tube − Filler, Oil	1
527	221428	Clamp	1
552	491986	Bushing − Crank, Gov.	1
562	92613	Bolt − Lever, Governor	1
592	231082	Nut − Hex.	1
613	94042	Screw − Muffler	1
614	93306	Pin − Hair, Cotter	1
615	93307	Retainer − E−Ring	1
635	66538	Elbow − Plug, Spark	1
676	395700	Deflector − Exhaust	1
683	93572	Screw	1
725	223540	Shield − Muffler	1
741	262479	Gear − Timing	1
757	212359	Link − Counterweight	1
758	390172	Assy. − Counterweight	1
759	298909	Pin − Counterweight	1
761	93874	Screw − Counterweight	1
836	93559	Screw	1
842	270920	Seal − Cap, Filler	1
847	392066	Filler Group − Oil	1
869	211661	Seat − Valve, Intake (Std.)	1
870	211661	Seat − Valve, Exhaust (Std.)	1
871	231218	Guide − Exhaust or Intake Valve, See repair manual	1
883	272309	Gasket − Pipe, Exhaust	1
1020	261190	Eccentric	1
1021	94160	Pin − Eccentric	1

*Included in Gasket Set − Part No. 299577.

BRIGGS & STRATTON MODEL NO. 191707–0121–01

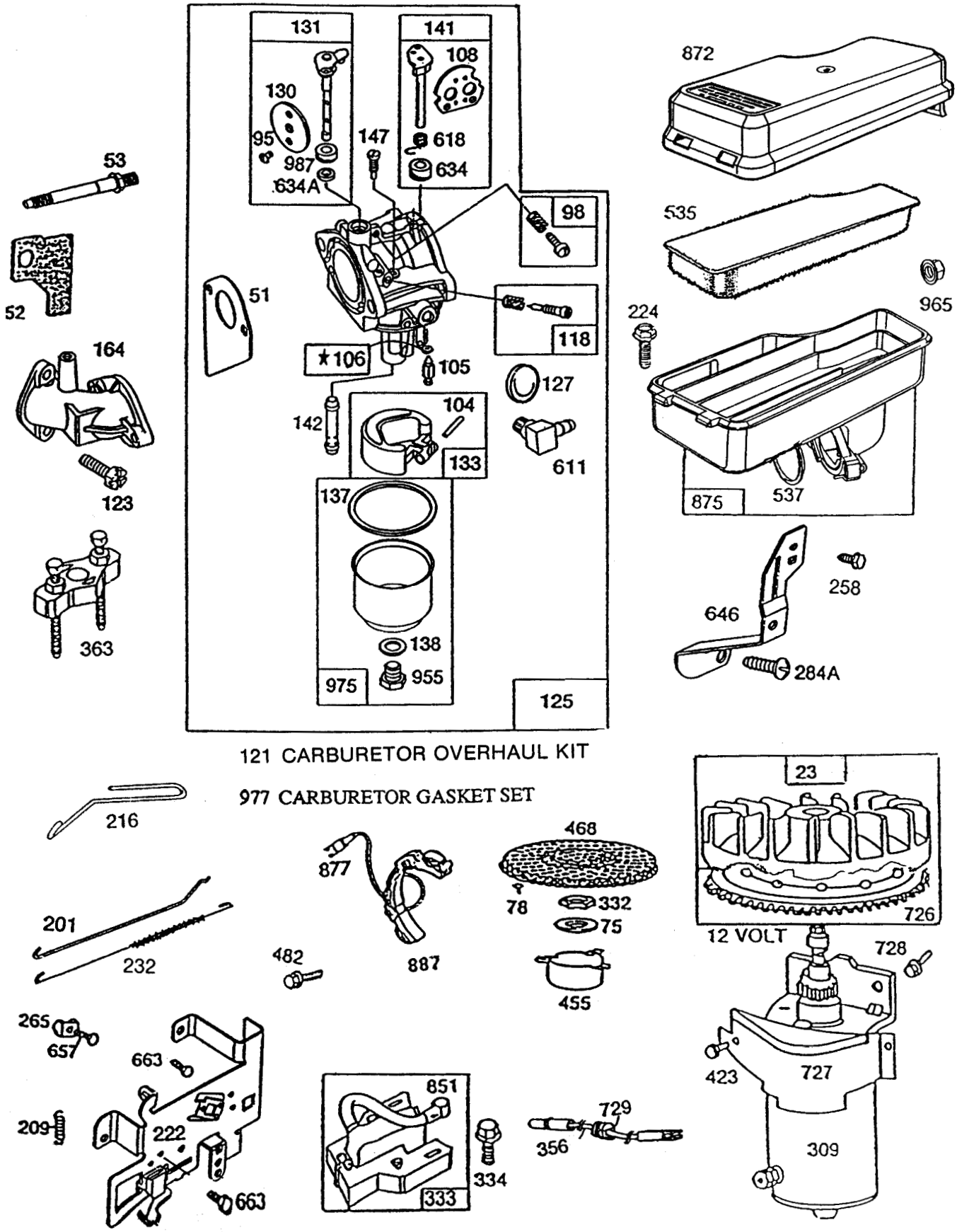

121 CARBURETOR OVERHAUL KIT

977 CARBURETOR GASKET SET

★ REQUIRES SPECIAL TOOLS TO INSTALL. SEE REPAIR INSTRUCTION MANUAL.

Assemblies include all parts shown in frames.

C–1173

BRIGGS & STRATTON MODEL NO. 191707–0121–01

Ref. No.	Part No.	Description	No. Used
223	391983	Flywheel and Ring Gear Assy. - Magneto (Incl. Aluminum Ring Gear)	1
*#51	272465	Gasket - Carburetor (Carb. to Elbow)	1
‡52	270824	Gasket - Carb. Mtg.	1
53	94637	Stud - Gasket Mtg.	1
75	224061	Washer - Spring	1
78	93805	Screw - Sem	1
*95	94098	Screw - Throttle	1
98	494382	Screw - Idle Speek	1
*104	231789	Pin - Float Hinge	1
*105	231790	Valve Assy. - Inlet Needle	1
*106	281169	Inlet Valve Seat	1
108	224540	Valve - Choke	1
118	494383	Valve - Needle	1
121	494880	Carburetor Overhaul Kit	1
123	94616	Screw - Carburetor Mtg.	1
125	494894	Carburetor Assembly	1
*127		Plug - Welch (Kit Only)	1
130	224668	Valve - Throttle	1
131	494885	Shaft & Lever - Throttle	1
133	494381	Float - Carburetor	1
*#137	281165	Gasket - Float Bowl	1
*#138	281164	Washer - Float Bowl	1
141	494380	Shaft & Lever - Choke	1
*142	494877	Nozzle - Carburetor	1
*147	231794	Screw - Nozzle	1
164	213819	Carburetor Elbow	1
201	262769	Link - Governor	1
209	260871	Spring - Governor	1
216	262768	Link - Choke	1
222	493896	Plate - Gov. Plate	1
224	94513	Screw - Sem	1
232	262787	Spring - Governor Link	1
258	94620	Screw - Hex. Tapping	1
265	221535	Clamp - Casing	1
284A	94326	Screw - Brace Mtg.	1

Ref. No.	Part No.	Description	No. Used
309		Motor - Starting (12 Volt) See Chart for Replacement Parts for Starting Motor on Illustrated Pages	1
332	92284	Nut - Flywheel	1
333	398811	Armature Assembly	1
334	93381	Screw - Armature Mtg. Sem	1
356	494328	Wire - Ground	1
363	19165	Puller - Flywheel	1
423	94073	Screw - Sem	1
455	222561	Cup - Screen Mounting	1
468	222562	Screen - Flush Rotating	1
482	93621	Screw - Sem	1
535	272405	Element - Foam Air Cleaner	1
537	281106	O-Ring - Air Cleaner	1
611	494451	Fuel Inlet Tube	1
618	262803	Spring - Choke Return	1
*634	281168	Seal - Choke Shaft	1
*634A	281167	Washer - Throttle Shaft	1
646	224614	Brace - Air Cleaner	1
657	93496	Screw - Sem	1
663	94419	Screw	1
726	392134	Gear - Ring (Aluminum) (Incl. Mtg. Parts)	1
727	395405	Cover - Starter (Incl. Mtg. Screws)	1
728	93535	Screw - Sem	1
729	281159	Clip - Lead Wire	1
851	221798	Terminal - Ignition Cable	1
872	281108	Cover - Air Cleaner	1
875	494745	Body - Air Cleaner	1
877	393814	Diode & Connector Assy.	1
887	391529	Stator Assembly - Alternator (D.C.)	1
955	94642	Screw - Fuel Bowl	1
965	94108	Nut - Lock	1
975	494378	Bowl Assy. - Carburetor	1
*987	281166	Seal - Throttle Shaft	1

*Included in Carburetor Overhaul Set - Part No. 494880.
#Included in Carburetor Gasket Set - Part No. 494385.
‡Included in Gasket Set - Part No. 299577.

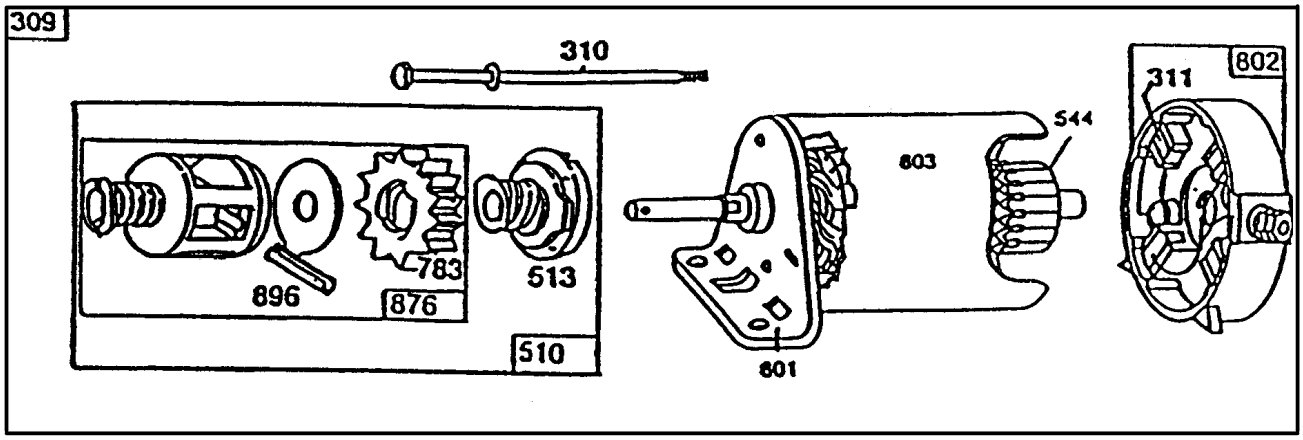

C−0784

STARTER − BRIGGS & STRATTON NO. 191707−0121−01

Ref. No.	Part No.	Description	No. Used
309	394805	Assembly − Motor & Drive	1
310	94003	Assembly − Thru Bolt	2
311	395538	Assembly − Brush	2
510	490421	Assembly − Drive (Incl. Ref. #513, 783, 876 & 896)	1
513	398003	Assembly − Clutch	1
544	390837	Assembly − Armature	1
783	280104	Gear	1

Ref. No.	Part No.	Description	No. Used
801	394856	Assembly − End Cap	1
802	395537	Assembly − Commutator, End Cap	1
803	398159	Assembly − Housing (3−21/32" Long)	1
876	490467	Kit − Retainer	1
896	94288	Pin − Roll	1

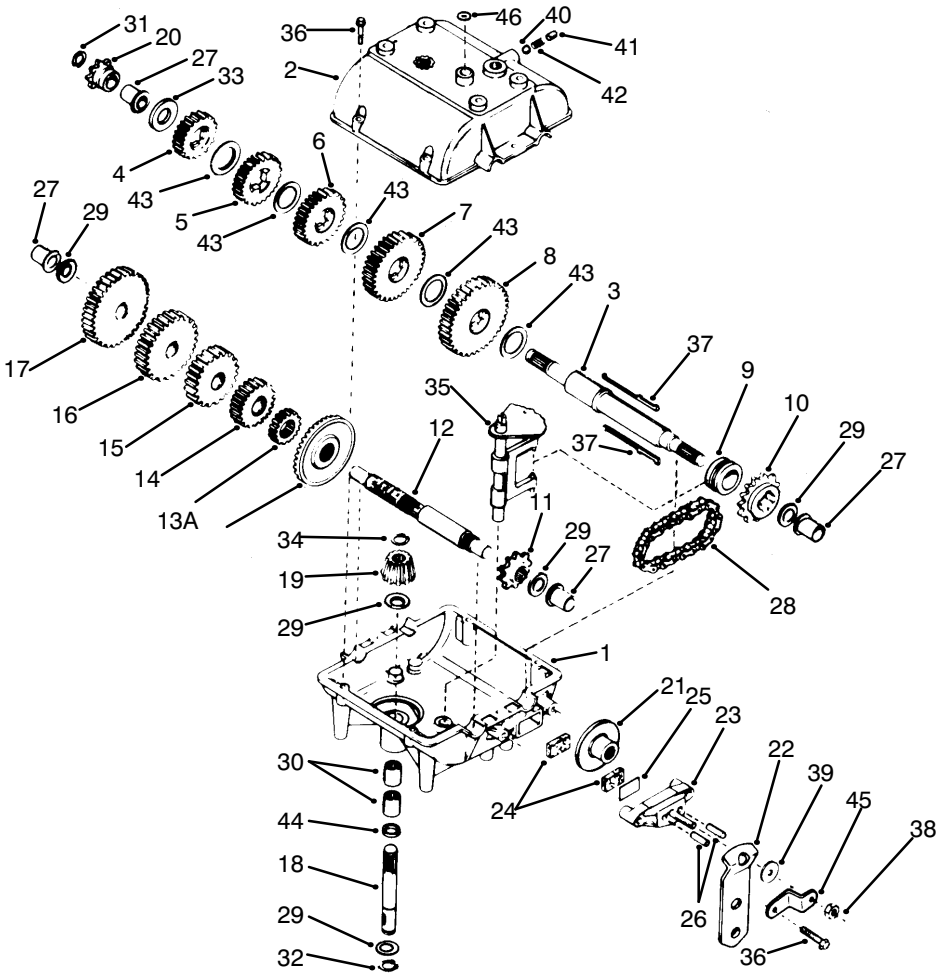

C−0441

TRANSMISSION PEERLESS MODEL 700−025

Ref. No.	Part No.	Description	No. Used
1	770061	Case − Transmission	1
2	772083	Cover − Transmission	1
3	776217	Shaft − Output	1
4	778121A	Gear − Spur (20 Teeth)	1
5	778122A	Gear − Spur (22 Teeth)	1
6	778123A	Gear − Spur (25 Teeth)	1
7	778124A	Gear − Spur (30 Teeth)	1
8	778125	Gear − Spur (35 Teeth)	1
9	784266	Collar − Shift	1
10	786083	Sprocket (18 Teeth)	1
11	786082	Sprocket (9 Teeth)	1
12	776134	Shaft − Counter	1
13	788137A	Gear − Bevel (42 Teeth)	1
13A	778136	Gear − Spur (15 Teeth)	1
14	778126A	Gear − Spur (20 Teeth)	1
15	778127A	Gear − Spur (25 Teeth)	1
16	778128A	Gear − Spur (28 Teeth)	1
17	778129A	Gear − Spur (30 Teeth)	1
18	776135	Shaft − Input	1
19	778113A	Bevel − Pinion, Input	1
20	786047	Sprocket (8 Teeth)	1
21	790003	Disk − Brake	1
22	790008A	Lever − Brake	1
23	790025	Holder − Pad, Brake	1

Ref. No.	Part No.	Description	No. Used
24	790006	Pad − Brake	2
25	790007	Plate − Pad, Brake	1
26	786026	Pin − Dowel	2
27	780105A	Bushing − Flange	4
28	786081	Chain − Roller (No. 41 Chain, 24 Links)	1
29	780072	Washer − Thrust	5
30	780086	Bearing − Needle	2
31	792072	Ring − Retaining	1
32	792035	Ring − Retaining	1
33	780109	Washer	1
34	788040	Ring − Retaining	1
35	784267	Assy. Rod & Fork − Shift	1
36	792073	Screw − Thread Forming	8
37	792089A	Key	2
38	792075	Nut − Lock	1
39	792076	Washer	1
40	792077	Ball − Steel	1
41	792078	Screw − Set	1
42	792079	Spring	1
43	780108	Washer − Thrust	5
44	792001	O−Ring	1
45	786086	Bracket − Lever, Brake	1
46	788069	Seal − Square Cut	1

TORO PART NUMBER INDEX

Part No.	Description	Pg. No.	Ref. No.	Qty.
116397	Relay	5	17	1
147665	Screw − Tapping	6	42	2
11−0410	Kit − Tire Chains (Optional)	10	*	1
12−5820	Pulley − Idler, Traction	6	25	1
12−9020	Retainer − Belt	6	21	1
13−6049	Kit − Loose parts	2	*	1
16−2199	Deck	12	37	1
18−2970	R−Clamp	3	4	1
19−1470	Bolt − Shoulder	1	18	1
19−1610−03	Lever − Brake, Parking	1	19	1
19−1970	Spring − Brake, Parking	1	13	1
19−2200	Tip − Brake, Parking	1	20	1
20−3220	Washer − Flat	7	66	2
26−0671	Bolt − Blade	12	28	1
26−6700	Spring − Return, Brake	6	10	1
26−9530	Washer − Pivot	1	8	1
28−0540	Bolt − Shoulder	5	18	1
28−2480	Washer − Flat	4	2	2
28−8010	Spring	12	1	1
38−1420	Switch − Seat	3	3	1
38−7820	Bearing − Ball	12	11	2
40−8200	Switch − Micro	5	27	1
44−7030	Tread − Foot Rest	1	3	2
44−7140−01	Mount − Bearing, Axle	2	2	1
44−9760	Rim	10	2	2
46−2511	Bolt − Axle	10	22	2
46−2511	Bolt − Mounting, Axle	2	19	2
47−1480	Mount − Bearing	10	7	2
47−1490	Bearing	10	13	2
47−1910	Solenoid	5	31	1
47−2964	Hose − Gas	3	9	2
47−2986	Hose − Gas	3	5	1
49−3241	Wheel − Steering	2	34	1
54−9220	Decal − Danger	12	3	1
55−3576	Assembly − Cap, Gas	3	8	1
55−7101	Tower	1	22	1
55−7762	Axle − R.H.	11	1	1
55−7763	Axle − L.H.	11	7	1
55−7770	Cap − End, R.H.	11	3	1
55−7771	Cap − End, L.H.	11	5	1
55−7780	Case − Gear, Transfer	11	4	1
56−2540	Tube − Drain	8	6	1
56−6360	Filter	3	10	1
56−6590	Bolt − Wheel	12	19	2
56−7620	Lever − Shift	7	52	1
56−7710	Hold Down − Battery	8	7	1
56−7720	Post − Hold Down, Battery	8	5	1
56−7730	Spring	7	57	1
56−7740	Spacer	7	58	1
56−7870	Assembly − Wire	8	17	2
56−9870	Pulley − Idler, Deck	6	29	1
56−9960	Differential	10	11	1
56−9960	Differential − Complete	11	*	1
61−9760	Wheel − Deck	12	18	2
61−9780	Cap − Hub	4	1	2
61−9980	Screw − Adjusting	10	20	1
61−9990	Plate − Adjusting	10	4	1
62−3660	Spacer − Bearing	12	13	1
62−3760	Screw − Cap Hex. Hd.	8	16	1
62−4300	Pad − Anti−Skid	8	13	1
63−8360	Key	5	40	2
65−2920	Pad − Pedal	1	17	2
66−6620−03	Support R.H.	10	21	1
66−6630−03	Support L.H.	10	12	1
66−6640	Control − Throttle	5	34	1
66−6680	Seat	3	1	1
66−6920	Pad − Isolator	3	17	2
67−0010−01	Lift W.A. − Front, Deck	2	5	1
67−0050−01	Tube W.A. − Support, Rear	2	11	1
67−0080	Link − H.O.C.	5	23	1
67−0090−03	Bracket − Link, H.O.C.	2	10	1
67−0140	Post − Pivot	12	4	1
67−0231−01	Body W.A. − Rear	5	13	1
67−0270	Handle W.A. − H.O.C.	5	21	1
67−0300−01	Lever W.A. − H.O.C.	2	18	2
67−0330−03	Idler − Plate, Mount	6	30	1
67−0360−03	Bracket − Arm, Idler	6	27	1
67−0400	Mount − Pivot	6	19	1
67−0410	Spacer − Pivot	6	16	1
67−0420−03	Plate − Mount, Idler	6	18	1
67−0430	Rod − Clutch	2	6	1
67−0440	Spacer − Steering	2	32	1
67−0450−01	Frame W.A. − Front	2	25	1
67−0520−01	Channel − R.H.	2	3	1
67−0530−01	Channel − L.H.	2	24	1
67−0540−03	Tube W.A. − Pivot	6	6	1
67−0570	Rod W.A. − Brake, Deck	12	16	1
67−0600−03	Lever W.A. − Deck Engage	6	45	1
67−0640	Handle − Deck Engage	6	46	1
67−0660	Bracket − Mount, Shifter	7	65	1
67−0670	Bracket − Engage, Deck	7	62	1
67−0690−03	Flat − Deck Engage	6	3	1
67−0710	Ball − Swivel	12	21	1
67−0730	Post − Mount, Brake	12	22	1
67−0740	Spacer − Brake, Deck	12	23	1
67−0750−01	Bracket − Mount, Spring	6	43	1
67−0790−03	Support W.A. − Seat	5	10	1
67−0800−01	Spindle − R.H.	4	15	1
67−0810−01	Spindle − L.H.	4	12	1
67−0830−03	Shaft W.A. − Steering	2	26	1
67−0850	Bushing − Steering	2	29	2
67−0860	Washer − Steering	2	30	1
67−0870	Bolt − Shoulder	5	22	2
67−0870	Bolt − Shoulder	2	27	2
67−0880	Assembly − Tie Rod	4	11	2
67−0900	Belt − Traction	6	39	1
67−0910	Chain	10	10	1
67−0920	Guide − Belt	8	20	1
67−0920	Guide − Belt	6	35	1
67−0930	Guide R.H. − Belt, Engine	6	8	1
67−0940	Guide L.H. − Belt, Engine	6	14	1
67−0950	Strap − Tank, Gas	3	6	2
67−0962−01	Guard − Chain	8	22	1
67−0970	Hub − Spindle	12	25	1
67−0990−01	Axle − Front	4	9	1
67−1030	Cover − Panel, Control	5	42	1
67−1070−01	Body W.A. − Front	1	15	1
67−1090−01	Support W.A. − Seat	5	29	1
67−1130−03	Pedal − Brake & Clutch	1	14	2
67−1151−01	Deflector	12	2	1
67−1241−01	Base − Seat	3	2	1
67−1270	Decal − Panel, Control	5	39	1
67−1330−03	Lever − Brake, Bellcrank	1	10	1
67−1340	Rod − Brake, Transmission	1	9	1
67−1350	Rod − Front, Brake	1	12	1
67−1370−01	Assy. − Brake, Deck	12	14	1
67−1390	V−Belt	12	10	1
67−1400	Transmission	7	49	1
67−1430	Spring − Compression	1	7	1
67−1440	Spring − Brake	12	32	1
67−1450	Spring − Extension	1	11	1
67−1460	Washer − Flat	2	15	2
67−1480	Brace − Support, Seat	5	8	2
67−1500−03	Bar − Stand	5	5	1
67−1510−03	Brace − Stop, Deck	2	13	2
67−1530	Assembly − Pin, Clevis	7	70	1
67−1590	Bracket − Brake Return	1	6	1
67−1600−01	Bracket − Deflector	12	39	1
67−9170	Spring	6	31	1
68−3650	Decal − Warning	12	46	1
68−8370	Link − Deck Engage	6	4	1
68−8380	Spacer − Stop, Deck	2	17	2
68−9950	Spring − Traction	6	15	1
71−8310	Spring − Prop, Seat	5	1	1
76−1580−03	Guide − Chain	10	17	2
76−1620	Decal − Instruction	1	1	1
76−3820	Anchor − Guide, Belt	7	75	2
76−3840	Decal − Toro L.H.	5	12	1
76−3850	Decal − Front	5	14	1
76−3860	Decal	7	77	1
76−3870	Decal	1	21	1
76−3880	Decal − Toro R.H.	5	*	1
76−3920	Decal − H.O.C./Deck Engage.	5	24	1
76−3940−03	Lever W.A. − Shift	7	54	1
76−3970	Spacer − Pivot	7	69	1
76−4010	Sprocket	10	18	1
76−4070	Decal − Danger	12	42	1
76−4080	Decal	2	36	1
76−4090−01	Plate − Engine	6	13	1
76−4660	Spring	7	76	1
80−2600	Battery 12V	8	8	1
80−4330	Prop − Seat	5	32	1

*Not Illustrated

TORO PART NUMBER INDEX (Cont.)

Part No.	Description	Pg. No.	Ref. No.	Qty.
80−4340	Shaft − Spindle	12	27	1
80−4360	Shield − Bearing	12	26	1
80−4380	Spacer − Spindle	12	31	1
80−4450	Cover − Recycler	12	35	1
80−4460	Pulley − Deck	12	8	1
80−4510	Kicker	12	36	4
80−4520	Guide − Belt	12	12	1
80−4530	Blade	12	30	1
80−4540−03	Ring − Deck, Recycler	12	45	4
80−4550	Rod − Base, Seat	5	33	1
80−4560	Spacer	8	11	1
80−4580	Tank − Gas	3	7	1
82−6250	Decal − Recycler	12	44	1
82−6260	Decal − Recylcer	1	23	1
82−6450	Pulley − Transmission	6	40	1
83−4840	Pulley − Engine	8	14	1
83−6610	Tab − Hold Down	12	47	1
84−8470	Cap − Battery	8	33	6
88−9810−03	Gate − Shift	7	50	1
88−9830	Switch − Ignition	5	36	1
88−9840	Insert − Wheel, Steering	2	35	1
88−9870	Harness − Wire	9	1	1
88−9930	Switch − Micro	7	63	1
217−80	Rim	4	5	2
218−461	Nut − Hex.	5	38	1
231−115	Tire	10	1	2
231−116	Tire	4	3	2
232−27	Valve Stem w/Cap	4	17	2
232−27	Valve Stem w/Cap	10	23	2
233−22	Knob	5	25	1
233−22	Knob	7	47	1
233−48	Knob	7	55	1
233−59	Knob	5	35	1
2412−98	Clamp − Hose	3	11	5
251−210	Bearing	4	16	4
256−90	Bushing	6	5	3
256−155	Bushing	6	28	1
2710−11	Link − Connecting	10	9	1
282−27	Clevis	2	7	1
282−27	Clevis	7	71	1
283−67	Pin − Clevis	6	33	1
288−2	Cap − Pipe	8	29	1
289−34	Nipple − Pipe	8	30	1
2811−17	Elbow − Street	8	31	1
2812−1	Reducer	8	32	1
302−67	Fitting − Grease	4	4	4
321−4	Screw − Cap Hex. Hd.	10	8	4
321−4	Screw − Cap Hex. Hd.	8	9	2
321−4	Screw − Cap Hex. Hd.	6	17	2
321−4	Screw − Cap Hex. Hd.	12	38	9
321−8	Screw − Cap Hex. Hd.	7	59	1
321−15	Screw − Cap Hex. Hd.	7	56	1
322−3	Screw − Cap Hex. Hd.	2	1	6
322−3	Screw − Cap Hex. Hd.	5	9	4
322−3	Screw − Cap Hex. Hd.	3	14	4
322−3	Screw − Cap Hex. Hd.	12	20	6
322−3	Screw − Cap Hex. Hd.	6	34	5
322−5	Screw − Cap Hex. Hd.	5	7	4
322−6	Screw − Cap Hex. Hd.	6	11	1
322−6	Screw − Cap Hex. Hd.	12	15	2
322−7	Screw − Cap Hex. Hd.	8	19	3
322−10	Screw − Cap Hex. Hd.	8	21	1
322−10	Screw − Cap Hex. Hd.	6	37	1
322−12	Screw − Cap Hex. Hd.	8	12	1
322−14	Screw − Cap Hex. Hd.	2	23	2
322−22	Screw − Cap Hex. Hd.	11	6	4
322−22	Screw − Cap Hex. Hd.	12	7	1
323−8	Screw − Cap Hex. Hd.	6	26	1
323−10	Screw − Cap Hex. Hd.	2	16	2
323−10	Screw − Cap Hex. Hd.	6	24	1
329−4	Screw − Cap Hex. Hd.	7	53	1
3218−1	Nut − Jam	5	16	2
3218−2	Nut − Jam	7	72	1
3219−6	Nut − Hex.	12	9	1
3230−2	Bolt − Carriage	6	12	1
3230−3	Bolt − Carriage	5	3	2
3230−20	Bolt − Carriage	5	11	1
3230−20	Bolt − Carriage	3	16	6
3231−4	Bolt − Carriage	10	3	2
3231−25	Bolt − Carriage	10	6	4
3234−21	Screw − Cap Hex. Hd.	12	34	1
3245−32	Screw − Set	10	14	4
3253−3	Washer − Lock	7	60	1
3253−4	Washer − Lock	6	36	1
3254−5	Washer − Lock, Int. Tooth	5	37	1
3255−7	Washer − Lock, Int. Tooth	8	1	1
3255−7	Washer − Lock, Int. Tooth	5	15	2
3255−8	Washer − Lock	8	28	4
3256−14	Washer − Flat	5	45	1
3256−22	Washer − Flat	5	4	1
3256−22	Washer − Flat	7	61	5
3256−23	Washer − Flat	8	3	4
3256−23	Washer − Flat	5	6	4
3256−23	Washer − Flat	6	9	3
3256−23	Washer − Flat	3	15	8
3256−23	Washer − Lock	12	6	3
3256−24	Washer − Flat	10	16	4
3256−24	Washer − Flat	6	22	3
3256−25	Washer − Flat	8	15	1
3256−26	Washer − Flat	4	13	1
3256−29	Washer − Flat	2	21	2
3256−55	Washer − Fender	7	48	2
3257−23	Key	6	41	1
3272−6	Pin − Cotter	6	2	1
3272−6	Pin − Cotter	2	9	2
3272−12	Pin − Cotter	4	18	2
3272−23	Pin − Cotter	2	20	2
3274−4	Pin − Cotter	5	43	1
3274−4	Pin − Cotter	6	32	1
3290−134	Screw − Cap Mach. Hd.	5	46	1
3290−250	PIn − Hair, Cotter	2	22	1
3290−250	Pin − Hair, Cotter	1	16	2
3290−313	Screw − Pan Head	5	26	2
3290−347	Nut − U−Type	1	5	4
3290−354	Nut − Double	5	28	1
3290−354	Nut − Double	7	74	1
3290−355	Pin − Hair, Cotter	2	14	2
3290−378	Tie − Cable	3	13	1
3290−413	Washer − Belleville	5	19	7
3290−413	Washer − Belleville	2	28	4
3290−456	Washer − Belleville	7	68	2
3290−465	Washer − Belleville	12	29	1
3290−478	Washer − Belleville	7	64	2
3296−2	Nut − Lock	5	44	1
3296−4	Nut − Lock	4	8	4
3296−8	Nut − Lock	12	5	2
3296−25	Nut − Lock	4	14	1
3296−29	Nut − Lock	1	2	5
3296−29	Nut − Lock	5	2	11
3296−29	Nut − Lock	2	4	16
3296−29	Nut − Lock	6	7	8
3296−29	Nut − Lock	3	12	4
3296−29	Nut − Lock	10	19	6
3296−29	Nut − Lock	12	24	9
3296−29	Nut − Lock	8	24	5
3296−39	Nut − Lock	6	1	2
3296−39	Nut − Lock	2	12	5
3296−39	Nut − Lock	10	15	6
3296−39	Nut − Lock	12	17	2
3296−39	Nut − Lock	5	20	1
3296−42	Nut − Lock	10	5	5
3296−42	Nut − Lock	6	20	5
3296−42	Nut − Lock	5	30	2
3296−42	Nut − Lock	12	41	9
3296−59	Nut − Lock	6	23	1
3296−59	Nut − Lock	12	40	1
32103−14	Nut − Wing	8	4	1
32103−22	Nut − Wing	8	10	2
32104−110	Screw − Cap Hex. Hd.	1	4	4
32104−130	Screw − Special	12	43	8
32109−14	Nut − Wing	12	33	1
32120−64	Ring − Retaining	6	38	1
32121−32	Pin − Roll	2	31	1
32121−78	Pin − Roll	2	33	1
32144−14	Screw − Self Tapping	8	18	2
32144−14	Screw − Wash. Hd., Tap.	7	51	4
32144−26	Screw − Thread Forming	7	73	1
32144−42	Screw − Hex. Hd. Tapping	5	41	4
32144−70	Screw − Hex. Hd. Tapping	6	44	1
32151−48	Ring − Retaining	4	6	2
32151−62	Ring − Retaining	7	67	1
32152−1	Nut − Lock	11	2	4

*Not Illustrated