FORM NO. 3315–764A

TORO®

MODEL NO. 70042–3900001 & UP
MODEL NO. 70080–3900001 & UP
MODEL NO. 70120–3900001 & UP
MODEL NO. 70140–3900001 & UP

PARTS CATALOG

WHEEL HORSE®

8–32, 10–32 & 12–32 RIDING MOWER

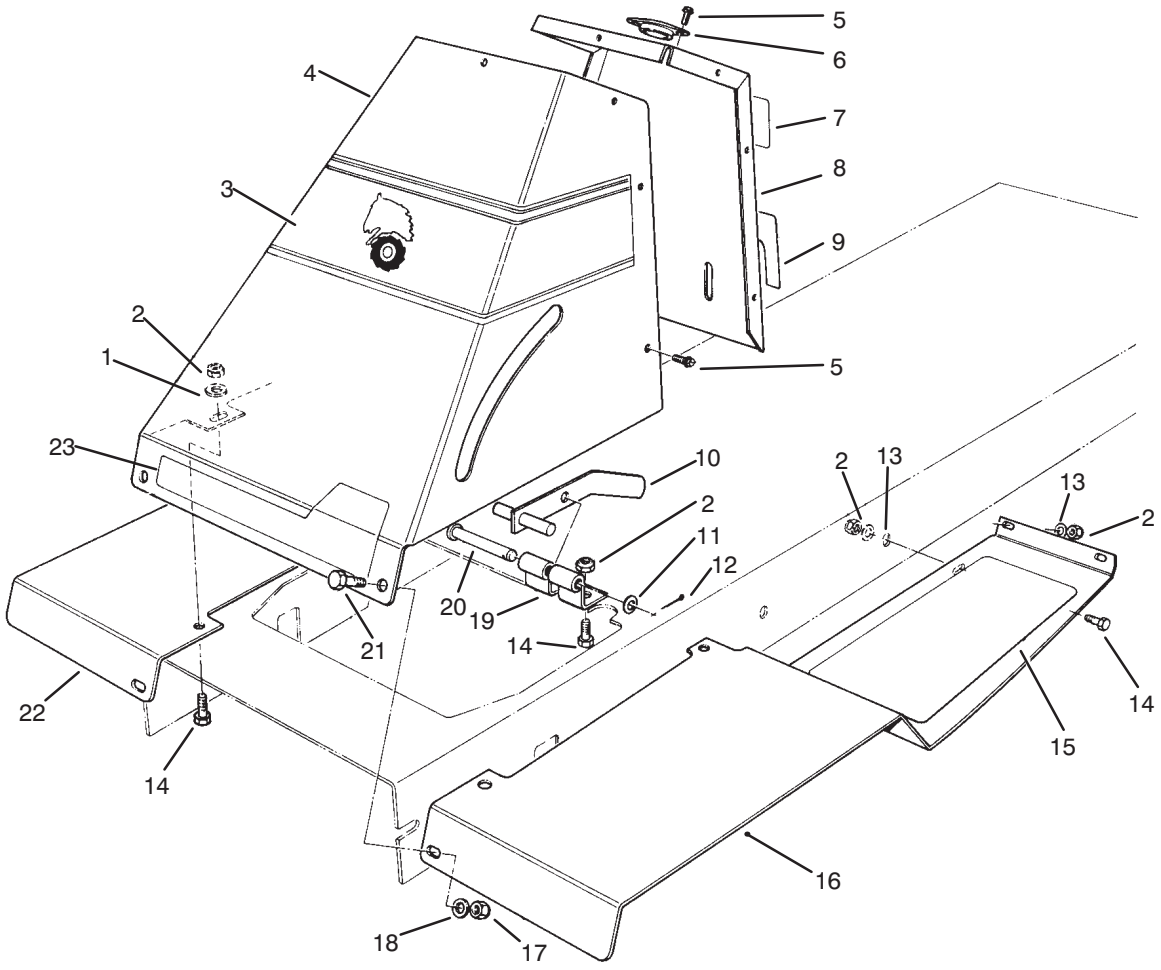

C–0434

FRONT TOWER ASSEMBLY

Ref. No.	Part No.	Description	No. Used
1	3256–35	Washer – Flat	4
2	3296–29	Nut – Lock	14
3	76–1270	Decal	1
4	56–7130	Tower – Front	1
5	32104–76	Screw – Self Tap Acorn Hd.	9
6	56–7170	Guide – Shaft, Steering	1
7	79–0370	Decal – Danger	1
8	56–7140	Tower – Rear	1
9	56–7810	Decal – Brake, Parking	1
10	47–1290	Brake – Parking	1
11	3256–24	Washer – Flat	1
12	3272–6	Pin – Cotter	1
13	3256–23	Washer – Flat	8
14	322–5	Screw – Cap Hex. Hd.	10
15	47–1440	Tread – Foot	2
16	47–0940	Footrest – L.H.	1

Ref. No.	Part No.	Description	No. Used
17	3296–42	Nut – Lock	2
18	3256–22	Washer – Flat	2
19	47–2060	Bracket – Brake, Parking	1
20	283–52	Pin – Clevis	1
21	321–4	Screw – Cap Hex. Hd.	2
22	47–0930	Footrest – R.H.	1
23	82–6280	Decal – Recycler (Not on Model No.70140)	1
*	12–8829	Loose Parts – Model 70080, 70120 & 70140	1
*	12–8819	Loose Parts – Model 70080, 70120 & 70140 (Includes Steering Wheel)	1
*	12–8809	Loose Parts – Model 70042	1
*	12–8799	Loose Parts – Model 70042 (Includes Steering Wheel)	1

*Not Illustrated

© The TORO Company –1993 Rev. 1994
All Rights Reserved

TPS

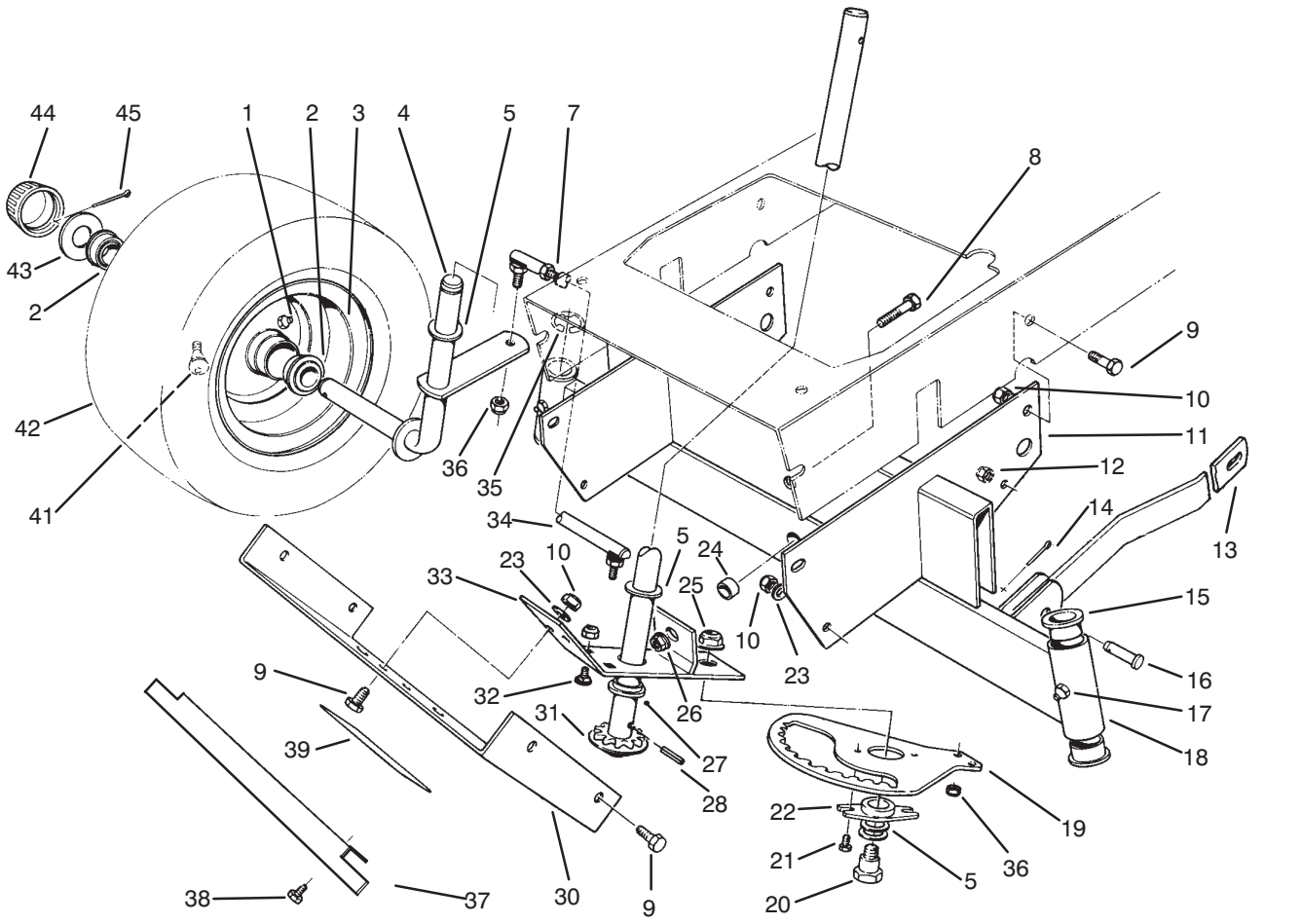

FRONT AXLE ASSEMBLY

Ref. No.	Part No.	Description	No. Used
1	302–5	Fitting – Grease	2
2	251–210	Bearing	4
3	217–80	Rim	2
4	47–0600	Spindle – R.H.	1
*	47–0590	Spindle – L.H.	1
5	3–6498	Washer – Thrust	5
7	3220–2	Nut – Hex. Jam	1
8	325–6	Screw – Cap Hex. Hd.	1
9	322–5	Screw – Cap Hex. Hd.	8
10	3296–29	Nut – Lock	8
11	47–0760	Support – Axle, Front	1
12	3296–8	Nut – Lock	1
13	47–0010	Arm – Suspension, Front	2
14	3272–6	Pin – Cotter	2
15	27–9080	Bearing – Flange	4
16	283–2	Pin – Clevis	2
17	302–49	Fitting – Grease	2
18	80–2430	Axle – Front (Incl. Ref. #15 & 17)	1
19	80–2450	Rack – Steering	1
20	56–7530	Bolt – Shoulder	1
21	32144–4	Screw – Special	2
22	56–7520	Bushing – Sector	1
23	3256–23	Washer – Flat	6

Ref. No.	Part No.	Description	No. Used
24	28–0380	Spacer – Axle, Front	1
25	32128–21	Nut – Lock, Flange Hd.	1
26	32128–23	Nut – Lock, Flange Hd.	1
27	47–0700	Bearing – Flange	1
28	32121–9	Pin – Roll	1
30	56–7180	Cover – Front	1
31	56–7500	Shaft – Steering	1
32	3230–18	Bolt – Carriage	2
33	56–7470	Bracket – Rack, Steering (Incl. Ref. #27)	1
34	47–0610	Tie Rod – Adjustable (Incl. Ref. #7)	1
*	80–2460	Tie Rod – Fixed	1
35	32151–48	Ring – Retaining, External	2
36	3296–4	Nut – Lock	4
37	92–0876	Guard – Front	1
38	32144–14	Screw – Thread Forming	2
39	26–4830	Decal – Instructions	1
41	237–27	Valve Stem w/Cap	2
42	231–116	Tire	2
43	28–2480	Washer	2
44	61–9780	Cap – Hub	2
45	3272–12	Pin – Cotter	2
†	232–44	Tube – Inner	2

*Not Illustrated
†Service Replacement Part

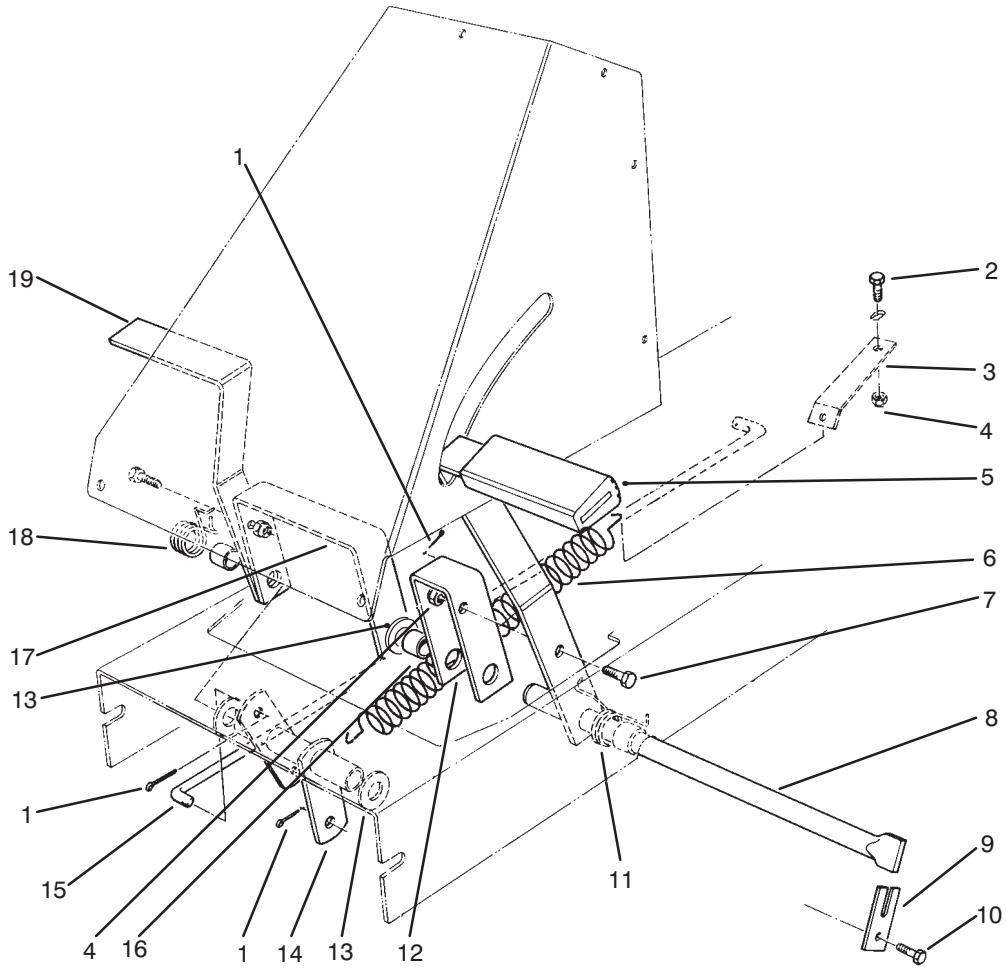

C–0439A

BRAKE & CLUTCH ASSEMBLY

Ref. No.	Part No.	Description	No. Used
1	3272–6	Pin – Cotter	3
2	322–5	Screw – Cap Hex. Hd.	1
3	56–7240	Bracket – Retaining, Spring	1
4	3296–29	Nut – Lock	3
5	65–2920	Pad – Pedal, Foot	2
6	62–3930	Spring – Extension	1
7	322–5	Screw – Cap Hex. Hd.	2
8	47–0770	Shaft – Pivot, Pedal	1
9	47–0780	Retainer – Shaft	1
10	321–4	Screw – Cap Hex. Hd.	1

Ref. No.	Part No.	Description	No. Used
11	56–7070	Spring – Torsion, Clutch	1
12	47–0560	Bracket – Clutch, Pedal	1
13	3256–27	Washer – Flat	3
14	56–7650	Tube – Pivot	1
15	56–7570	Rod – Engagement	1
16	47–0570	Spacer – Pedal	3
17	47–0550	Bracket – Brake, Pedal	1
18	56–7080	Spring – Torsion, Brake	1
19	47–0540	Pedal	2

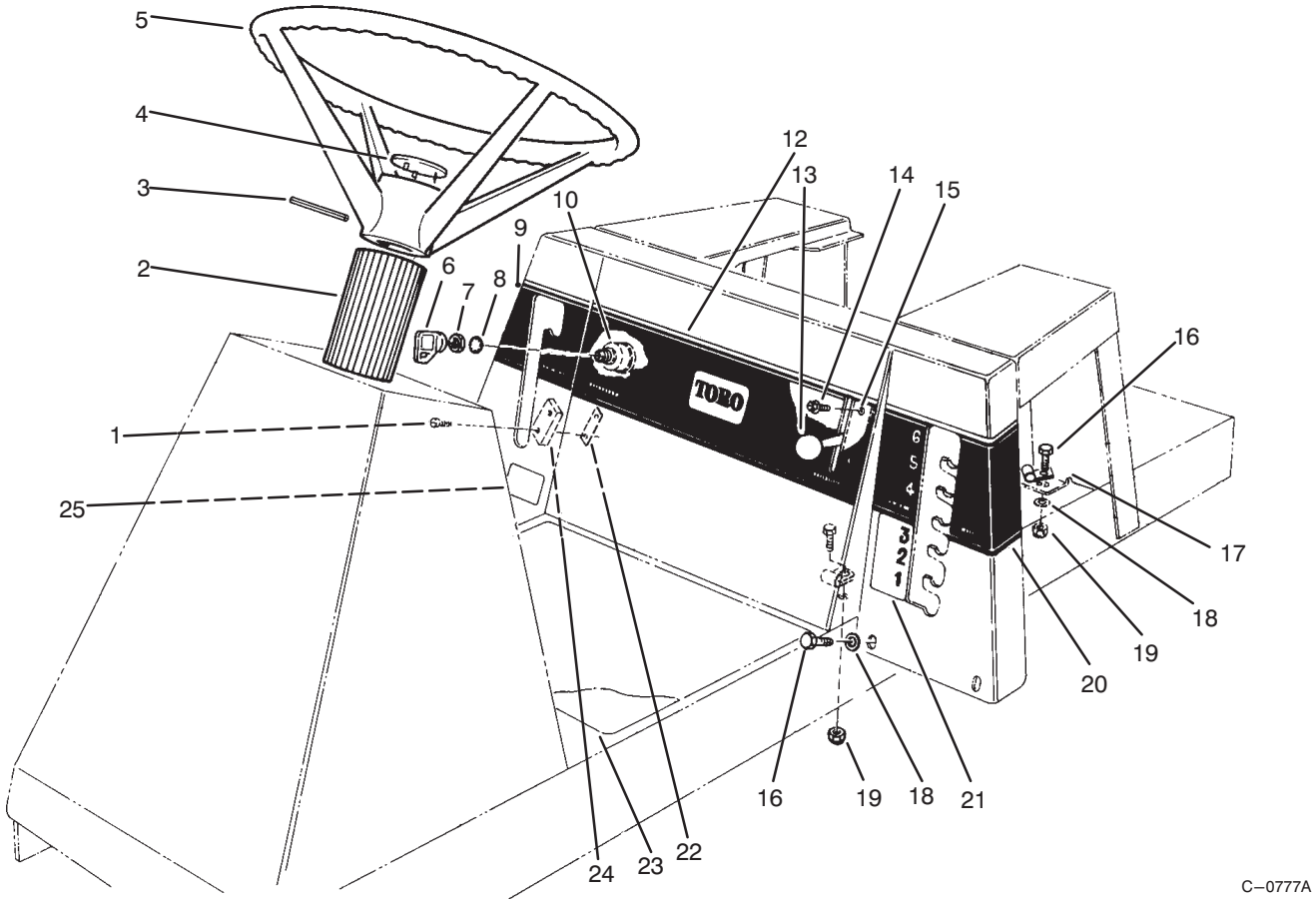

STEERING WHEEL, SWITCHES & DECALS

Ref. No.	Part No.	Description	No. Used
1	147665	Screw – Phillips Head	2
2	66–6740	Cover – Shaft, Steering	1
3	32121–78	Pin – Roll	1
4	66–6910	Insert – Wheel, Steering	1
5	49–3240	Assy. – Wheel, Steering (Incl. Ref. #4)	1
6	63–8360	Key	1
7	218–461	Nut – Lock	1
8	3254–5	Washer – Lock, Int. Tooth	1
9	76–1310	Decal – Engage, Top	1
10	88–9830	Switch – Ignition (Incl. Ref. #6–8) (Model No.70042)	1
10	23–0660	Switch – Ignition (Incl. Ref. #6–8) (Model No. 70080, 70120 & 70140)	1

Ref. No.	Part No.	Description	No. Used
11	92–1751	Decal – Shift Pattern	1
12	76–1260	Decal – Ignition & Throttle	1
13	233–25	Knob	1
14	32104–76	Screw – Self–Tapping	2
15	92–0890	Control – Throttle (Incl. Ref. #13)	1
16	322–5	Screw – Cap Hex. Hd.	8
17	2412–68	Clamp	2
18	3256–23	Washer – Flat	7
19	3296–29	Nut – Lock	4
20	76–1290	Decal – H.O.C. Top	1
21	76–1300	Decal – H.O.C. Bottom	1
22	3290–354	Nut – Double	1
23	76–1090	Decal – Instructions	1
24	88–9931	Switch – Micro	1
25	76–1320	Decal – Disengage	1

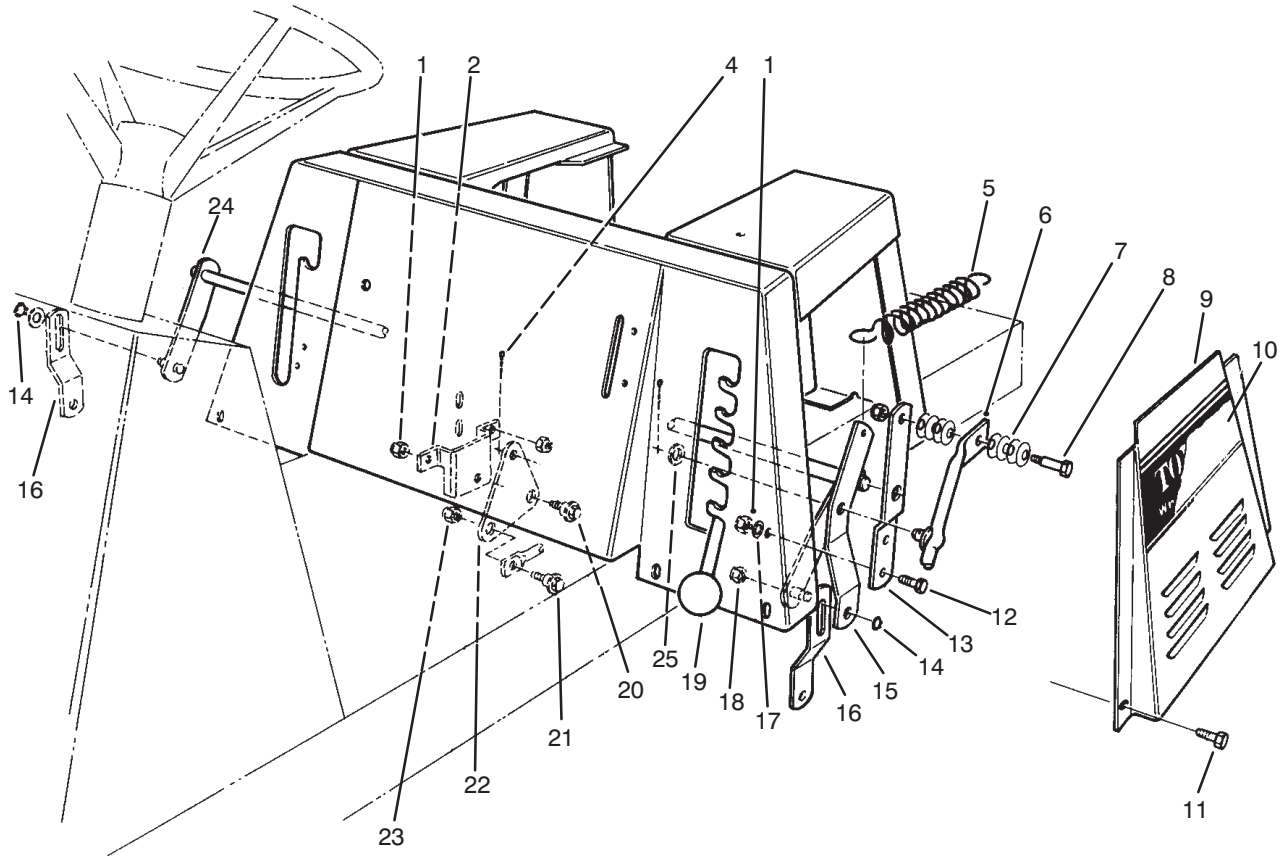

C–0778A

LINKAGE ASSEMBLY

Ref. No.	Part No.	Description	No. Used
1	3296–29	Nut – Lock	7
2	80–2310	Bracket – Bell Crank Mount	1
4	3272–6	Pin – Cotter	2
5	62–3930	Spring – Extension	1
6	47–1850	Lever – Height–of–Cut	1
7	3290–413	Washer – Belleville	8
8	28–0540	Bolt – Shoulder	1
9	92–0878	Panel L.H. – Base, Seat	1
10	76–1210	Decal – L.H. (Model 70042)	1
10	76–1250	Decal – L.H. (Model 70120 & 70140)	1
10	76–1230	Decal – L.H. (Model 70080)	1
11	321–4	Screw – Cap Hex. Hd.	4
12	322–5	Screw – Cap Hex. Hd.	2
13	47–1840	Bracket – Height–of–Cut	1
14	32151–61	Ring – Retaining	2

Ref. No.	Part No.	Description	No. Used
15	80–2320	Bracket – H.O.C., Engage. (Model No. 70042, 70080 & 70120)	1
15	80–2321	Bracket – H.O.C., Engage (Model No. 70140)	1
16	63–5830	Link – Suspension, Deck	2
17	3256–23	Washer – Flat	4
18	3296–42	Nut – Lock	1
19	233–48	Knob	1
20	19–1470	Bolt – Shoulder	1
21	65–5670	Bolt – Shoulder	1
22	80–2360	Crank – Bell, Deck Engage	1
23	3296–8	Nut – Lock	1
24	56–7400	Arm – Lever, H.O.C.	1
25	3256–26	Washer – Flat	1

3315–764A

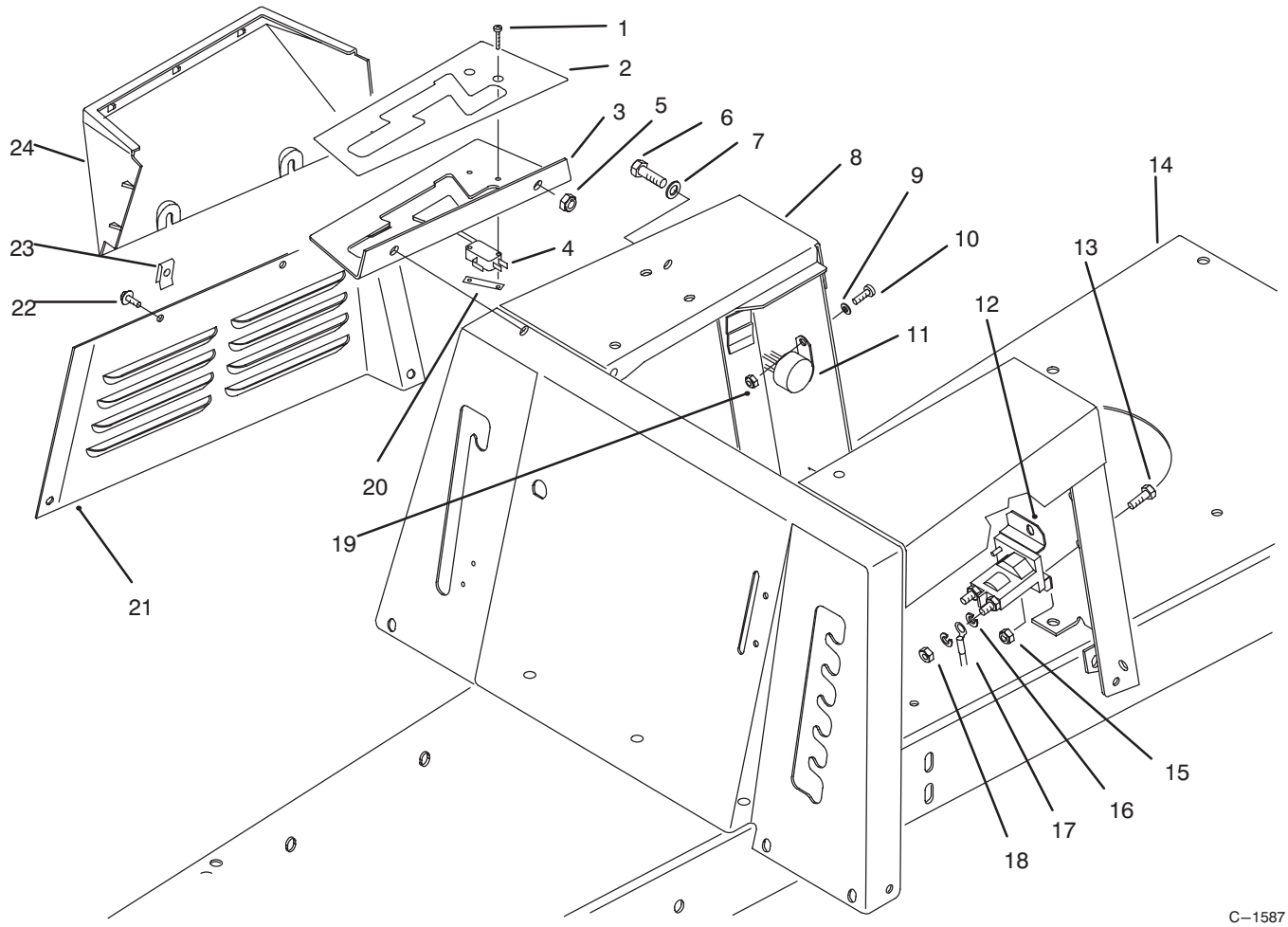

SEAT BODY & SIDE PANEL ASSEMBLY

Ref. No.	Part No.	Description	No. Used
1	147665	Screw – Phillips Hd.	2
2	92–1751	Decal – Shift Pattern	1
3	92–0895	Gate – Shift	1
4	88–9930	Switch – Micro, Short	1
5	3296–29	Nut – Lock	2
6	322–5	Screw – Cap Hex. Hd.	2
7	3256–23	Washer – Flat	2
8	92–0866	Body W.A. – Seat Support	1
9	3256–14	Washer – Flat	1
10	3290–134	Screw – Machine	1
11	28–7890	Module – Interlock (Model No. 70080, 70120 & 70140)	1
11	116397	Relay (Model No. 70042)	1

Ref. No.	Part No.	Description	No. Used
12	47–1910	Solenoid	1
13	321–4	Screw – Cap Hex. Hd.	2
14	92–0860	Frame	1
15	3296–42	Nut – Lock	2
16	3253–3	Washer – Lock	4
17	56–7670	Cable – Positive	1
18	3218–1	Nut – Jam	2
19	3296–2	Nut – Lock	1
20	3290–354	Nut – Double	1
21	92–0877	Panel – Seat Base, R.H.	1
22	32140–99	Screw – Sems	2
23	3290–191	Nut – Speed	2
24	88–9800	Cover – Gate, Shift	1

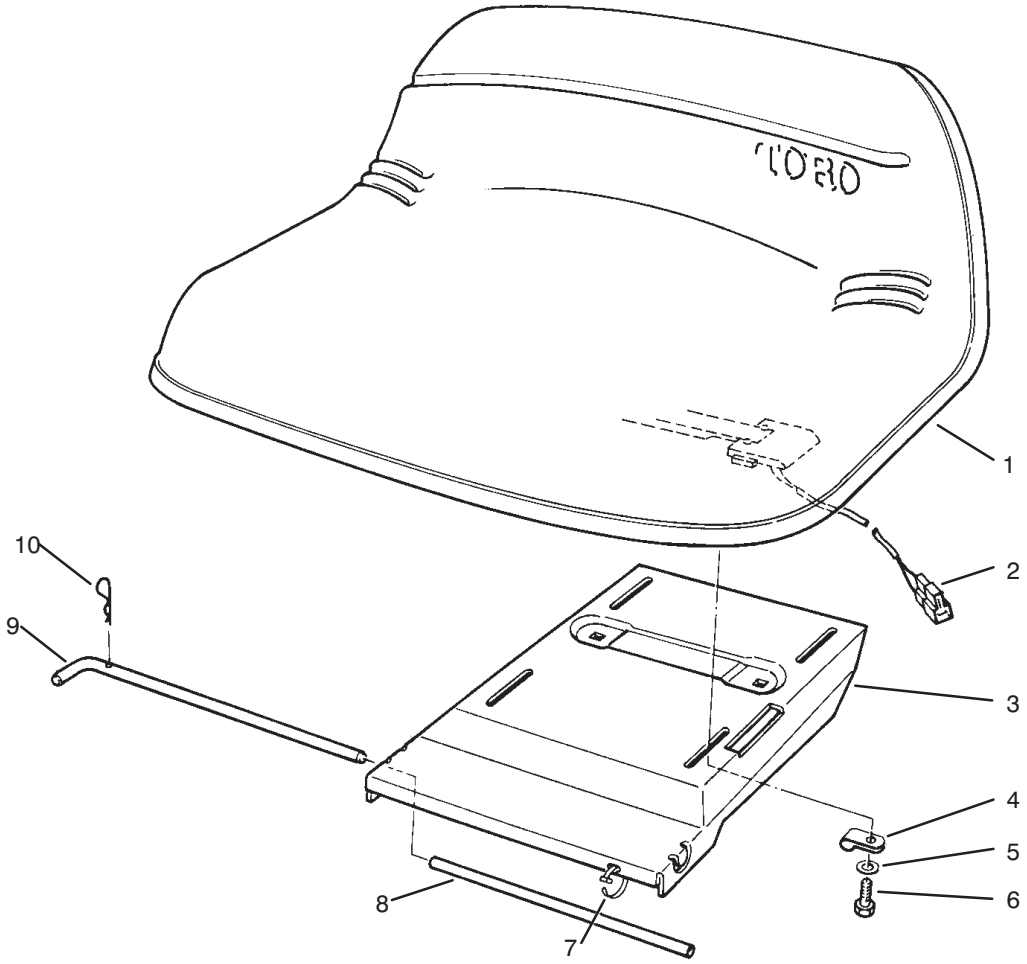

C–0744A

SEAT ASSEMBLY (Model No. 70042)

Ref. No.	Part No.	Description	No. Used
1	66–6680	Assembly – Seat	1
2	38–1420	Switch – Interlock	1
3	63–5540	Base – Seat	1
4	2412–68	Clamp – Wire	1
5	3256–23	Washer – Flat	4

Ref. No.	Part No.	Description	No. Used
6	322–3	Screw – Cap Hex. Hd.	4
7	3290–378	Tie – Cable	1
8	63–5670	Tube – Bumper, Seat Rod	1
9	80–2620	Rod – Base, Seat	1
10	3290–307	Pin – Cotter, Hair	1

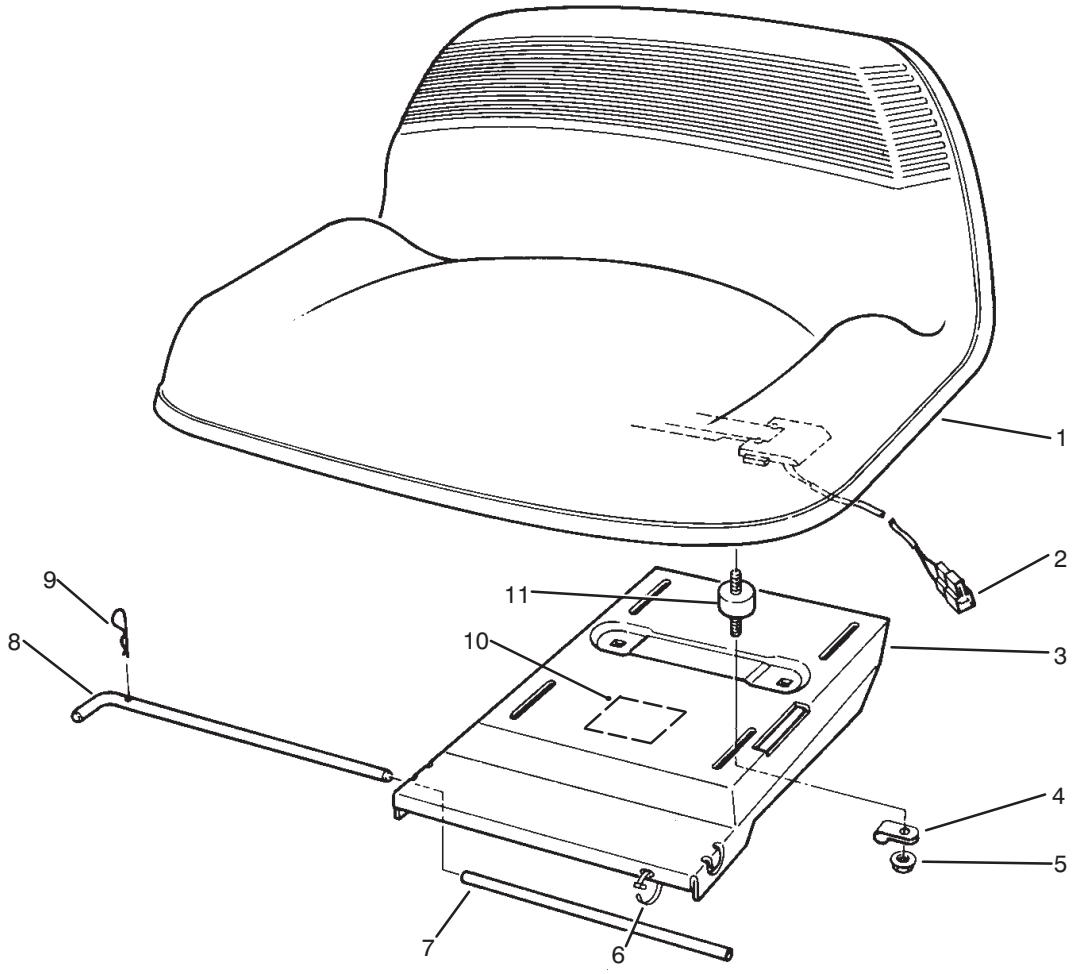

C−0745A

SEAT ASSEMBLY (Model No. 70080, 70120 & 70140)

Ref. No.	Part No.	Description	No. Used
1	76−1410	Assembly − Seat	1
2	38−1420	Switch − Interlock	1
3	63−5540	Base − Seat	1
4	2412−68	Clamp − Wire	1
5	32128−20	Nut − Flange Hd.	4
6	3290−378	Tie − Cable	1

Ref. No.	Part No.	Description	No. Used
7	63−5670	Tube − Bumper, Seat Rod	1
8	80−2620	Rod − Base, Seat	1
9	3290−307	Pin − Cotter, Hair	1
10	76−3930	Decal − Noise (Model No. 70140)	1
11	62−5480	Isolator − Seat	4

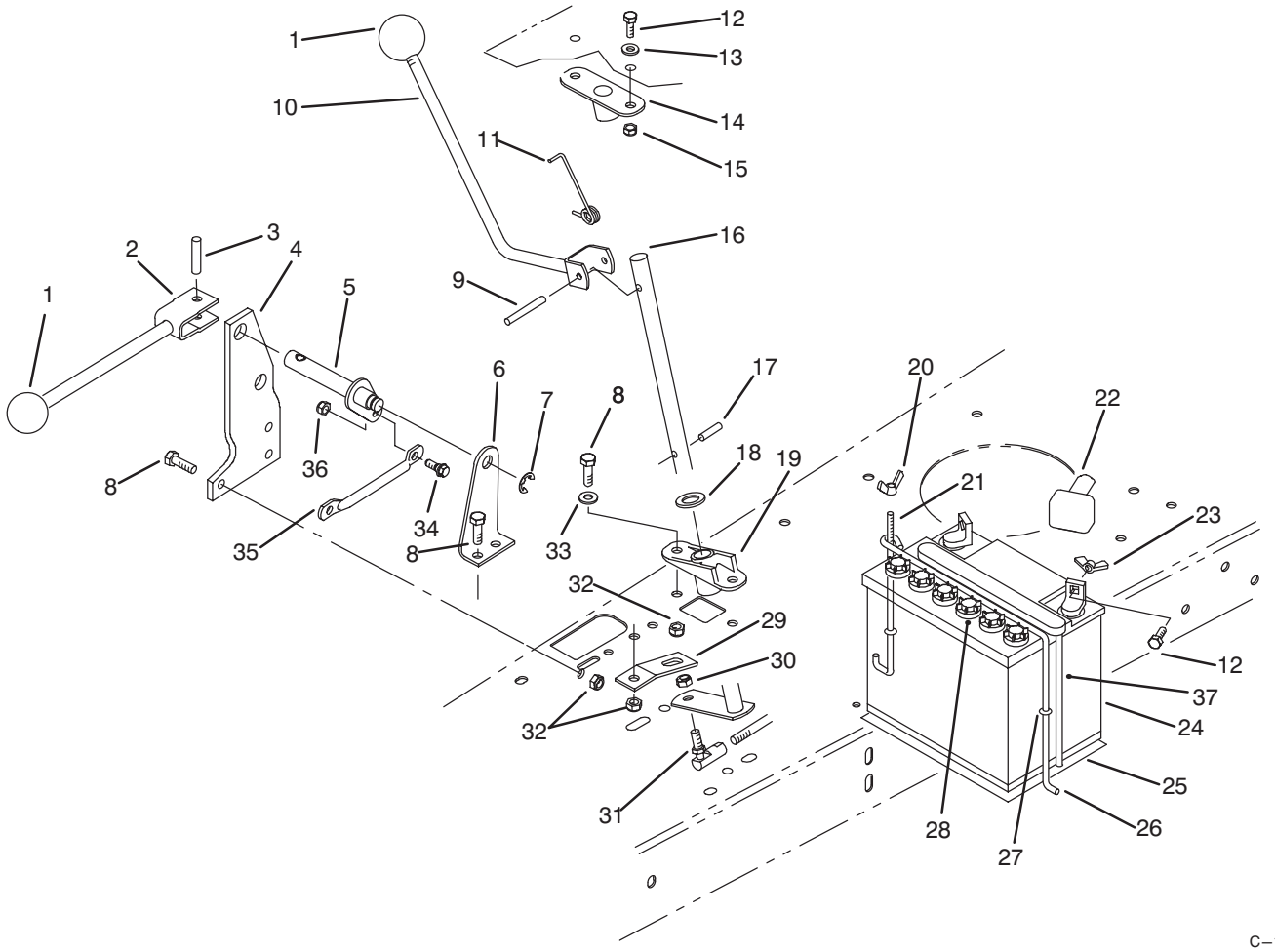

C−1601

TRANSMISSION LINKAGE ASSEMBLY

Ref. No.	Part No.	Description	No. Used
1	233−48	Knob	2
2	80−2400	Lever W.A. − Engage	1
3	32121−25	Pin − Roll	1
4	80−2350	Pivot − Outer	1
5	80−2370	Shaft W.A. − Pivot	1
6	80−2340	Bracket − Pivot, Inner	1
7	32120−47	Ring − Retaining	1
8	322−5	Screw − Cap Hex. Hd.	4
9	32121−78	Pin − Roll	1
10	92−0884	Lever W.A. − Shaft	1
11	92−0894	Spring − Torsion	1
12	321−4	Screw − Cap Hex. Hd.	2
13	3256−22	Washer − Flat	2
14	92−0888	Support − Shift, Upper	1
15	3296−42	Nut − Lock	2
16	92−0891	Shaft W. A. − Shift	1
17	32121−16	Pin − Roll	1
18	257−11	Washer	1
19	92−0887	Support − Shift, Lower	1

Ref. No.	Part No.	Description	No. Used
20	32103−12	Nut − Wing	1
21	56−7720	Post − Battery	1
22	28−8080	Boot − Terminal	1
23	32103−22	Nut − Wing	2
24	80−2600	Battery − 12 Volt (Incl. Ref. #28 & 37)	1
25	62−4300	Pad − Battery	1
26	56−7710	Hold Down − Battery	1
27	237−143	O−Ring	2
28	218−560	Cap − Battery	6
29	92−0896	Retainer − Spring	1
30	3296−4	Nut − Lock	1
31	2411−32	Ball Joint	1
32	3296−29	Nut − Lock	4
33	3256−23	Washer − Flat	2
34	65−5670	Screw − Shoulder	1
35	80−2330	Link − Bell Crank	1
36	3296−8	Nut − Lock	1
37	56−2540	Tube − Vent, Battery	1

3315−764A

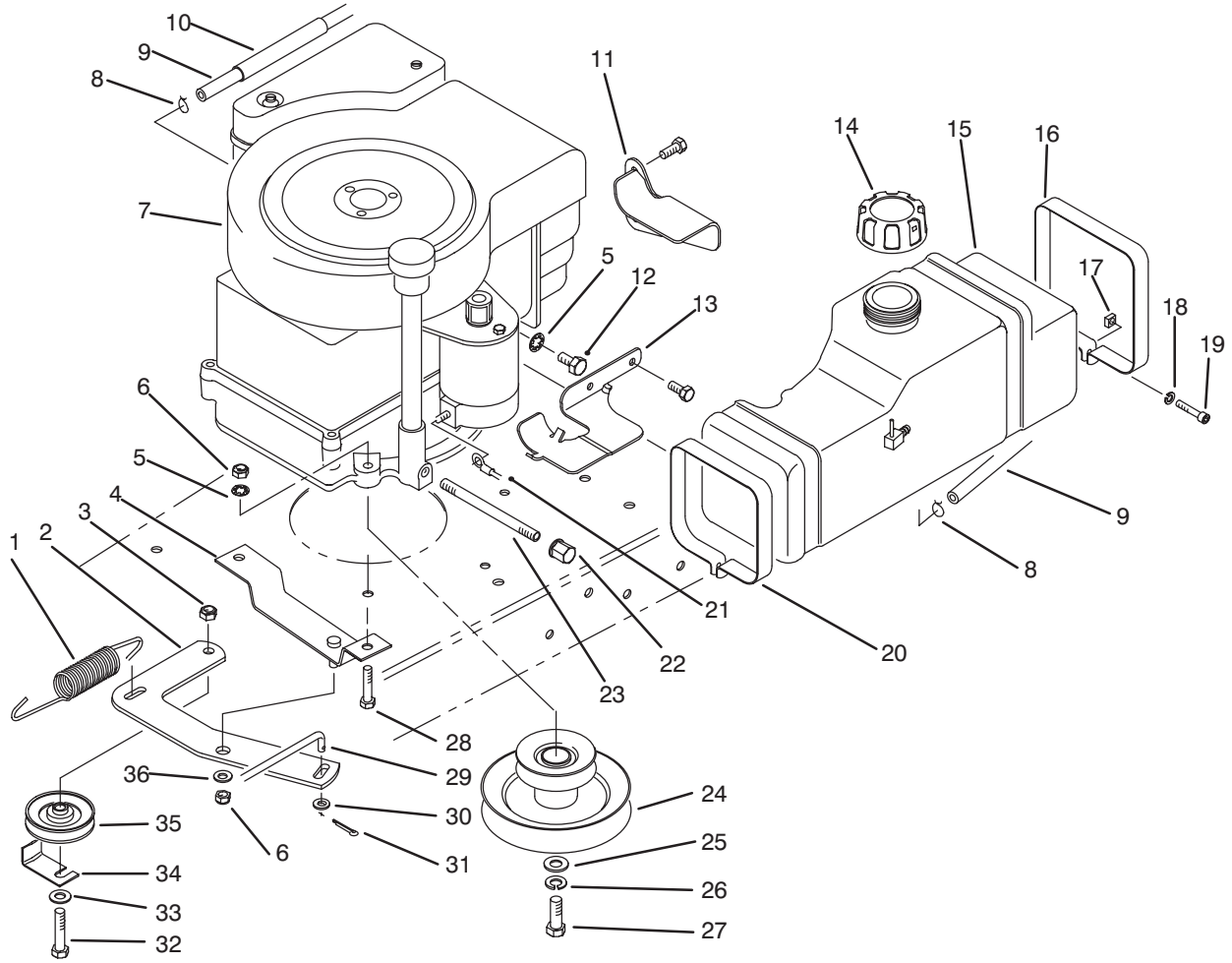

C−1585

ENGINE ASSEMBLY

Ref. No.	Part No.	Description	No. Used
1	92−0879	Spring	1
2	92−0883	Plate − Mounting, Idler	1
3	3296−39	Nut − Lock	1
4	92−0881	Bracket W.A. − Traction	1
5	3254−2	Washer − Lock, Int. Tooth	4
6	3296−29	Nut − Lock	2
7		Engine − 8 H.P. Model 70042 (195707−0121−01)	1
7		Engine − 10 H .P. Model 70080 (257707−0124−01)	1
7		Engine − 12 H.P. Models 70120 & 70140 (286707−0119−01)	1
8	2412−98	Clamp − Hose	2
9	47−2986	Hose − Fuel Line Model 70042	1
9	47−2981	Hose − Fuel Line Model 70080	1
9	47−2961	Hose − Fuel Line Models 70120 & 70140	1
10	62−5490	Support − Fuel Line	1
11	57−4050	Bracket − Mounting, Rear Model 70042	1
12	32144−14	Screw	2
13	57−4040	Bracket − Mounting, Front Model 70042	1

Ref. No.	Part No.	Description	No. Used
14	55−3570	Cap − Fuel	1
15	56−7050	Tank − Fuel	1
16	57−4060	Retainer − Front	1
17	32107−11	Nut − Square	2
18	3253−3	Washer − Lock	2
19	3274−51	Screw − Hex. Socket Hd.	2
20	57−4070	Retainer − Rear	1
21	56−7670	Cable − Battery, Positive	1
22	288−10	Cap − Pipe	1
23	289−19	Nipple − Pipe	1
24	92−0873	Pulley − Engine	1
25	3256−25	Washer − Flat	1
26	3253−6	Washer − Lock	1
27	62−3760	Screw − Cap Hex. Hd.	1
28	322−7	Screw − Cap Hex. Hd.	1
29	92−0871	Rod − Traction	1
30	3256−22	Washer − Flat	1
31	3272−6	Pin − Cotter	1
32	323−9	Screw − Cap Hex. Hd.	1
33	3256−24	Washer − Flat	1
34	12−9020	Retainer − Belt	1
35	12−5820	Pulley − Idler	1
36	3256−57	Washer − Flat	1
*	88−4490	Reducer − Throttle Model 70140	1

ELECTRICAL SCHEMATICS

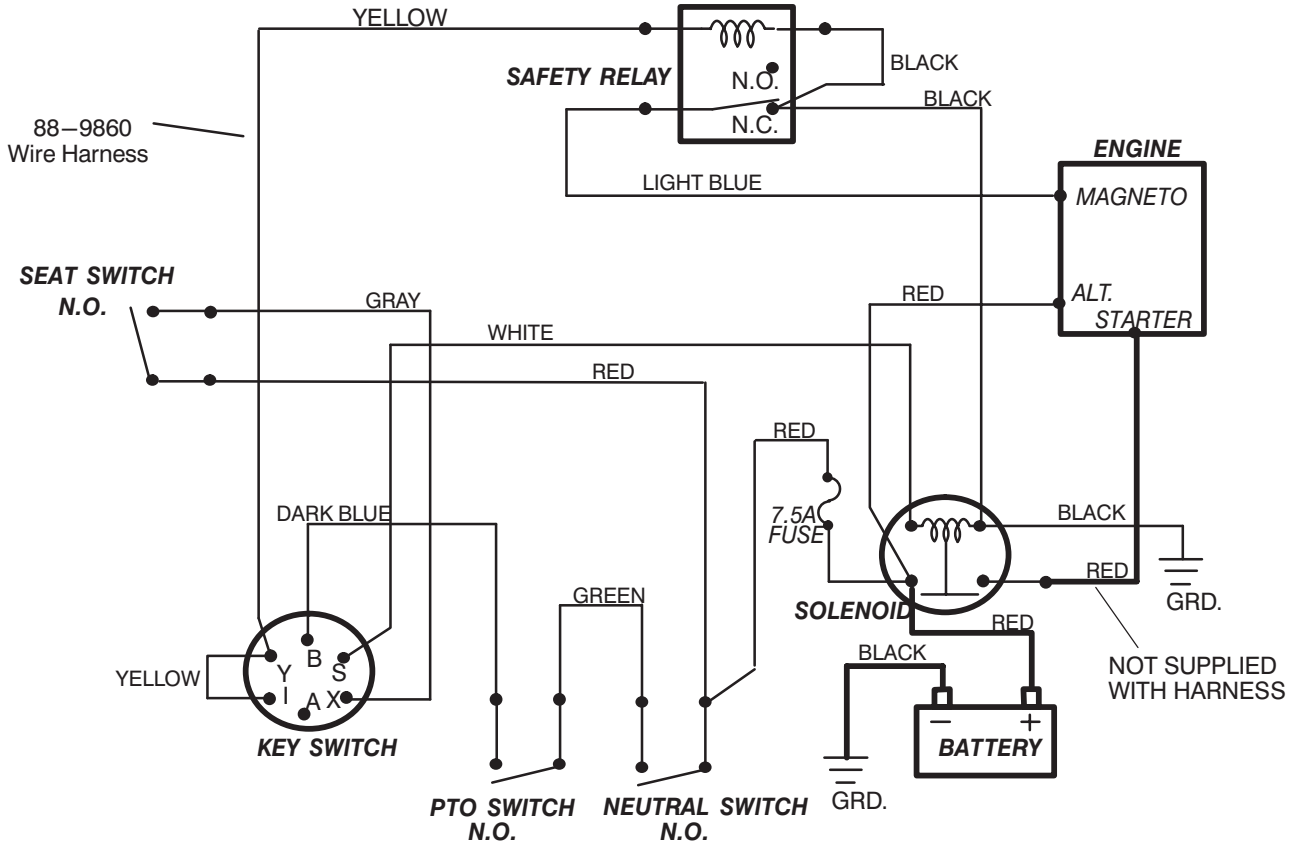

MODEL NO. 70042

C–1552

MODELS NO. 70080, 70120 & 70140

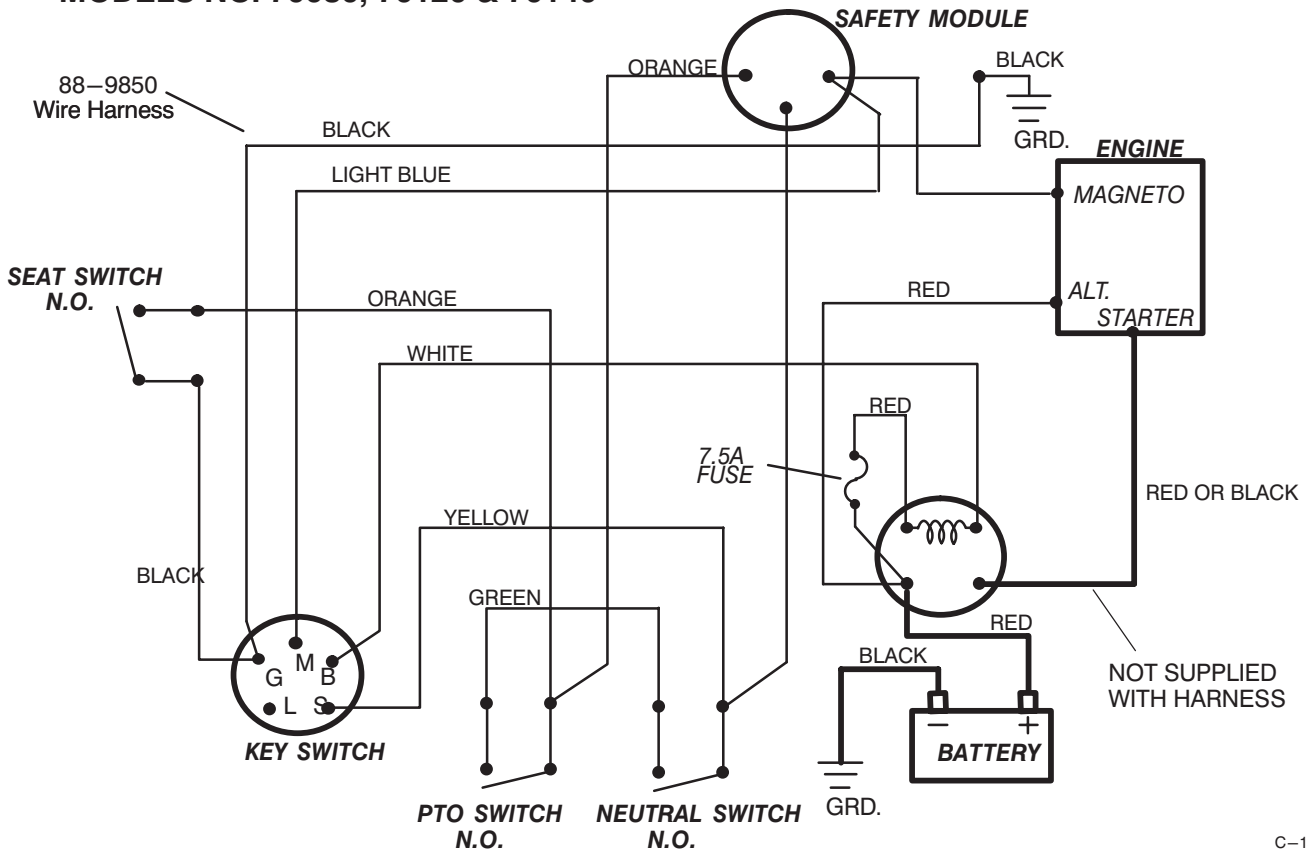

C–1553

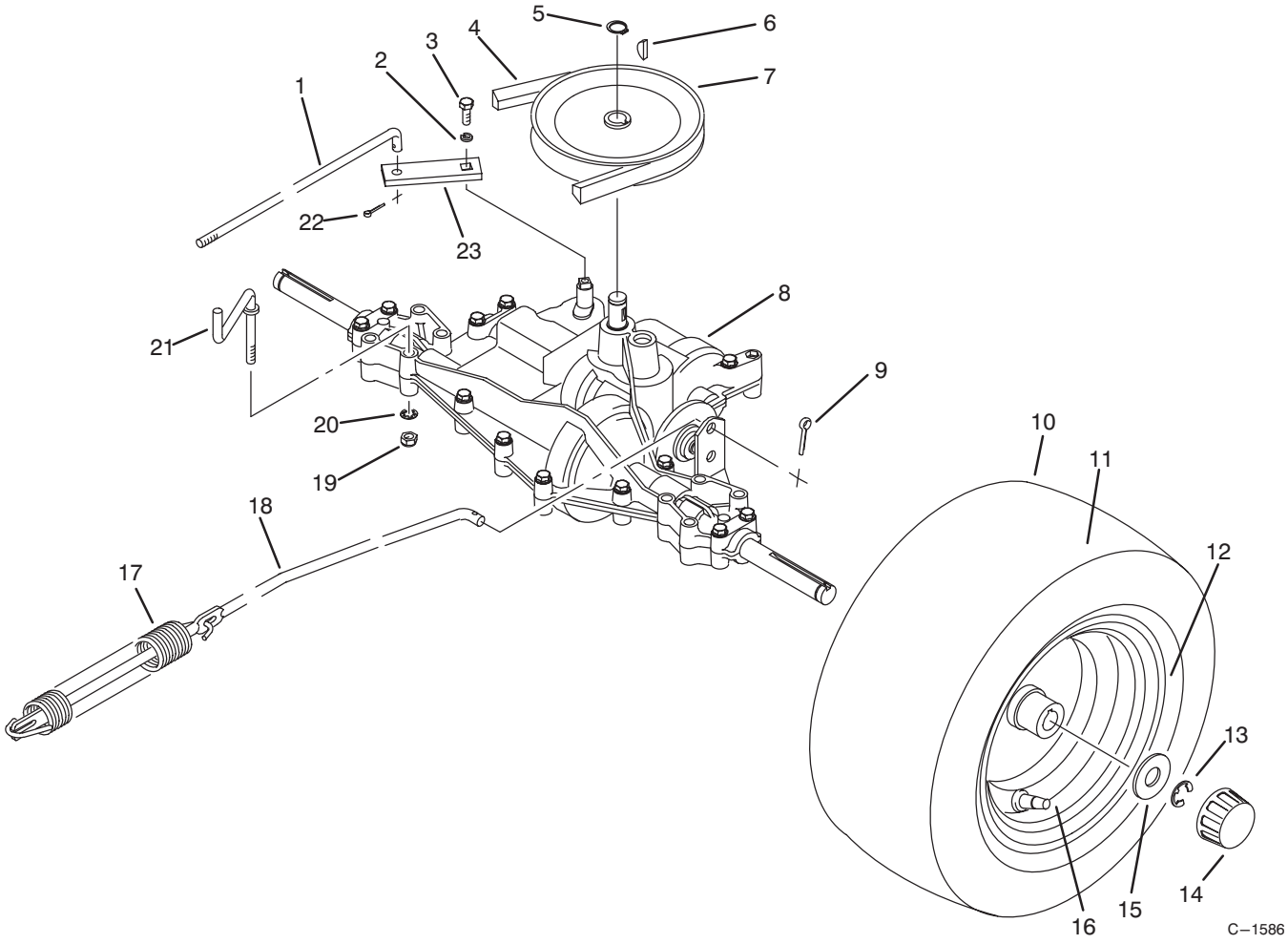

REAR AXLE ASSEMBLY

Ref. No.	Part No.	Description	No. Used
1	92–0889	Link – Shift	1
2	3253–3	Washer – Lock	1
3	329–4	Screw – Cap Hex. Hd.	1
4	92–0870	V–Belt – Traction	1
5	32120–64	Ring – Retaining	1
6	3257–23	Key	1
7	92–0874	Pulley	1
8	92–0862	Transaxle	1
9	3272–16	Pin – Cotter	1
10	231–117	Tire	2
11	232–39	Tube – Inner	2
12	88–9730	Rim	2

Ref. No.	Part No.	Description	No. Used
13	32151–48	Ring – Retaining	2
14	61–9780	Cap – Hub	2
15	28–2480	Washer	2
16	232–27	Stem – Valve	2
17	57–9940	Spring – Brake	1
18	92–0872	Rod – Brake	1
19	3296–29	Nut – Lock	1
20	3254–2	Washer – Lock, Int. Tooth	1
21	92–0899	Guide – Belt, Lower	1
22	3272–6	Pin – Cotter	1
23	92–0880	Arm – Shift, Transaxle	1

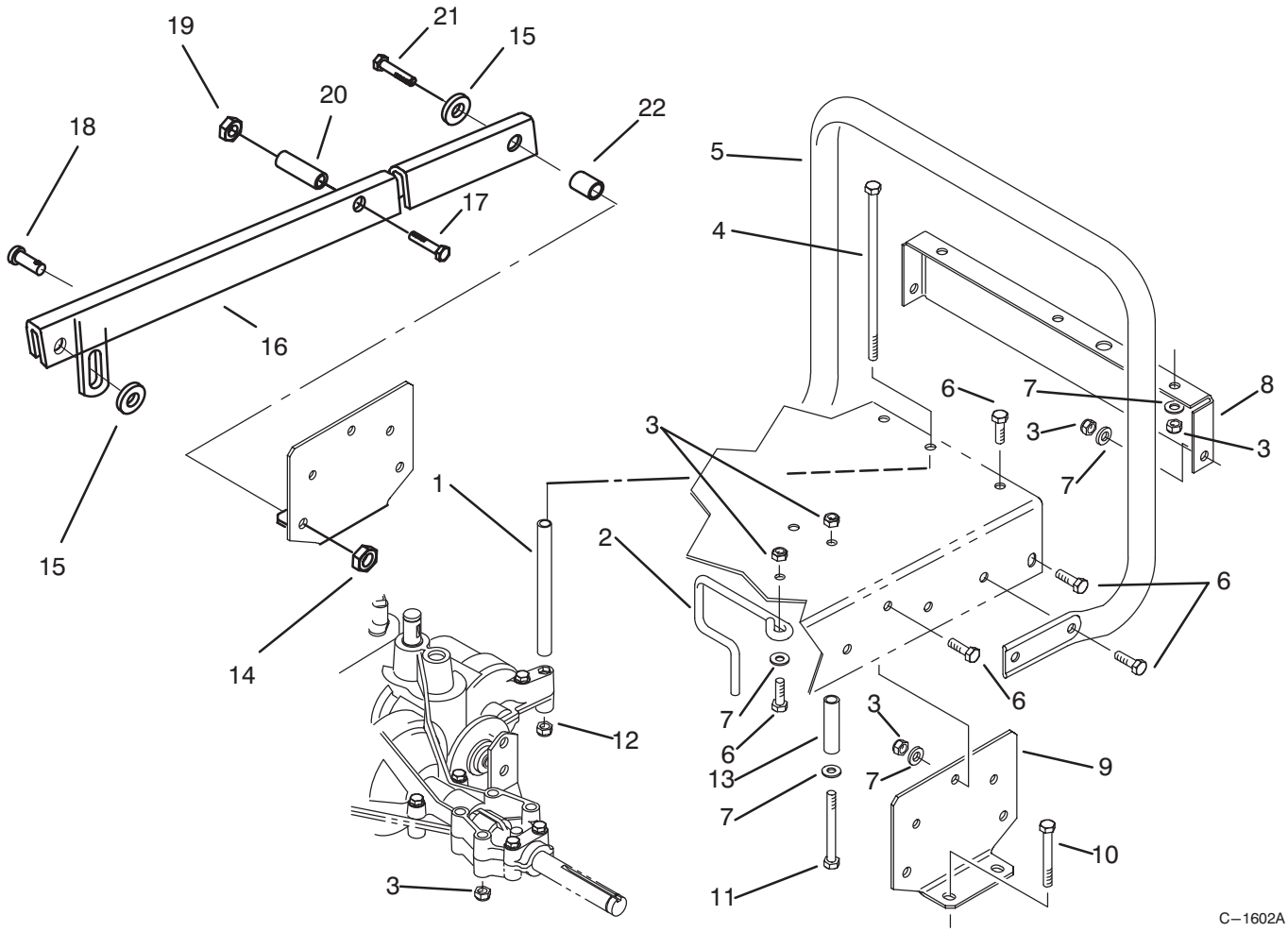

STAND BAR ASSEMBLY

Ref. No.	Part No.	Description	No. Used
1	92–0897	Spacer	1
2	92–0898	Guide – Belt	1
3	3296–29	Nut – Lock	17
4	322–50	Screw – Cap Hex. Hd.	1
5	92–0864	Standbar	1
6	322–5	Screw – Cap Hex. Hd.	15
7	3256–23	Washer – Flat	12
8	92–0861	Frame – Rear	1
9	92–0865	Support – Axle	2
10	322–12	Screw – Cap Hex. Hd.	4
11	322–14	Screw – Cap Hex. Hd.	2
12	3296–47	Nut – Lock	1

Ref. No.	Part No.	Description	No. Used
13	76–1560	Spacer	2
14	3296–59	Nut – Lock	3
15	3256–24	Washer – Flat	4
16	76–1540	Arm – Suspension R.H.	1
*	76–1550	Arm – Suspension L.H.	1
17	323–14	Screw – Hex Hd. Cap	2
18	283–42	Pin – Clevis	2
19	3296–39	Nut – Lock	1
20	76–1560	Spacer – Split	2
21	323–9	Screw – Hex Hd. Cap	2
22	56–7430	Pin – Support	2

*Not Illustrated

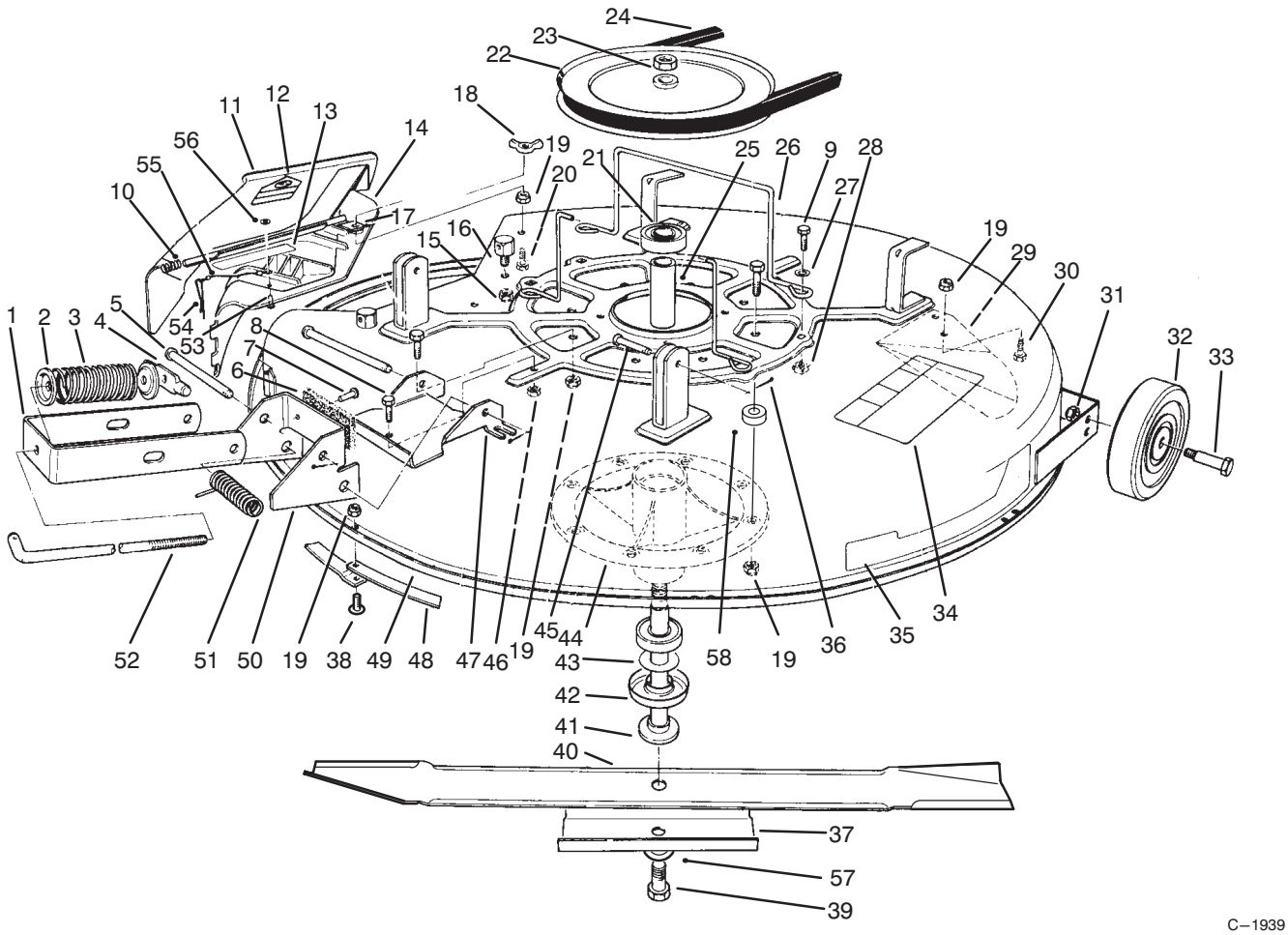

C–1939

MOWER ASSEMBLY – RECYCLER

Ref. No.	Part No.	Description	No. Used
1	47–1180	Bracket – Engagement	1
2	47–1140	Retainer – Spring, Top	2
3	47–0960	Spring – Compression	1
4	47–1200	Shaft – Adjusting	1
5	80–2570	Pin – Clevis	2
6	80–2550	Pad – Brake	1
7	3290–43	Rivet	2
8	321–4	Screw – Cap Hex. Hd.	1
9	322–5	Screw – Cap Hex. Hd.	10
10	28–8010	Spring – Torsion	1
11	44–5930	Assembly – Deflector (Incl. Ref. #12)	1
12	54–9220	Decal – Caution, Deflector	1
13	68–3650	Decal – Warning, Deflector	1
14	82–6150	Assy. – Cover, Discharge (Incl. Ref. #53–56)	1
15	3296–59	Nut – Lock	1
16	28–7350	Post – Pivot	1
17	83–7010	Brace – Cover, Rear	1
18	32103–2	Nut – Wing	1
19	3296–29	Nut – Lock	24
20	322–6	Screw – Cap Hex. Hd.	3
21	251–297	Bearing	2
22	80–4470	Pulley	1
23	3219–7	Nut – Hex. Hd.	1
24	92–0875	V–Belt	1
25	83–7020	Spacer – Bearing	1
26	60–9730	Guide – Belt	2
27	3256–23	Washer – Flat	8
28	3290–496	Nut – Retainer	4

Ref. No.	Part No.	Description	No. Used
29	80–2630	Kicker – 32”	4
30	322–3	Screw – Cap Hex. Hd.	7
31	3296–39	Nut – Lock	2
32	61–9760	Wheel – Deck	2
33	56–6590	Bolt – Wheel	2
34	66–1340	Decal – Danger	1
35	82–6270	Decal – Recycler	1
36	3272–6	Pin – Cotter	2
37	80–4570	Stiffener – Blade	1
38	32122–14	Screw – Truss, Phillips Hd.	8
39	26–0671	Bolt – Blade	1
40	80–4430	Blade – Recycler	1
41	80–4350	Shaft – Spindle	1
42	80–4370	Shield – Bearing	1
43	80–4390	Spacer – Hardened	1
44	56–7030	Body – Spindle	1
45	283–2	Pin – Clevis	2
46	3296–8	Nut – Lock	1
47	80–2560	Plate – Deck, Brake Mtg.	1
48	80–4490	Ring – Deck	4
49	14–9999	Deck – Cutting, Recycler	1
50	80–2530	Assembly – Brake (Incl. Ref. #6–7)	1
51	40–6230	Spring – Torsion	1
52	80–2580	Rod – Adjusting	1
53	3290–282	Rivet	2
54	28–8130	Pin – Chute, Locking	1
55	28–8070	Lanyard	1
56	3256–49	Washer – Flat	1

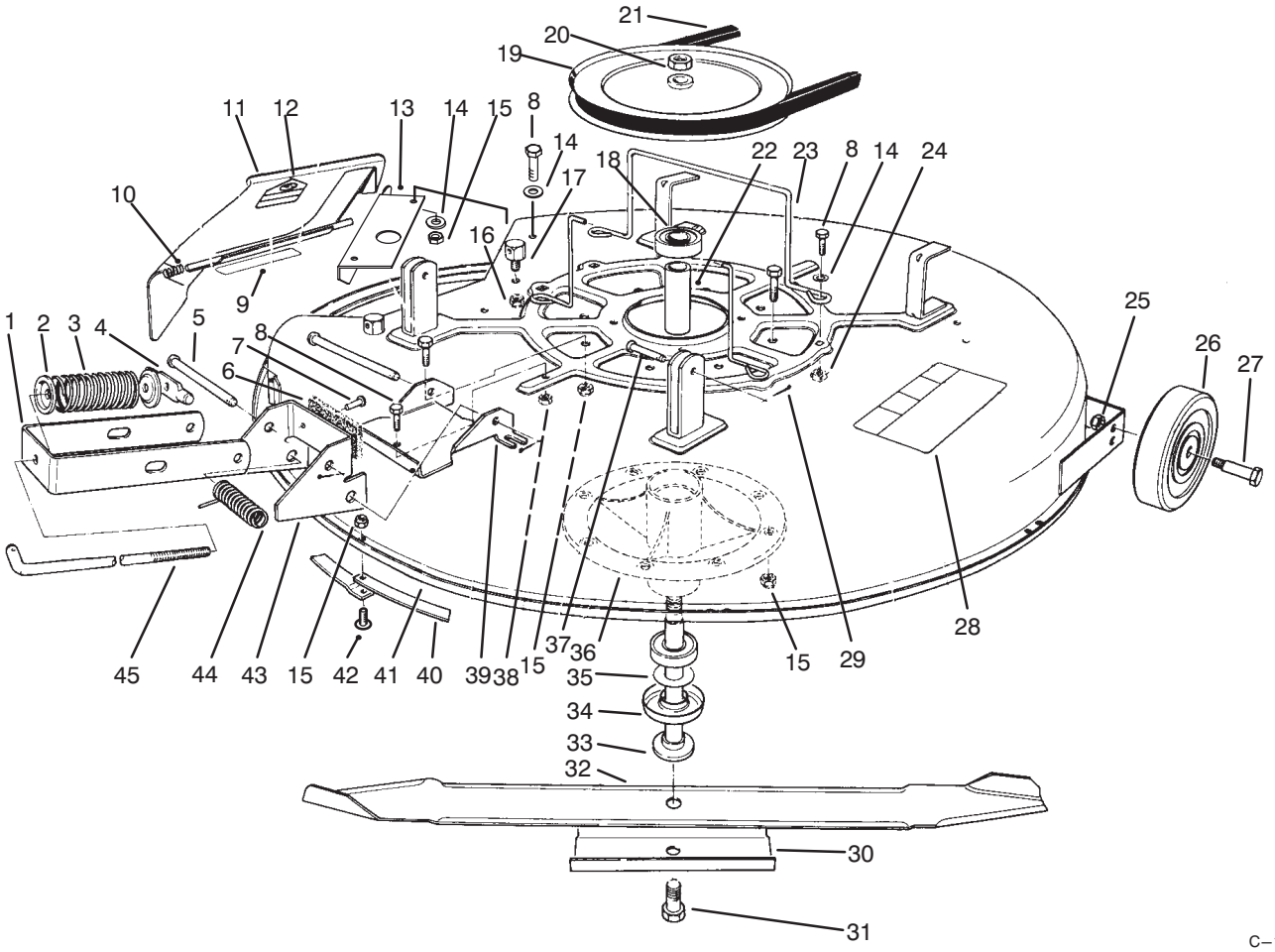

C–1620

MOWER ASSEMBLY – USED ON MODEL NO. 70140

Ref. No.	Part No.	Description	No. Used
1	47–1180	Bracket – Engagement	1
2	47–1140	Retainer – Spring, Top	2
3	47–0960	Spring – Compression	1
4	47–1200	Shaft – Adjusting	1
5	80–2570	Pin – Clevis	2
6	80–2550	Pad – Brake	1
7	3295–43	Rivet	2
8	322–5	Screw – Cap Hex. Hd.	14
9	68–3650	Decal – Warning, Deflector	1
10	28–8010	Spring – Torsion	1
11	44–5930	Assembly – Deflector (Incl. Ref. #12)	1
12	54–9220	Decal – Caution, Deflector	1
13	44–5720	Baffle – Deck	1
14	3256–23	Washer – Flat	8
15	3296–29	Nut – Lock	10
16	3296–59	Nut – Lock	1
17	28–7350	Post – Pivot	1
18	251–297	Bearing	2
19	80–4470	Pulley	1
20	3219–7	Nut – Hex. Hd.	4
21	92–0875	V–Belt	1
22	83–7020	Spacer – Bearing	1
23	60–9730	Guide – Belt	2

Ref. No.	Part No.	Description	No. Used
24	3290–496	Nut – Retainer	4
25	3296–39	Nut – Lock	2
26	61–9760	Wheel – Deck	2
27	56–6590	Bolt – Wheel	
28	66–1340	Decal – Danger	1
29	3272–6	Pin – Cotter	4
30	80–4570	Stiffener – Blade	1
31	26–0671	Bolt – Blade	1
32	33–4750	Blade	1
33	80–4350	Shaft – Spindle	1
34	80–4370	Shield – Bearing	1
35	80–4390	Spacer – Hardened	1
36	56–7030	Body – Spindle	1
37	283–2	Pin – Clevis	2
38	3296–8	Nut – Lock	1
39	80–2560	Plate – Deck, Brake Mtg.	1
40	88–9780	Ring – Deck	4
41	14–9999	Deck – Cutting	1
42	32122–14	Screw – Truss, Phillips Hd.	8
43	80–2530	Assembly Brake (Incl. Ref. #6–7)	1
44	40–6230	Spring – Torsion	1
45	80–2580	Rod – Adjusting	1

PEERLESS TRANSAXLE MODEL NO. 915−019

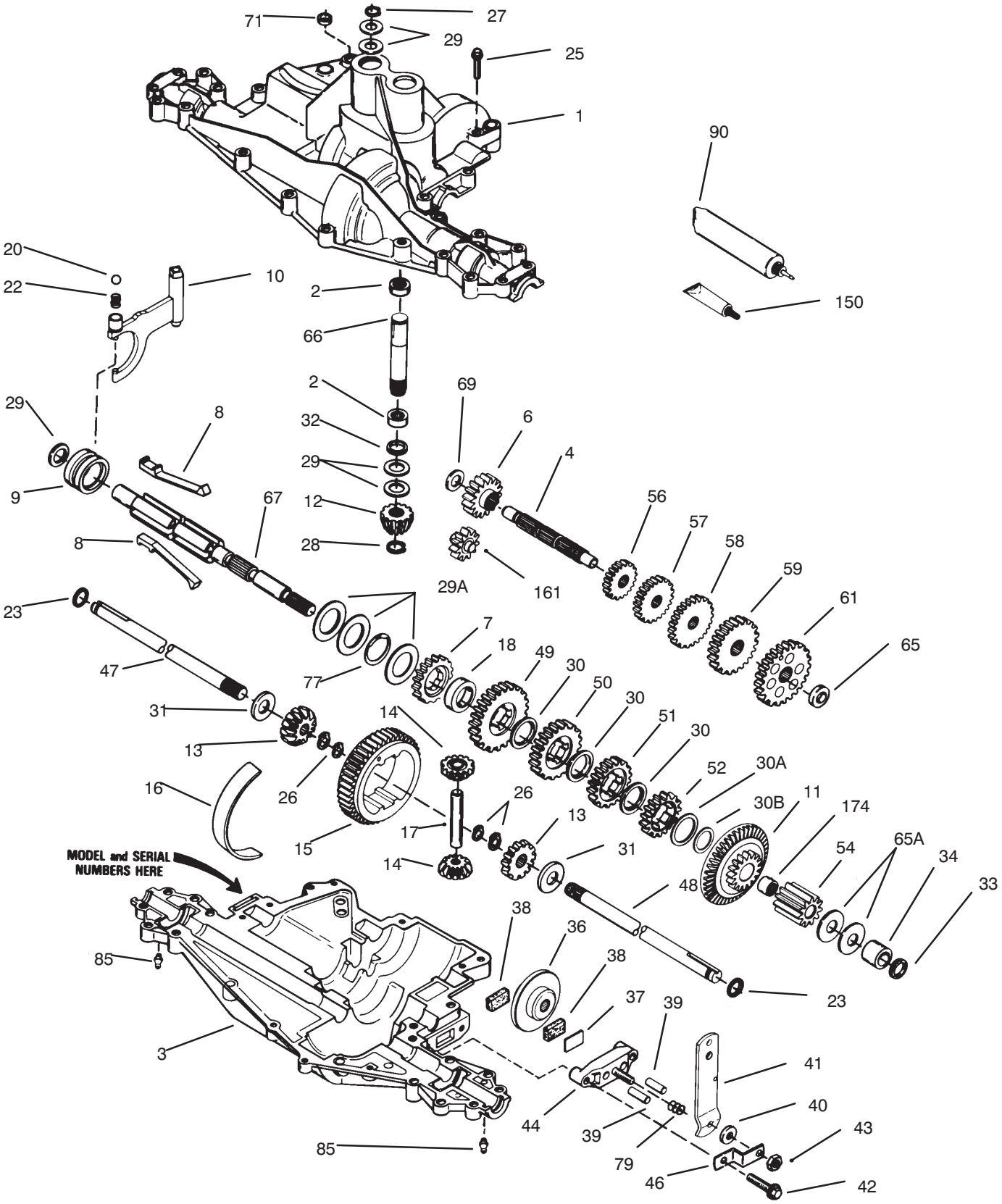

PEERLESS TRANSAXLE MODEL NO. 915–019

Ref. No.	Part No.	Description	No. Used
1	772117	Transaxle Cover	1
2	780086	Needle Bearing	2
3	770114	Transaxle Case	1
4	776300	Countershaft	1
6	778281	Spur Gear (16 Teeth)	1
7	778122A	Spur Gear (22 Teeth)	1
8	792133	Shift Key	4
9	784352	Shift Collar	1
10	784365	Shift Rod & Fork	1
11	778290	Bevel Gear & Bearing (44/16 Teeth) (Incl. Ref. #174)	1
12	778262	Bevel Pinion (14 Teeth)	1
13	778221	Bevel Gear (16 Teeth)	2
14	778068	Differential Pinion	2
15	778260	Ring Gear	1
16	786150	Bearing Strip	1
17	78139	Drive Pin	1
18	786147	Neutral Spacer	1
20	792139	Ball (3/8” dia.)	1
22	792142	Spring	1
23	788061	Seal Ring	2
25	792073	Screw	17
26	792125	Retaining Ring (pkg. of 2)	4
27	792035	Retaining Ring	1
28	788040	Retaining Ring	1
29	780072	Washer	5
29A	780090	Thrust Washer	3
30	780108	Washer	3
30A	789145	Washer	1
30B	780178	Washer	1
31	780001	Washer	2
32	792001	O–Ring	1
33	788076	O–Ring	1
34	780159	Bushing	1
36	790071	Brake Disk	1
37	790007	Brake Pad Plate	1
38	790006	Brake Pad	2
39	786026	Dowel Pin	2
40	792076	Washer	1
41	790045	Brake Lever	1
42	792073	Screw	2
43	792075	Locknut	1
44	790025	Brake Pad Holder	1
46	786086	Brake Lever Bracket	1
47	774930	Axle (16–3/4” lg.)	1
48	774931	Axle (11–9/16” lg.) (Incl. Ref. #26)	1
49	778124A	Spur Gear (30 Teeth)	1
50	778123A	Spur Gear (25 Teeth)	1
51	778122A	Spur Gear (22 Teeth)	1
52	778273	Spur Gear (19 Teeth)	1
54	778263	Spur Gear (11 Teeth)	1
56	778126A	Spur Gear (20 Teeth)	1
57	778127A	Spur Gear (25 Teeth)	1
58	778128A	Spur Gear (28 Teeth)	1
59	778129A	Spur Gear (30 Teeth)	1
61	778265	Spur Gear (34 Teeth)	1
65	780162	Washer	1
65A	780160	Washer	2
66	776299	Input Shaft (3.522” lg.)	1
67	776352	Shifter & Brake Shaft	1
69	780161	Thrust Washer	1
71	788069	Square Cut Ring	1
77	788078A	Inverted Retaining Ring (pkg. of 2)	1
79	792144	Spring	1
90	788067B	Grease (32 oz. btl. Bentonite grease)	1
150	510334	Gasket Eliminator (Loctite #515)	1
161	776302	Reverse Idler Assembly	1
174	780085	Needle Bearing	1

BRIGGS & STRATTON MODEL NO. 191707–0121–01

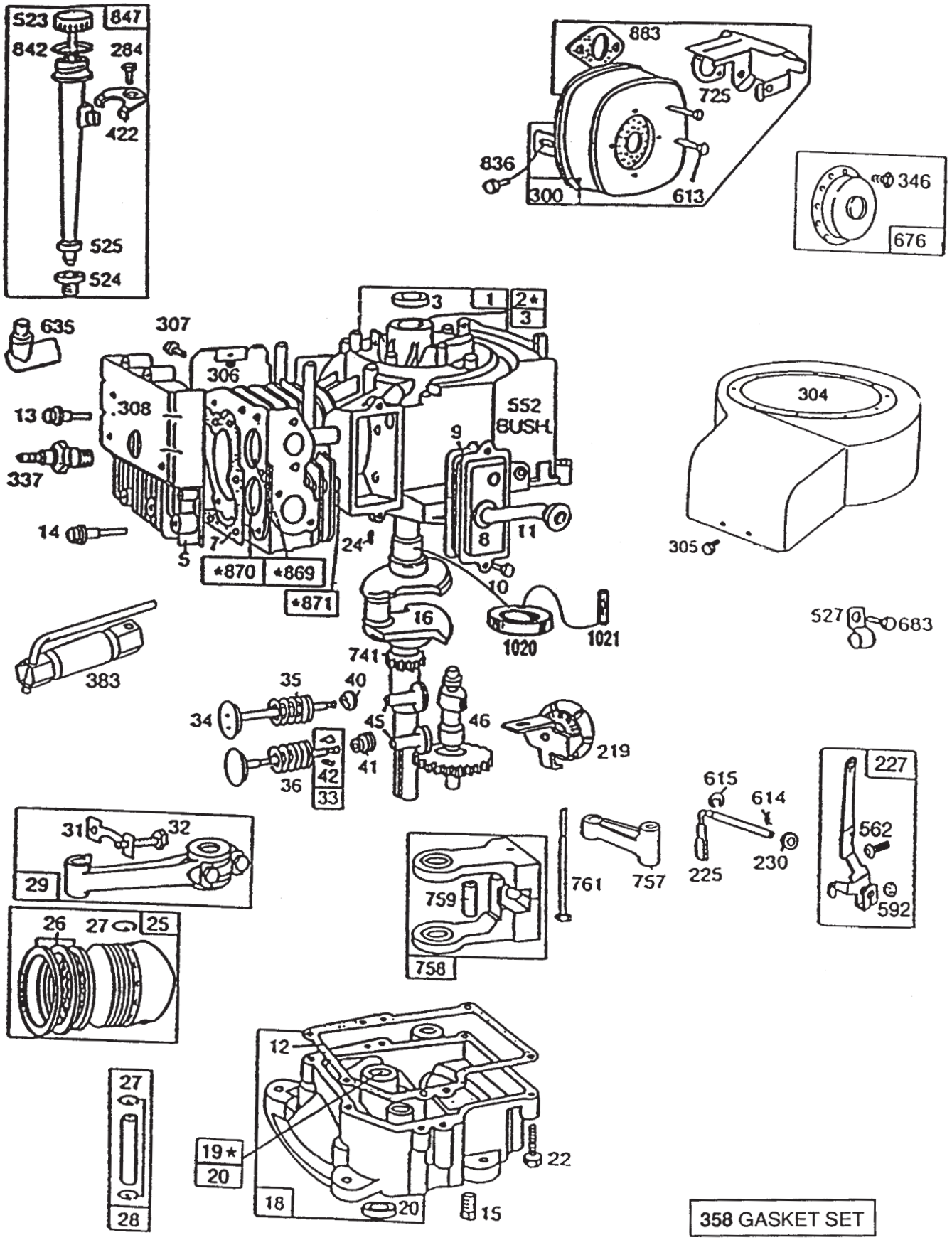

358 GASKET SET

*REQUIRES SPECIAL TOOLS TO INSTALL. SEE REPAIR INSTRUCTION MANUAL.

Assemblies include all parts shown in frames.

C–1172

BRIGGS & STRATTON MODEL NO. 191707–0121–01

Ref. No.	Part No.	Description	No. Used
1	396269	Assembly – Cylinder	1
2	399267	Bearing – Cylinder Note: Requires special tools for installation.	1
3	294606	Seal – Oil	1
5	212286	Head – Cylinder	1
*7	272163	Gasket – Head, Cylinder	1
8	391406	Assembly – Breather	1
*9	27803	Gasket – Cover, Valve	1
10	94621	Screw	1
11	280005	Tube – Breather	1
*12	271701	Gasket – Cover, Crankcase 1/64” Thick	1
*	27876	Gasket – Cover, Crankcase .005” Thick	1
*	27877	Gasket – Cover, Crankcase .009” Thick	1
13	94565	Screw – Head, Cylinder	1
14	93723	Screw – Head, Cylinder (3” Long)	1
15	94239	Plug – Drain, Oil	1
16	396876	Crankshaft Note: Order Part 94388 for timing gear pin replacement.	1
18	392548	Base – Engine	1
19	295963	Bushing – Base, Engine Note: Requires special tool for installation.	1
20	391086	Seal – Oil	1
22	93585	Screw – Base, Mounting	1
24	222698	Key – Flywheel	1
25	391673	Assy. – Piston, Std.	1
	391674	Assy. – Piston, .010” O.S.	1
	391675	Assy. – Piston, .020” O.S.	1
	391676	Assy. – Piston, .030” O.S.	1
		PISTON RING SETS Note: For Chrome Piston Ring Set – Standard Size – Order No. 299743.	
26	391669	Ring Set – Piston, Std.	1
	391670	Ring Set – Piston, .010” O.S.	1
	391671	Ring Set – Piston, .020” O.S.	1
	391672	Ring Set – Piston, .030” O.S.	1
27	68546	Lock – Piston Pin	1
28	295840	Assy.– Piston Pin, Std.	1
	295841	Assy.– Piston Pin, .005” O.S.	1
29	390402	Assy.– Rod, Connecting Note: For Connecting Rod with .020” Undersize Crankpin Bore – Order No. 390773.	1
31	222114	Lock – Screw, Conn. Rod	1
32	92659	Screw – Connecting Rod	1
33	390419	Valve – Exhaust	1
34	261055	Valve – Intake	1
35	65906	Spring – Valve, Intake	1
36	26828	Spring – Valve, Exhaust	1
40	221596	Retainer – Valve, Intake	1
41	292260	Rotocoil – Valve, Exhaust	1
42	93630	Retainer – Valve, Exhaust Rotocoil	2
45	260933	Tappet – Valve	1
46	211689	Gear – Cam	1
225	231058	Crank – Gov. (1/4” Dia.)	1
227	43935	Assy. Lever – Governor for 1/4” Dia. Crank	1
230	222450	Washer – Lever, Governor (1/4” Inside Diameter)	1
284	94419	Screw – Clamp, Mounting	1
300	398507	Muffler – Exhaust	1
304	494084	Housing – Blower	1
305	94608	Screw – Blower Hsg., Sems	1
306	224543	Shield – Cylinder	1
307	93949	Screw – Shield, Cylinder	1
308	222636	Cover – Head, Cylinder	1
337	802592	Plug – Spark	1
346	93705	Screw	1
358	299577	Gasket Set	1
383	89838	Wrench – Spark Plug	1
422	223394	Clamp – Tube, Oil Filler	1
523	391840	Cap & Dipstick – Oil Filler	1
524	68838	Seal – Tube, Filler	1
525	280133	Tube – Filler, Oil	1
527	221428	Clamp	1
552	491986	Bushing – Crank, Gov.	1
562	92613	Bolt – Lever, Governor	1
592	231082	Nut – Hex.	1
613	94042	Screw – Muffler	1
614	93306	Pin – Hair, Cotter	1
615	93307	Retainer – E–Ring	1
635	66538	Elbow – Plug, Spark	1
676	395700	Deflector – Exhaust	1
683	93572	Screw	1
725	223540	Shield – Muffler	1
741	262479	Gear – Timing	1
757	212359	Link – Counterweight	1
758	390172	Assy. – Counterweight	1
759	298909	Pin – Counterweight	1
761	93874	Screw – Counterweight	1
836	93559	Screw	1
842	270920	Seal – Cap, Filler	1
847	392066	Filler Group – Oil	1
869	211661	Seat – Valve, Intake (Std.)	1
870	211661	Seat – Valve, Exhaust (Std.)	1
871	231218	Guide – Exhaust or Intake Valve, See repair manual	1
883	272309	Gasket – Pipe, Exhaust	1
1020	261190	Eccentric	1
1021	94160	Pin – Eccentric	1

*Included in Gasket Set – Part No. 299577.

BRIGGS & STRATTON MODEL NO. 191707–0121–01

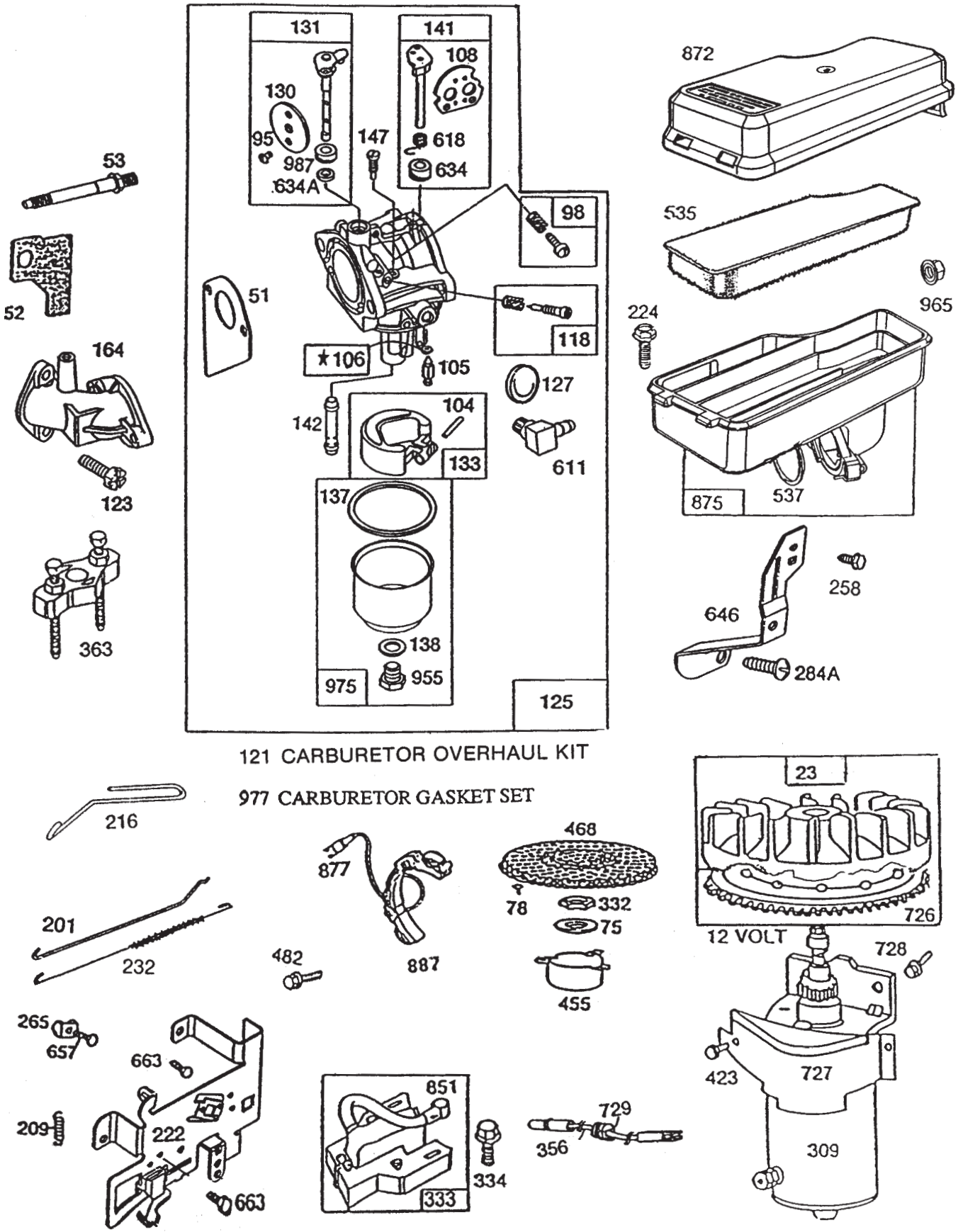

★REQUIRES SPECIAL TOOLS TO INSTALL.
SEE REPAIR INSTRUCTION MANUAL.

Assemblies include all parts shown in frames.

C–1173

BRIGGS & STRATTON MODEL NO. 191707—0121—01

Ref. No.	Part No.	Description	No. Used
223	391983	Flywheel and Ring Gear Assy. - Magneto (Incl. Aluminum Ring Gear)	1
*#51	272465	Gasket - Carburetor (Carb. to Elbow)	1
‡52	270824	Gasket - Carb. Mtg.	1
53	94637	Stud - Gasket Mtg.	1
75	224061	Washer - Spring	1
78	93805	Screw - Sem	1
*95	94098	Screw - Throttle	1
98	494382	Screw - Idle Speek	1
*104	231789	Pin - Float Hinge	1
*105	231790	Valve Assy. - Inlet Needle	1
*106	281169	Inlet Valve Seat	1
108	224540	Valve - Choke	1
118	494383	Valve - Needle	1
121	494880	Carburetor Overhaul Kit	1
123	94616	Screw - Carburetor Mtg.	1
125	494894	Carburetor Assembly	1
*127		Plug - Welch (Kit Only)	1
130	224668	Valve - Throttle	1
131	494885	Shaft & Lever - Throttle	1
133	494381	Float - Carburetor	1
*#137	281165	Gasket - Float Bowl	1
*#138	281164	Washer - Float Bowl	1
141	494380	Shaft & Lever - Choke	1
*142	494877	Nozzle - Carburetor	1
*147	231794	Screw - Nozzle	1
164	213819	Carburetor Elbow	1
201	262769	Link - Governor	1
209	260871	Spring - Governor	1
216	262768	Link - Choke	1
222	493896	Plate - Gov. Plate	1
224	94513	Screw - Sem	1
232	262787	Spring - Governor Link	1
258	94620	Screw - Hex. Tapping	1
265	221535	Clamp - Casing	1
284A	94326	Screw - Brace Mtg.	1
309		Motor - Starting (12 Volt) See Chart for Replacement Parts for Starting Motor on Illustrated Pages	1

Ref. No.	Part No.	Description	No. Used
332	92284	Nut - Flywheel	1
333	398811	Armature Assembly	1
334	93381	Screw - Armature Mtg. Sem	1
356	494328	Wire - Ground	1
363	19165	Puller - Flywheel	1
423	94073	Screw - Sem	1
455	222561	Cup - Screen Mounting	1
468	222562	Screen - Flush Rotating	1
482	93621	Screw - Sem	1
535	272405	Element - Foam Air Cleaner	1
537	281106	O-Ring - Air Cleaner	1
611	494451	Fuel Inlet Tube	1
618	262803	Spring - Choke Return	1
*634	281168	Seal - Choke Shaft	1
*634A	281167	Washer - Throttle Shaft	1
646	224614	Brace - Air Cleaner	1
657	93496	Screw - Sem	1
663	94419	Screw	1
726	392134	Gear - Ring (Aluminum) (Incl. Mtg. Parts)	1
727	395405	Cover - Starter (Incl. Mtg. Screws)	1
728	93535	Screw - Sem	1
729	281159	Clip - Lead Wire	1
851	221798	Terminal - Ignition Cable	1
872	281108	Cover - Air Cleaner	1
875	494745	Body - Air Cleaner	1
877	393814	Diode & Connector Assy.	1
887	391529	Stator Assembly - Alternator (D.C.)	1
955	94642	Screw - Fuel Bowl	1
965	94108	Nut - Lock	1
975	494378	Bowl Assy. - Carburetor	1
*987	281166	Seal - Throttle Shaft	1

*Included in Carburetor Overhaul Set - Part No. 494880.
#Included in Carburetor Gasket Set - Part No. 494385.
‡Included in Gasket Set - Part No. 299577.

BRIGGS & STRATTON MODEL NO. 257707–0124–01

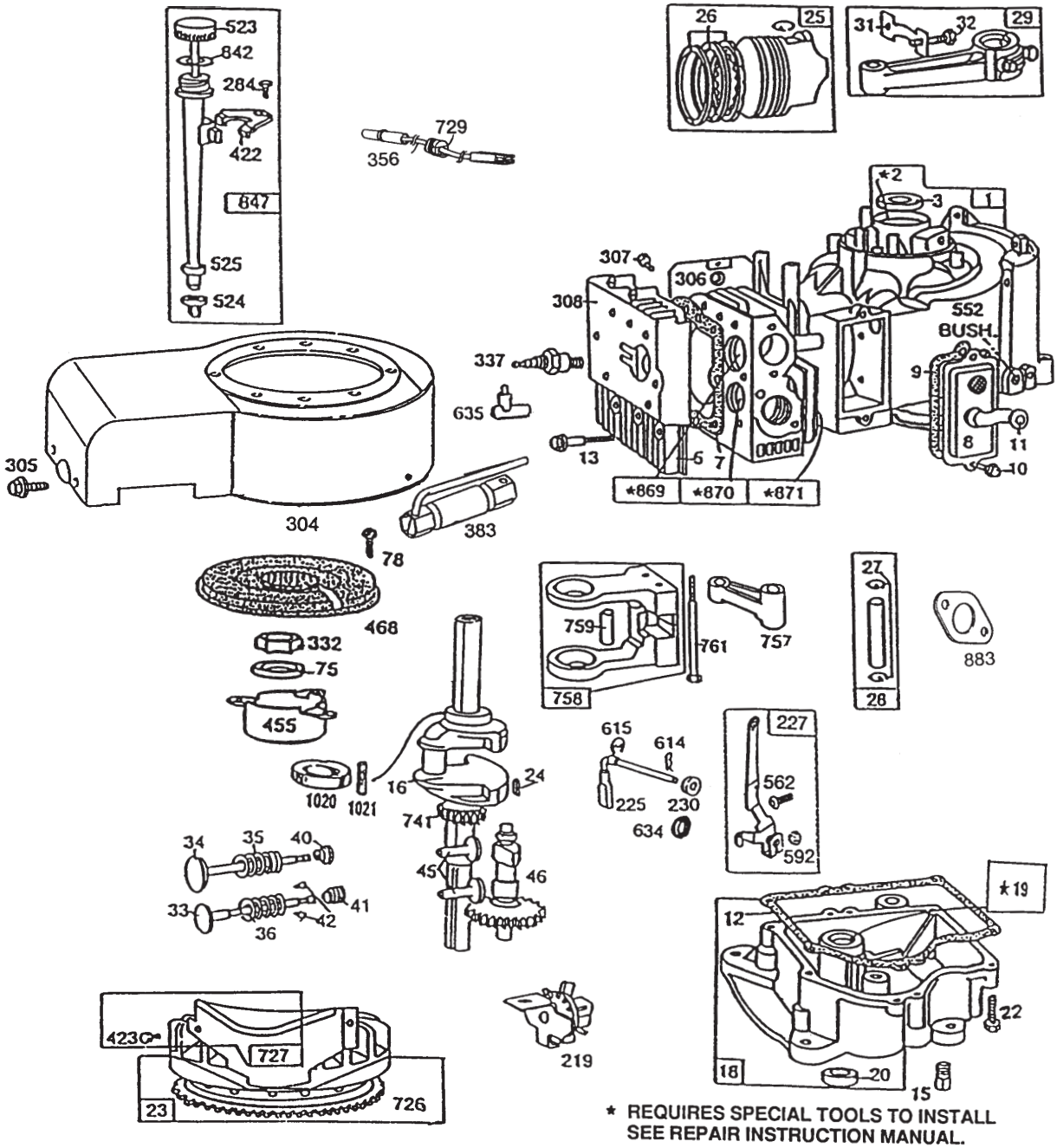

* REQUIRES SPECIAL TOOLS TO INSTALL
SEE REPAIR INSTRUCTION MANUAL.

Assemblies include all parts shown in frames.

C–1526

BRIGGS & STRATTON MODEL NO. 257707–0124–01

Ref. No.	Part No.	Description	No. Used
1	395705	Cylinder Assembly	1
2	399265	Bearing – Cylinder Note: Requires Special Tools for Installation.	1
3	391086	Seal – Oil	1
5	212914	Head – Cylinder	1
*7	271866	Gasket – Cylinder Head	1
8	391406	Breather Assembly	1
*9	27803	Gasket – Valve Cover	1
10	94621	Screw – Sem	1
11	280100	Tube – Breather	1
*12	271702	Gasket – Crankcase Cover (1/64" Thick)	1
*	270915	Gasket – Crankcase Cover (.005" Thick)	1
*	270916	Gasket – Crankcase Cover (.009" Thick0	1
13	93723	Screw – Cylinder Head	1
15	94239	Plug – Oil Drain	1
16	491647	Crankshaft Note: Order 94196 for Timing Gear Key.	1
18	391784	Sump – Engine	1
19	490666	Bushing – Sump Note: Requires Special Tools for Installation.	1
20	291675	Seal – Oil	1
22	93585	Screw – Sump Mtg.	1
23	391988	Flywheel & Ring Gear Assy.	1
24	222698	Key – Flywheel	1
25	394661	Piston Assy. (Standard)	1
	394662	Piston Assembly (.010" O.S.)	1
	394663	Piston Assembly (.020" O.S.)	1
	394664	Piston Assembly (.030" O.S.)	1
		PISTON RING SETS; Note: For Chrome Ring Set (Standard Size) Order No. 392331.	1
26	391780	Ring Set – Piston (Std.)	1
	391781	Ring Set – Piston (.010" O.S.)	1
	391782	Ring Set – Piston (.020" O.S.)	1
	391783	Ring Set – Piston (.030" O.S.)	1
27	260924	Lock – Piston Pin	1
28	299691	Pin Assy. – Piston (Std.)	1
	391286	Pin Assy. – Piston (.005" O.S.)	1
29	490348	Rod Assy. Conn Note: For Connecting Rod With .020" Undersize Crankpin Bore, Order No. 490469.	1
31	222299	Lock – Conn. Rod Screw	1
32	92909	Screw – Conn. Rod	1
33	261185	Valve – Exhaust	1
34	261462	Valve – Intake	1
35	65906	Spring – Intake Valve	1
36	26828	Spring – Exhaust Valve	1

Ref. No.	Part No.	Description	No. Used
40	221596	Retainer – Intake Valve	1
41	292260	Rotocoil – Ex. Valve	1
42	93630	Retainer – Exhaust Valve Rotocoil	2
45	262248	Tappet – Valve	1
46	212897	Gear – Cam	1
75	224061	Washer – Spring	1
78	93805	Screw – Sem	1
219	490815	Oil Slinger, Governor Gear and Bracket Assembly	1
225	231058	Crank – Governor	1
227	493935	Lever Assy. – Governor	1
230	222450	Washer – Governor Crank	1
284	94419	Screw – Clamp Mtg.	1
304	494087	Screw – Blower Mtg. Hsg.	1
306	224542	Shield – Cylinder	1
307	93949	Screw – Cylinder Shield Mtg. Sem	1
308	222725	Cover – Cylinder Head	1
332	92284	Nut – Hex. (Flywheel Mtg.)	1
337	802592	Plug – Spark	1
356	494328	Wire Assy.	1
358	393411	Gasket Set	1
383	89838	Wrench – Spark Plug	1
422	223394	Clamp – Oil Filler Tube	1
423	93984	Screw – Hex. Hd. (Shield Mtg.)	1
455	222561	Cup – Screen Mtg.	1
468	222562	Screen – Flush Rotating	1
523	391841	Cap & Dipstick – Oil Filler	1
524	68838	Seal – Filler Tube	1
525	280134	Tube – Oil Filler	1
552	231597	Bushing – Governor Crank	1
562	92613	Bolt – Governor Lever	1
592	231082	Nut – Hex.	1
614	93306	Cotter – Pin	1
615	93307	Retainer – E–Ring	1
634	491323	Seal – Oil	1
635	66538	Elbow – Spark Plug	1
726	392134	Gear – Ring (Includes Mtg. Parts)	1
727	395405	Shield – Starter	1
729	281159	Clip – Lead Wire	1
741	262135	Gear – Timing	1
757	212359	Link – Counterweight	1
758	391373	Counterweight Assembly	1
759	298909	Pin – Counterweight	1
761	93875	Screw – Counterweight	1
842	270920	Seal – Oil Filler Cap	1
847	392067	Fill Group – Oil	1
869	261463	Seat – Intake Valve (Std.)	1
870	213316	Seat – Exhaust Valve (Std.)	1
871	261961	Guide – Exhaust Valve Note: 231218 Guide–Intake Valve (Brass) See Repair Manual.	1
883	272293	Gasket – Exhaust Pipe	1
1020	261242	Eccentric	1
1021	94160	Pin – Eccentric	1

*Included in Gasket Set – Part No.393411

BRIGGS & STRATTON MODEL NO. 257707–0124–01

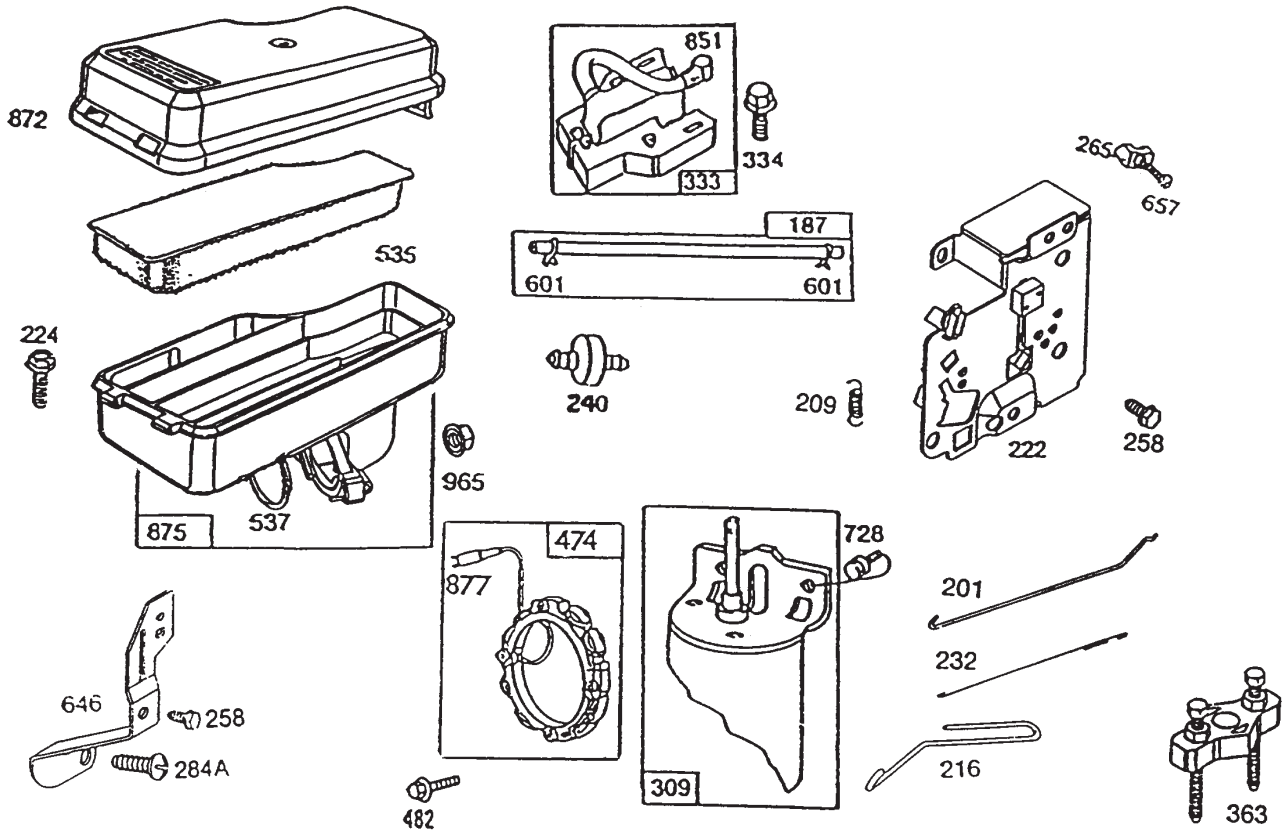

121 Carburetor Overhaul Kit **977 Carburetor Gasket Set**

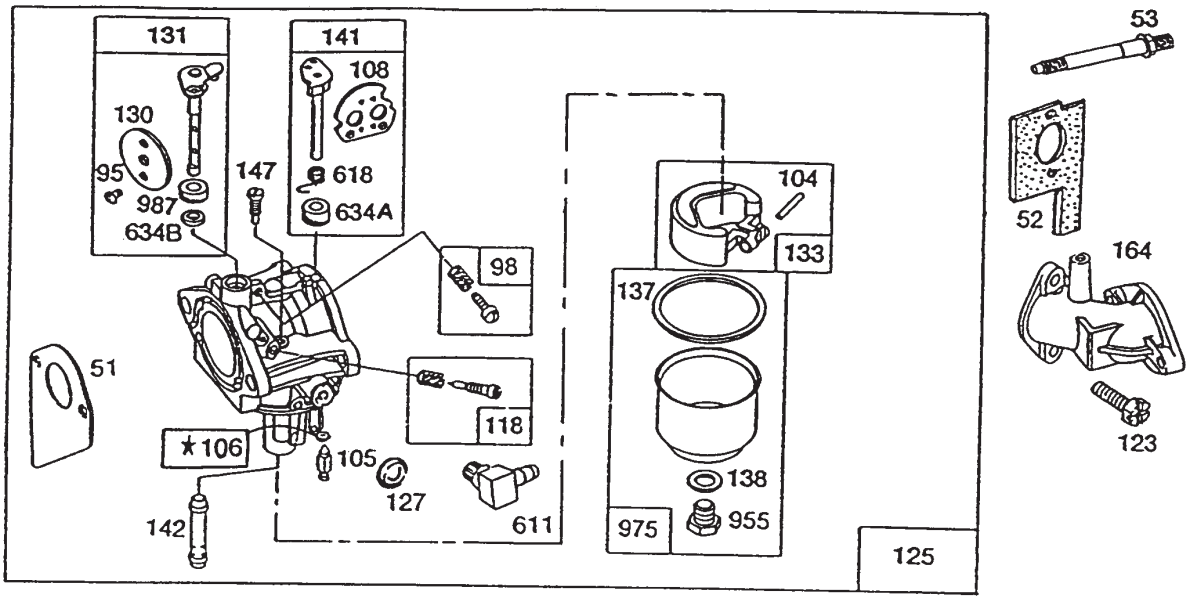

★ REQUIRES SPECIAL TOOLS TO INSTALL SEE REPAIR INSTRUCTION MANUAL.

Assemblies include all parts shown in frames.

C–1527

BRIGGS & STRATTON MODEL NO. 257707–0124–01

Ref. No.	Part No.	Description	No. Used
●□51	272465	Gasket – Carburetor (Carb. to Elbow)	1
*52	270872	Gasket – Carburetor Mtg.	1
53	94637	Stud – Carburetor Mtg.	1
●95	94098	Screw – Throttle	1
98	494382	Screw – Idle Speed	1
●104	231789	Pin – Float Hinge	1
●105	231790	Valve Assy. – Inlet Needle	1
●106	281169	Inlet Valve Seat	1
108	224666	Valve – Choke	1
118	494383	Valve – Needle	1
121	494882	Carburetor Overhaul Kit	1
123	94616	Screw – Carburetor Mtg.	1
125	494881	Carburetor Assembly	1
●127		Plug – Welch (Sold in Kit Only)	1
130	224539	Valve – Throttle	1
131	494379	Shaft & Lever – Throttle	1
133	494381	Float – Carburetor	1
●□137	281165	Gasket – Float Bowl	1
●□138	281164	Washer – Float Bowl Screw	1
141	494879	Shaft and Lever – Choke	1
●142	494878	Nozzle/Jet – Carburetor	1
●147	231794	Pilot – Jet	1
164	231819	Elbow – Carburetor	1
187	393815	Hose Assy. – Fuel	1
201	262767	Link – Governor	1
209	261306	Spring – Governor	1
216	262778	Link – Choke	1
222	494041	Plate – Governor Control	1
224	94513	Screw – Hex. Head	1

Ref. No.	Part No.	Description	No. Used
232	262785	Spring – Governor Link	1
240	298090	Filter – Fuel	1
258	94620	Screw – Hex. Head	1
265	221535	Clamp – Casing	1
284A	94326	Screw – Pan Head	1
309	394805	Motor and Drive Assembly	1
333	398811	Armature – Magneto	1
334	93381	Screw – Armature Mtg. Sem.	1
363	19203	Puller – Flywheel	1
474	392595	Stator Assy. – (Tri Circuit)	1
482	93621	Screw – Sem	1
535	272405	Element – Air Cleaner	1
537	281106	O–Ring	1
601	93053	Clamp – Hose	1
611	494451	Fuel Inlet Tube	1
618	262803	Spring – Choke	1
●634A	281168	Seal – Choke Shaft	1
●634B	281167	Washer – Throttle Shaft	1
646	224546	Brace – Air Cleaner	1
657	93496	Screw – Sem	1
728	93535	Screw – Hex. Head	1
851	221798	Terminal – Ignition Cable	1
872	281108	Cover – Air Cleaner	1
875	494745	Body – Air Cleaner	1
877	393537	Connector Assy. – Stator	1
955	94642	Screw – Fuel Bowl	1
965	94108	Locknut	1
975	494378	Bowl Assy. – Carburetor	1
977	494385	Carburetor Gasket Kit	1
●987	281165	Seal – Throttle Shaft	1

● Included in Carburetor Overhaul Kit – Part No. 494882.
□ Included in Carburetor Gasket Set – Part No. 494385.
* Included in Gasket Set – Part No. 393411.

BRIGGS & STRATTON MODEL NO. 286707–0119–01

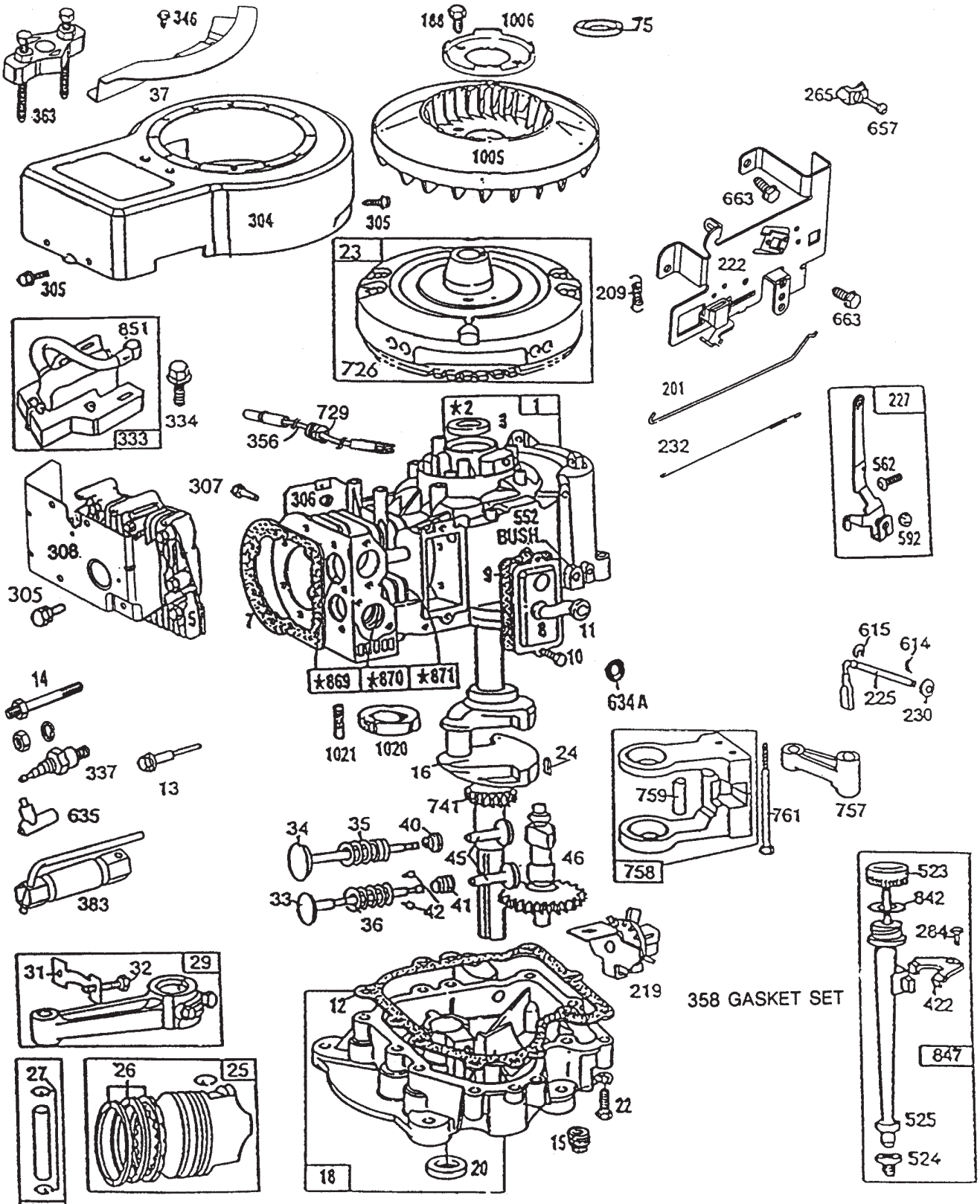

★SPECIAL TOOLS REQUIRED TO INSTALL.

SEE REPAIR INSTRUCTION MANUAL.

Assemblies include all parts shown in frames.

C–0788

BRIGGS & STRATTON MODEL NO. 286707—0119—01

Ref. No.	Part No.	Description	No. Used
1	490450	Cylinder Assembly	1
2	399265	Bearing — Cylinder Note: Requires Special Tools for Installation.	1
3	391086	Seal — Oil	1
5	494240	Head — Cylinder	1
7	271866	Gasket — Cylinder Head	1
8	391406	Breather Assembly	1
9	27803	Gasket — Valve Cover	1
10	94621	Screw — Sem	1
11	280100	Tube — Breather	1
12	271916	Gasket — Crankcase Cover (1/64" Thick)	1
*	271997	Gasket — Crankcase Cover (.005" Thick)	1
*	271996	Gasket — Crankcase Cover (.009" Thick)	1
13	94622	Screw — Cylinder Head (3" Long)	1
14	93781	Stud — Cylinder Head Uses: 90366 Lockwasher, 93203 Nut 231109 Spacer	1
15	94239	Plug — Oil Drain	1
16	490466	Crankshaft Note: Order Part Number 94196 For Timing Gear Key	1
18	494238	Base — Engine	1
20	291675	Seal — Oil	1
22	94624	Screw — Base Mtg. Sem	1
23	492326	Flywheel & Ring Gear Assy. Magneto	1
24	222698	Key — Flywheel	1
25	394661	Piston Assy. — Standard	1
	394662	Piston Assy. — .010" O.S.	1
	394663	Piston Assy. — .020" O.S.	1
	394664	Piston Assy. — .030" O.S.	1
		PISTON RING SETS Note: For Chrome Ring Set Standard Size, Order No. 392331	
26	391780	Ring Set — Piston Std.	1
	391781	Ring Set — Piston .010" O.S.	1
	391782	Ring Set — Piston .020" O.S.	1
	391783	Ring Set — Piston .030" O.S.	1
27	260924	Lock — Piston Pin	1
28	299691	Pin Assy. — Piston Std.	1
	391286	Pin Assy. — Piston .005" O.S.	1
29	490348	Rod Assembly — Connecting Note: For Connecting Rod with .020" Undersize Crankpin Bore, Order No. 490469.	1
31	222299	Lock — Conn. Rod Screw	1
32	92909	Screw — Connecting Rod	1
33	262246	Valve — Exhaust	1
34	262247	Valve — Intake	1
35	65906	Spring — Intake Valve	1
36	26828	Spring — Exhaust Valve	1
37	223752	Guard — Flywheel	1
40	221596	Retainer — Intake Valve	1
41	292260	Rotocoil — Exhaust Valve	1
42	93630	Retainer — Exhaust Valve Rotocoil	1
45	262248	Tappet — Valve	1
46	212897	Gear — Cam	1
75	224061	Washer — Spring	1
188	93535	Screw — Sem Fan Mount. (3/4" Long)	1
201	262767	Link — Governor	1
209	260871	Spring — Governor	1
219	490815	Oil Slinger, Governor Gear, & Bracket Assembly	1
222	493896	Plate — Governor Control	1
225	231058	Crank — Governor (1/4" Dia.)	1
227	493935	Lever Assembly — Governor	1
230	222450	Washer — Governor Crank (1/4" Inside Diameter)	1
232	262785	Spring — Governor Link	1
265	221535	Clamp — Casing	1
284	94419	Screw — Clamp Mounting	1
304	494269	Housing Blower (Red)	1
305	94619	Screw — Blower Housing Mounting, Sem	1
306	224545	Shield — Cylinder	1
307	94623	Screw — Cylinder Shield Mounting, Sem	1
308	491490	Cover — Cylinder Head	1
333	492341	Armature — Magneto	1
334	93381	Screw — Armature Mtg. Sem	1
337	802592	Plug — Spark	1
346	93705	Screw — Hex. Hd.	1
356	494328	Wire Assembly	1
358	494241	Gasket Set	1
363	19203	Puller — Flywheel	1
383	89838	Wrench — Spark Plug	1
422	224390	Clamp — Oil Filler Tube	1
523	490327	Cap & Dipstick — Oil Filler	1
524	68838	Seal — Filler Tube	1
525	280741	Tube — Oil Filler	1
552	231597	Bushing — Governor Crank (1/4" Inside Diameter)	1
562	92613	Bolt — Governor Lever	1

BRIGGS & STRATTON MODEL NO. 286707–0119–01

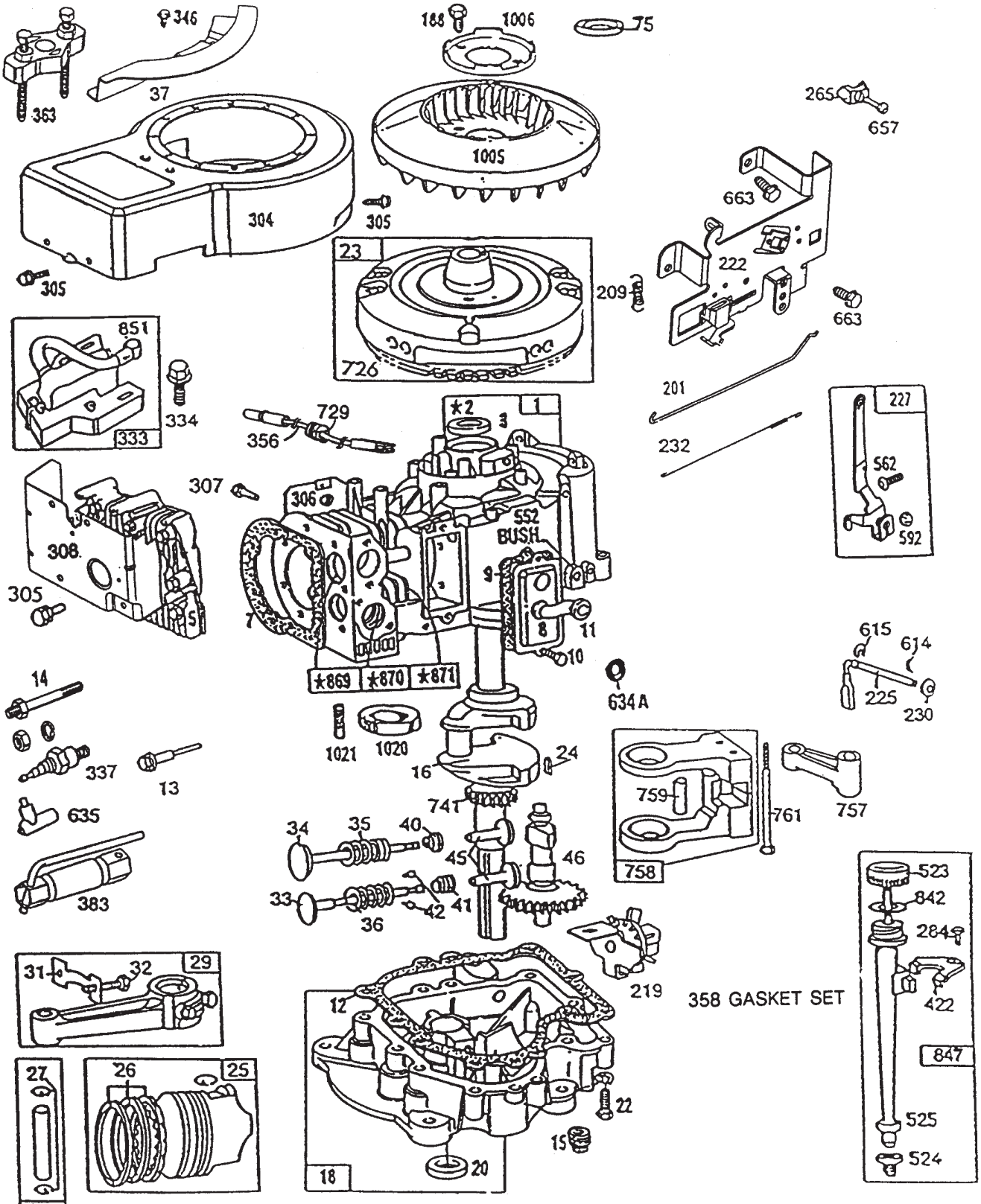

★SPECIAL TOOLS REQUIRED TO INSTALL.

SEE REPAIR INSTRUCTION MANUAL.

Assemblies include all parts shown in frames.

C–0788

BRIGGS & STRATTON MODEL NO. 286707—0119—01

Ref. No.	Part No.	Description	No. Used
592	231082	Nut — Hex. (10—24)	1
614	93306	Cotter — Hair Pin	1
615	93307	Retainer — Ring	1
634A	491323	Seal — Governor	1
635	66538	Elbow — Spark Plug	1
657	93496	Screw — Sem	1
663	94620	Screw — Hex. Hd.	1
726	392134	Gear — Ring (Incl. Mounting Parts)	1
729	281159	Clip — Lead Wire	1
741	262135	Gear — Timing	1
757	212359	Link — Counterweight	1
758	399891	Counterweight Assembly	1
759	298909	Pin — Counterweight	1
761	93875	Screw — Counterweight	1
842	270920	Seal — Oil Filler Cap	1
847	490474	Fill Group — Oil	1
851	221798	Terminal — Ignition Cable	1
869	261463	Seat — Intake Valve (Std.)	1
870	213316	Seat — Exhaust Valve (Std.)	1
871	261961	Guide — Exhaust Valve Note: 231218 Guide — Intake Valve (Brass) See Repair Manual	1
1005	280687	Fan — Flywheel	1
1006	223726	Retainer — Fan	1
1020	262243	Eccentric	1
1021	94160	PIn — Eccentric	1
*	494241	Kit — Gasket Set (Incl. Ref. #3, 7, 9, 12, 20, & 634A)	1

*Not Illustrated

BRIGGS & STRATTON MODEL NO. 286707–0119–01

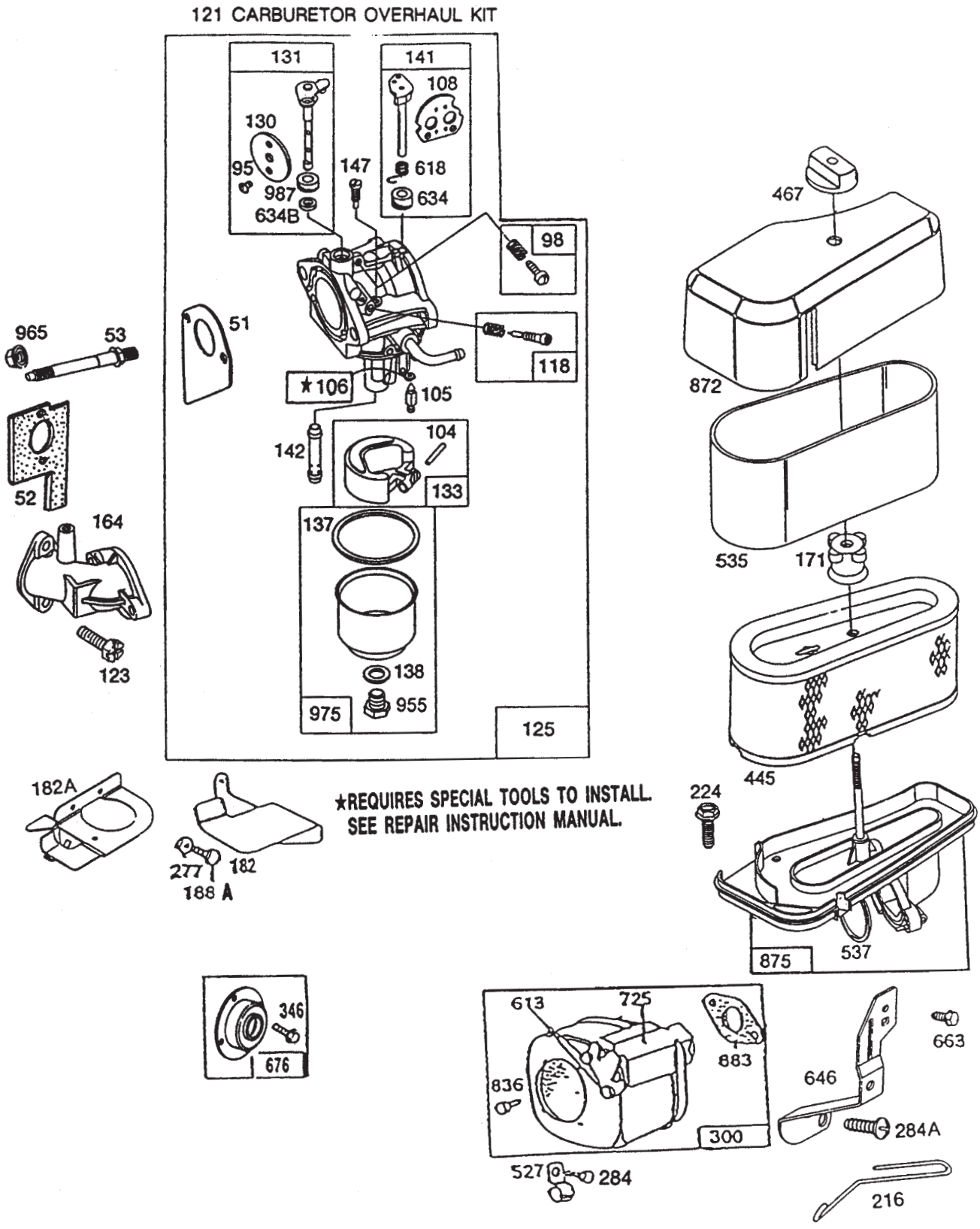

Assemblies include all parts shown in frames.

C–0789

BRIGGS & STRATTON MODEL NO. 286707—0119—01

Ref. No.	Part No.	Description	No. Used
51	272465	Gasket — Carburetor (Carburetor to Elbow)	1
52	270872	Gasket — Carburetor (Elbow to Cylinder)	1
53	94637	Stud — Carburetor, Mount.	1
95	94098	Screw — Throttle	1
98	494382	Screw — Idle Speed	1
104	231789	Pin — Float Hinge	1
105	231790	Valve Assembly Inlet Needle	1
106	281169	Inlet Valve Seat	1
108	224540	Valve — Choke	1
118	494383	Valve — Needle	1
121	494384	Kit — Carburetor Overhaul	1
123	94616	Screw — Elbow Mounting	1
125	494502	Carburetor Assembly	1
130	224539	Valve — Throttle	1
131	494379	Shaft & Lever, Throttle	1
133	494381	Float — Carburetor	1
137	281165	Gasket — Float Bowl	1
138	281164	Washer — Float Bowl Screw	1
141	494380	Shaft & Lever — Choke	1
142	494537	Nozzle Jet — Carburetor Note: 494499 High Altitude Kit Includes: 231796 Pilot Jet (High Altitude) 281164 Seat—Bowl Screw 494386 Nozzle High Altitude	1
147	231794	Pilot — Jet	1
164	213819	Carburetor j— Elbow	1
171	281051	Nut — Air Cleaner Mounting	1
182	223925	Bracket — Fuel Tank (R.H.)	1
182A	223866	Bracket — Fuel Tank (L.H.)	1
188A	93634	Screw — Sem (7/8" Long)	1
216	262766	Link — Choke	1

Ref. No.	Part No.	Description	No. Used
224	94513	Screw — Air Cleaner, Sem	1
277	22776	Washer — Flat	1
284	94419	Screw — Clamp Mounting	1
284A	94326	Screw — Air Cleaner	1
300	491413	Muffler — Exhaust	1
346	93705	Screw — Hex. Head	1
445	493909	Cartridge — Air Cleaner	1
467	493903	Knob — Air Cleaner	1
527	221428	Clamp	1
535	272403	Element — Air Cleaner	1
537	281106	O—Ring — Air Cleaner	1
613	93927	Screw — Hex. Head	1
618	262803	Spring — Choke Return	1
634	281168	Seal — Choke Shaft	1
634B	281167	Washer — Throttle Shaft	1
646	224546	Brace — Air Cleaner	1
663	94620	Screw — Hex. Head	1
676	396903	Deflector — Muffler	1
725	223023	Shield — Muffler	1
836	94513	Screw — Hex. Head	1
872	281104	Cover — Air Cleaner	1
875	494237	Body — Air Cleaner	1
883	270917	Gasket — Exhaust Pipe	1
955	94642	Screw — Fuel Bowl	1
965	94108	Locknut — Air Cleaner, Mtg.	1
975	494378	Bowl Ass'y — Carburetor	1
977	494385	Kit — Gasket, Carburetor	1
987	281166	Seal — Throttle Shaft	1
*	494384	Kit — Overhaul, Carburetor (Incl. Ref. #51, 95, 104, 105, 106, 137, 138, 142, 147, 634, 634B & 987)	1
*	494385	Gasket Set — Carburetor (Incl. Ref. #51, 137 & 138)	1
*	494241	Gasket Set (Incl. Ref. #537 & 883)	1

*Not Illustrated

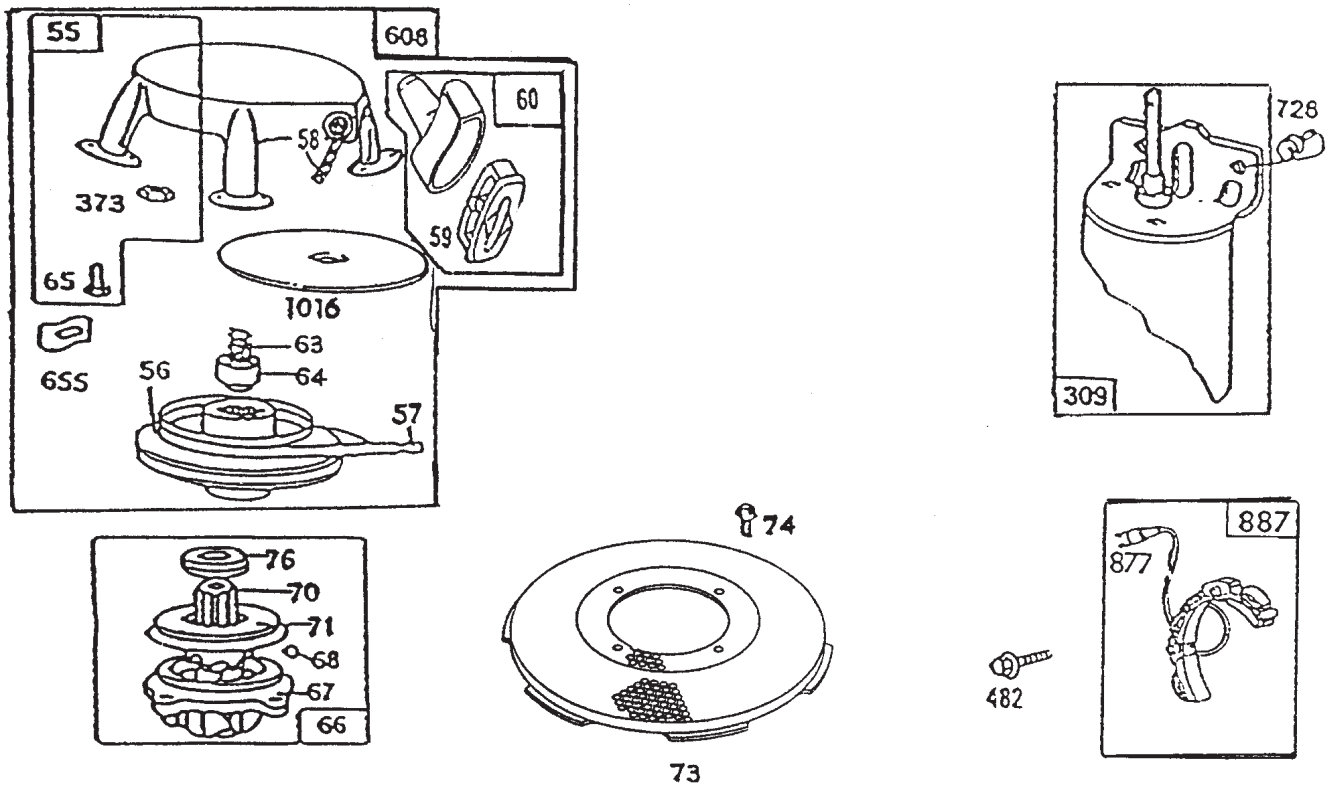

Assemblies include all parts shown in frames.

C–0787

REWIND – BRIGGS & STRATTON NO. 286707–0119–01

Ref. No.	Part No.	Description	No. Used
55	393576	Housing – Rewind Starter (Includes 63" Rope)	1
56	295871	Pulley – Rewind Starter	1
57	490179	Spring – Rewind Starter	1
58	66884	Rope – Rewind Starter (63" Long)	1
59	490653	Insert – Starter Handle	1
60	490652	Handle – Rewind Starter	1
63	260414	Spring – Ratchet	1
64	230543	Adapter – Ratchet Spring	1
65	94128	Screw – Hex. Hd. Sem	1
66	399671	Clutch Assembly – Rewind Starter	1
67	394897	Housing – Starter Clutch	1
68	63770	Ball – Clutch	1
70	298799	Ratchet – Rewind Starter Clutch	1
71	221653	Washer – Retainer	1

Ref. No.	Part No.	Description	No. Used
73	223859	Screen – Rotating	1
74	93042	Screw – Sem	1
76	68238	Washer – Ratchet, Sealing	1
309		Motor – Starting (12 Volt) See Illustrated Pages for Replacement Parts for Starter Motor.	1
373	92987	Nut – Hex.	1
482	93621	Screw – Sem	1
608	390391	Starter Assembly – Rewind	1
655	222598	Anchor – Spring	1
728	94627	Screw – Sem	1
877	393814	Diode and Connector Assy. Alternator (D.C.)	1
887	391529	Stator Assembly Alternator (D.C.)	1
1016	490817	Spacer	1

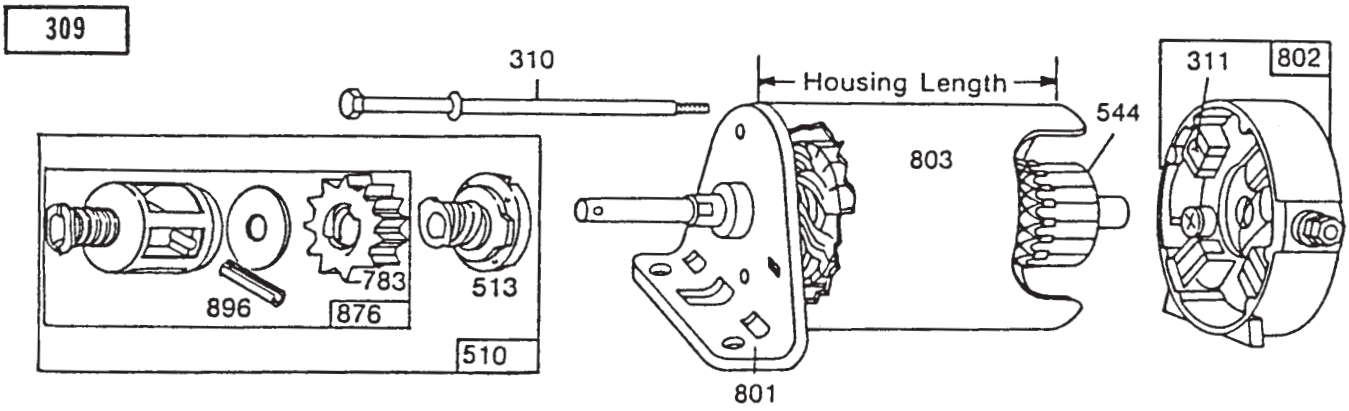

NOTE:
To identify Briggs & Stratton manufactured starter motors, measure the housing length.

C–0784

STARTER – BRIGGS & STRATTON NO. 191707–0121–01, 257707–0124–01 & 286707–0119–01

Ref. No.	Part No.	Description	No. Used
309	394805	Motor & Drive Assembly	1
309	494198	Motor & Drive Assembly (Model 286707–0119–01)	1
310	94003	Thru Bolt Assembly	1
310	94004	Thru Bolt Assembly (Model 286707–0119–01)	1
311	395538	Brush Assembly	1
510	490421	Drive Assembly (Incl. Ref. #513, 783, 876 & 896)	1
513	398003	Clutch Assembly	1
544	390837	Armature Assembly	1
544	391160	Armature Assembly (Model 286707–0119–01)	1

Ref. No.	Part No.	Description	No. Used
783	280104	Gear	1
801	394856	Drive End Cap Assembly (Incl. Brush Set)	1
802	395537	End Cap Assembly Commutator	1
803	398159	Housing Assembly (3–21/32” Long)	1
803	494205	Housing Assembly (4–3/8” Long) (Model 286707–0119–01)	1
876	490467	Retainer & Pin	1
896	94288	Roll Pin	1

TORO PART NUMBER INDEX

Part No.	Description	Pg. No.	Ref. No.	Qty.
116397	Relay	6	11	1
147665	Screw – Phillips Hd.	6	1	2
147665	Screw – Phillips Hd.	4	1	2
3–6498	Washer – Thrust	2	5	5
12–5820	Pulley – Idler	10	35	1
12–8799	Loose Parts – Model 70080, 70120 & 70140	1	*	1
12–8809	Loose Parts – Model 70080, 80120 & 70140	1	*	1
12–8819	Loose Parts – Model 70042	1	*	1
12–8829	Loose Parts – Model 70042	1	*	1
12–9020	Retainer – Belt	10	34	1
14–9999	Deck – Cutting	15	41	1
14–9999	Deck – Cutting, Recycler	14	49	1
19–1470	Bolt – Shoulder	5	20	1
23–0660	Switch – Ignition	4	10	1
26–0671	Bolt – Blade	15	31	1
26–0671	Bolt – Blade	14	39	2
26–4830	Decal – Instructions	2	39	1
27–9080	Bearing – Flange	2	15	4
28–0380	Spacer – Axle, Front	2	24	1
28–0540	Bolt – Shoulder	5	8	1
28–2480	Washer	12	15	2
28–2480	Washer	2	43	2
28–7350	Post – Pivot	14	16	1
28–7350	Post – Pivot	15	17	1
28–7890	Module – Interlock	6	11	1
28–8010	Spring – Torsion	14	10	1
28–8010	Spring – Torsion	15	10	1
28–8070	Lanyard	14	55	1
28–8080	Boot – Terminal	9	22	1
28–8130	Pin – Chute, Locking	14	54	1
33–4750	Blade	15	32	1
38–1420	Switch – Interlock	7	2	1
38–1420	Switch – Interlock	8	2	1
40–6230	Spring – Torsion	15	44	1
40–6230	Spring – Torsion	14	51	1
44–5720	Baffle – Deck	15	13	1
44–5930	Assembly – Deflector	14	11	1
44–5930	Assembly – Deflector	15	11	1
47–0010	Arm – Suspension, Front	2	13	2
47–0540	Pedal	3	19	2
47–0550	Bracket – Brake, Pedal	3	17	1
47–0560	Bracket – Clutch, Pedal	3	12	1
47–0570	Spacer – Pedal	3	16	3
47–0590	Spindle – L.H.	2	*	1
47–0600	Spindle – R.H.	2	4	1
47–0610	Tie Rod – Adjustable	2	34	1
47–0700	Bearing – Flange	2	27	1
47–0760	Support – Axle, Front	2	11	1
47–0770	Shaft – Pivot, Pedal	3	8	1
47–0780	Retainer – Shaft	3	9	1
47–0930	Footrest – R.H.	1	22	1
47–0940	Footrest – L.H.	1	16	1
47–0960	Spring – Compression	14	3	1
47–0960	Spring – Compression	15	3	1
47–1140	Retainer – Spring, Top	14	2	2
47–1140	Retainer – Spring, Top	15	2	2
47–1180	Bracket – Engagement	14	1	1
47–1180	Bracket – Engagement	15	1	1
47–1200	Shaft – Adjusting	14	4	1
47–1200	Shaft – Adjusting	15	4	1
47–1290	Brake – Parking	1	10	1
47–1440	Tread – Foot	1	15	2
47–1840	Bracket – Height–of–Cut	5	13	1
47–1850	Lever – Height–of–Cut	5	6	1
47–1910	Solenoid	6	12	1
47–2060	Bracket – Brake, Parking	1	19	1
47–2961	Hose – Fuel Line	10	9	1
47–2981	Hose – Fuel Line	10	9	1
47–2986	Hose – Fuel Line	10	9	1
49–3240	Assy. – Wheel, Steering	4	5	1
54–9220	Decal – Caution, Deflector	14	12	1
54–9220	Decal – Caution, Deflector	15	12	1
55–3570	Cap – Fuel	10	14	1
56–2540	Tube – Vent, Battery	9	37	1
56–6590	Bolt – Wheel	15	27	2
56–6590	Bolt – Wheel	14	33	2
56–7030	Body – Spindle	15	36	1
56–7030	Body – Spindle	14	44	1
56–7050	Tank – Fuel	10	15	1
56–7070	Spring – Torsion, Clutch	3	11	1
56–7080	Spring – Torsion, Brake	3	18	1
56–7130	Tower – Front	1	4	1
56–7140	Tower – Rear	1	8	1
56–7170	Guide – Shaft, Steering	1	6	1
56–7180	Cover – Front	2	30	1
56–7240	Bracket – Retaining, Spring	3	3	1
56–7400	Arm – Lever, H.O.C.	5	24	1
56–7430	Pin – Support	13	22	2
56–7470	Bracket – Rack, Steering	2	33	1
56–7500	Shaft – Steering	2	31	1
56–7520	Bushing – Sector	2	22	1
56–7530	Bolt – Shoulder	2	20	1
56–7570	Rod – Engagement	3	15	1
56–7650	Tube – Pivot	3	14	1
56–7670	Cable – Battery, Positive	10	21	1
56–7670	Cable – Positive	6	17	1
56–7710	Hold Down – Battery	9	26	1
56–7720	Post – Battery	9	21	1
56–7810	Decal – Brake, Parking	1	9	1
57–4040	Bracket – Mounting, Front	10	13	1
57–4050	Bracket – Mounting, Rear	10	11	1
57–4060	Retainer – Front	10	16	1
57–4070	Retainer – Rear	10	20	1
57–9940	Spring – Brake	12	17	1
60–9730	Guide – Belt	15	23	2
60–9730	Guide – Belt	14	26	2
61–9760	Wheel – Deck	15	26	2
61–9760	Wheel – Deck	14	32	2
61–9780	Cap – Hub	12	14	2
61–9780	Cap – Hub	2	44	2
62–3760	Screw – Cap Hex. Hd.	10	27	1
62–3930	Spring – Extension	5	5	1
62–3930	Spring – Extension	3	6	1
62–4300	Pad – Battery	9	25	1
62–5480	Isolator – Seat	8	11	4
62–5490	Support – Fuel Line	10	10	1
63–5540	Base – Seat	7	3	1
63–5540	Base – Seat	8	3	1
63–5670	Tube – Bumper, Seat Rod	8	7	1
63–5670	Tube – Bumper, Seat Rod	7	8	1
63–5830	Link – Suspension, Deck	5	16	2
63–8360	Key	4	6	1
65–2920	Pad – Pedal, Foot	3	5	2
65–5670	Bolt – Shoulder	5	21	1

*Not Illustrated

TORO PART NUMBER INDEX (Cont.)

Part No.	Description	Pg. No.	Ref. No.	Qty.
65–5670	Screw – Shoulder	9	34	1
66–1340	Decal – Danger	15	28	1
66–1340	Decal – Danger	14	34	1
66–6680	Assembly – Seat	7	1	1
66–6740	Cover – Shaft, Steering	4	2	1
66–6910	Insert – Wheel, Steering	4	4	1
68–3650	Decal – Warning, Deflector	15	9	1
68–3650	Decal – Warning, Deflector	14	13	1
76–1090	Decal – Instructions	4	23	1
76–1210	Decal – L.H. (Model 70042)	5	10	1
76–1230	Decal – L.H. (Model 70080)	5	10	1
76–1250	Decal – L.H. (Model 70120/40	5	10	1
76–1260	Decal – Ignition & Throttle	4	12	1
76–1270	Decal	1	3	1
76–1290	Decal – H.O.C. Top	4	20	1
76–1300	Decal – H.O.C. Bottom	4	21	1
76–1310	Decal – Engage, Top	4	9	1
76–1320	Decal – Disengage	4	25	1
76–1410	Assembly – Seat	8	1	1
76–1540	Arm – Suspension R.H.	13	16	1
76–1550	Arm – Suspension L.H.	13	*	1
76–1560	Spacer	13	13	2
76–1560	Spacer – Split	13	20	2
76–3930	Decal – Noise	8	10	1
79–0370	Decal – Danger	1	7	1
80–2310	Bracket – Bell Crank Mount	5	2	1
80–2320	Bracket – H.O.C., Engage.	5	15	1
80–2321	Bracket – H.O.C., Engage	5	15	1
80–2330	Link – Bell Crank	9	35	1
80–2340	Bracket – Pivot, Inner	9	6	1
80–2350	Pivot – Outer	9	4	1
80–2360	Crank – Bell, Deck Engage	5	22	1
80–2370	Shaft W.A. – Pivot	9	5	1
80–2400	Lever W.A. – Engage	9	2	1
80–2430	Axle – Front	2	18	1
80–2450	Rack – Steering	2	19	1
80–2460	Tie Rod – Fixed	2	*	1
80–2530	Assembly – Brake	14	50	1
80–2530	Assembly Brake	15	43	1
80–2550	Pad – Brake	14	6	1
80–2550	Pad – Brake	15	6	1
80–2560	Plate – Deck, Brake Mtg.	15	39	1
80–2560	Plate – Deck, Brake Mtg.	14	47	1
80–2570	Pin – Clevis	14	5	2
80–2570	Pin – Clevis	15	5	2
80–2580	Rod – Adjusting	15	45	1
80–2580	Rod – Adjusting	14	52	1
80–2600	Battery – 12 Volt	9	24	1
80–2620	Rod – Base, Seat	8	8	1
80–2620	Rod – Base, Seat	7	9	1
80–2630	Kicker – 32”	14	29	4
80–4350	Shaft – Spindle	15	33	1
80–4350	Shaft – Spindle	14	41	1
80–4370	Shield – Bearing	15	34	1
80–4370	Shield – Bearing	14	42	1
80–4390	Spacer – Hardened	15	35	1
80–4390	Spacer – Hardened	14	43	1
80–4430	Blade – Recycler	14	40	1
80–4470	Pulley	15	19	1
80–4470	Pulley	14	22	1
80–4490	Ring – Deck	14	48	4
80–4570	Stiffener – Blade	15	30	1
80–4570	Stiffener – Blade	14	37	1
82–6150	Assy. – Cover, Discharge	14	14	1
82–6270	Decal – Recycler	14	35	1
82–6280	Decal – Recycler	1	23	1
83–7010	Brace – Cover, Rear	14	17	1
83–7020	Spacer – Bearing	15	22	1
83–7020	Spacer – Bearing	14	25	1
88–4490	Reducer – Throttle	10	*	1
88–9730	Rim	12	12	2
88–9780	Ring – Deck	15	40	4
88–9800	Cover – Gate, Shift	6	24	1
88–9830	Switch – Ignition	4	10	1
88–9850	Wire Harness	11	1	1
88–9860	Wire Harness	11	1	1
88–9930	Switch – Micro, Short	6	4	1
88–9931	Switch – Micro	4	24	1
92–0860	Frame	6	14	1
92–0861	Frame – Rear	13	8	1
92–0862	Transaxle	12	8	1
92–0864	Standbar	13	5	1
92–0865	Support – Axle	13	9	2
92–0866	Body W.A. – Seat Support	6	8	1
92–0870	V–Belt – Traction	12	4	1
92–0871	Rod – Traction	10	29	1
92–0872	Rod – Brake	12	18	1
92–0873	Pulley – Engine	10	24	1
92–0874	Pulley	12	7	1
92–0875	V–Belt	15	21	1
92–0875	V–Belt	14	24	1
92–0876	Guard – Front	2	37	1
92–0877	Panel – Seat Base, R.H.	6	21	1
92–0878	Panel L.H. – Base, Seat	5	9	1
92–0879	Spring	10	1	1
92–0880	Arm – Shift, Transaxle	12	23	1
92–0881	Bracket W.A. – Traction	10	4	1
92–0883	Plate – Mounting, Idler	10	2	1
92–0884	Lever W.A. – Shaft	9	10	1
92–0887	Support – Shift, Lower	9	19	1
92–0888	Support – Shift, Upper	9	14	1
92–0889	Link – Shift	12	1	1
92–0890	Control – Throttle	4	15	1
92–0891	Shaft W. A. – Shift	9	16	1
92–0894	Spring – Torsion	9	11	1
92–0895	Gate – Shift	6	3	1
92–0896	Retainer – Spring	9	29	1
92–0897	Spacer	13	1	1
92–0898	Guide – Belt	13	2	1
92–0899	Guide – Belt, Lower	12	21	1
92–1751	Decal – Shift Pattern	6	2	1
217–80	Rim	2	3	2
218–461	Nut – Lock	4	7	1
218–560	Cap – Battery	9	28	6
231–116	Tire	2	42	2
231–117	Tire	12	10	2
232–27	Stem – Valve	12	16	2
232–39	Tube – Inner	12	11	2
232–44	Tube – Inner	2	†	2
233–25	Knob	4	13	1
233–48	Knob	9	1	2
233–48	Knob	5	19	1
237–27	Valve Stem w/Cap	2	41	2
237–143	O–Ring	9	27	2
2411–32	Ball Joint	9	31	1
2412–68	Clamp	4	17	2

*Not Illustrated

TORO PART NUMBER INDEX (Cont.)

Part No.	Description	Pg. No.	Ref. No.	Qty.
2412–68	Clamp – Wire	7	4	1
2412–68	Clamp – Wire	8	4	1
2412–98	Clamp – Hose	10	8	2
251–210	Bearing	2	2	4
251–297	Bearing	15	18	2
251–297	Bearing	14	21	2
257–11	Washer	9	18	1
283–2	Pin – Clevis	2	16	2
283–2	Pin – Clevis	15	37	2
283–2	Pin – Clevis	14	45	2
283–42	Pin – Clevis	13	18	2
283–52	Pin – Clevis	1	20	1
288–10	Cap – Pipe	10	22	1
289–19	Nipple – Pipe	10	23	1
302–5	Fitting – Grease	2	1	2
302–49	Fitting – Grease	2	17	2
321–4	Screw – Cap Hex. Hd.	14	8	1
321–4	Screw – Cap Hex. Hd.	3	10	1
321–4	Screw – Cap Hex. Hd.	5	11	4
321–4	Screw – Cap Hex. Hd.	9	12	2
321–4	Screw – Cap Hex. Hd.	6	13	2
321–4	Screw – Cap Hex. Hd.	1	21	2
322–3	Screw – Cap Hex. Hd.	7	6	4
322–5	Screw – Cap Hex. Hd.	3	2	1
322–5	Screw – Cap Hex. Hd.	13	6	15
322–5	Screw – Cap Hex. Hd.	6	6	2
322–5	Screw – Cap Hex. Hd.	3	7	2
322–5	Screw – Cap Hex. Hd.	15	8	14
322–5	Screw – Cap Hex. Hd.	9	8	4
322–5	Screw – Cap Hex. Hd.	14	9	12
322–5	Screw – Cap Hex. Hd.	2	9	8
322–5	Screw – Cap Hex. Hd.	5	12	2
322–5	Screw – Cap Hex. Hd.	1	14	10
322–5	Screw – Cap Hex. Hd.	4	16	8
322–6	Screw – Cap Hex. Hd.	14	20	1
322–7	Screw – Cap Hex. Hd.	10	28	1
322–12	Screw – Cap Hex. Hd.	13	10	4
322–14	Screw – Cap Hex. Hd.	13	11	2
322–50	Screw – Cap Hex. Hd.	13	4	1
323–9	Screw – Cap Hex. Hd.	10	32	1
323–9	Screw – Cap Hex Hd.	13	21	2
323–14	Screw – Cap Hex. Hd.	13	17	2
325–6	Screw – Cap Hex. Hd.	2	8	1
329–4	Screw – Cap Hex. Hd.	12	3	1
3218–1	Nut – Jam	6	18	2
3219–7	Nut – Hex. Hd.	15	20	4
3219–7	Nut – Hex. Hd.	14	23	1
3220–2	Nut – Hex. Jam	2	7	1
3230–18	Bolt – Carriage	2	32	2
3253–3	Washer – Lock	12	2	1
3253–3	Washer – Lock	6	16	4
3253–3	Washer – Lock	10	18	2
3253–6	Washer – Lock	10	26	1
3254–2	Washer – Lock, Int. Tooth	10	5	4
3254–2	Washer – Lock, Int. Tooth	12	20	1
3254–5	Washer – Lock, Int. Tooth	4	8	1
3256–14	Washer – Flat	6	9	1
3256–22	Washer – Flat	9	13	2
3256–22	Washer – Flat	1	18	2
3256–22	Washer – Flat	10	30	1
3256–23	Washer – Flat	7	5	4
3256–23	Washer – Flat	13	7	12
3256–23	Washer – Flat	6	7	2
3256–23	Washer – Flat	1	13	8
3256–23	Washer – Flat	15	14	8
3256–23	Washer – Flat	5	17	4
3256–23	Washer – Flat	4	18	7
3256–23	Washer – Flat	2	23	6
3256–23	Washer – Flat	14	27	4
3256–23	Washer – Flat	9	33	2
3256–24	Washer – Flat	1	11	1
3256–24	Washer – Flat	10	33	1
3256–24	Washer – Flat	13	15	4
3256–25	Washer – Flat	10	25	1
3256–26	Washer – Flat	5	25	1
3256–27	Washer – Flat	3	13	3
3256–35	Washer – Flat	1	1	4
3256–49	Washer – Flat	14	56	1
3256–57	Washer – Flat	10	36	1
3257–23	Key	12	6	1
3272–6	Pin – Cotter	3	1	3
3272–6	Pin – Cotter	5	4	2
3272–6	Pin – Cotter	1	12	1
3272–6	Pin – Cotter	2	14	2
3272–6	Pin – Cotter	12	22	1
3272–6	Pin – Cotter	15	29	4
3272–6	Pin – Cotter	10	31	1
3272–6	Pin – Cotter	14	36	4
3272–12	Pin – Cotter	2	45	2
3272–16	Pin – Cotter	12	9	1
3274–51	Screw – Hex. Socket Hd.	10	19	2
3290–134	Screw – Machine	6	10	1
3290–191	Nut – Speed	6	23	2
3290–282	Rivet	14	53	2
3290–307	Pin – Cotter, Hair	8	9	1
3290–307	Pin – Cotter, Hair	7	10	1
3290–354	Nut – Double	6	20	1
3290–354	Nut – Double	4	22	1
3290–378	Tie – Cable	8	6	1
3290–378	Tie – Cable	7	7	1
3290–413	Washer – Belleville	5	7	8
3290–496	Nut – Retainer	15	24	4
3290–496	Nut – Retainer	14	28	4
3295–43	Rivet	14	7	2
3295–43	Rivet	15	7	2
3296–2	Nut – Lock	6	19	1
3296–4	Nut – Lock	9	30	1
3296–4	Nut – Lock	2	36	4
3296–8	Nut – Lock	2	12	1
3296–8	Nut – Lock	5	23	1
3296–8	Nut – Lock	9	36	1
3296–8	Nut – Lock	15	38	1
3296–8	Nut – Lock	14	46	1
3296–29	Nut – Lock	5	1	7
3296–29	Nut – Lock	1	2	14
3296–29	Nut – Lock	13	3	17
3296–29	Nut – Lock	3	4	3
3296–29	Nut – Lock	6	5	2
3296–29	Nut – Lock	10	6	2
3296–29	Nut – Lock	2	10	8
3296–29	Nut – Lock	15	15	10
3296–29	Nut – Lock	12	19	1
3296–29	Nut – Lock	14	19	24
3296–29	Nut – Lock	4	19	4
3296–29	Nut – Lock	9	32	4
3296–39	Nut – Lock	10	3	1

*Not Illustrated

TORO PART NUMBER INDEX (Cont.)

Part No.	Description	Pg. No.	Ref. No.	Qty.
3296–39	Nut – Lock	13	19	1
3296–39	Nut – Lock	15	25	2
3296–39	Nut – Lock	14	31	2
3296–42	Nut – Lock	6	15	2
3296–42	Nut – Lock	9	15	2
3296–42	Nut – Lock	1	17	2
3296–42	Nut – Lock	5	18	1
3296–47	Nut – Lock	13	12	1
3296–59	Nut – Lock	13	14	3
3296–59	Nut – Lock	14	15	1
3296–59	Nut – Lock	15	16	1
32103–2	Nut – Wing	14	18	1
32103–12	Nut – Wing	9	20	1
32103–22	Nut – Wing	9	23	2
32104–76	Screw – Self Tap Acorn Hd.	1	5	9
32104–76	Screw – Self–Tapping	4	14	2
32107–11	Nut – Square	10	17	2
32120–47	Ring – Retaining	9	7	1
32120–64	Ring – Retaining	12	5	1
32121–9	Pin – Roll	2	28	1
32121–16	Pin – Roll	9	17	1
32121–25	Pin – Roll	9	3	1
32121–78	Pin – Roll	4	3	1
32121–78	Pin – Roll	9	9	1
32122–14	Screw – Truss, Phillips Hd.	14	38	8
32122–14	Screw – Truss, Phillips Hd.	15	42	8
32128–20	Nut – Flange Hd.	8	5	4
32128–21	Nut – Lock, Flange Hd.	2	25	1
32128–23	Nut – Lock, Flange Hd.	2	26	1
32140–99	Screw – Sems	6	22	2
32144–4	Screw – Special	2	21	2
32144–14	Screw	10	12	2
32144–14	Screw – Thread Forming	2	38	2
32151–48	Ring – Retaining	12	13	2
32151–48	Ring – Retaining, External	2	35	2
32151–61	Ring – Retaining	5	14	2

*Not Illustrated

MAINTENANCE RECORD

Date								

MAINTENANCE RECORD

Date								

PRODUCT CHANGES

In an effort to make improvements available to TORO owners as quickly as possible, minor changes are incorporated into Toro's products from time to time that do not become immediately shown in the Parts Catalog. If such a change has been made in your unit, which is not reflected in your manual, see your TORO Distributor or his Authorized TORO Service Dealer for information and part numbers.

IDENTIFICATION AND ORDERING

MODEL AND SERIAL NUMBERS

The Riding Mower has two identification numbers; a model number and a serial number. The two numbers are stamped on a plate which is located on the left hand side of the frame near the engine.. In any correspondence concerning the Riding Mower, supply model and serial numbers to assure that correct information and replacement parts are obtained.

To order replacement parts from an Authorized TORO Service Dealer, supply the following information:

1. Model and serial number of the Riding Mower.
2. Part number, description, and the quantity of part(s) desired.

NOTE: Do not order by reference number if a parts catalog is being used; use the PART NUMBER.

TABLE OF CONTENTS

Description	Page	Description	Page
Front Tower Assembly	1	Rear Axle Assembly	12
Front Axle Assembly	2	Stand Bar Assembly	13
Brake & Clutch Assembly	3	Mower Assembly – Recycler	14
Steering Wheel, Switches & Decals	4	Mower Assembly – Used on Model No. 70140	15
Linkage Assembly	5	10 H.P Engine (257707–0124–01	16–19
Seat Body & Side Panel Assembly	6	12 H.P. Engine (286707–0119–01	20–26
Seat Assembly (Model No. 70042)	7	Starter Assembly (All Models)	27
Seat Assembly (Models No. 70080, 70120 & 71040	8	8 H.P. Engine (191707–0121–01)	28–31
Transmission Linkage Assembly	9	Transaxle Assembly	32–33
Engine Assembly	10	Numerical Parts List	34–37
Electrical Schematics	11		

OPTIONAL EQUIPMENT

Description	Model / Part No.	Description	Model / Part No.
Easy Empty Bagging Kit	79095	Hi–Sail Bagging Blade	33–4750
Twin Bag Bagging Kit	79085	Wet Grass Bagging Kit	38–5730
Recycler Kit (For Model No.70140)	59167	Tire Chains	23–2340