FORM NO. 3315–831

TORO

MODEL NO. 38555–3900001 & UP

PARTS CATALOG

1028 SNOWTHROWER

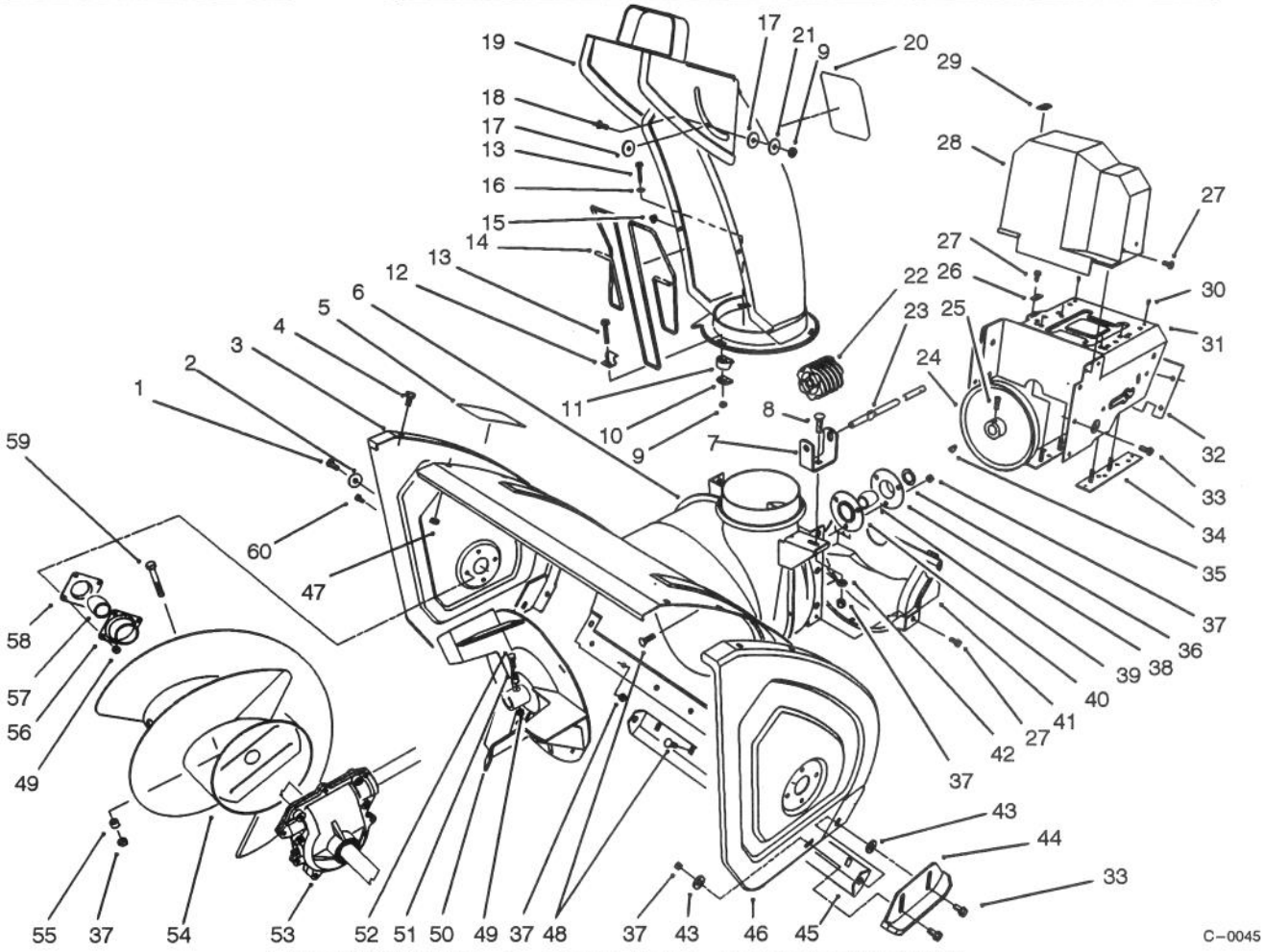

HOUSING & CHUTE ASSEMBLY

Ref. No.	Part No.	Description	No. Used
1	323–6	Screw – Hex Hd.	2
2	3–0750	Washer – Retaining	2
3	66–7821	Plate – Side R.H.	1
4	3234–28	Screw – Hex Flange Hd.	12
5	53–7670	Decal – Danger Auger	1
6	62–0721	Housing – 28"	1
7	63–2180	Bracket – Gear	1
8	3230–2	Bolt – Carriage	1
9	3296–2	Nut – Lock	4
10	63–2670	Plate – Chute Retainer	3
11	62–1430	Retainer – Chute	3
12	63–3130	Clip – Chute Guard	1
13	3274–13	Screw – Machine	3
14	63–3020	Guard – Chute	1
15	3290–326	Nut – Push	2
16	3256–14	Washer – Flat	3

Ref. No.	Part No.	Description	No. Used
17	63–2900	Washer – Plastic	2
18	32122–32	Screw	1
19	62–0840	Chute Assembly	1
20	53–7660	Decal – Danger Chute	1
21	3256–61	Washer – Flat	1
22	62–0820	Gear – Worm	1
23	62–1720	Rod – Chute Gear	1
24	62–1300	Pulley – Impeller	1
25	3242–4	Screw – Set Sq. Hd.	2
26	63–2300	Retainer – Cable	1
27	32144–4	Screw – Hex Flange Hd.	6
28	63–2080	Cover – Belt (Upper)	1
29	63–3290	Cover – Cable	1
30	3269–23	Rivet	4
31	66–6980	Frame – Engine	1
32	62–1440	Cover – Engine Frame	1

© The TORO Company –1992

TPS

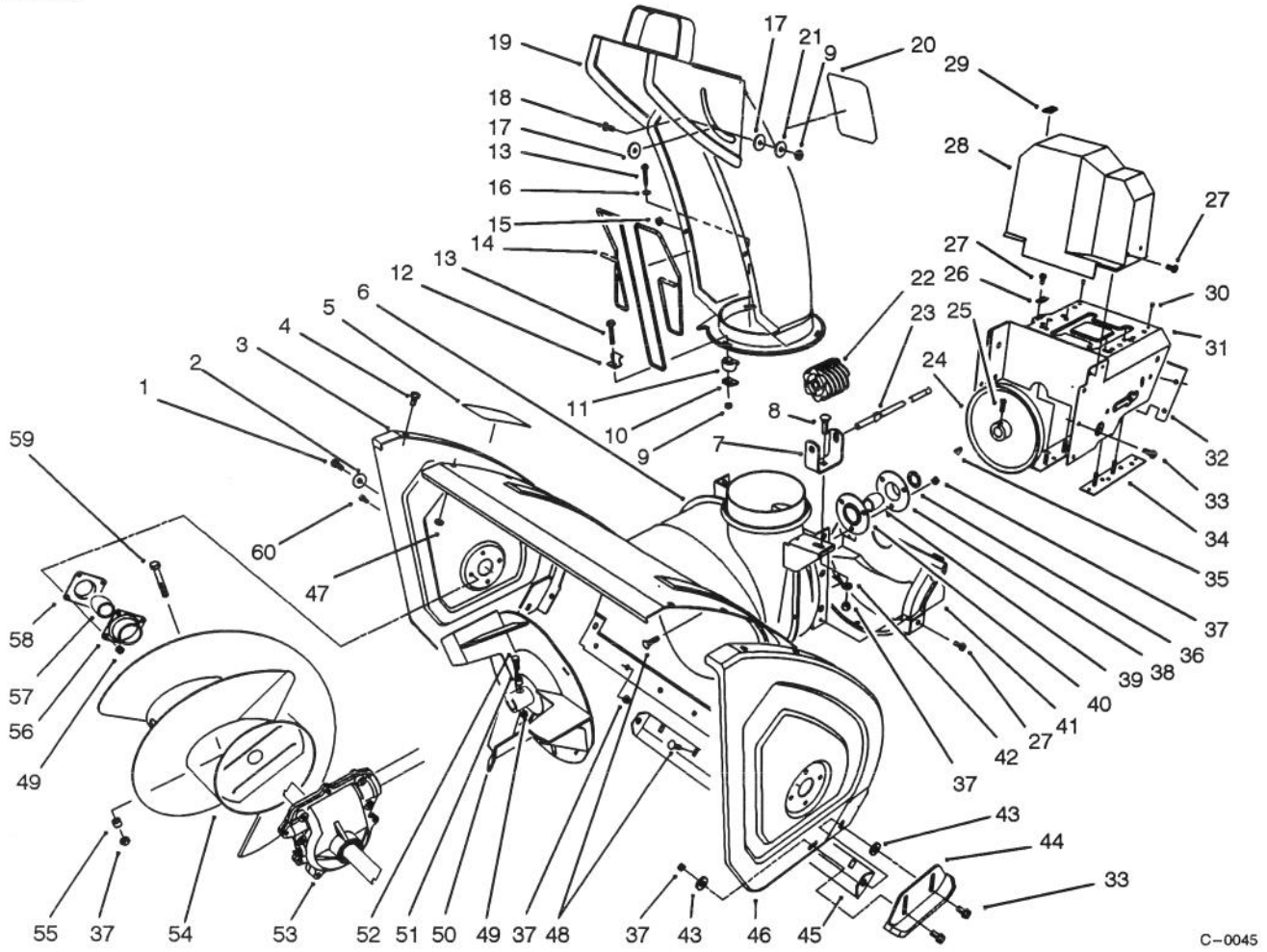

HOUSING ASSEMBLY (Continued)

Ref. No.	Part No.	Description	No. Used
33	3234-5	Screw – Hex. Washer Hd.	10
34	68-4110	Plate – Engine Stud L.H.	1
*	68-4100	Plate – Engine Stud R.H.	1
35	3257-23	Key – Woodruff	1
36	252-80	Washer – Thrust	1
37	3296-29	Nut – Lock	12
38		Flange – Bearing (Rear)	1
39	63-3450	Bearing – Impeller	1
40		Flange – Bearing (Front)	1
41	68-8410	Cover – Belt (Lower)	1
42	3256-23	Washer – Flat	1
43	52-2861	Washer	4
44	74-1440	Skid Assembly	2
45	66-7761	Blade – Scraper	1
46	66-7831	Plate – Side L.H.	1
47	3296-47	Nut – Lock	12
48	3230-23	Screw – Carriage	10

Ref. No.	Part No.	Description	No. Used
49	3296-42	Nut – Lock	10
50	66-7920	Impeller	1
51	66-8010	Spacer	2
52	321-44	Screw – Hex. Hd.	2
53	74-1561	Auger Gearbox Assembly	1
54	68-7451	Auger – R.H.	1
*	68-7461	Auger – L.H.	1
55	25-5090	Spacer – Auger Hub	2
56	20-0990	Flange – Bearing (Inner)	2
57	20-0980	Bearing – Auger	2
58	20-1000	Flange – Bearing (Outer)	2
59	17-7030	Bolt – Auger	2
60	321-3	Screw – Hex Hd.	8
*	12-8789	Impeller Bearing Assembly (Incl. Ref. #38-40)	1
*	12-8949	Loose Parts	1

*Not Illustrated

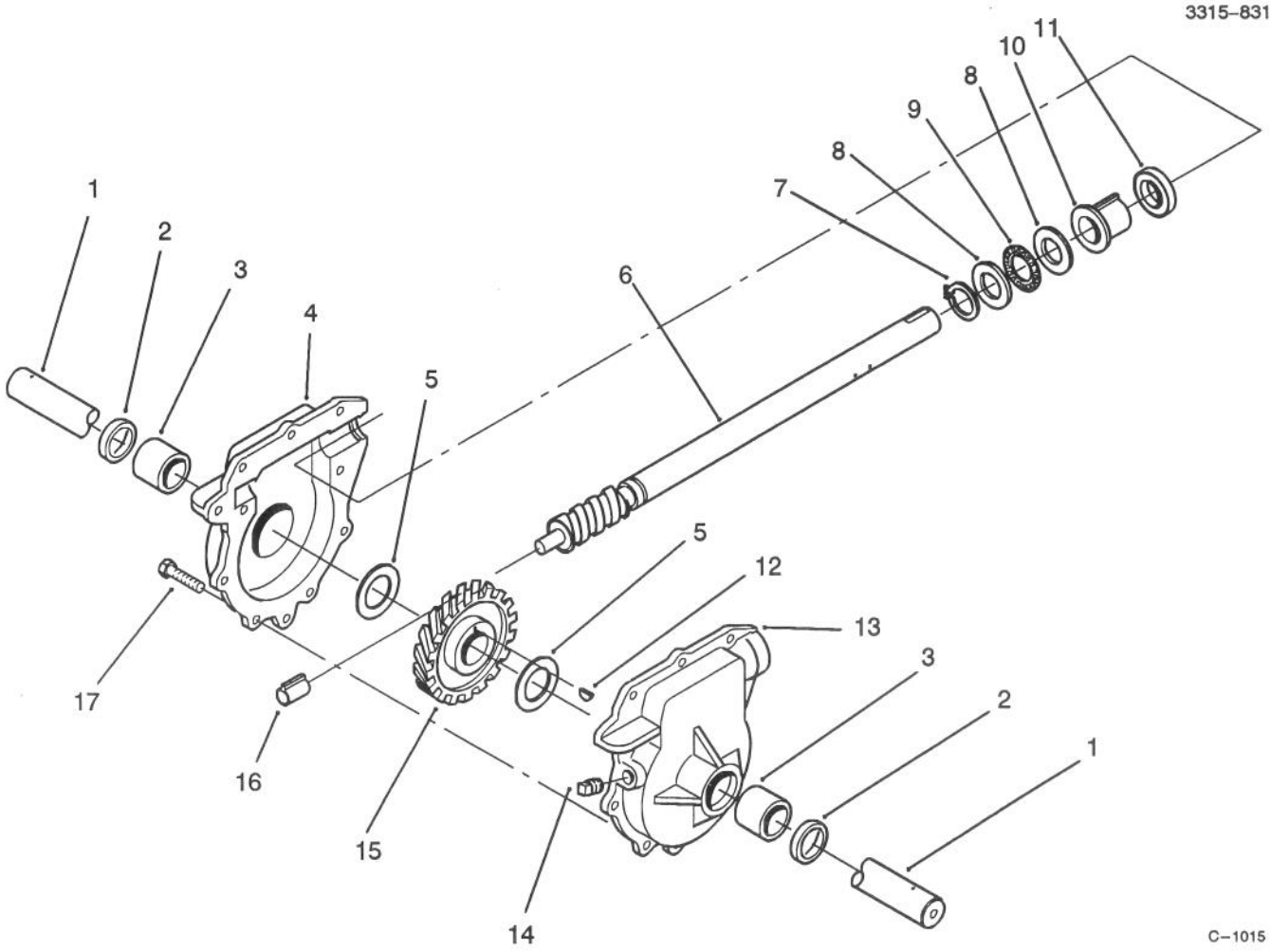

28" AUGER GEARCASE ASSEMBLY NO. 74–1561

Ref. No.	Part No.	Description	No. Used
1	62–1531	Shaft – Auger (28")	1
2	7–0045	Seal – Oil	2
3	256–237	Bushing – Sleeve	2
4	74–1580	Gearcase Assembly – R.H. (Incl. Ref. # 2–3)	1
5	252–71	Bearing – Thrust	2
6	66–7811	Shaft – Impeller	1
7	32151–33	Ring – Snap	1
8	252–78	Washer – Thrust	2
9	252–76	Bearing – Thrust	1

Ref. No.	Part No.	Description	No. Used
10	37–6560	Bushing – Input	1
11	253–149	Seal – Input	1
12	3257–10	Key – Woodruff	1
13	74–1570	Gearcase Assembly – L.H. (Incl. Ref. # 2–3)	1
14	281–1	Plug – Pipe Sq. Hd.	1
15	62–0120	Gear – Helical	1
16	62–1150	Bushing – Worm	1
17	32144–110	Screw – Hex Washer Hd.	9
*	505–129	Sealant – 100g Tube	1

*Not Illustrated

3315-831

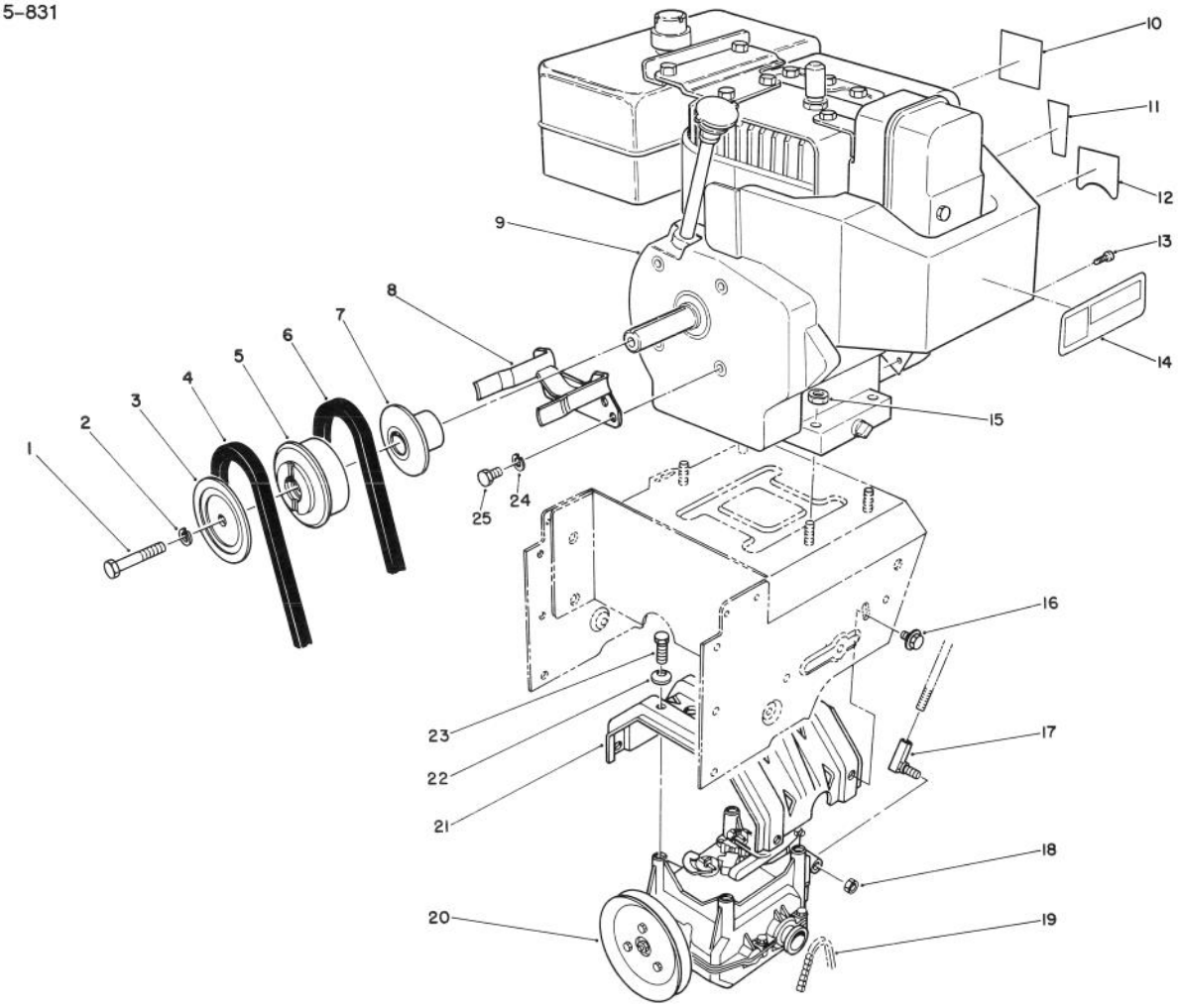

ENGINE ASSEMBLY

Ref. No.	Part No.	Description	No. Used
1	3212-8	Screw – Hex. Hd.	1
2	3253-6	Washer – Lock	1
3	62-0940	Sheave Half – Impeller	1
4	63-2962	Belt – Impeller	1
5	62-0930	Hub – Sheave	1
6	63-2951	Belt – Traction	1
7	62-0920	Sheave Half – Traction	1
8	68-7510	Guide – Belt	1
†9		Engine – Tecumseh Model HMSK100-159227S	1
10	62-5760	Decal – Primer	1
11	63-3190	Decal – Throttle	1
12	63-2410	Decal – Choke	1

Ref. No.	Part No.	Description	No. Used
13	32144-4	Screw	1
14	63-2310	Decal – Hot Surface	1
15	32128-20	Nut – Lock	4
16	3234-7	Screw – Hex Flange Hd.	4
17	63-2640	Joint– Ball	1
18	3296-39	Nut – Lock	1
19	63-2930	Chain – Drive	1
20	66-8030	Transmission Assembly	1
21	63-2990	Frame – Transmission	1
22	3290-461	Washer – Belleville	4
23	11-0590	Screw – Hex Hd.	4
24	3253-4	Washer – Lock	2
25	3210-1	Screw – Hex Hd.	2

†Obtain from your local Tecumseh Dealer.

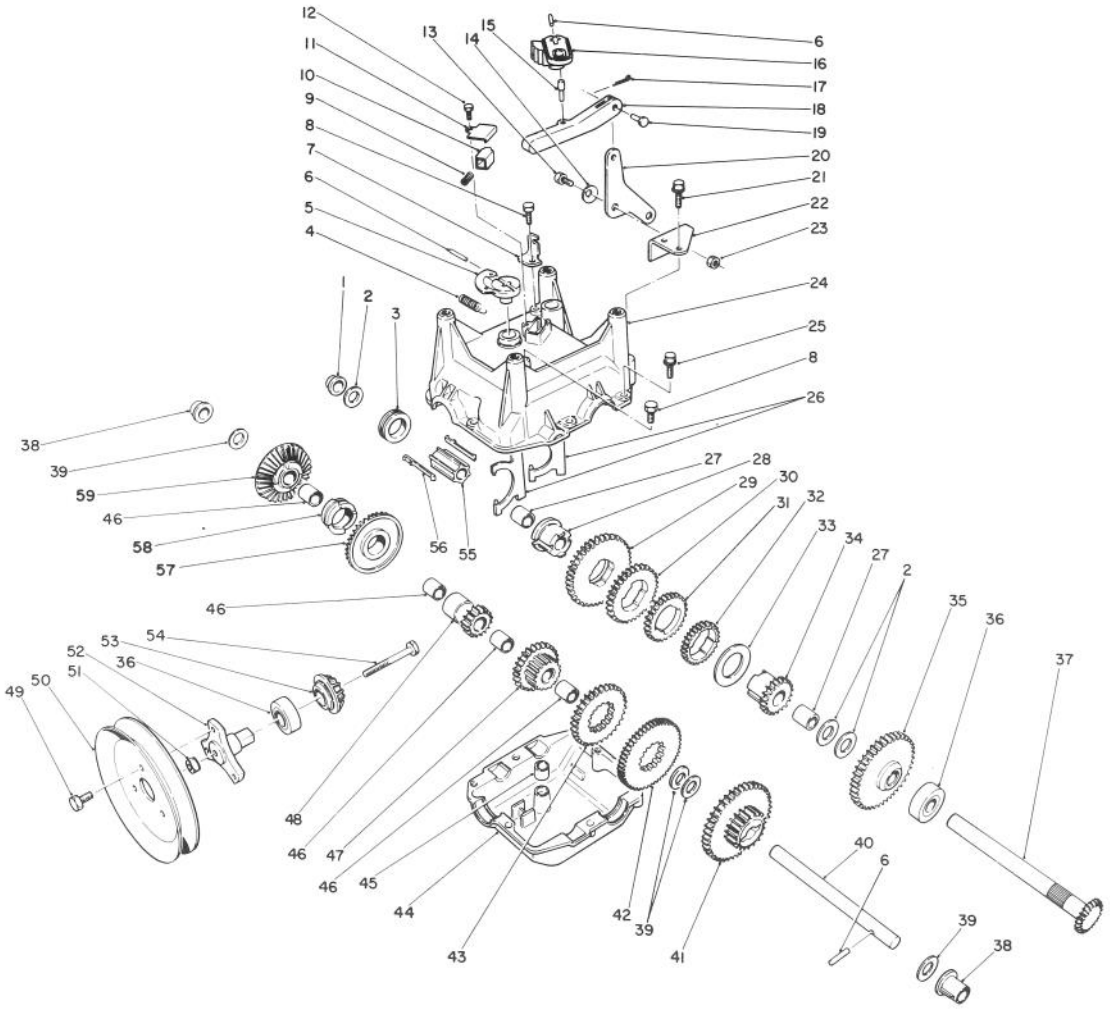

TRANSMISSION ASSEMBLY NO. 66-8030

Ref. No.	Part No.	Description	No. Used
1	62-1180	Bushing - Output (Flange)	1
2	252-59	Washer - Thrust	3
3	62-0430	Collar - Shift (Speed)	1
4	63-2920	Spring - Extension (F/R Return)	1
5	62-0880	Lever - Direction Shift	1
6	32121-106	Pin - Coil	3
7	62-1740	Bracket - Cable	1
8	32144-4	Screw - Self Tapping	2
9	63-2890	Spring - Compression (Detent)	1
10	62-1020	Button - Detent	1
11	62-1690	Cover - Detent	1
12	32104-71	Screw - Pan Hd.	1
13	63-3410	Bolt - Shoulder	1
14	3290-477	Washer - Curved	1
15	63-2190	Pin - Gearshift Link	1
16	62-0870	Lever - Gear Shift	1
17	3272-1	Pin - Cotter	1
18	62-0860	Link - Gearshift	1
19	283-3	Pin - Clevis	1
20	63-2600	Bellcrank	1
21	32104-95	Screw - Hex Washer Hd.	2

Ref. No.	Part No.	Description	No. Used
22	62-1190	Bracket - Bellcrank	1
23	3296-42	Nut - Lock	1
24	62-0490	Gear Case - Upper	1
25	32144-86	Screw - Hex Washer Hd.	6
26	62-1040	Yoke-Shift	2
27	62-1350	Bushing - Output	2
28	62-0320	Sleeve	1
29	62-0240	Gear - 45T	1
30	62-0220	Gear - 34T	1
31	62-0200	Gear - 27T	1
32	62-0250	Gear - 29T	1
33	63-2280	Washer - Thrust	1
34	62-0340	Sleeve - Gear 19T	1
35	62-0370	Gear - 41T	1
36	38-7820	Bearing - Ball	2
37	62-1080	Shaft - Output	1
38	62-1170	Bushing - Flange	2
39	257-10	Washer - Thrust	4
40	62-0330	Shaft - Intermediate	1
41	62-0360	Gear - Compound 19T/41T	1
42	62-0260	Gear - 51T	1
43	62-0210	Gear - 33T	1
44	62-0480	Gear Case - Lower	1

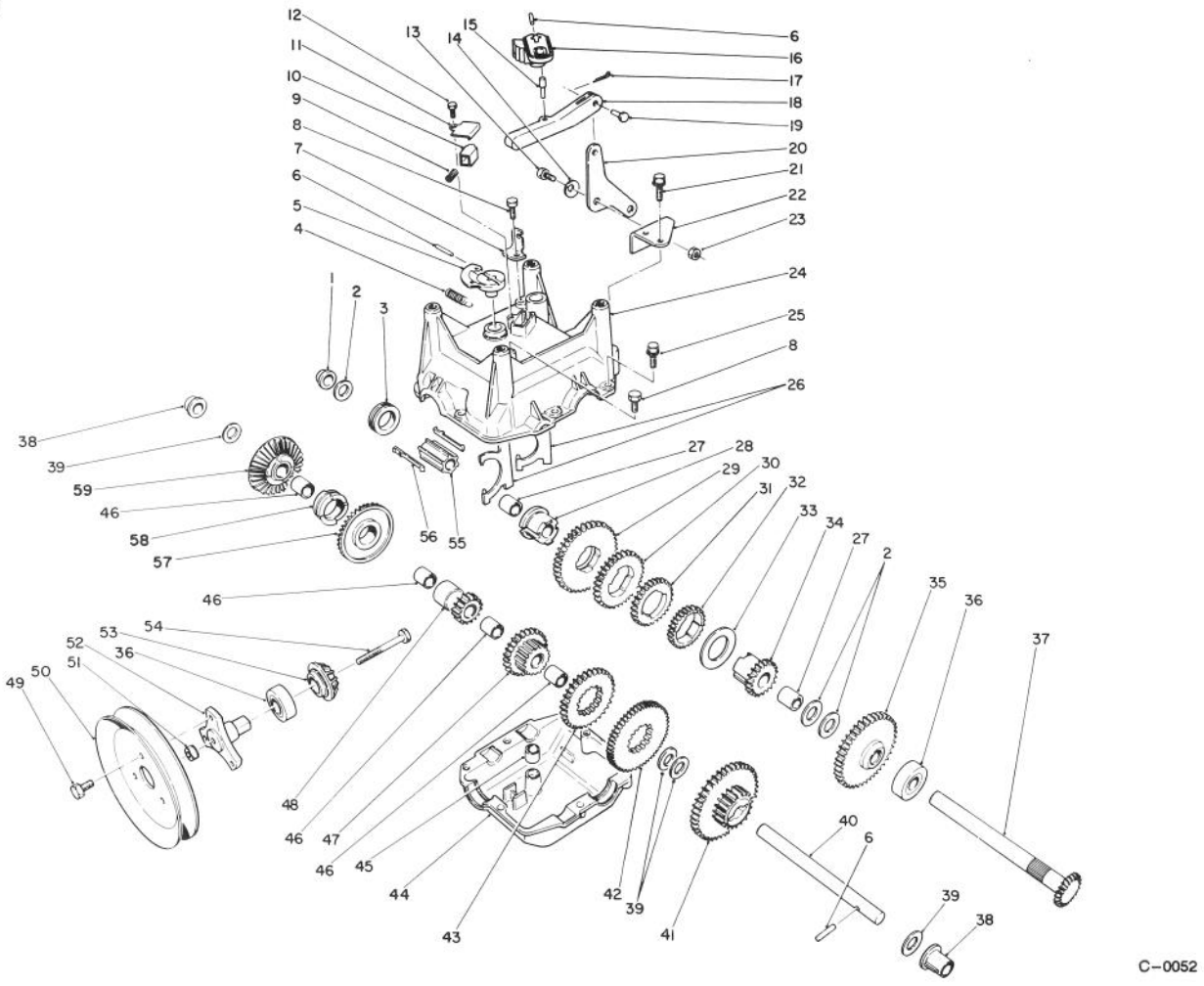

TRANSMISSION ASSEMBLY NO. 66-8030 (Continued)

Ref. No.	Part No.	Description	No. Used
45	29-9570	Bushing - Yoke	1
46	62-1160	Bushing - Intermediate	4
47	68-4310	Gear - 26T	1
48	62-0500	Gear - 15T	1
49	12-3270	Screw	3
50	62-1310	Pulley - Traction	1
51	32128-32	Nut - Flange Lock	1
52	62-0380	Hub - Pulley	1
53	62-0350	Pinion - Bevel 19T	1

Ref. No.	Part No.	Description	No. Used
54	321-15	Screw - Hex Hd.	1
55	68-4320	Sleeve - Shift	1
56	62-0310	Key - Shift	2
57	67-5870	Gear - Bevel 36T	1
58	67-5880	Collar - Shift	1
59	13-3559	Gear - Bevel Reverse 36T (Incl. Ref. #46)	1
*	505-101	Grease - 14.5 oz. Cartridge	1

*Not Illustrated

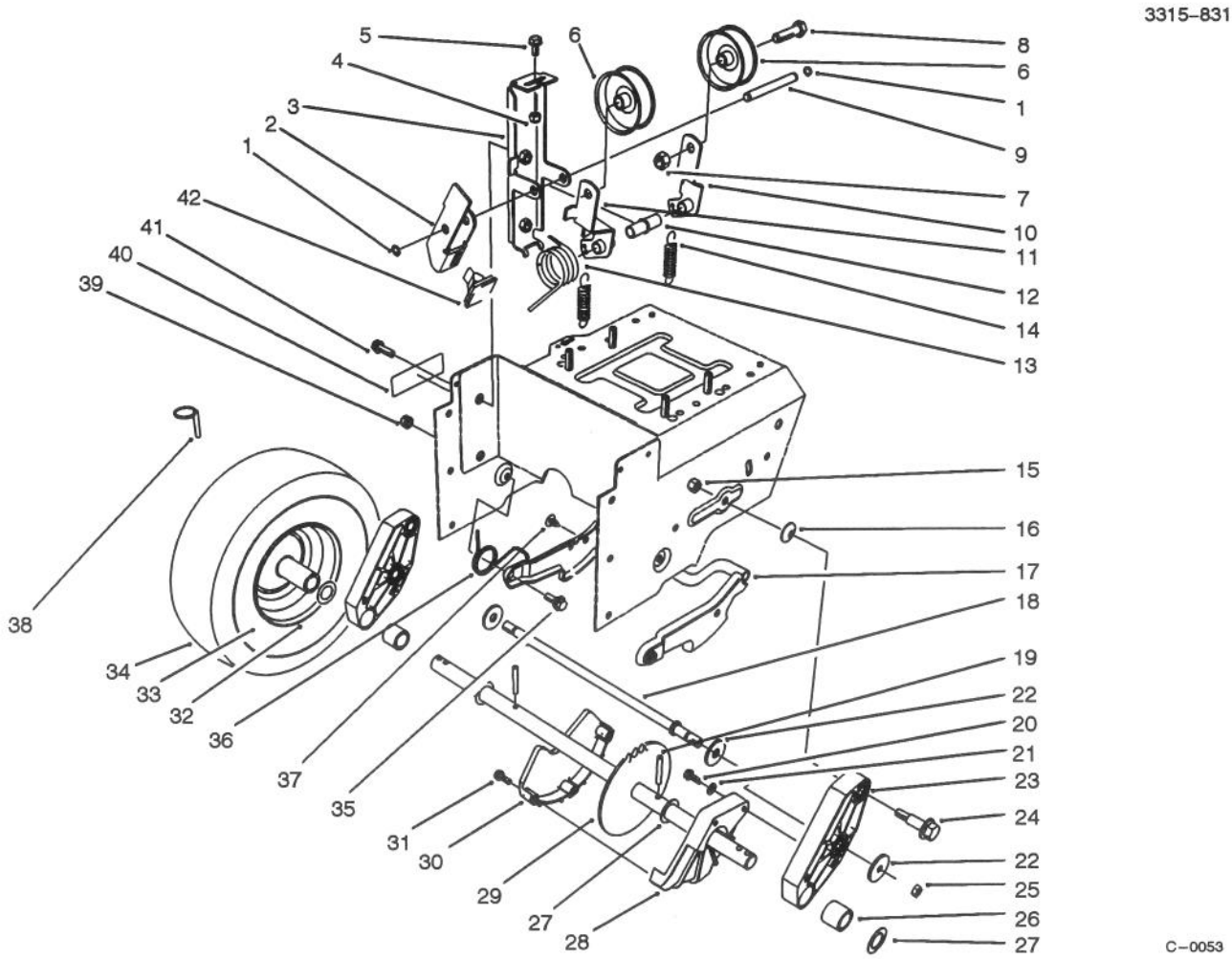

TRACTION DRIVE ASSEMBLY

Ref. No.	Part No.	Description	No. Used
1	32120–46	Ring – Retaining	2
2	63–2820	Arm – Brake	1
3	63–2850	Bracket – Idler Arm	1
4	3296–42	Nut – Lock	1
5	3234–13	Screw – Hex. Hd.	1
6	3–4244	Pulley – Idler	2
7	3296–59	Nut – Lock	2
8	323–7	Screw – Hex Hd.	2
9	62–0970	Pin – Idler	1
10	62–1260	Arm – Traction Idler	1
11	62–1280	Arm – Impeller Idler	1
12	62–1210	Bushing – Idler	1
13	63–2881	Spring – Torsion	1
14	63–2870	Spring – Extension	2
15	3296–39	Nut – Lock	2
16	3290–461	Washer – Belleville	2
17	62–0470	Latch – Arm	1
18	66–7720	Rod – Latch	1
19	32121–9	Pin – Roll	2
20	32144–4	Screw – Hex Flange Hd.	2
21	3256–1	Washer – Flat	2
22	63–3340	Washer	4
23	66–7740	Pivot Arm Assembly (Incl. Ref. # 26)	2

Ref. No.	Part No.	Description	No. Used
24	62–1330	Bolt – Shoulder	2
25	3296–23	Nut – Lock	2
26	63–2250	Bushing – Axle	2
27	252–80	Washer – Thrust	4
28	62–1010	Guard – Chain L.H.	1
29	63–2112	Axle Assembly	1
30	62–1000	Guard – Chain R.H.	1
31	32104–121	Screw – Hex Flange Hd.	3
32	241–127	Rim – Wheel	2
33	232–48	Tube – Inner	2
34	231–123	Tire	2
35	5–2490	Bolt – Shoulder	2
36	63–2740	Spring – Torsion	1
37	3290–476	Fastener – Panel	1
38	3290–243	Pin – Klik	2
39	3296–47	Nut – Lock	2
40	63–3470	Decal – Warning	1
41	3234–7	Screw – Hex Flange Hd.	2
42	66–8060	Pad – Brake	1
*	63–3040	Tire Chains Kit (Optional)	1
*	66–6820	Spacer – Tire Chain	2
*		Wheel & Tire Assembly (Incl.Ref.#32–34)	2
*	74–1190	Kit – Weight (Optional)	1

*Not Illustrated

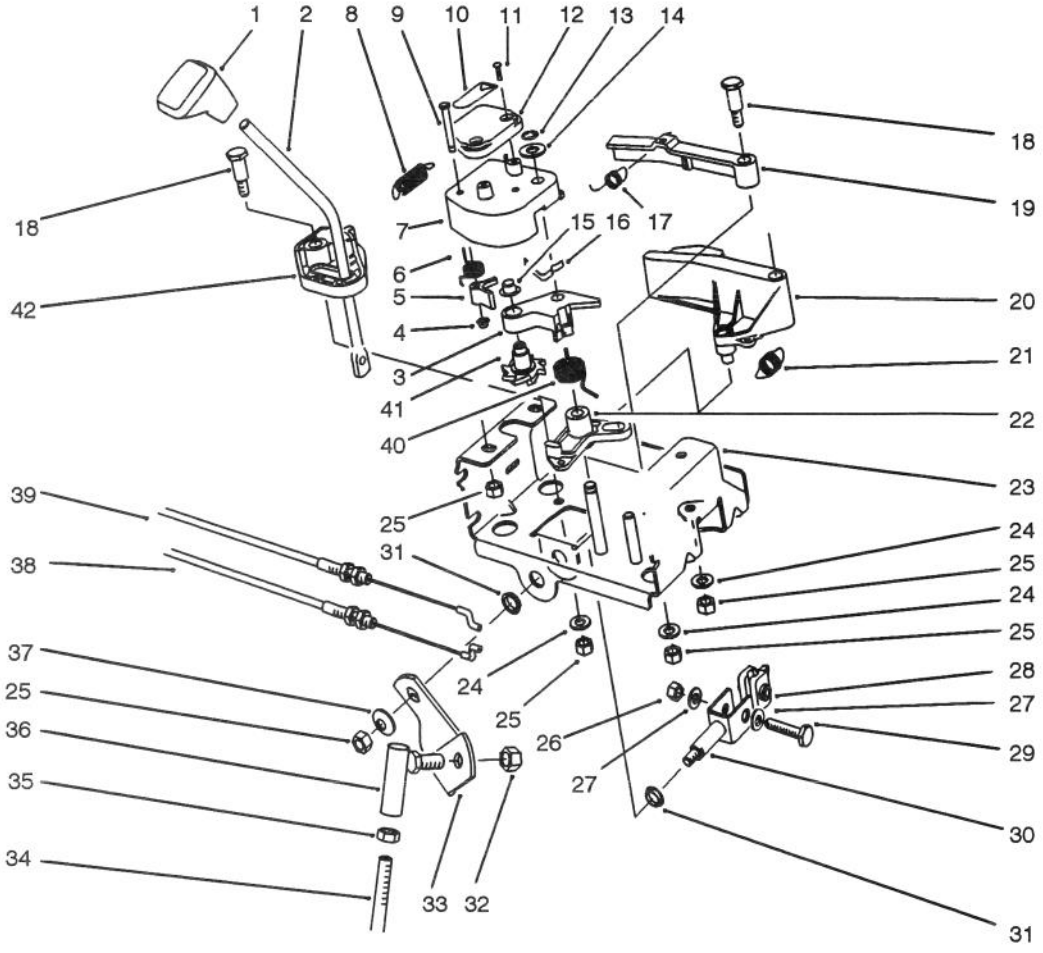

TRACTION LINKAGE ASSEMBLY

Ref. No.	Part No.	Description	No. Used
1	62-1290	Knob – Shift	1
2	67-9240	Rod – Shift (Upper)	1
3	62-1110	Lever – Index Wheel	1
4	3290-422	Nut – Push	1
5	62-0180	Tang – Index	1
6	62-1650	Spring – Torsion	1
7	62-1100	Lever – Latch	1
8	63-2220	Spring – Extension	1
9	63-2610	Pin – Tang	1
10	63-2480	Decal – #2	1
11	32104-118	Screw – Pan Hd.	2
12	62-1140	Cover – Latch	1
13	32120-46	Ring – Retaining	1
14	257-9	Washer – Thrust	1
15	3290-320	Nut – Push	1
16	62-1710	Spring – Flat	1
17	63-2240	Spring – Extension	1
18	63-2650	Screw – Shoulder	2
19	62-1700	Lever – Lockout	1
20	62-1130	Lever – Reverse	1
21	63-2230	Spring – Extension	1

Ref. No.	Part No.	Description	No. Used
22	62-1120	Lever – Reverse	1
23	63-2150	Frame – Control	1
24	3256-23	Washer – Flat	3
25	3296-29	Nut – Lock	7
26	3296-42	Nut – Lock	1
27	3256-1	Washer – Flat	2
28	67-9250	Retainer – Shift Rod	1
29	321-9	Screw – Cap Hex. Hd.	1
30	66-7730	Clevis	1
31	256-296	Bushing – Nyliner	2
32	3296-39	Nut – Lock	1
33	63-2630	Bracket – Shift	1
34	63-2830	Rod – Shift (Lower)	1
35	3220-3	Nut – Jam	2
36	63-2640	Joint – Ball	1
37	3290-456	Washer – Belleville	1
38	63-2210	Cable – Gearbox	1
39	63-2200	Cable – Latch	1
40	63-2270	Spring – Torsion	1
41	62-0170	Wheel – Index	1
42	62-1470	Base – Lockout	1

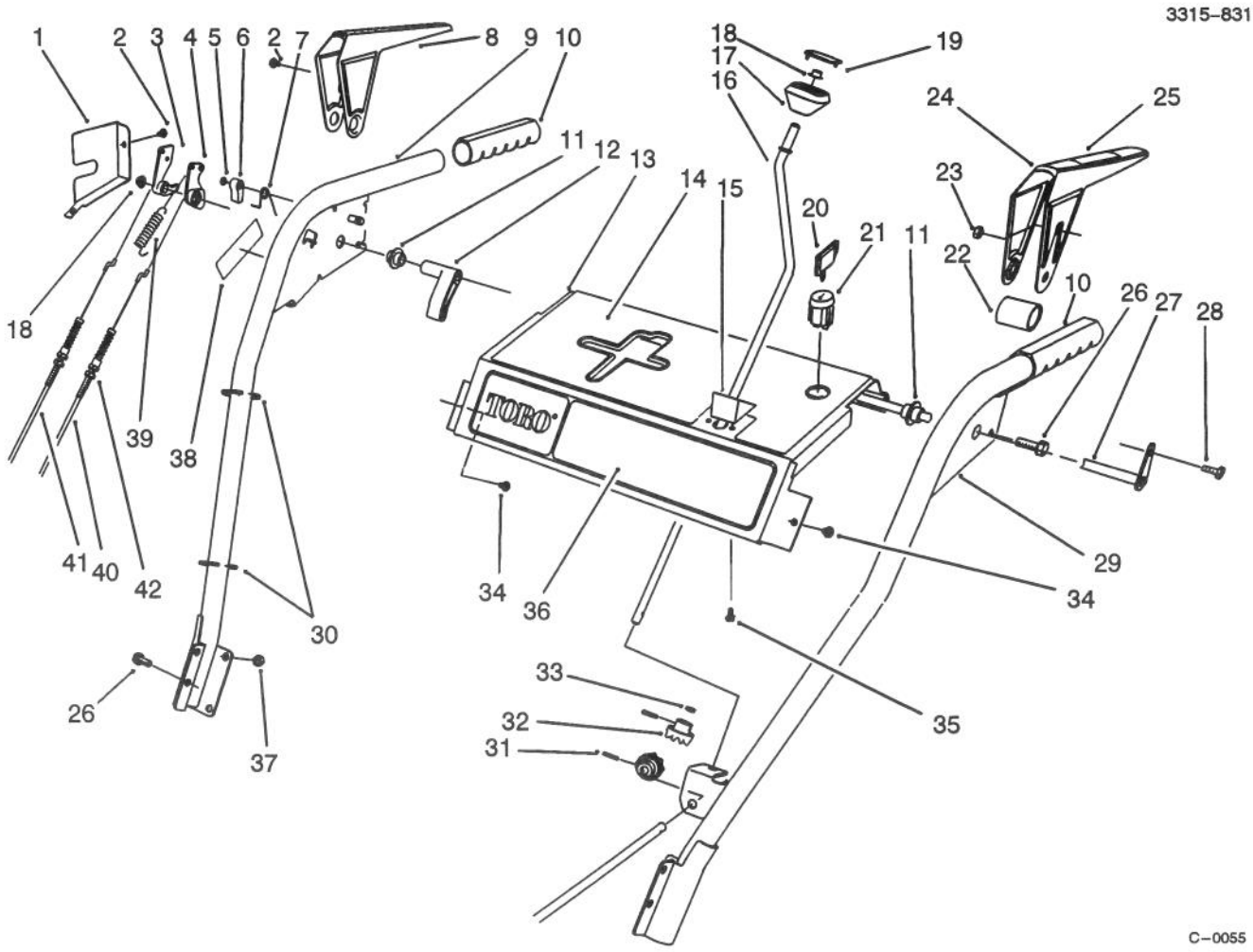

HANDLE ASSEMBLY

Ref. No.	Part No.	Description	No. Used
1	63–2170	Cover – Lever Lock	1
2	2210–250	Screw	3
3	62–0300	Tang – Locking	1
4	62–0290	Cam – Release	1
5	32151–66	Ring – Retaining	1
6	62–0280	Latch – Lock	1
7	63–2910	Spring – Torsion	1
8	62–1050	Lever – Impeller	1
9	62–1381	Handle – R.H.	1
10	66–7850	Handlegrip	2
11	62–1070	Bushing – Lever	2
12	62–1640	Lever – Trip	1
13	66–8100	Panel – Control	1
14	63–2550	Decal – Panel Top	1
15	62–1490	Plate – Guide	1
16	63–2160	Rod – Chute Crank	1
17	62–1320	Knob – Chute Control	1
18	3290–320	Nut – Push	3
19	62–1520	Cover – Knob	1
20	63–8360	Key – Switch	1
21	40–5940	Switch – On/Off	1
22	63–3380	Spacer – Traction Lever	1

Ref. No.	Part No.	Description	No. Used
23	3296–2	Nut – Lock	1
24	62–1060	Lever – Traction	1
25		Decal – Lever	1
26	3234–7	Screw – Hex Flange Hd.	6
27	63–2030	Rod – Cross	1
28	3290–359	Screw	1
29	66–8091	Handle – L.H.	1
30	3290–378	Tie – Cable	3
31	32121–50	Pin – Roll	2
32	62–1460	Gear – Universal	2
33	62–1230	Washer – Rubber	1
34	32104–76	Screw – Self Tapping	2
35	32104–118	Screw – Pan Hd.	2
36	88–0590	Decal – Panel Front	1
37	3296–47	Nut – Lock	4
38	63–3470	Decal – Warning	1
39	88–0810	Spring – Extension	1
40	63–2710	Cable – Traction	1
41	63–2700	Cable – Impeller	1
42	3296–42	Nut	4
*	63–3420	Harness – Wire	1

*Not Illustrated

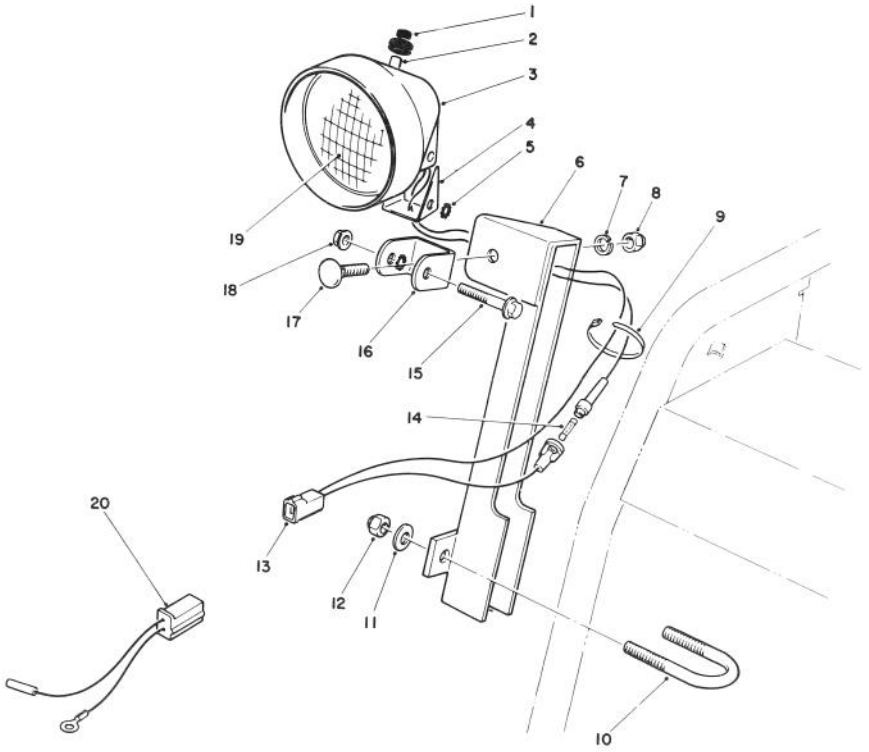

C-0071

LIGHT ASSEMBLY NO. 66-7940

Ref. No.	Part No.	Description	No. Used
1	218-473	Boot - Switch	1
2	218-553	Switch Assembly	1
3	218-552	Bucket - Headlamp	1
4	218-554	Bracket	1
5	3255-8	Washer - Lock	2
6	68-7110	Mount - Lamp	1
7	3253-21	Washer - Lock	1
8	3217-7	Nut - Hex.	1
9	3290-378	Tie Wrap	2
10	68-7140	Bolt - U	1
11	3256-23	Washer - Flat	2

Ref. No.	Part No.	Description	No. Used
12	3296-29	Nut - Lock	2
13	54-9810	Wire Assembly	1
†14		Fuse - 7-1/2 Amp.	1
15	322-13	Screw - Hex. Flange Hd.	1
16	218-556	Bracket - U	1
17	3231-2	Bolt - Carriage	1
18	32128-35	Nut - Flange Lock	1
19	218-16	Bulb - Sealed Beam	1
20	54-9810	Wire Assembly	1
*	54-9871	Headlamp Assembly (Incl. Ref. #1-5, 7-8 & 13-19)	1

*Not Illustrated
†Obtain Locally

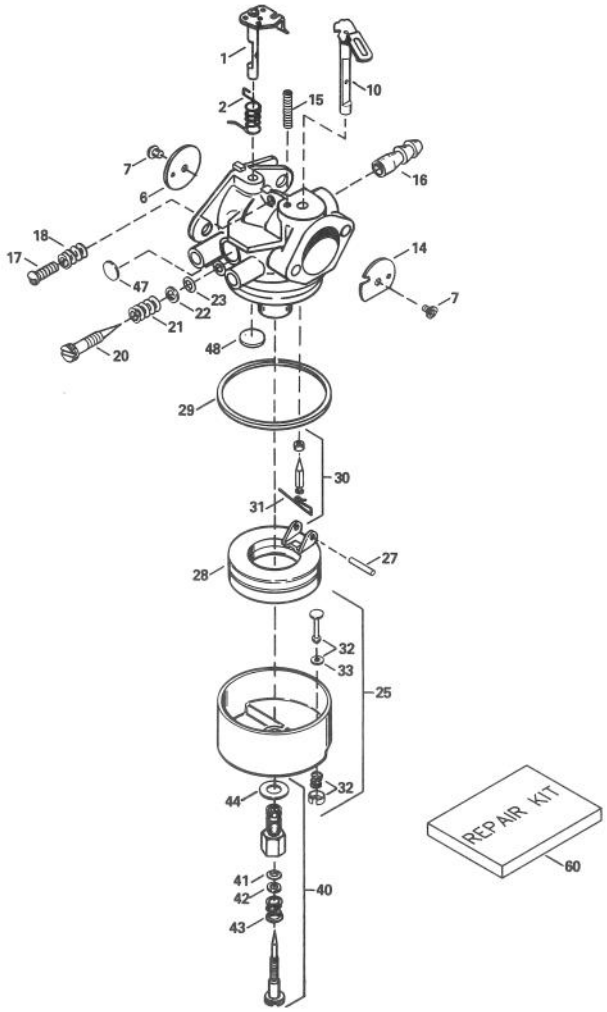

CARBURETOR NO. 632370A

Ref. No.	Part No.	Description	No. Used
1	631776A	Throttle Shaft & Lever Assy.	1
2	631970	Throttle Return Spring	1
6	631778	Throttle Shutter	1
7	650506	Screw – Throttle & Choke Shutter	4
10	632112	Choke Shaft & Lever Assy	1
14	632174	Choke Shutter	1
15	630735	Choke Positioning Spring	1
16	632164	Fitting – Fuel	1
17	650417	Screw – Idle Speed	1
18	630766	Spring – Tension	1
20	632281	Screw – Idle Mixture	1
21	630766	Spring – Idle Mixture Screw	1
22	630739	Washer – Idle Screw	1
23	*630740	O–Ring – Idle Screw	1
25	631951	Float Bowl (Incl. Ref.# 32 & 33)	1
27	*631024	Shaft – Float	1
28	632019	Float	1

Ref. No.	Part No.	Description	No. Used
29	*631028	O–Ring, Float Bowl to Body	1
30	*631021	Inlet Needle, Seat & Spring Clip (Incl Ref.# 31)	1
31	631022	Spring Clip	1
32	27136A	Bowl Drain Assy. (Incl Ref.# 33)	1
33	27554	Drain Plunger – Gasket	1
40	632239	High Speed Mixture Screw Assembly	1
41	*630740	O–Ring – High Speed Mixture Screw	1
42	630739	Washer, High Speed Mixture Screw	1
43	630738	Spring – Tension	1
44	*27110	Washer – Bowl Nut	1
47	*630748	Welch Plug – Idle Mixing	1
48	*631027	Welch Plug – Vent	1
60	632347	Repair Kit (Includes items marked *)	1

TECUMSEH ENGINE MODEL HMSK100-159227S

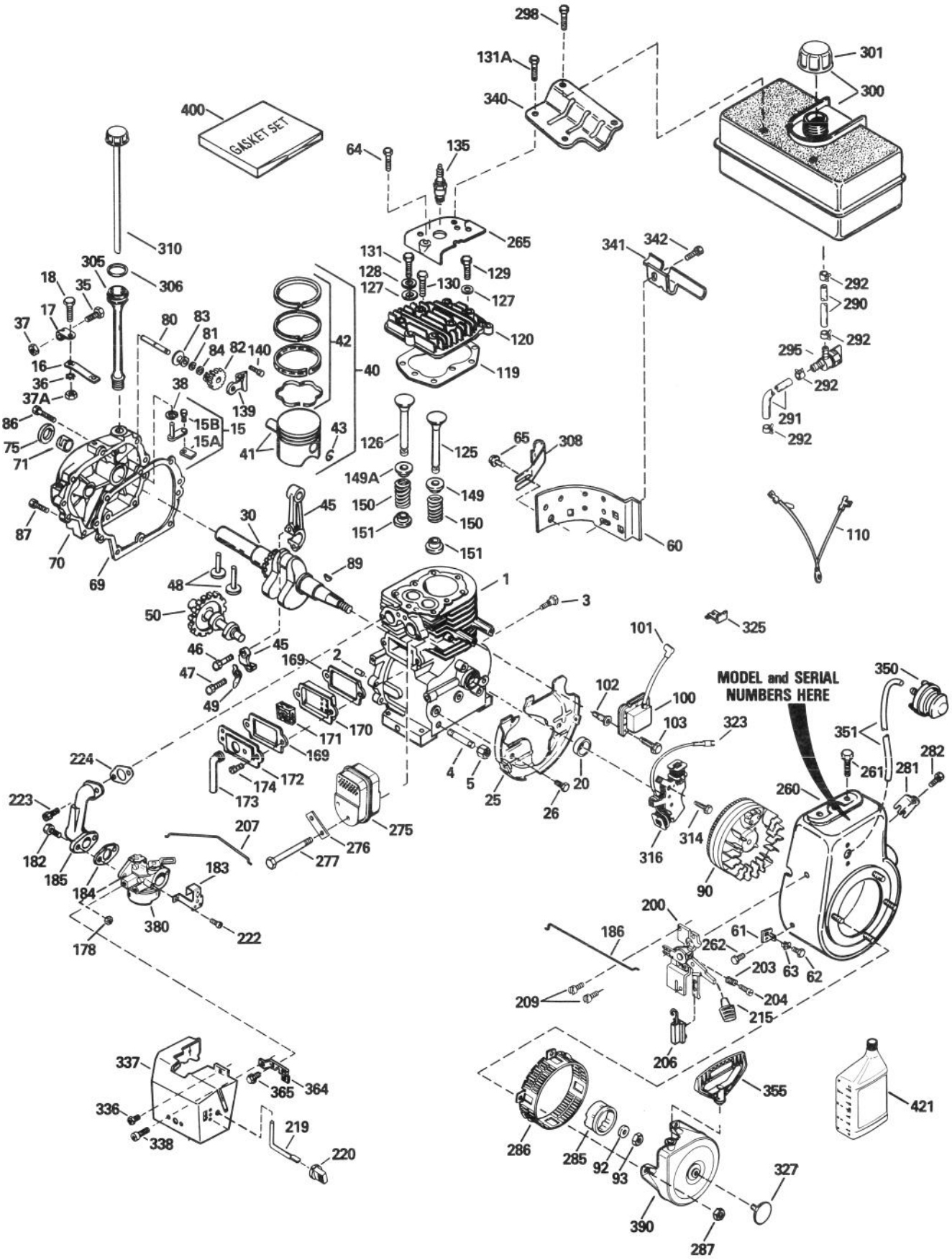

TECUMSEH ENGINE MODEL HMSK100-159227S

Ref. No.	Part No.	Description	No. Used
1	35371	Cylinder (Incl. ref.#2 & 20)	1
2	27652	Pin – Dowel	2
3	650820	Screw – Hex Hd. Shoulder	2
4	34171	Nipple – Pipe	1
5	30969	Cap – Oil Drain	1
15	30699C	Rod Assembly – Governor (Incl. ref.#15A & 15B)	1
15A	30700	Yoke – Governor	1
15B	650494	Screw – Fil. Hd. Sems	1
16	33454	Lever – Governor	1
17	29916	Clamp – Governor Lever	1
18	650548	Screw – Hex Washer Hd.	1
20	35319	Seal – Oil	1
25	35326	Baffle – Blower Housing	1
26	650561	Screw – Hex Washer Hd.	2
30	35571A	Crankshaft	1
35	29826	Screw – Hex Washer Hd.	1
36	29918	Washer – Ext. Tooth Lock	1
37	29216	Nut & Lockwasher – Keps	1
37A	30322	Locknut – Hex Keps	1
38	29642	Ring – Retaining	1
40	35776	Piston, Pin & Ring Assy. Std. (Includes ref.#41, 42 & 43)	1
	35777	Piston, Pin & Ring Assy. .010 oversize (Includes ref.#41, 42 & 43)	1
	35778	Piston, Pin & Ring Assy. .020 oversize (Includes ref.#41, 42 & 43)	1
41	35773	Piston & Pin Assembly Standard (Includes ref.#43)	1
	35774	Piston & Pin Assembly .010 oversize (Incl. ref.#43)	1
	35775	Piston & Pin Assembly .020 oversize (Incl. ref.#43)	1
42	35779	Ring Set, Piston (Standard)	1
	35780	Ring Set, Piston (.010 oversize)	1
	35781	Ring Set, Piston (.020 oversize)	1
43	35772	Retaining Ring, Piston Pin	2
45	35681	Rod Assembly – Connecting (Incl. ref.#46, 47 & 49)	1
46	650908	Bolt, Connecting Rod	1
47	650882	Bolt, Connecting Rod	1
48	34034	Lifter – Valve	2
49	35374	Dipper – Oil	1
50	35375	Camshaft (Mechanical Compression Release)	1
60	33273A	Extension – Blower Housing	1
61	34126	Bracket – Grommet Mounting	1
62	650760	Screw – Pan Hd. Taptite	1
63	28545	Grommet – Plastic	1
64	650802	Screw – Hex Washer Taptite	1
65	650128	Screw – Hex Head Sems	1
*69	35262	Gasket – Cylinder Cover	1
70	35376	Cover Assembly, Cylinder (Incl. ref.#71, 75 & 80)	1
71	35377	Bushing – Cylinder Cover	1
75	35319	Seal – Oil	1
80	31845	Shaft – Governor	1
81	30590A	Washer – Flat	1
82	35378	Gear – Governor (Incl. ref.#81)	1
83	30588A	Spool – Governor	1
84	29193	Ring – Retaining	1
86	650833	Screw, Hex Washer Powerlok	7
87	650832	Screw, Hex Washer Powerlok	1
89	32589	Key – Flywheel	1
90	611093	Flywheel (w/Ring Gear)	1
92	650880	Washer – Lock	1
93	650881	Nut – Flywheel	1
100	35135	Solid State Assembly	1
101	610118	Cover – Spark Plug	1
102	650872	Stud – Solid State Mounting	2
103	650814	Screw, Torx Hex Washer Sems	1
110	35253	Wire – Ground	1
*119	34923A	Gasket – Cylinder Head	1
120	34030A	Head – Cylinder	1
125	27878A	Valve – Exhaust, Standard (Incl. ref.# 151)	1
	27880A	Valve – Exhaust 1/32" oversize (Incl. ref.# 151)	1
126	34035	Valve – Intake, Standard (Incl. ref.# 151)	1
	34036	Valve – Intake 1/32" oversize (Incl. ref.# 151)	1
127	650691	Washer – Flat	5
128	650690	Washer – Belleville	3
129	650727	Screw – Special	2
130	6021A	Screw – Hex Flange Hd.	4
131	650694A	Screw – Hex Flange Hd.	3
131A	650713	Screw – Hex Hd.	2
135	35395	Spark Plug (RJ-19LM Resistor)	1
139	33369	Bracket – Governor Gear	1
140	650836	Screw – Hex Washer Hd.	2
149	27882	Cap – Upper Valve Spring	1
149A	35862	Seal Assy. – Intake Valve	1
150	27881	Spring – Valve	2
151	32581	Cap – Lower Valve Spring	2
*169	27896A	Gasket – Breather	2
170	28423	Body – Breather	1
171	28424	Element – Breather	1
172	28425	Cover – Breather	1

* Included in Gasket Set 33279G (Ref.# 400).

TECUMSEH ENGINE MODEL HMSK100-159227S

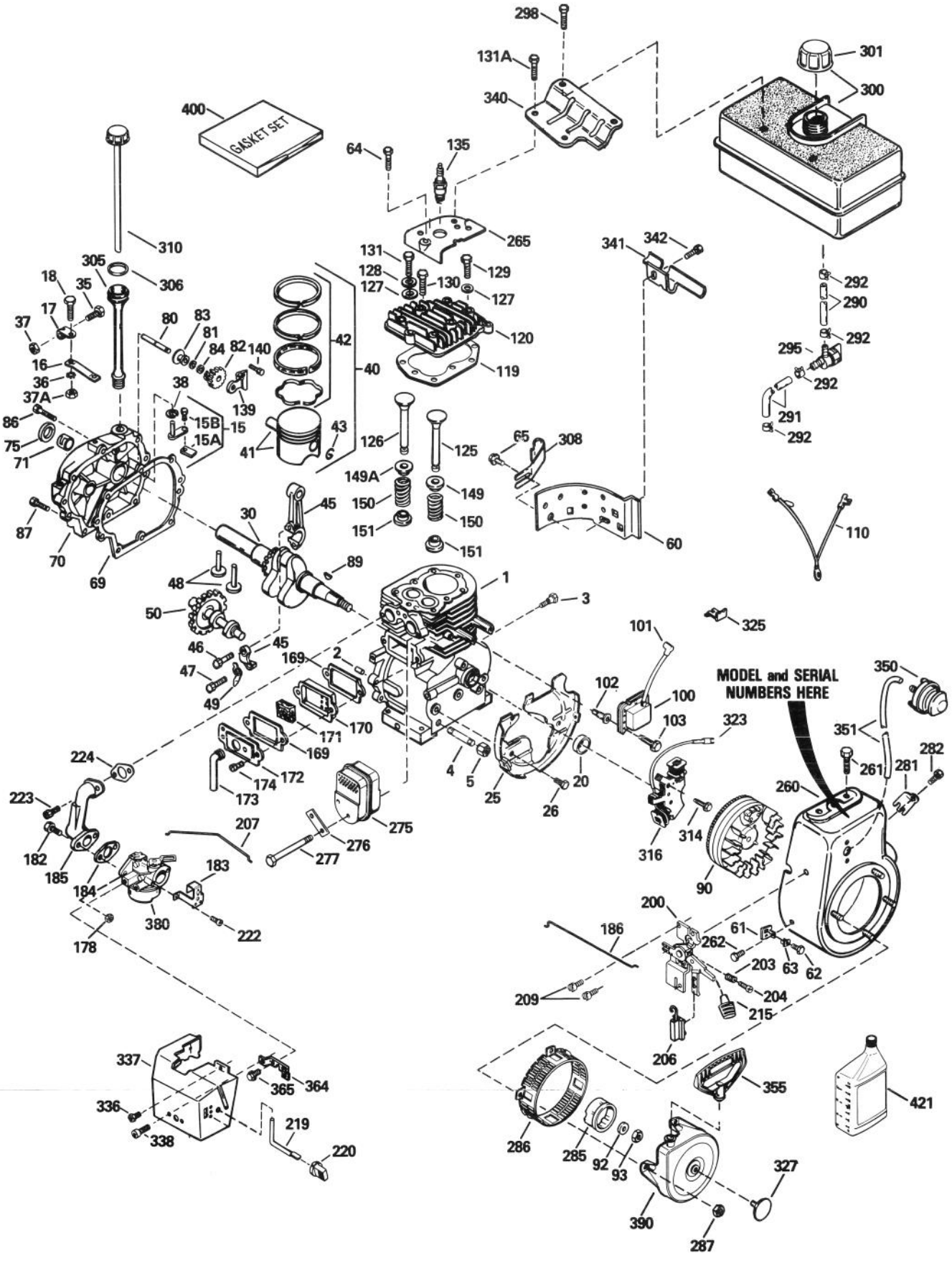

TECUMSEH ENGINE MODEL HMSK100-159227S (Continued)

Ref. No.	Part No.	Description	No. Used
173	35350	Tube – Breather	1
174	650128	Screw – Hex Hd. Sems	2
178	29752	Nut & Lockwasher	2
182	30088A	Screw – Fil. Hd. Sems	2
183	34587	Bracket – Choke	1
*184	27915A	Gasket – Intake Pipe	1
185	33877	Pipe – Intake	1
186	34667	Link – Governor	1
200	34677	Bracket Assy. – Control (Incl. Ref.# 203, 204 & 206)	1
203	31342	Spring – Compression	1
204	650549	Screw – Fil Hd.	1
206	610973	Terminal Assembly	1
207	33878	Link – Governor to Throttle	1
209	650821	Screw – Hex Washer Hd.	2
215	35440	Knob – Control	1
219	34586	Rod – Choke	1
220	35438	Knob – Choke	1
222	28820	Screw – Fil. Hd. Sems	2
223	650378	Screw – Torx Fil Hd. Sems	2
*224	33263	Gasket – Carburetor	1
260	35447A	Housing – Blower	1
261	650788	Screw – Hex Hd.	2
262	29747B	Screw – Hex Hd. Sems	2
265	33272B	Cover – Cylinder Head	1
275	35056	Muffler	1
276	31588	Plate – Lock	1
277	792093	Screw – Flange Hex Hd.	2
281	33013	Cover – Starter Hole	1
282	650760	Screw – Pan Hd. Taptite	1
285	35985	Hub – Starter	1
286	35446	Screen – Starter	1
287	29752	Nut & Lockwasher	4
290	29774	Line – Fuel (8-1/4")	1
291	30705	Line – Fuel (16")	1
292	26460	Clamp – Fuel Line	4
295	35857	Valve – Fuel Shut-Off	1
298	650665	Screw – Hex Washer Hd.	2
300	34156A	Tank Assembly, Fuel (Incl. Ref.# 292 & 301)	1
301	35355	Cap – Fuel Tank	1
305	35554	Tube – Oil Fill	1
306	35499	O-Ring	1
308	35540	Clip – Fill Tube	1
310	36205	Dipstick – Oil	1
314	650873	Screw – Hex Hd. Sems	1
316	611111	Coil Assy., Alternator (18 Watt)	1
323	611118	Terminal	1
325	29443	Clip – Spring	1
327	35392	Plug – Starter	1
336	650765	Screw – Hex Washer Hd.	1
337	35057A	Cover – Carburetor	1
338	28942	Screw – Hex Washer Sems	2
340	34155	Bracket – Fuel Tank	1
341	34154	Plate – Fuel Tank Mounting	1
342	650561	Screw – Hex Washer Hd.	1
350	570682	Primer Assembly	1
351	32180C	Line – Primer	1
355	590574	Starter Handle – Mitten Grip	1
364	33377	Bracket – Carburetor Cover Mounting	1
365	650767	Screw – Hex Washer Hd.	2
380	632370A	Carburetor (Incl. Ref.# 184)	1
390	590672	Starter – Rewind	1
400	33279G	Gasket Set (Incl. items marked *)	1
421	730226	SAE 5W30 4-Cycle Oil (Qt.)	1

* Included in Gasket Set 33279G (Ref.# 400).

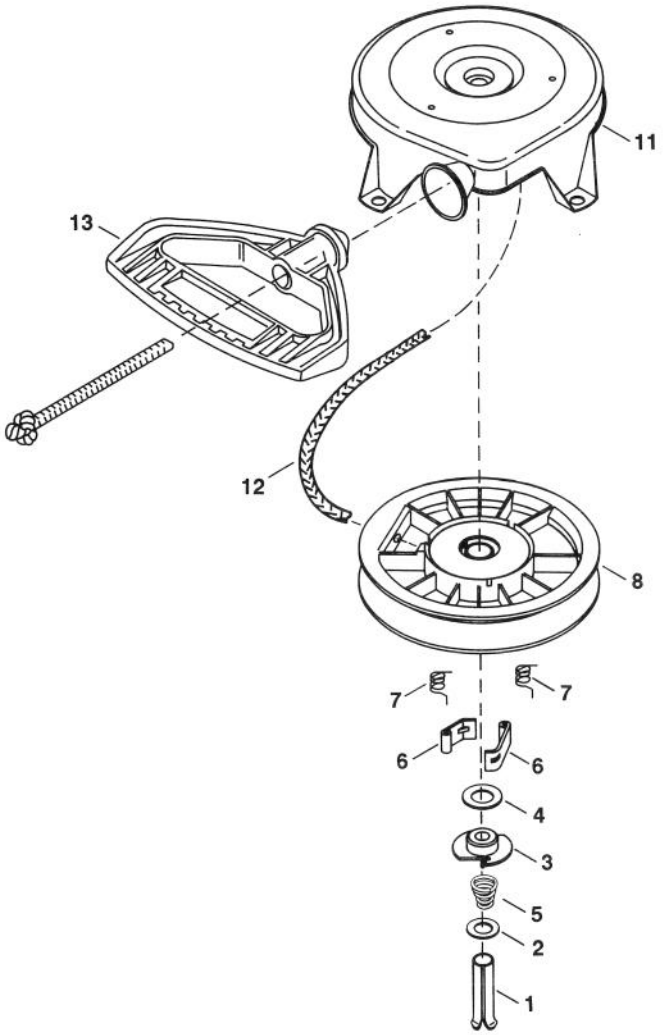

REWIND STARTER NO. 590672

Ref. No.	Part No.	Description	No. Used
1	590599A	Pin – Spring (Incl. Ref.# 4)	1
2	590600	Washer	1
3	590679	Retainer	1
4	590601	Washer	1
5	590678	Spring – Brake	1
6	590680	Dog – Starter	2
7	590412	Spring – Dog	2

Ref. No.	Part No.	Description	No. Used
8	590682	Pulley & Rewind Spring Assy.	1
11	590684	Housing Assy. – Starter	1
12	590456	Rope – Starter (11/64" Dia. & 114" Long)	1
13	590574	Handle – Mitten Grip (Not included with Starter)	1

Litho In USA
LTS 211656