FORM NO. 3315–872

TORO®

MODEL NO. 78425–390001 & UP

PARTS CATALOG

42" Recycler® Mower

For PROLINE 600 Series Traction Unit

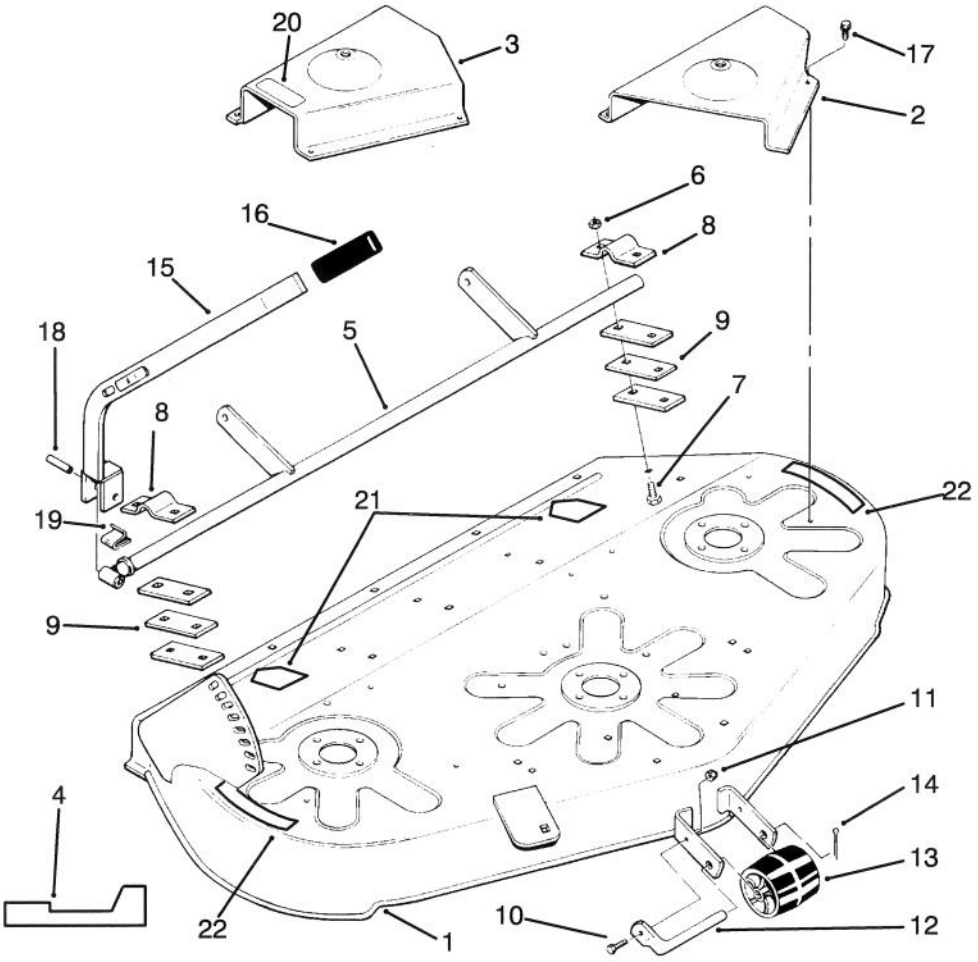

C–0848

DECK & COVER ASSEMBLY

Ref. No.	Part No.	Description	No. Used
1	92–8018	Deck Assembly (Incl. Safety Decals)	1
2	116427	Cover – Belt L.H.	1
3	116426	Cover – Belt R.H.	1
4	79–1301	Decal – Recycler	2
5	118830	Support – Lift	1
6	3296–39	Nut – Lock	4
7	3231–4	Bolt	4
8	110841	Bracket – Pivot	2
9	110840	Bar	6
10	321–4	Bolt	1
11	3296–42	Nut – Lock	1

Ref. No.	Part No.	Description	No. Used
12	110847	Shaft – Roller	1
13	108798	Roller	1
14	3272–21	Pin – Cotter	1
15	79–0990	Lever	1
16	103712	Grip	1
17	32144–4	Bolt	7
18	933244	Pin – Spirol	1
19	112730	Clip – Spring	1
20	111655	Decal – Height	1
21	43–8480	Decal – Danger	2
22	76–4070	Decal – Danger	2

© The TORO Company –1993
All rights reserved.

TPS

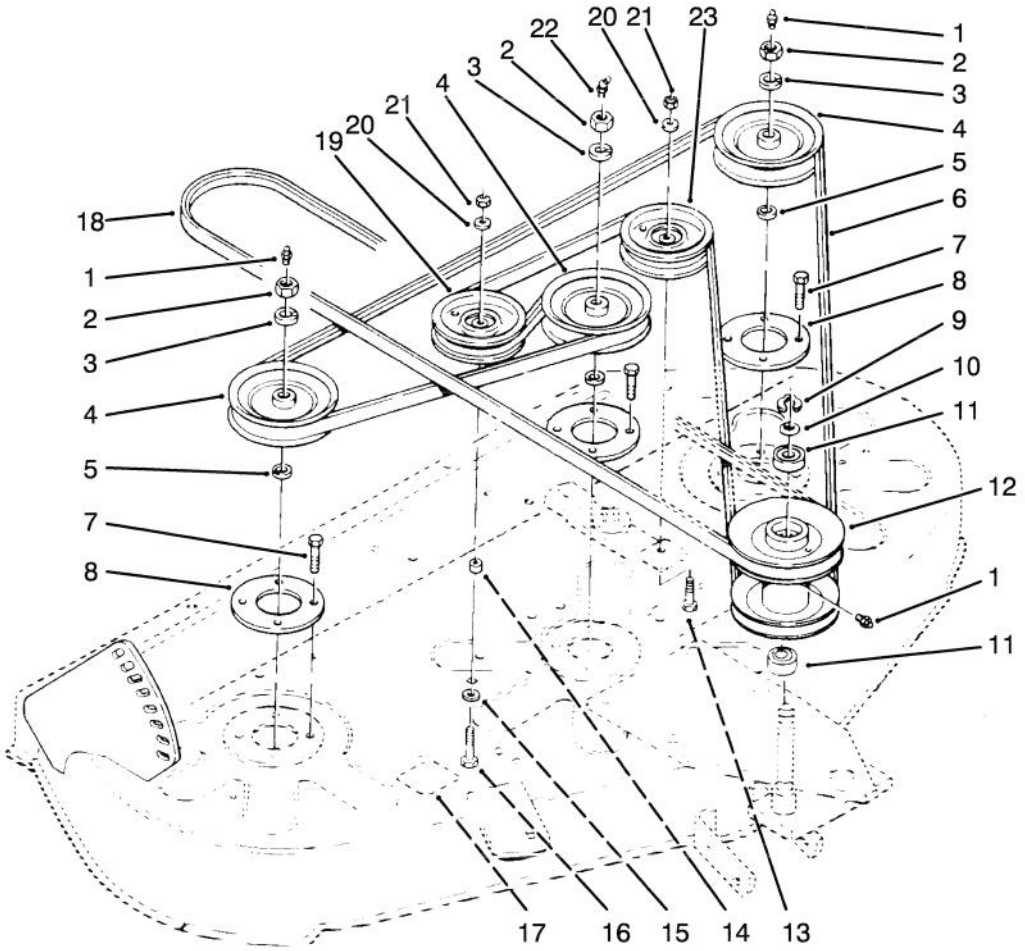

C–0844

PULLEY ASSEMBLY

Ref. No.	Part No.	Description	No. Used
1	302–5	Fitting – Grease	3
2	3220–6	Nut – Jam	3
3	3253–8	Washer – Lock	3
4	116170	Pulley	3
5	920215	Washer	3
6	116409	Belt – Spindle	1
7	9080326	Screw	12
8	116073	Spacer	3
9	105005	Ring – Retaining	1
10	971015	"O"Ring	1
11	109966	Bearing	2
12	116425	Pulley	1

Ref. No.	Part No.	Description	No. Used
13	323–8	Bolt	1
14	110856	Spacer	1
15	2844	Washer	1
16	323–11	Bolt	1
17	116286	Decal – Belt Installation	1
18	116408	Belt	1
19	115119	Pulley – Idler	1
20	3256–24	Washer	2
21	3296–39	Nut – Lock	2
22	1481	Fitting – Grease	1
23	116859	Pulley – Idler	1

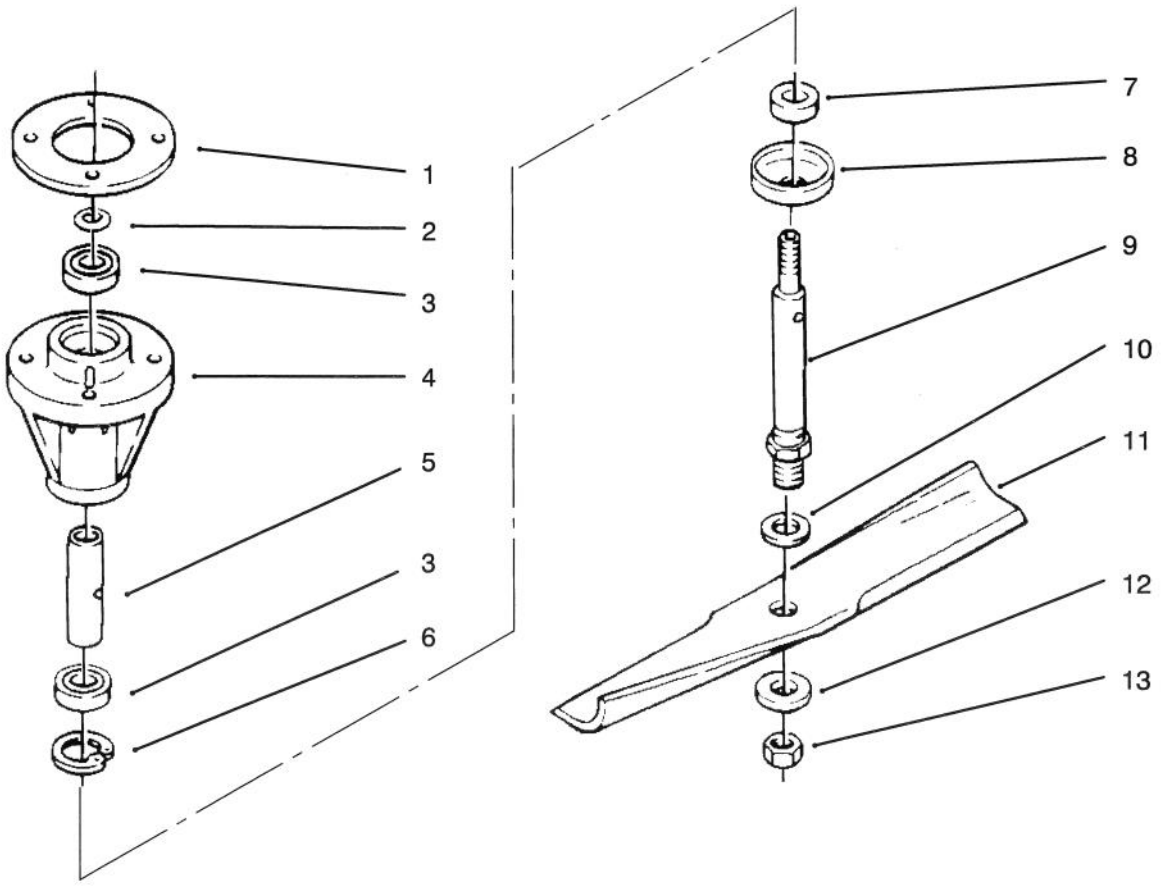

C–0844

SPINDLE & BLADE ASSEMBLY

Ref. No.	Part No.	Description	No. Used
1	116073	Spacer	3
2	971015	"O"Ring	3
3	109966	Bearing	6
4	114568	Housing – Spindle	3
5	116085	Spacer	3
6	32120–42	Ring – Internal Snap	3
7	106068	Spacer	3
8	106067	Cup – Spindle	3

Ref. No.	Part No.	Description	No. Used
9	112674	Shaft Spindle	3
10	920257	Washer – Special	3
11	14–4879	Kit – Blade	1
12	3256–28	Washer – Special	3
13	3320–7	Nut – Jam	3
	110172	Spindle Assembly (Incl. Ref.# 2–9)	3

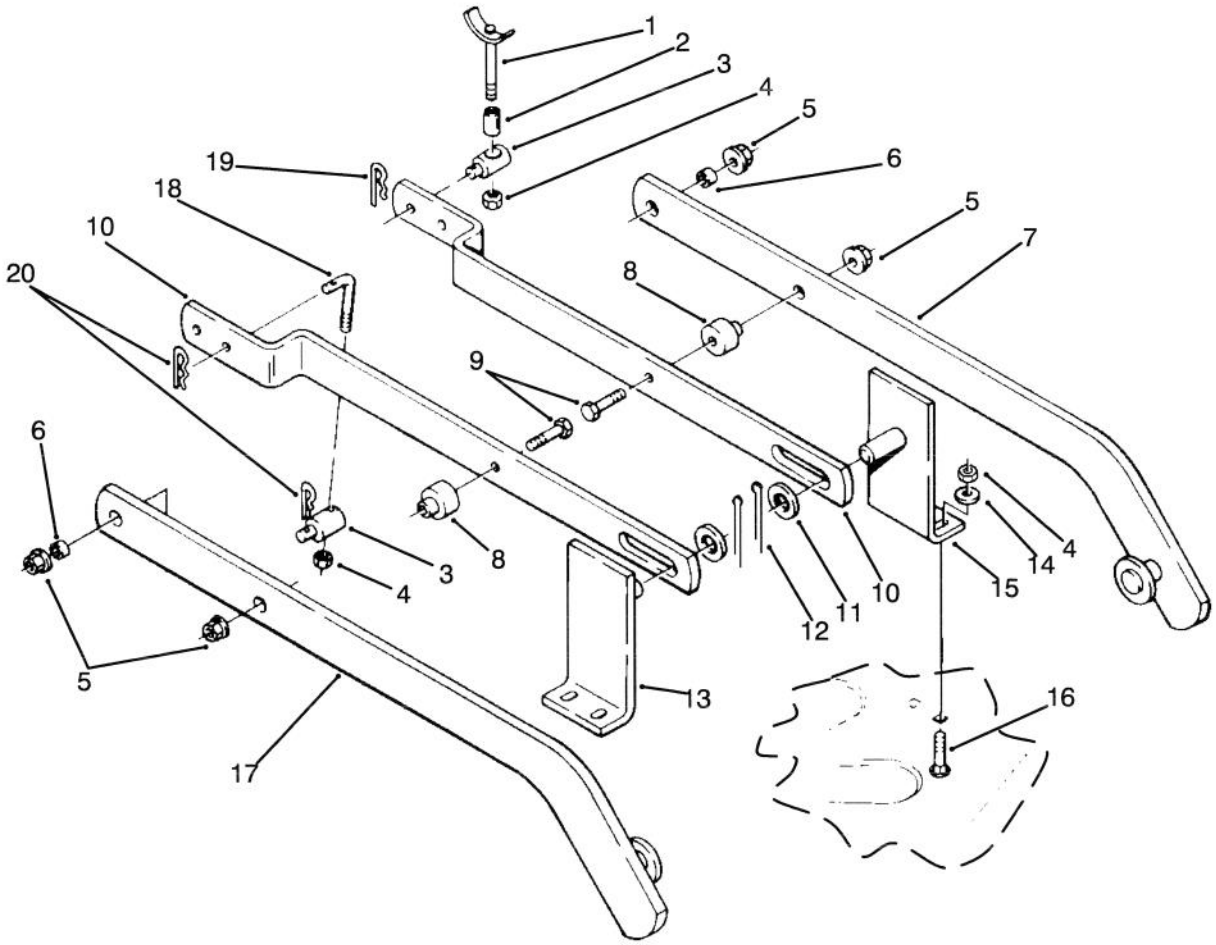

C–0844

LIFT ASSEMBLY

Ref. No.	Part No.	Description	No. Used
1	116816	Rod – Hanger	2
2	979180	Spacer	2
3	116815	Trunnion	4
4	3296–39	Nut – Lock	6
5	102809	Nut – Flange Lock	4
6	115705	Spacer	2
7	117071	Bar – Draft L.H.	1
8	115706	Spacer	2
9	323–9	Bolt	2
10	120070	Bar – Leveler	2

Ref. No.	Part No.	Description	No. Used
11	3256–27	Washer	2
12	3272–22	Pin – Cotter	2
13	117110	Bracket – R.H.	1
14	3256–24	Washer	4
15	117109	Bracket	1
16	3231–2	Bolt	4
17	117072	Bar – Draft R.H.	1
18	121010	Rod – Lift	2
19	933504	Pin – Cotter	2
20	3272–6	Pin – Cotter	4

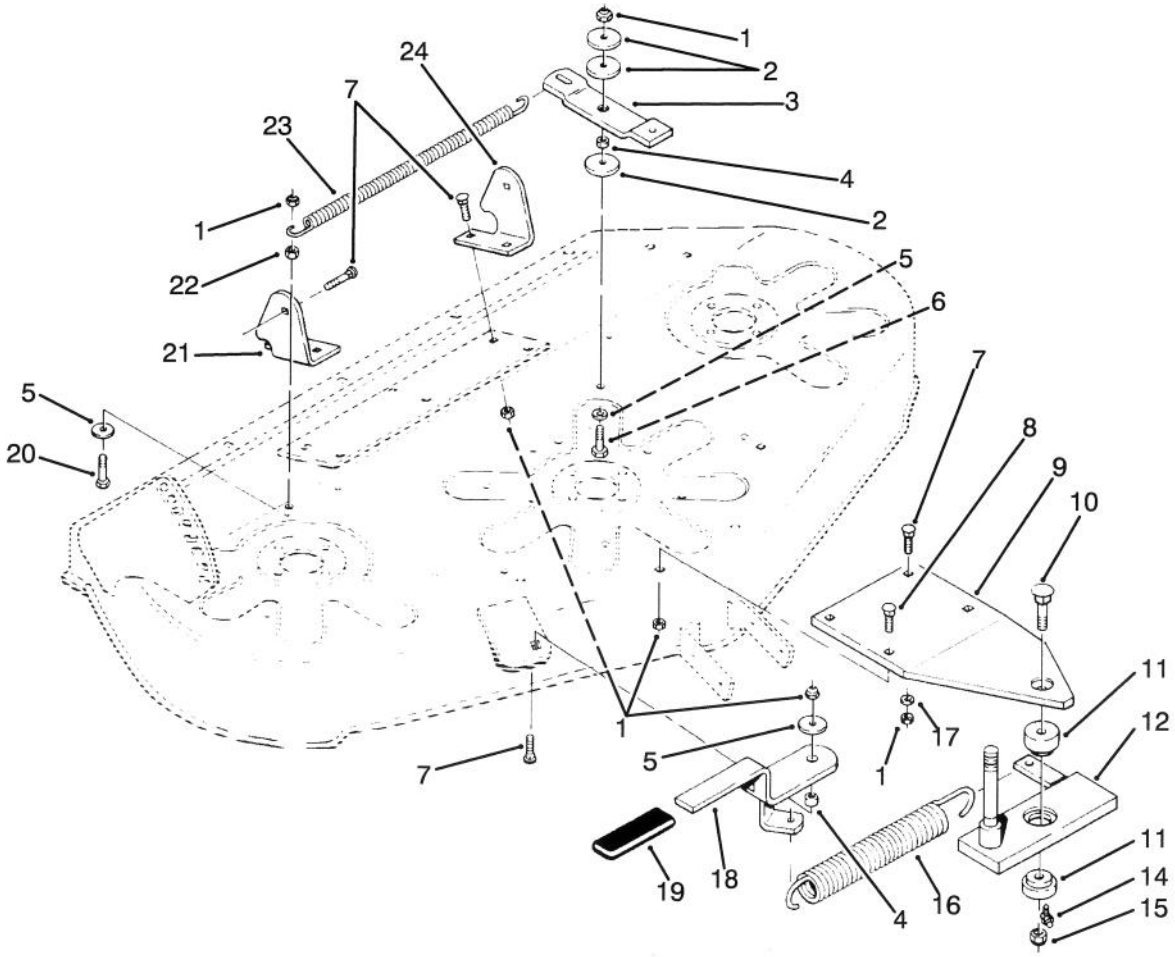

C–0846

SUSPENSION ASSEMBLY

Ref. No.	Part No.	Description	No. Used
1	3296–39	Nut – Lock	9
2	920249	Washer – Special	3
3	116171	Arm – Idler	1
4	4627	Spacer	1
5	2844	Washer – Special	2
6	323–8	Bolt	1
7	3231–25	Bolt – Carriage	9
8	3231–2	Bolt	1
9	116411	Plate	1
10	9002719	Bolt – Carriage	1
11	116621	Bushing	2
12	116368	Shaft – Counter	1

Ref. No.	Part No.	Description	No. Used
14	111420	Fitting – Grease	1
15	3296–23	Nut – Lock	1
16	116167	Spring	1
17	920246	Washer – Flat	2
18	117041	Lever	1
19	103712	Grip	1
20	323–7	Bolt	1
21	117104	Bracket – R.H.	1
22	3217–7	Nut	1
23	116172	Spring	1
24	117103	Bracket – L.H.	1

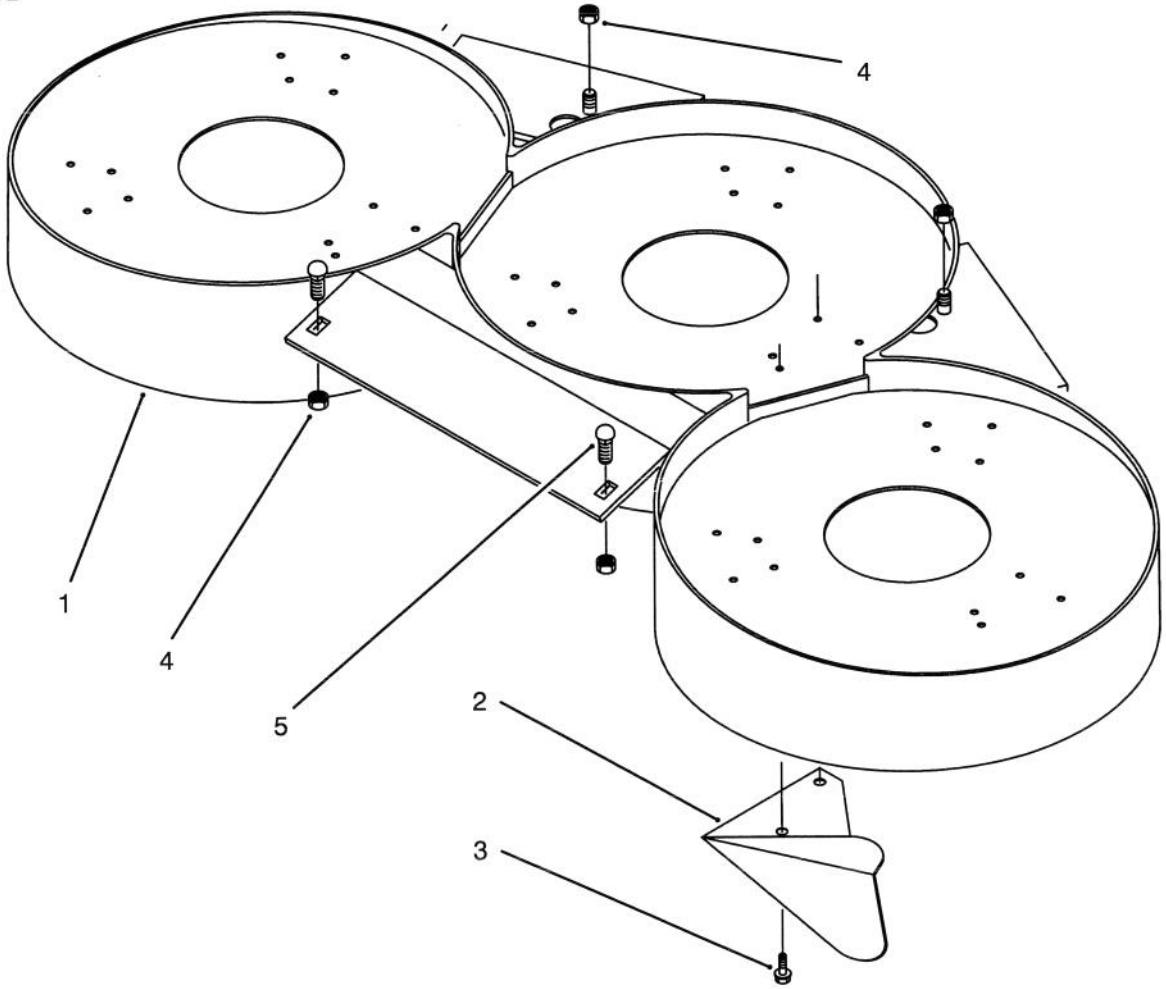

BAFFLE ASSEMBLY

Ref. No.	Part No.	Description	No. Used
1	79–2960	Baffle	1
2	80–2630	Kicker	9
3	32144–4	Screw	18

Ref. No.	Part No.	Description	No. Used
4	3296–39	Nut – Lock	4
5	3231–25	Bolt – Carriage	2

TORO PART NUMBER INDEX

Part No.	Description	Pg. No.	Ref. No.	Qty.
1481	Fitting – Grease	2	22	1
2844	Washer	2	15	1
2844	Washer – Special	5	5	2
4627	Spacer	5	4	1
102809	Nut – Flange Lock	4	5	4
103712	Grip	1	16	1
103712	Grip	5	19	1
105005	Ring – Retaining	2	9	1
106067	Cup – Spindle	3	8	3
106068	Spacer	3	7	3
108798	Roller	1	13	1
109966	Bearing	3	3	6
109966	Bearing	2	11	2
110172	Spindle Assembly	3		3
110840	Bar	1	9	6
110841	Bracket – Pivot	1	8	2
110847	Shaft – Roller	1	12	1
110856	Spacer	2	14	1
111420	Fitting – Grease	5	14	1
111655	Decal – Height	1	20	1
112674	Shaft Spindle	3	9	3
112730	Clip – Spring	1	19	1
114568	Housing – Spindle	3	4	3
115119	Pulley – Idler	2	19	1
115705	Spacer	4	6	2
115706	Spacer	4	8	2
116073	Spacer	3	1	3
116073	Spacer	2	8	3
116085	Spacer	3	5	3
116167	Spring	5	16	1
116170	Pulley	2	4	3
116171	Arm – Idler	5	3	1
116172	Spring	5	23	1
116286	Decal – Belt Installation	2	17	1
116368	Shaft – Counter	5	12	1
116408	Belt	2	18	1
116409	Belt – Spindle	2	6	1
116411	Plate	5	9	1
116425	Pulley	2	12	1
116426	Cover – Belt R.H.	1	3	1
116427	Cover – Belt L.H.	1	2	1
116621	Bushing	5	11	2
116815	Trunnion	4	3	4
116816	Rod – Hanger	4	1	2
116859	Pulley – Idler	2	23	1
117041	Lever	5	18	1
117071	Bar – Draft L.H.	4	7	1
117072	Bar – Draft R.H.	4	17	1
117103	Bracket – L.H.	5	24	1
117104	Bracket – R.H.	5	21	1
117109	Bracket	4	15	1
117110	Bracket – R.H.	4	13	1
118830	Support – Lift	1	5	1
120070	Bar – Leveler	4	10	2
121010	Rod – Lift	4	18	2
920215	Washer	2	5	3
920246	Washer – Flat	5	17	2
920249	Washer – Special	5	2	3
920257	Washer – Special	3	10	3
933244	Pin – Spirol	1	18	1
933504	Pin – Cotter	4	19	2
971015	"O"Ring	3	2	3
971015	"O"Ring	2	10	1
979180	Spacer	4	2	2
9002719	Bolt – Carriage	5	10	1
9080326	Screw	2	7	12
14–4879	Kit – Blade	3	11	1
43–8480	Decal – Danger	1	21	2
76–4070	Decal – Danger	1	22	2
79–0990	Lever	1	15	1
79–1301	Decal – Recycler	1	4	2
79–2960	Baffle	6	1	1
80–2630	Kicker	6	2	9
92–018	Deck Assembly	1	1	1
302–5	Fitting – Grease	2	1	3
321–4	Bolt	1	10	1
323–7	Bolt	5	20	1
323–8	Bolt	5	6	1
323–8	Bolt	2	13	1
323–9	Bolt	4	9	2
323–11	Bolt	2	16	1
3217–7	Nut	5	22	1
3220–6	Nut – Jam	2	2	3
3231–2	Bolt	5	8	1
3231–2	Bolt	4	16	4
3231–4	Bolt	1	7	4
3231–25	Bolt – Carriage	6	5	2
3231–25	Bolt – Carriage	5	7	9
3253–8	Washer – Lock	2	3	3
3256–24	Washer	4	14	4
3256–24	Washer	2	20	2
3256–27	Washer	4	11	2
3256–28	Washer – Special	3	12	3
3272–6	Pin – Cotter	4	20	4
3272–21	Pin – Cotter	1	14	1
3272–22	Pin – Cotter	4	12	2
3296–23	Nut – Lock	5	15	1
3296–39	Nut – Lock	5	1	9
3296–39	Nut – Lock	4	4	6
3296–39	Nut – Lock	6	4	4
3296–39	Nut – Lock	1	6	4
3296–39	Nut – Lock	2	21	2
3296–42	Nut – Lock	1	11	1
32120–42	Ring – Internal Snap	3	6	3
32144–4	Bolt	1	17	7
32144–4	Screw	6	3	18
3320–7	Nut – Jam	3	13	3

*Not Illustrated

PRODUCT CHANGES

In an effort to make improvements available to TORO owners as quickly as possible, minor changes are incorporated into Toro's products from time to time that do not become immediately shown in the Parts Catalog. If such a change has been made in your unit, which is not reflected in your manual, see your TORO Distributor or his Authorized TORO Service Dealer for information and part numbers.

COUNTRIES OTHER THAN THE UNITED STATES OR CANADA

Customers who have purchased TORO products exported from the United States or Canada should contact their Toro Distributor (Dealer) to obtain guarantee policies for your country, province or state. If for any reason you are dissatisfied with your Distributor's service or have difficulty obtaining guarantee information, contact the TORO importer. If all other remedies fail, you may contact us at The Toro Company.

MAINTENANCE RECORD

Date								

Compliance with Radio Interference Regulations Certified.
Certifie Conforme au Reglement sur le Brouillage Radioelectrique.

Litho in U.S.A.