Form No. 3360-628 Rev A

Replacement Engine and Switch Kit

Greensmaster 800/1000/1600 Mower

Model No. 115-1898

Installation Instructions

Note: The replacement engine is shipped with a On/Off toggle switch which has to be installed on the mowers control panel.

Loose Parts

Use the chart below to verify that all parts have been shipped.

Procedure	Description	Qty.	Use
1	Engine assembly	1	Replace the engine
2	Template Switch assembly Decal/washer assembly	1 1 1	Install the on/off switch
3	Wire harness Cable tie	1 2	Install wire harness
4	No parts required	–	

1

Replace the Engine

Parts needed for this procedure:

1	Engine assembly

Procedure

Refer to the Toro Service Manual for information on engine replacement.

Note: Remove the safety module w/screw and washer, ground wire mounting fasteners and R-clamp from the old engine and retain them for reuse on the new engine (Figure 1). Note the location of all the electrical connections before disconnecting them.

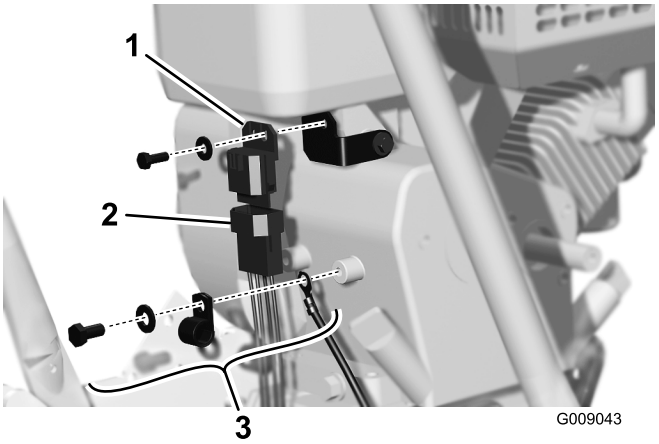

Figure 1

1. Safety module
2. Safety module harness connector
3. Ground wire, mounting fasteners and R-clamp

© 2008 —The Toro® Company
8111 Lyndale Avenue South
Bloomington, MN 55420

Register at www.Toro.com.

CE

Original Instructions (EN)
Printed in the USA.
All Rights Reserved

2

Install the On/Off Toggle Switch

Parts needed for this procedure:

1	Template
1	Switch assembly
1	Decal/washer assembly

Procedure

1. Remove the backing from the template decal (Figure 2).
2. Affix the template decal directly over the Toro logo on the front of the console (Figure 2).
3. At the locations marked on template decal, drill (2) .125 inch diameter holes through the console.

   Note: Make sure there are no wires, cables or other objects behind the area to be drilled.
4. Drill the upper hole out to .500 inch diameter. Remove any burrs from the drilled holes.
5. Remove the template decal from the console.
6. Install the ON/OFF toggle switch as follows:
   A. Remove and discard the tabbed washer from the new switch assembly.
   B. Thread a jam nut onto the switch threads. Also, insert a wave washer onto the switch threads (Figure 3).
   C. From the back of the console, insert the switch into the larger drilled hole (Figure 3).
   D. Slide the new tabbed washer w/decal onto the switch while inserting the tab into the small drilled hole (Figure 3).
   E. Secure the switch and components to the console with the wave washer and (2) jam nuts (Figure 3).

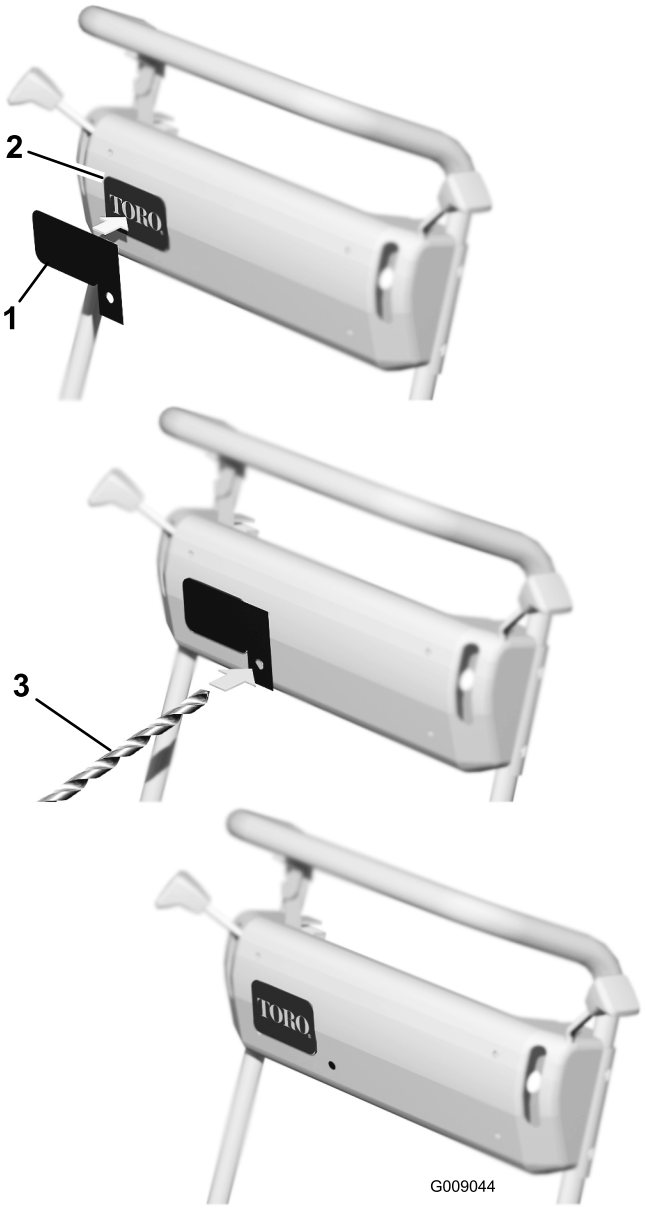

Figure 2

1. Template decal
2. Toro logo on the front of the console
3. Drill

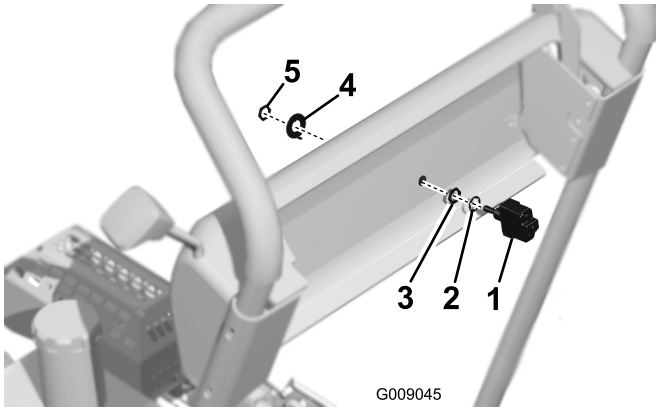

Figure 3

1. On/off switch
2. Jam nuts (2)
3. Wave washer
4. Tabbed washer w/decal

3

Install Wire Harness

Parts needed for this procedure:

1	Wire harness
2	Cable tie

Procedure

1. Mount the safety module, removed from old engine, to the back of the new engine with the screw and washer previously removed (Figure 4).

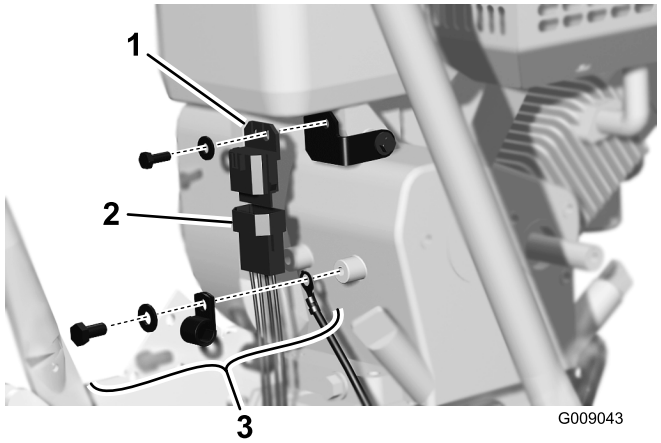

Figure 4

1. Safety module
2. Safety module wire harness connector
3. Ground wire, mounting fasteners and R-clamp

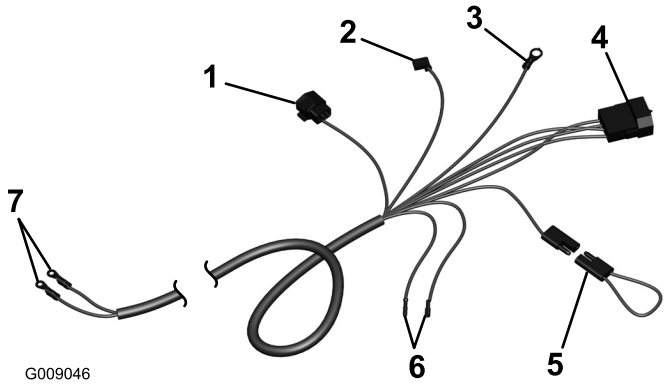

Figure 5

1. Engine magneto
2. Hour meter (optional)
3. Engine ground ring terminal
4. Safety module connector
5. Operator presence w/ loopback connector
6. Interlock switch
7. Engine on/off

2. Connect the wire harness as follows:
   A. Plug the wire harness connector into the safety module (Figure 4).
   B. Plug the wire harness connectors into the interlock switch (Figure 5).
   C. If the mower is equipped with the optional operator presence control, remove the loop back connector from the harness connector and plug the connector into the operator presence connector (Figure 5).
   D. Plug the wire harness connector into the engine magneto.
   E. If the mower is equipped with an optional hour meter, plug the connector into the hour meter (Figure 5).
   F. Mount the harness ground wire ring terminal to the engine boss with a external tooth lock washer and cap screw (Figure 4). Use the right hand boss on the rear of the engine.

      Note: Feed the engine wires through the R–clamp.

   G. Route the wire harness up the right side of the handle to the on/off switch (Figure 5). Connect the white lead terminal to the bottom terminal (#3) on the toggle switch. Connect the black lead terminal to the common terminal (#2) on the toggle switch. Apply skin over grease or equivalent to the exposed switch terminals.
   H. Secure the wire harness to the handle tube using the (2) cable ties. Check all the wires for excess bending, chaffing or interference with mounting parts.

4

Test the System Operation

No Parts Required

Procedure

- Check the operation of the On/Off switch.
- Verify that the interlock switch is operating properly, refer to Checking the Interlock Switch Operation in the Operators Manual.
- Check the operation of the lights, if applicable.