FORM NO. 3315–901

TORO®

MODEL NO. 20181–3900001 & UP

PARTS CATALOG

18" RECYCLER®
Mower

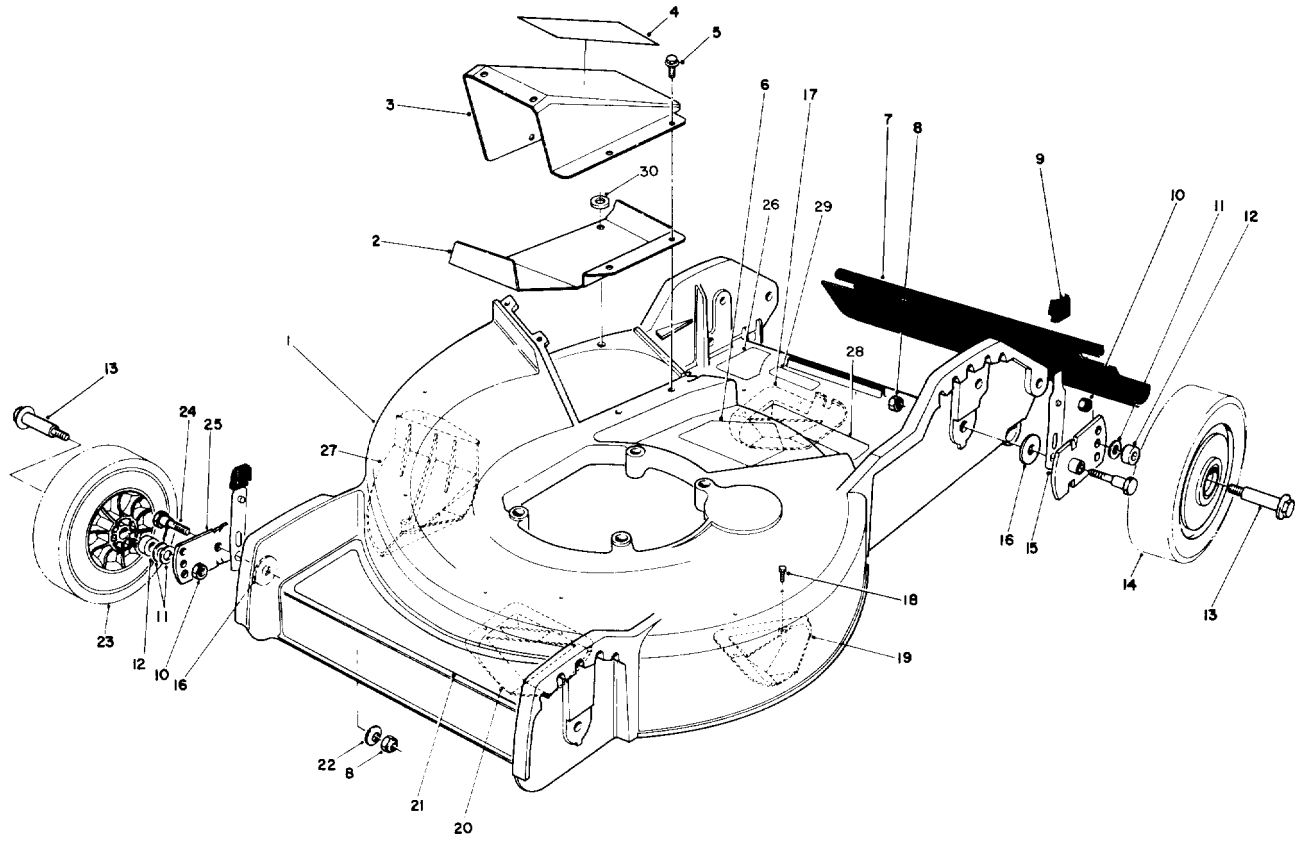

C–1450

HOUSING ASSEMBLY

Ref. No.	Part No.	Description	No. Used
1	14–7389	Housing – 18' (Incl. Ref. #6, 17–20, & 27–29)	1
2	85–7150	Deflector – Cover	1
3	14–7369	Cover – Discharge (Incl. Ref. #4)	1
4	85–7060	Decal – Cover	1
5	12–3270	Screw – Thr'd Forming	7
6	39–5770	Decal – Danger	1
7	33–2380	Shield – Rear Safety	1
8	3296–29	Nut – Lock	4
9	25–7740	Knob – Arm	4
10	3296–5	Nut – Lock	4
11	40–1940	Washer – Wheel Bolt	8
12	86–9680	Spacer – Wheel	4
13	27–6230	Bolt – Wheel	4
14	27–6201	Wheel & Tire Assembly	2
15	25–8000	Spring Arm Assembly	4
16	33–0390	Washer – Pivot	4
17	85–7130	Kicker – Rear Right	1
18	32144–111	Screw – Pan Hd.	8
19	85–7110	Kicker – Front Right	1
20	85–7120	Kicker – Front Left	1
21	92–3045	Decal – Deck	1
22	3290–456	Washer – Belleville	2
23	27–6211	Wheel & Tire Assembly	2
24	3–0655	Screw – Pivot	4
25	33–0400	Pivot Arm Assembly	4
26	82–8450	Decal – Danger	1
27	85–7140	Kicker – Rear Left	1
28	71–1280	Decal – Danger	1
29	92–1779	Decal – Danger	1
30	3256–22	Washer – Flat	1

© The TORO Company – 1993
All Rights Reserved

TPS

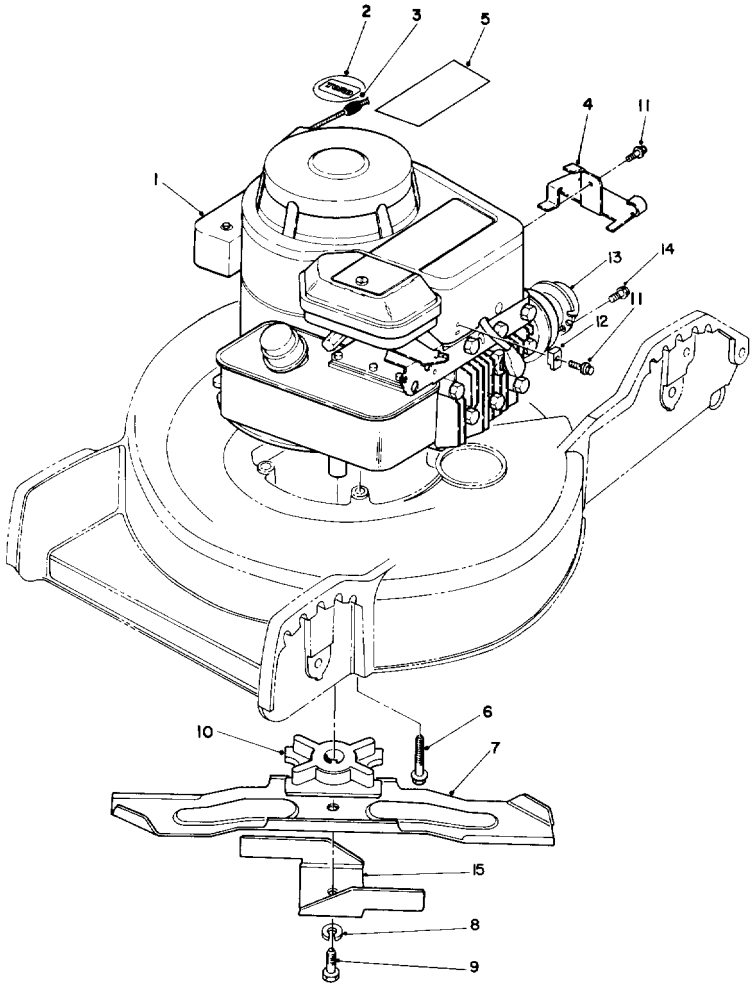

C–1451

ENGINE ASSEMBLY

Ref. No.	Part No.	Description	No. Used
1		Engine	1
2	92–2296	Decal – Toro	1
3	2210–316	Stop – Rope	1
4	88–0460	Bracket – Cable	1
5	92–3145	Decal – Engine	1
6	32144–106	Screw – Engine	3
7	86–5210	Blade – 18"	1
8	3253–22	Lockwasher	1
9	26–0671	Screw – Blade	1
10	49–7890	Retainer – Blade	1
11	86–7990	Screw – Hex Washer Hd. Self Tapping	2
12	86–7980	Clamp – Casing	1
13	2210–174	Shield – Muffler	1
14	2210–173	Screw – Deflector	2
15	92–3075	Accelerator – 18"	1

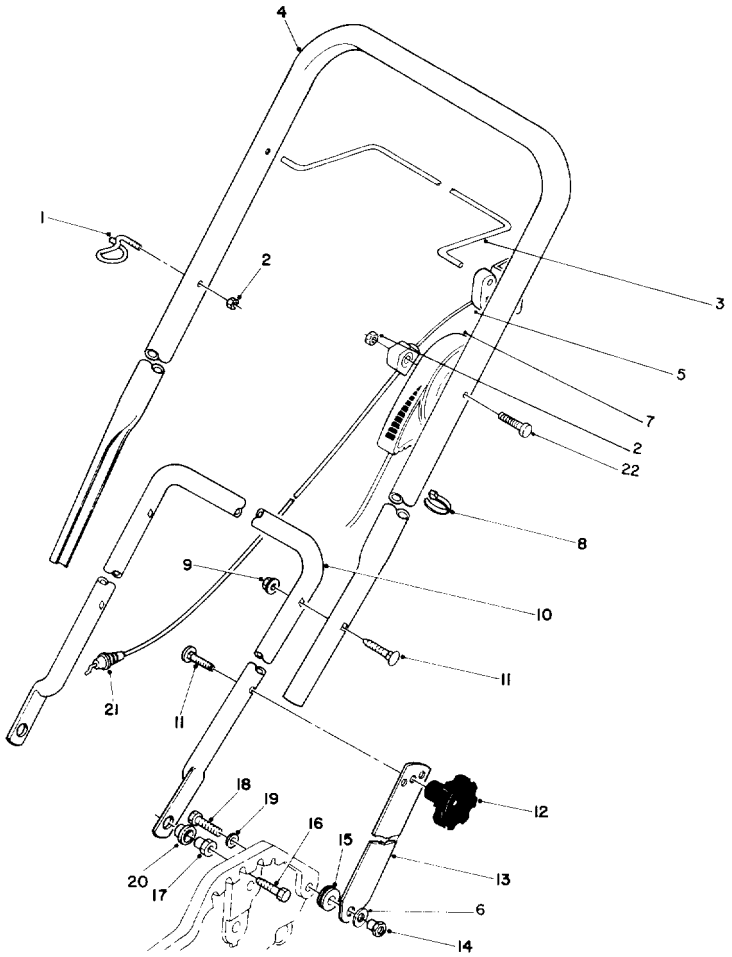

C-1452

HANDLE & THROTTLE CONTROL ASSEMBLY

Ref. No.	Part No.	Description	No. Used
1	86-9671	Guide - Rope	1
2	3296-73	Nut - Lock	2
3	86-9740	Bar - Control	1
4	86-7950	Handle - Upper	1
5	92-5412	Stop - Pivot	1
6	40-1940	Washer - Flat	2
7	92-3121	Control - Throttle	1
8	3290-378	Tie - Cable	2
9	3296-74	Nut - Flange Lock	2
10	50-9921	Handle - Lower	1
11	92-4095	Screw - Handle	4

Ref. No.	Part No.	Description	No. Used
12	19-4050	Knob - Handle	2
13	43-1372	Latch - Handle	2
14	47-4990	Post	2
15	237-136	Grommet	2
16	322-5	Screw - Hex Hd. Cap	2
17	12-2080	Nut - Shoulder	2
18	321-8	Screw - Hex Hd. Cap	2
19	3253-3	Washer - Lock	2
20	86-7960	Bushing - Flange	2
21	92-3128	Cable - Brake	1
22	321-33	Screw - Hex Hd. Cap	1

ENGINE BRIGGS & STRATTON MODEL 95902-3148-01

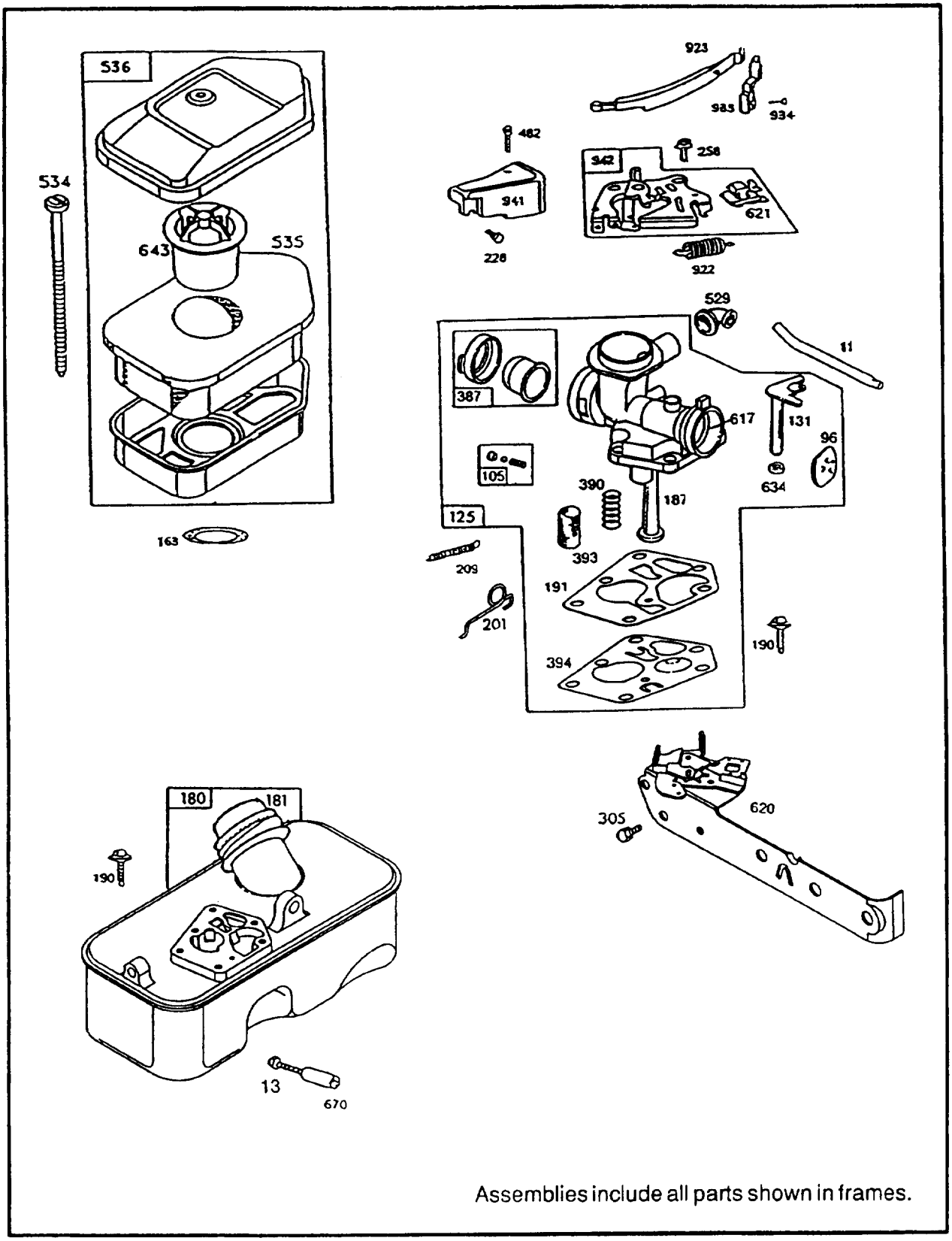

Assemblies include all parts shown in frames.

ENGINE BRIGGS & STRATTON MODEL 95902-3148-01

Ref. No.	Part No.	Description	No. Used
11	231774	Tube-Breather	1
13	93111	Screw-Hex. Head (1-15/16" Long)	1
96	224412	Valve-Throttle	1
105	494409	Needle Valve Seat Assy.	1
125	494407	Carburetor Assembly	1
131	281047	Shaft and Lever-Throttle	1
*163	271139	Gasket-Air Cleaner Mtg.	1
180	494406	Tank Assembly-Fuel	1
181	493982	Cap-Fuel Tank	1
187	493981	Pipe Assy.-Fuel Pick-Up	1
190	93440	Screw-Fuel Tank Mtg.	1
191	272372	Gasket-Pump	1
201	262753	Link-Governor	1
209	262760	Spring-Governor	1
228	93490	Screw-Hex. Head	1
258	94018	Screw-Sem (Bracket to Cylinder)	1
305	94153	Screw-Blo. Hsg. Mtg.	1
387	494408	Primer Bulb Assy.	1
390	262764	Spring-Diaphragm	1
393	262734	Screen-Jet	1
394	281028	Diaphragm-Carburetor	1
482	93621	Screw-Sem	1
529	67838	Grommet-Breather	1
534	93865	Screw-Air Cleaner	1
535	272235	Element-Air Cleaner	1
536	493492	Cleaner Assembly-Air	1
617	270344	Seal-Fuel Intake Tube	1
620	494630	Plate-Carb. Control	1
621	396847	Switch-Stop	1
634	281080	Seal-Throttle Shaft	1
643	280972	Cup-Air Cleaner	1
670	94038	Spacer-Fuel Tank	1
922	261647	Spring-Band Brake	1
923	394867	Brake Assembly-Band	1
933	223448	Pivot-Band Brake	1
934	94037	Screw-Band Brake Pivot	1
941	280395	Cover-Linkage	1
942	493248	Bracket and Lever Assy.	1

* Included in Gasket Set-Part No. 298989.

ENGINE BRIGGS & STRATTON MODEL 95902-3148-01

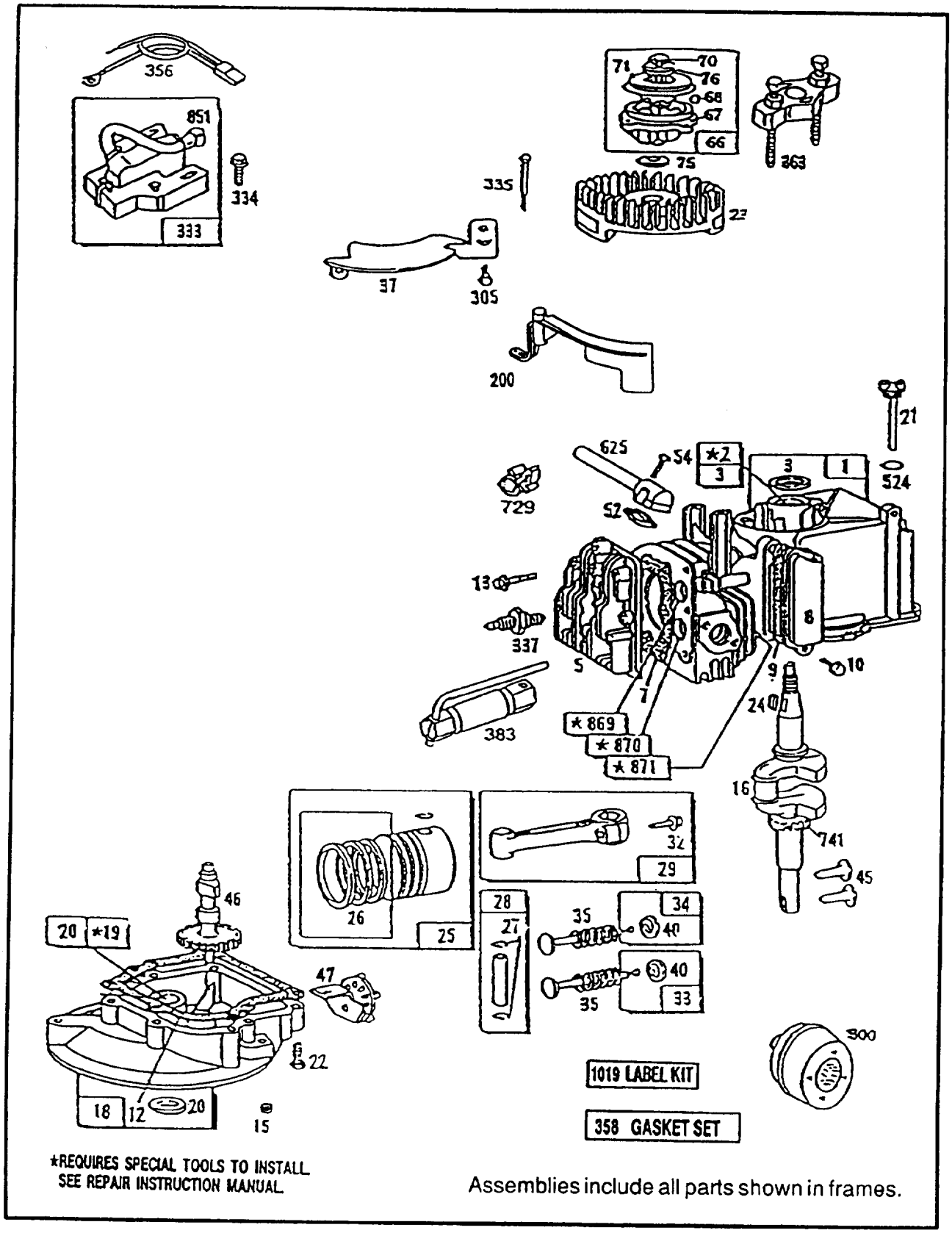

*REQUIRES SPECIAL TOOLS TO INSTALL
SEE REPAIR INSTRUCTION MANUAL

Assemblies include all parts shown in frames.

ENGINE BRIGGS & STRATTON MODEL 95902-3148-01

Ref. No.	Part No.	Description	No. Used
1	399164	Cylinder Assembly	1
2	293708	Bushing-Cylinder	1
		Note: Requires Special Tools for Installation.	
*3	299819	Seal-Oil	1
5	211479	Head-Cylinder	1
*7	272170	Gasket-Cylinder Head	1
8	298383	Breather-Vlv. Chamber	1
*9	270239	Gasket-Valve Cover	1
10	93394	Screw-Breather	1
*12	270833	Gasket-Crankcase (.015" Thick, Std.)	1
*	270895	Gasket-Crankcase (.005" Thick)	1
*	270896	Gasket-Crankcase (.009" Thick)	1
13	93111	Screw-Hex. Head (1-15/16" Long)	1
15	94613	Plug-Oil Drain	1
16	495222	Crankshaft	1
		Note: To Replace Timing Gear Pin, Order Part No. 230978.	1
18	395384	Sump-Engine	1
19	293709	Bushing-Engine Sump	1
		Note: Requires Special Tools for Installation.	
*20	391483	Seal-Oil	1
21	281081	Plug-Oil Filler	1
22	93032	Screw-Mtg. Sem	1
23	395653	Flywheel-Magneto	1
24	222698	Key-Flywheel	1
25	298904	Piston Assy. (Standard)	1
	298905	Piston Assy. (.010" O.S.)	1
	298906	Piston Assy. (.020" O.S.)	1
	298907	Piston Assy. (.030" O.S.)	1
		PISTON RING SETS:	
26	298982	Ring Set-Piston (Standard)	1
	298983	Ring Set-Piston (.010" O.S.)	1
	298984	Ring Set-Piston (.020" O.S.)	1
	298985	Ring Set-Piston (.030" O.S.)	1
27	26026	Lock-Piston Pin	1
28	298909	Pin Assembly-Piston (Standard)	1
	298908	Pin Assy.-Piston (.005" O.S.)	1
29	294201	Rod Assy.-Connecting	1
		Note: For Conncecting Rod with .020" Undersize Crankpin Bore-Order No. 296079.	1

Ref. No.	Part No.	Description	No. Used
32	94404	Screw-Connecting Rod	1
33	296676	Valve-Exhaust	1
34	296677	Valve-Intake	1
35	260552	Spring-Intake Valve	1
37	223150	Guard-Flywheel	1
40	93312	Retainer-Valve Spring	1
45	230173	Tappet-Valve	1
46	491675	Gear-Cam	1
47	491688	Oil Slinger Gear and Bracket	1
*52	270345	Gasket-Intake Elbow	1
54	93485	Screw-Intake Elbow Mtg.	1
66	399671	Clutch Assy.-Rew. Starter	1
67	394897	Housing-Starter Clutch	1
68	63770	Ball-Clutch	1
70	298799	Ratchet-Rewind Starter	1
71	394506	Washer-Clutch Retainer	1
75	223047	Washer-Spring	1
76	68238	Washer-Ratchet Sealing	1
200	281024	Blade-Governor	1
300	394569	Muffler-Exhaust	1
305	94153	Screw-Blower Hsg. Mtg.	1
333	398593	Armature-Magneto	1
334	93381	Screw-Armature Mounting Sem	1
335	93435	Screw-Armature and Governor Blade Mtg.	1
337	492167	Plug-Spark	1
356	398808	Wire-Ground	1
358	298989	Gasket Set	1
363	19069	Puller-Flywheel	1
383	89838	Wrench-Spark Plug	1
*524	271485	Seal-Filler Tube	1
625	298775	Tube-Fuel Intake	1
729	280470	Clip-Wire	1
741	261533	Gear-Timing	1
851	221798	Terminal-Ignition Cable	1
869	211172	Seat-Intake Valve	1
870	211291	Seat-Exhaust Valve	1
		Note: For Installation and Options See Repair Manual.	
871	231348	Guide-Exhaust Valve	1
		Note: 63709 Guide-Int. Valve See Repair Manual.	
1019	491082	Label Kit	1

* Included in Gasket Set-Part No. 298989.

ENGINE BRIGGS & STRATTON MODEL 95902-3148-01

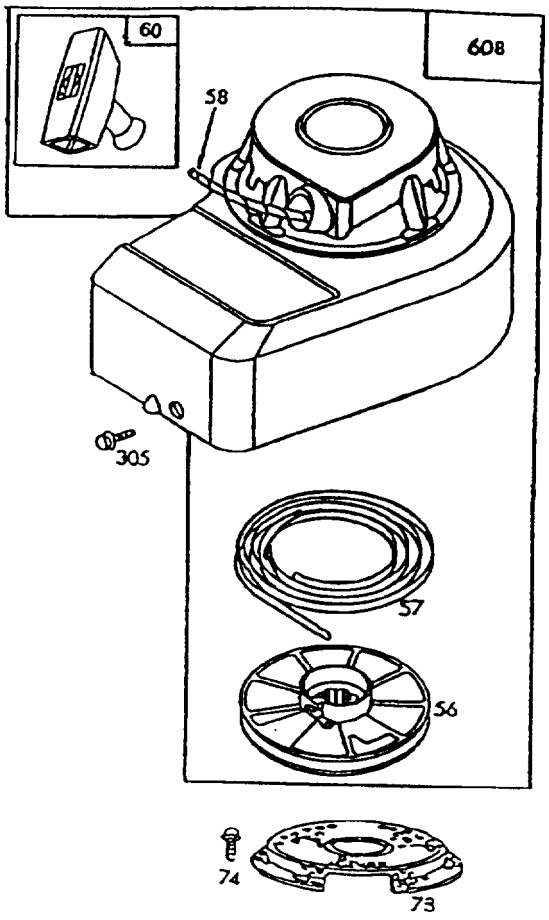

Assemblies include all parts shown in frames.

ENGINE BRIGGS & STRATTON MODEL 95902-3148-01

Ref. No.	Part No.	Description	No. Used
56	280439	Pulley-Rewind Starter	1
57	490179	Spring-Rewind Starter	1
58	280406	Rope-Rewind Starter	1
60	393152	Grip-Starter Rope	1
73	221661	Screen-Rewind Starter	1
74	93758	Screw-Sem	1
305	94153	Screw-Blower Hsg. Mtg.	1
608	494456	Starter Assy.-Rewind	1

TORO PART NUMBER INDEX (Cont.)

Part No.	Description	Pg. No.	Ref. No.	Qty.
3-0655	Screw – Pivot	1	24	4
12-2080	Nut – Shoulder	3	17	2
12-3270	Screw – Thr'd Forming	1	5	7
14-7369	Cover – Discharge	1	3	1
14-7389	Housing – 18'	1	1	1
19-4050	Knob – Handle	3	12	2
25-7740	Knob – Arm	1	9	4
25-8000	Spring Arm Assembly	1	15	4
26-0671	Screw – Blade	2	9	1
27-6201	Wheel & Tire Assembly	1	14	2
27-6211	Wheel & Tire Assembly	1	23	2
27-6230	Bolt – Wheel	1	13	4
33-0390	Washer – Pivot	1	16	4
33-0400	Pivot Arm Assembly	1	25	4
33-2380	Shield – Rear Safety	1	7	1
39-5770	Decal – Danger	1	6	1
40-1940	Washer – Flat	3	6	2
40-1940	Washer – Wheel Bolt	1	11	8
43-1372	Latch – Handle	3	13	2
47-4990	Post	3	14	2
49-7890	Retainer – Blade	2	10	1
50-9921	Handle – Lower	3	10	1
71-1280	Decal – Danger	1	28	1
82-8450	Decal – Danger	1	26	1
85-7060	Decal – Cover	1	4	1
85-7110	Kicker – Front Right	1	19	1
85-7120	Kicker – Front Left	1	20	1
85-7130	Kicker – Rear Right	1	17	1
85-7140	Kicker – Rear Left	1	27	1
85-7150	Deflector – Cover	1	2	1
86-5210	Blade – 18	2	7	1
86-7950	Handle – Upper	3	4	1
86-7960	Bushing – Flange	3	20	2
86-7980	Clamp – Casing	2	12	1
86-7990	Screw – Hex Washer Hd.	2	11	2
86-9671	Guide – Rope	3	1	1
86-9680	Spacer – Wheel	1	12	4
86-9740	Bar – Control	3	3	1
88-0460	Bracket – Cable	2	4	1
92-1779	Decal – Danger	1	29	1
92-2296	Decal – Toro	2	2	1
92-3045	Decal – Deck	1	21	1
92-3075	Accelerator – 18	2	15	1
92-3121	Control – Throttle	3	7	1
92-3128	Cable – Brake	3	21	1
92-3145	Decal – Engine	2	5	1
92-4095	Screw – Handle	3	11	4
92-5412	Stop – Pivot	3	5	1
2210-173	Screw – Deflector	2	14	2
2210-174	Shield – Muffler	2	13	1
2210-316	Stop – Rope	2	3	1
237-136	Grommet	3	15	2
321-8	Screw – Hex Hd. Cap	3	18	2
321-33	Screw – Hex Hd. Cap	3	22	1
322-5	Screw – Hex Hd. Cap	3	16	2
3253-3	Washer – Lock	3	19	2
3253-22	Lockwasher	2	8	1
3256-22	Washer – Flat	1	30	1
3290-378	Tie – Cable	3	8	2
3290-456	Washer – Belleville	1	22	2
3296-5	Nut – Lock	1	10	4
3296-29	Nut – Lock	1	8	4
3296-73	Nut – Lock	3	2	2
3296-74	Nut – Flange Lock	3	9	2
32144-106	Screw – Engine	2	6	3
32144-111	Screw – Pan Hd.	1	18	8

OPTIONAL EQUIPMENT

Side Discharge Kit ..... Model No. 59289
Recycler Bagging Kit ..... Model No. 59279

*Not Illustrated

PRODUCT CHANGES

In an effort to make improvements available to TORO owners as quickly as possible, minor changes are incorporated into Toro's products from time to time that do not become immediately shown in the Parts Catalog. If such a change has been made in your unit, which is not reflected in your manual, see your TORO Distributor or his Authorized TORO Service Dealer for information and part numbers.

COUNTRIES OTHER THAN THE UNITED STATES OR CANADA

Customers who have purchased TORO products exported from the United States or Canada should contact their Toro Distributor (Dealer) to obtain guarantee policies for your country, province or state. If for any reason you are dissatisfied with your Distributor's service or have difficulty obtaining guarantee information, contact the TORO importer. If all other remedies fail, you may contact us at The Toro Company.

MAINTENANCE RECORD

Date								

Compliance with Radio Interference Regulations Certified.
Certifie Conforme au Reglement sur le Brouillage Radioelectrique.

Litho in U.S.A.

MAINTENANCE RECORD

Date								