FORM NO. 3315–911

TORO®

MODEL NO. 59179

PARTS CATALOG

RECYCLER® BAGGING KIT

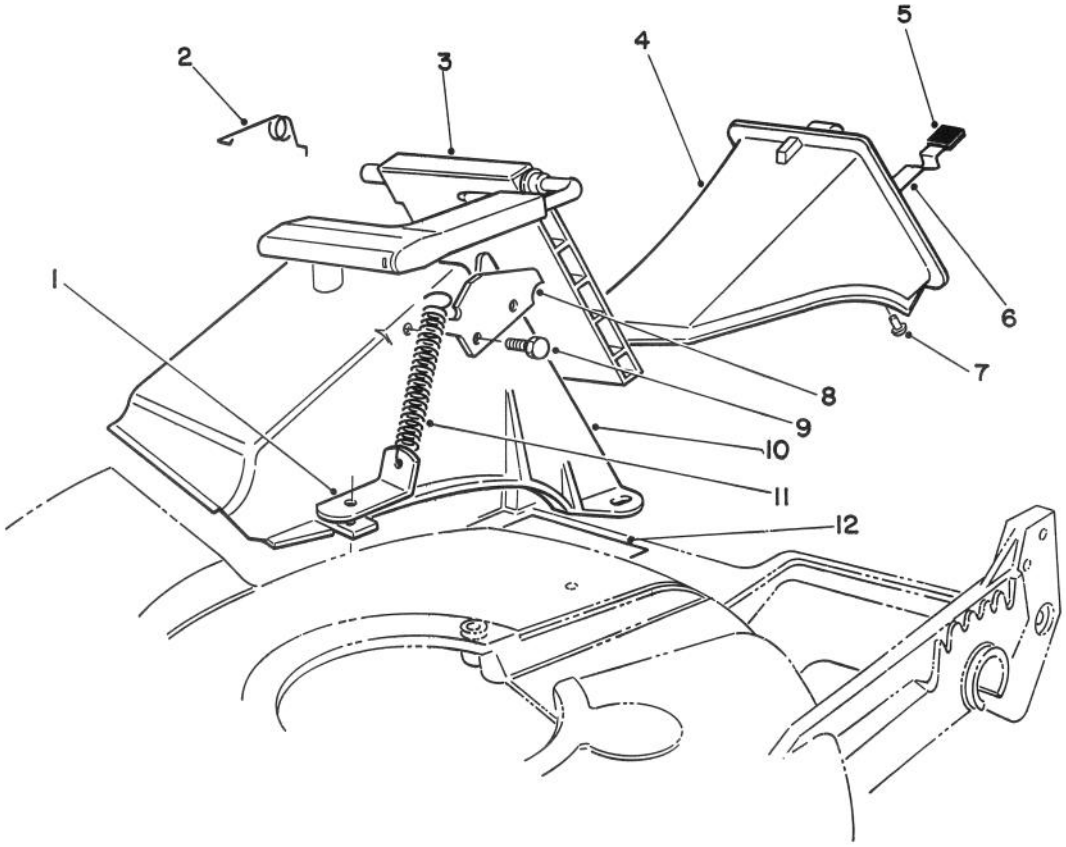

C–1034

DISCHARGE TUNNEL & PLUG ASSEMBLY

Ref. No.	Part No.	Description	No. Used
1	71–9350	Bracket – Spring	1
2	80–3770	Retainer – Door	1
3	77–0200	Discharge Door Assembly	1
4	77–0500	Plug – Assembly (Incl. Ref. #5–7)	1
5	76–4650	Grip – Latch	1
6	76–4640	Latch – Plug	1
7	3295–35	Rivet	1
8	76–4570	Plate – Latch	1
9	46–8090	Screw – Hex Washer Hd. Self Tapping	2
10	82–9150	Tunnel – Discharge	1
11	76–4660	Spring – Door	1
12	82–7960	Decal	1

TPS

© The TORO Company –1992

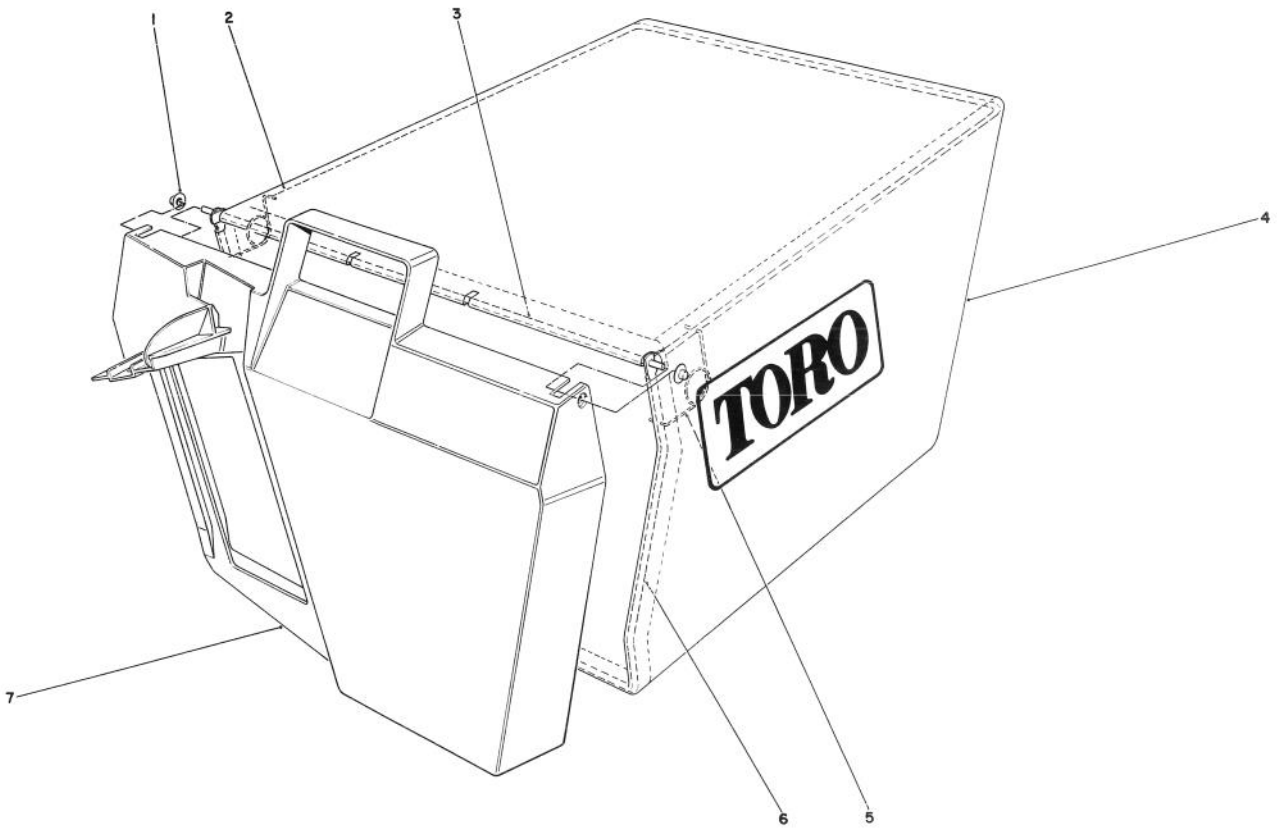

C–0301

BAG ASSEMBLY

Ref. No.	Part No.	Description	No. Used
1	3290–422	Nut – Push	2
2	42–4030	Bag Frame – Upper	1
3	33–4820	Hing – Bag Door	1
4	8–2759	Bag – Grass	1

Ref. No.	Part No.	Description	No. Used
5	36–6910	Spring	2
6	43–0030	Frame – Bag	1
7	36–1332	Door – Grass Bag	1