FORM NO. 3315–985

TORO®

MODEL NO. 20436WF–3900001 & UP

PARTS CATALOG

21" RECYCLER®
Mower

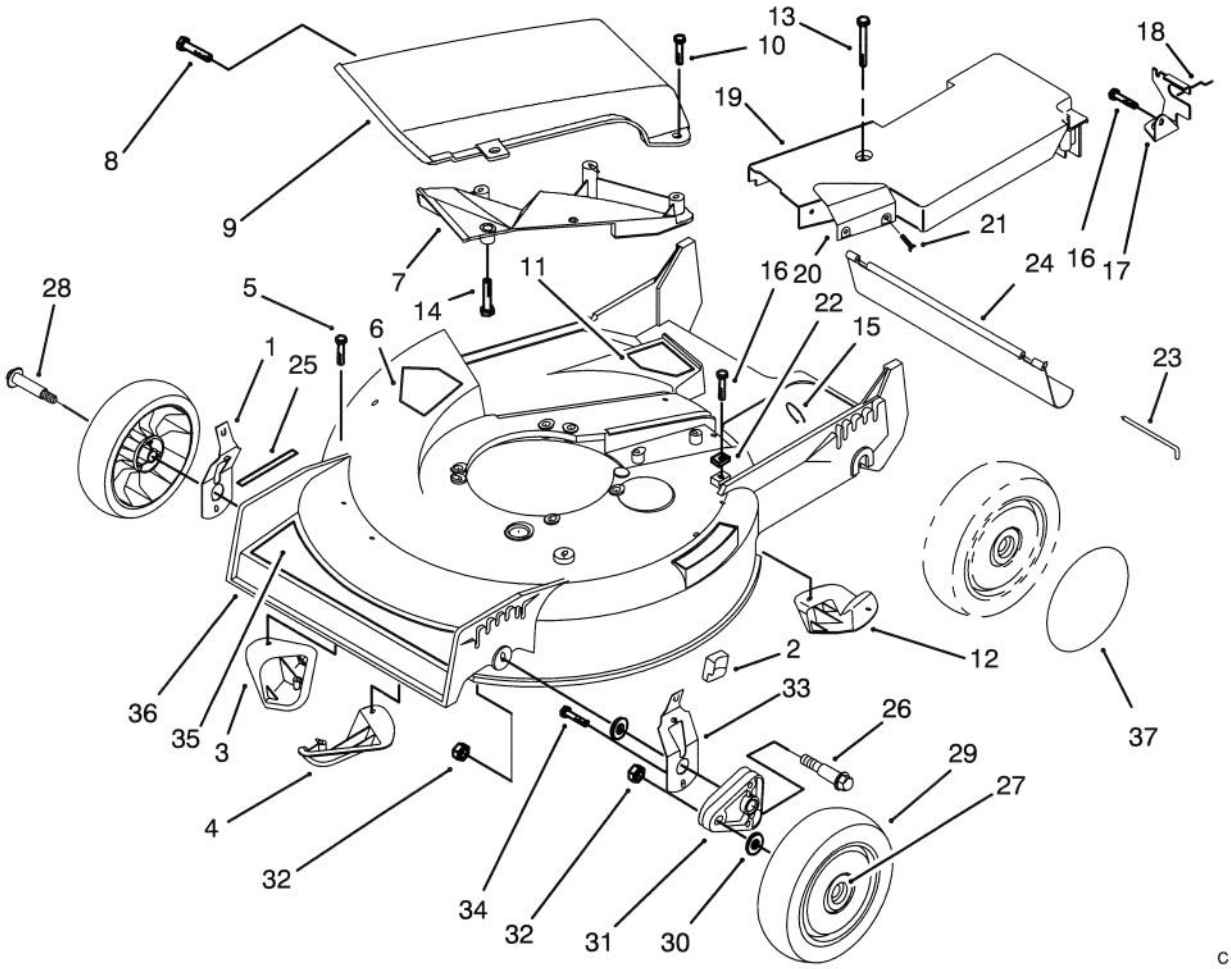

C–1396

HOUSING ASSEMBLY

Ref. No.	Part No.	Description	No. Used
1	71–0561	Spring Arm Ass'y – R.H.	1
2	25–7740	Knob – Spring Arm	2
3	92–1720	Plate – Kicker Rt. Front	1
4	92–1730	Plate – Kicker Rt. Rear	1
5	32144–111	Screw – Pan Hd.	6
6	56–6270	Decal – Danger	1
7		Deflector – Recycler	1
8	46–6810	Screw – Hex Washer Hd. Thread Forming	1
9	14–9979	Cover Assembly (Incl. Ref. #7 & 14)	1
10	46–6811	Screw w/Washer	3
11	92–1703	Decal – Danger	1
12	92–1750	Plate – Kicker Left Rear	1
13	37–7260	Screw – Special	2
14		Screw	5
15	3290–378	Tie – Cable	1

Ref. No.	Part No.	Description	No. Used
16	32144–70	Screw – Hex Washer Hd. Thread Forming	2
17	82–5680	Bracket – Traction Adj.	1
18	46–7030	Retainer – Cable	1
19	52–7406	Belt Cover Assembly (Incl. Ref. #20 & 21)	1
20	77–0280	Shield – Heat	1
21	3295–35	Rivet	2
22	62–3720	Clamp – Cable	1
23	33–3208	Rod – Shield	1
24	44–0580	Shield – Rear	1
25	92–2279	Decal – H.O.C.	4
26	66–0560	Screw – Pivot	2
27	27–6250	Bushing	4
28	27–6232	Bolt – Wheel	2
29	14–9989	Wheel & Tire Assembly (Incl. Ref. #27)	2

® The Toro Company – 1993
All Rights Reserved

TPS

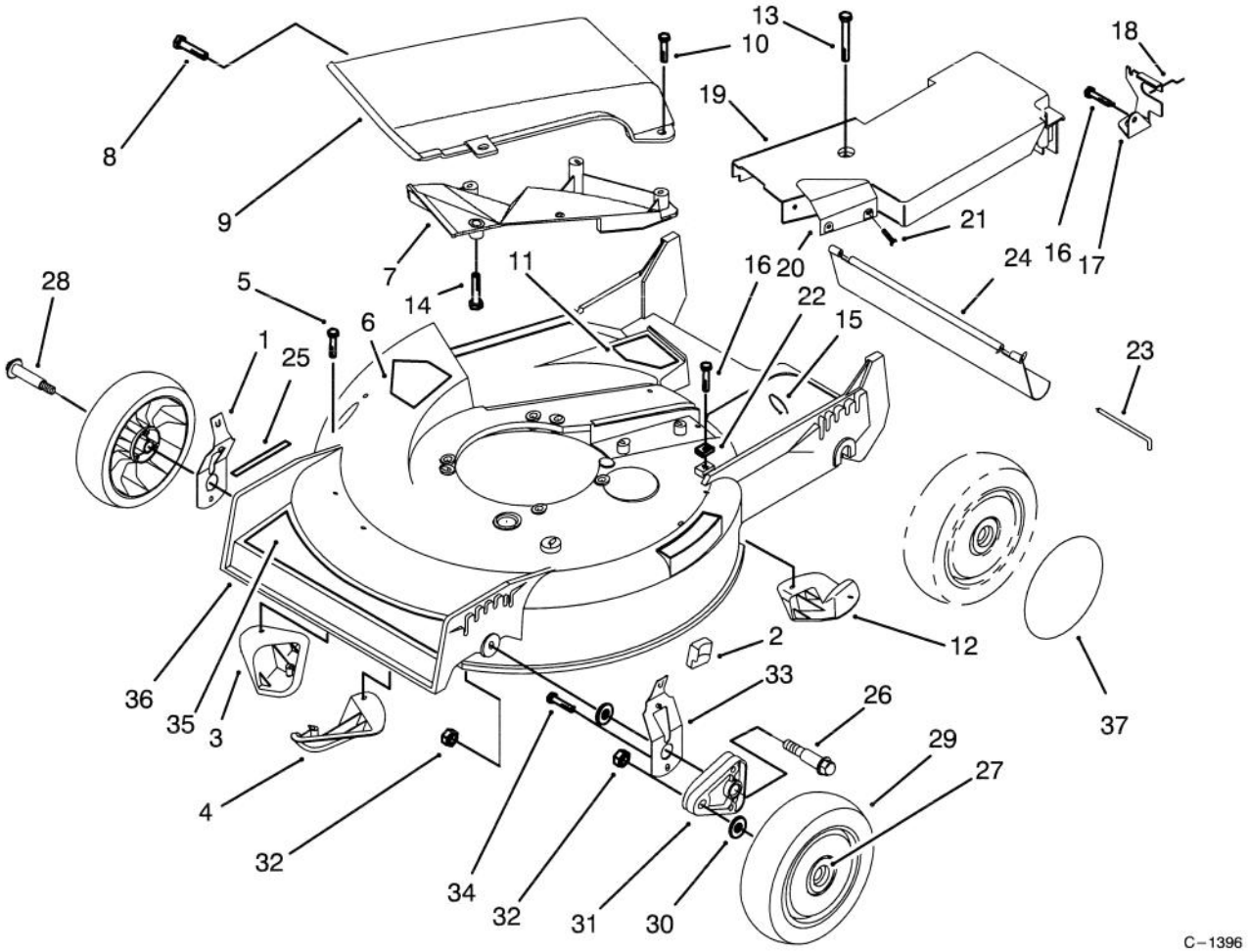

C–1396

HOUSING ASSEMBLY (CONTINUED)

Ref. No.	Part No.	Description	No. Used
30	40–1940	Washer – Wheel	4
31	66–0580–03	Arm – Pivot	2
32	3296–6	Nut – Lock	4
33	71–0571	Spring Arm Ass'y – L.H.	1
34	32144–85	Screw – Hex Hd. Cap	2
35	92–2281	Decal – Deck	1

Ref. No.	Part No.	Description	No. Used
36	16–2119	Housing Assembly (Incl. Ref. # 3–6, 8, 12, 16, & 25, pg. 1–2) (Incl. Ref. #6, & 7 pg. 3)	1
37	91–2253	Cover – Wheel	1

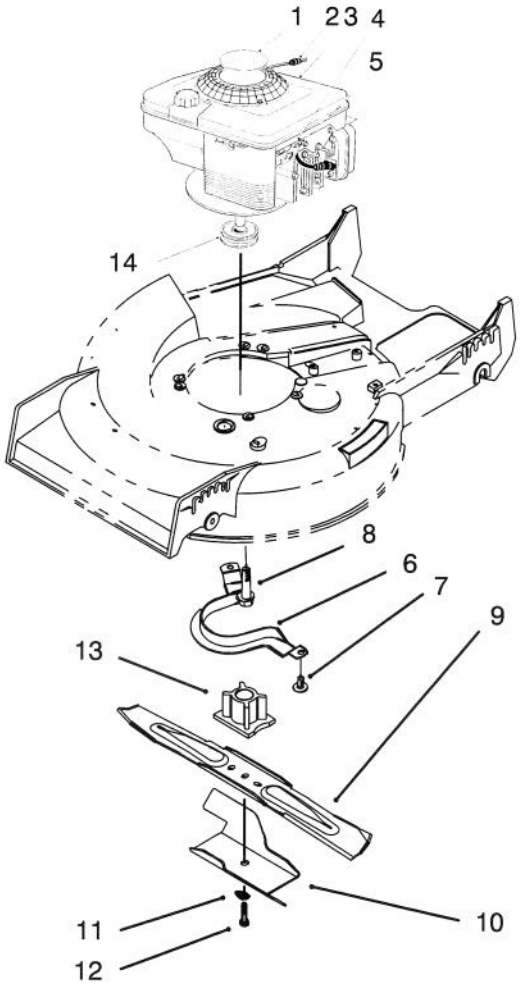

C–1393

ENGINE ASSEMBLY

Ref. No.	Part No.	Description	No. Used
1	92–2282	Decal – Engine	1
2	2210–316	Stop – Rope	1
3		Engine	1
†4	2210–249	Clamp – Casing	1
†5	2210–313	Screw – Clamp	1
6	66–0570	Guide – Belt	1
7	32144–70	Screw – Thread Forming	2

Ref. No.	Part No.	Description	No. Used
8	32144–102	Screw – Thread Forming	3
9	14–9419	Blade – 21"	1
10	92–1599	Stiffener – Blade	1
11	3253–22	Washer – Lock	1
12	26–0670	Screw – Blade	1
13	62–7540	Retainer – Blade	1
14	62–7550	Pulley – Driver	1

†Supplied with Engine

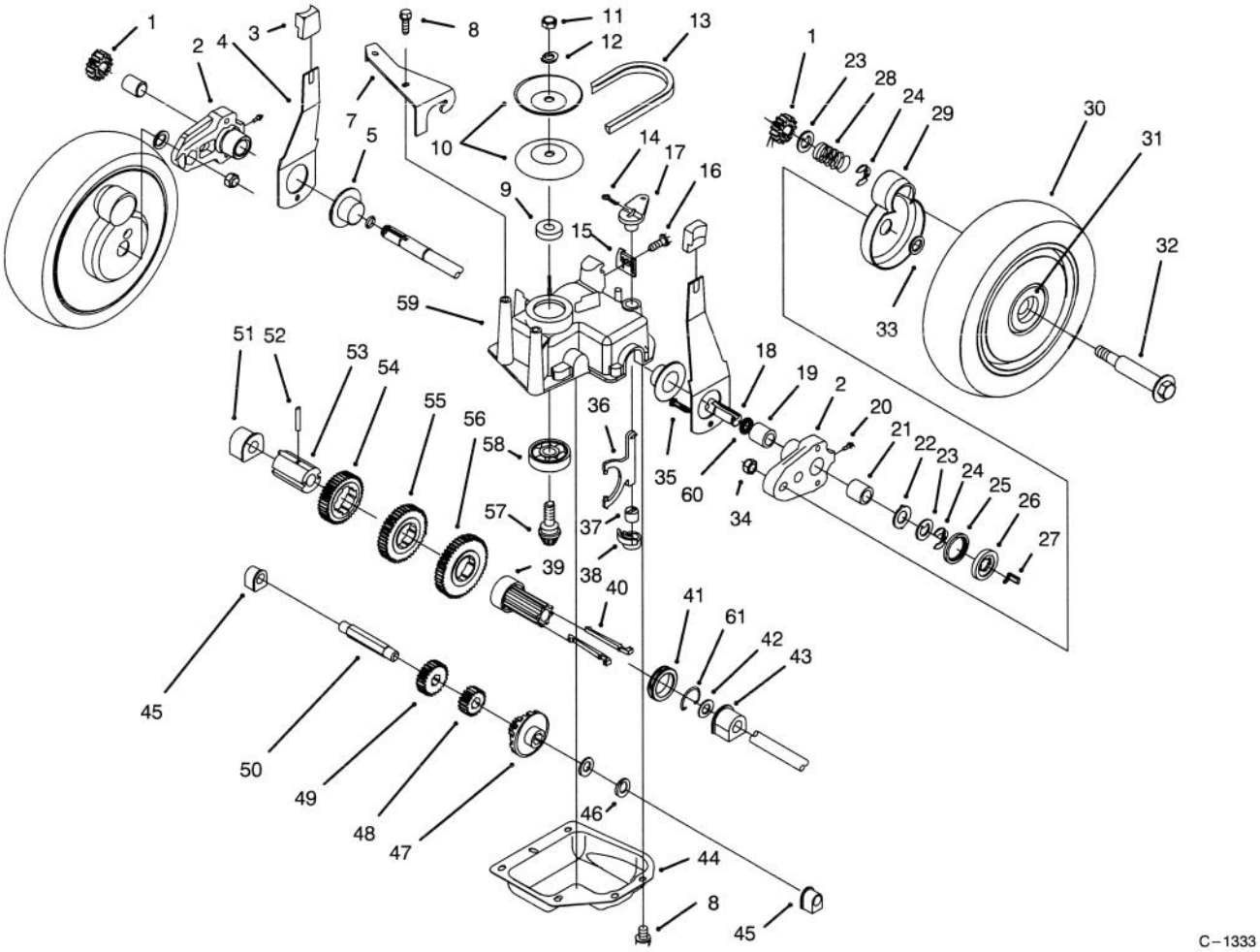

GEAR CASE ASSEMBLY

Ref. No.	Part No.	Description	No. Used
1	65–4750	Pinion	2
2	63–8701–03	Pivot Arm Assembly (Incl. Ref # 19, 20, & 21)	2
3	25–7740	Knob – Arm	2
4	63–8721	Spring Arm Assembly	2
5	42–3520	End Cap	2
7	62–4320	Bracket – Belt Guide	1
8	49–2040	Screw – Self Tapping	8
9	62–6660	Spacer	1
10	60–8840	Pulley – Half	2
11	3296–5	Locknut	1
12	3256–24	Washer – Flat	1
13	62–3900	V–Belt	1
14	3272–10	Pin – Cotter	1
15	82–8780	Cable – Retainer	1
16	32144–70	Screw – Thread Forming	1
17	60–8821	Lever – Shift	1
18	65–4770	Shaft – Output	1
19	70–9760	Bushing	2
20	302–56	Fitting – Grease	2
21	48–2060	Needle Bearing	2
22	65–4730	Thrust Washer	2
23	65–4740	Thrust Washer	4
24	65–2720	Ring – Retaining	4
25	65–4710	Ring – Friction	2

Ref. No.	Part No.	Description	No. Used
26	65–4760	Washer – Clutch	2
27	66–6050	Key – Rocker L.H.	1
*	66–6040	Key – Rocker R.H.	1
28	65–4720	Spring	2
29	74–1660	Cover – Wheel	2
30	16–0029	Wheel – Tire & Gear Ass'y (Incl. Ref. # 31)	2
31	27–6250	Bushing – Wheel	4
32	27–6232	Wheel Bolt	2
33	74–1670	Spacer – Wheel Cover	2
34	3296–6	Locknut	2
35	32144–85	Screw	2
36	60–8870	Yoke – Shift	1
37	29–9570	Bushing – Yoke	1
38	60–8810	Retainer – Shift Fork	1
39	76–0780	Sleeve – Shift Key	1
40	76–0760	Key – Shift	2
41	76–0770	Collar – Shift	1
42	36–4780	Washer – Thrust	1
43	60–8770	Bushing – Output Shaft	1
44	60–8730	Cover – Gear Case	1
45	60–8750	Bushing – Int. Shaft	2
46	36–4791	Washer – Thrust	2
47	55–3760	Gear – Pinion 15 Tooth	1
48	55–3780	Gear – Pinion 20 Tooth	1

*Not Illustrated

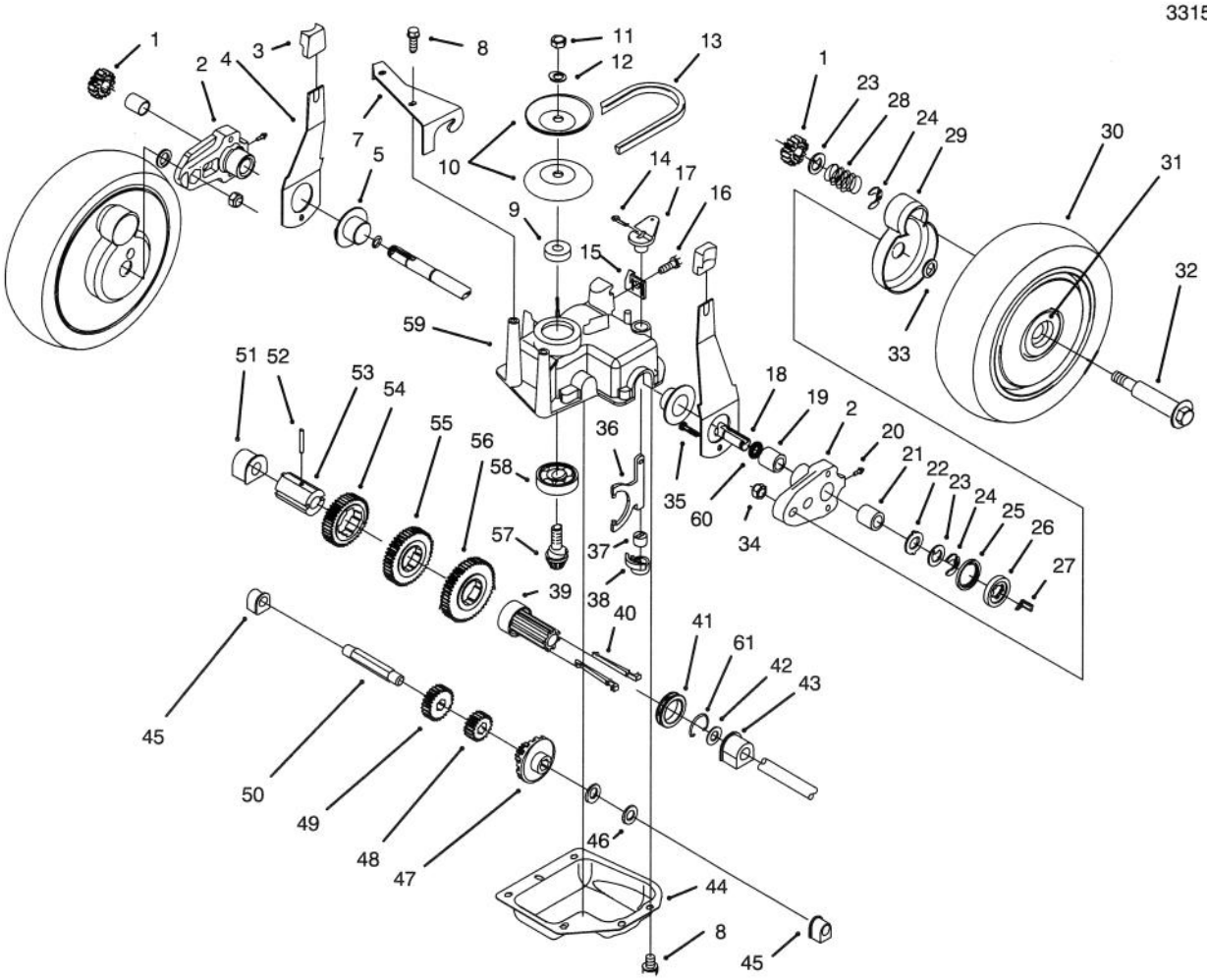

C–1333

GEAR CASE ASSEMBLY (CONTINUED)

Ref. No.	Part No.	Description	No. Used
49	55–3800	Gear – Pinion	1
50	60–8800	Shaft – Intermediate	1
51	60–8850	Bushing – Output Shaft	1
52	32121–120	Pin – Coil	1
53	60–8790	Sleeve – Gear	1
54	55–3810	Gear – 39 Tooth 3rd Gear	1
55	55–3790	Gear – 44 Tooth 2nd Gear	1

Ref. No.	Part No.	Description	No. Used
56	55–3770	Gear – 49 Tooth 1st Gear	1
57	60–8890	Pinion – Bevel	1
58	38–7820	Bearing – Ball	1
59	60–8710	Gear Case – Upper	1
60	237–153	O–Ring	2
61	65–5250	Clip – Spring	1
*	62–6673	Gear Case Assembly	1

*Not Illustrated

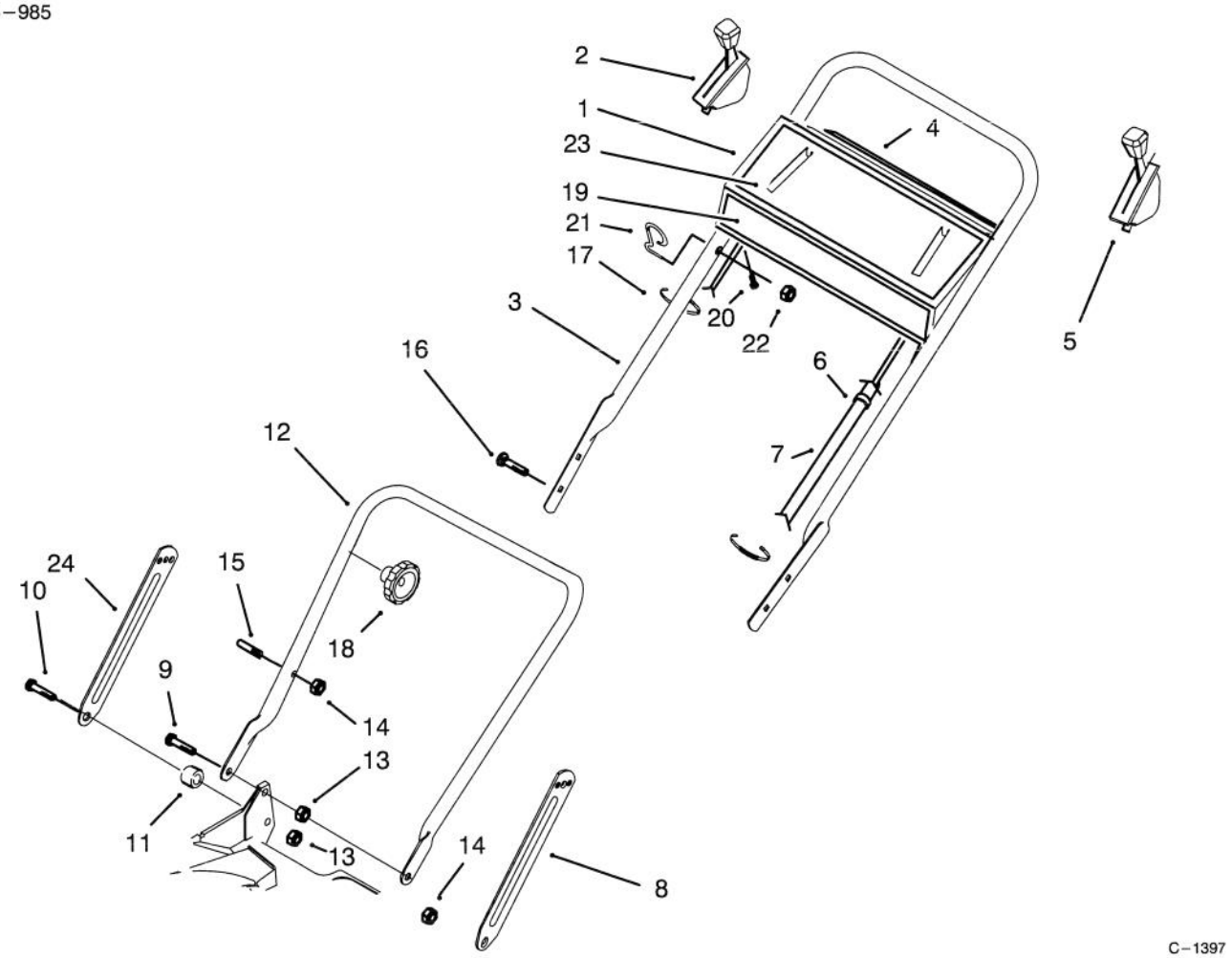

C–1397

HANDLE ASSEMBLY

Ref. No.	Part No.	Description	No. Used
1	16–1629	Panel – Control (Incl. Ref. #4, 19, & 23)	1
2	76–2712	Control – Ground Speed (Bend Type #1) (Sheath Lg. 41 3/4") (Wire Lg. 2 1/2")	1
3	92–2278	Handle – Upper	1
4	66–1790	Decal – Danger	1
5	74–3894	Control – Throttle (Bend Type #3) (Sheath Lg. 60") (Wire Lg. 1 3/4")	1
6	2412–50	Clip Convoluted Tubing	4
7	46–6440	Cover – Control Cables	1
8	84–8361	Latch – Handle L.H.	1
9	27–7211	Screw – Shoulder	2
10	27–7210	Screw – Shoulder	2
11	3–3287	Spacer	2
12	82–5531–05	Lower Handle Assembly	1
13	3296–72	Nut – Lock	3
14	3296–47	Nut – Lock	3
†15	49–2750	Pin – Handle	2
16	92–2260	Screw – Handle	2
17	3290–378	Tie – Cable	2
18	19–4050	Knob – Handle Release	2
19	92–3146	Decal – Front Panel	1
20	32144–115	Screw – Self Tap Slotted	5
21	86–9671	Guide – Rope	1
22	3296–73	Nut – Lock	1
23	92–2290	Decal – Instruction	1
24	84–8401	Latch – Handle R.H.	1

†Service Replacement Part

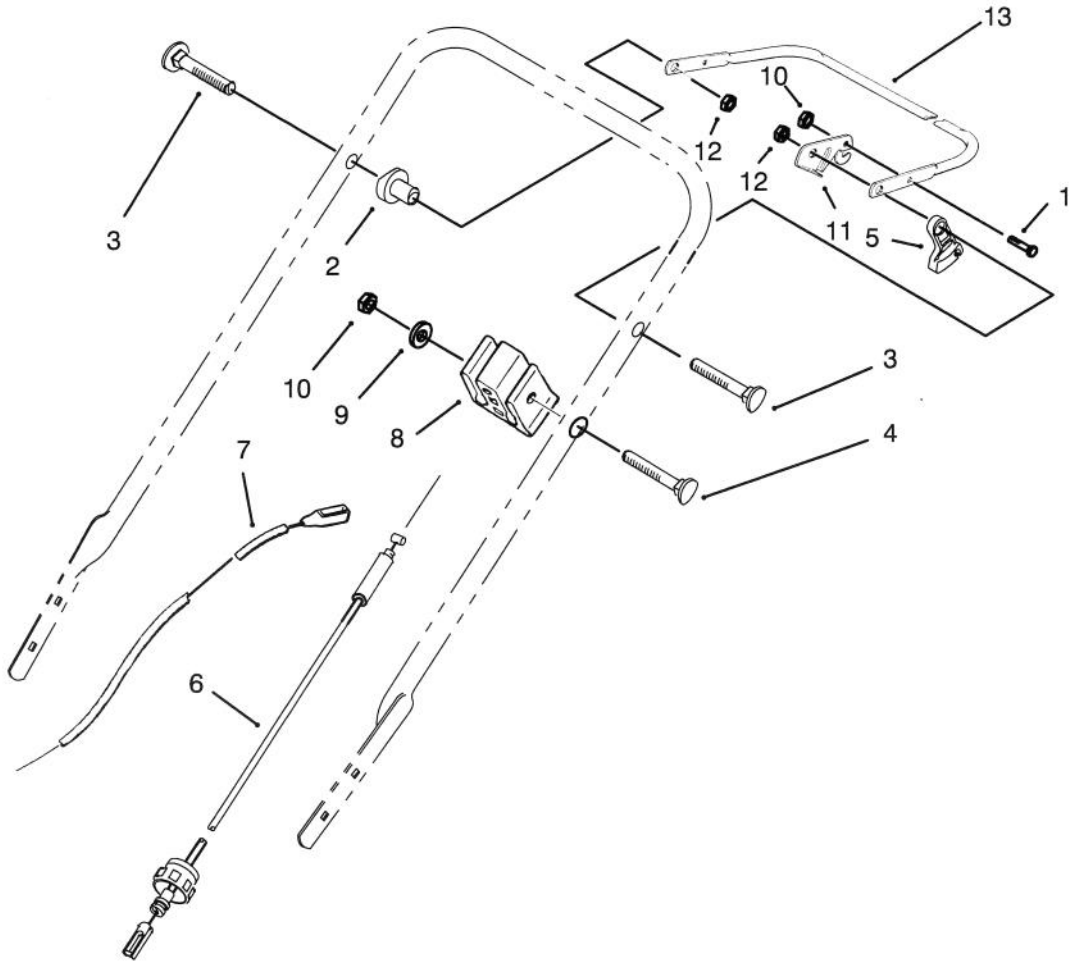

C–1395

TRACTION CONTROL ASSEMBLY

Ref. No.	Part No.	Description	No. Used
1	321–39	Screw – Hex Hd. Cap	1
2	49–1630	Support – Spacer	2
3	92–2260	Screw – Handle	2
4	92–2269	Screw – Handle	1
5	46–5520	Lever – Traction	1
6	46–5481	Cable – Traction	1
7	76–4330	Cable – Brake	1

Ref. No.	Part No.	Description	No. Used
8	46–6980	Support – Cable	1
9	3256–1	Washer – Flat	1
10	3296–73	Nut – Lock	2
11	66–5351	Lever – Control	1
12	3296–74	Nut – Lock	2
13	71–3080	Bar – Control	1

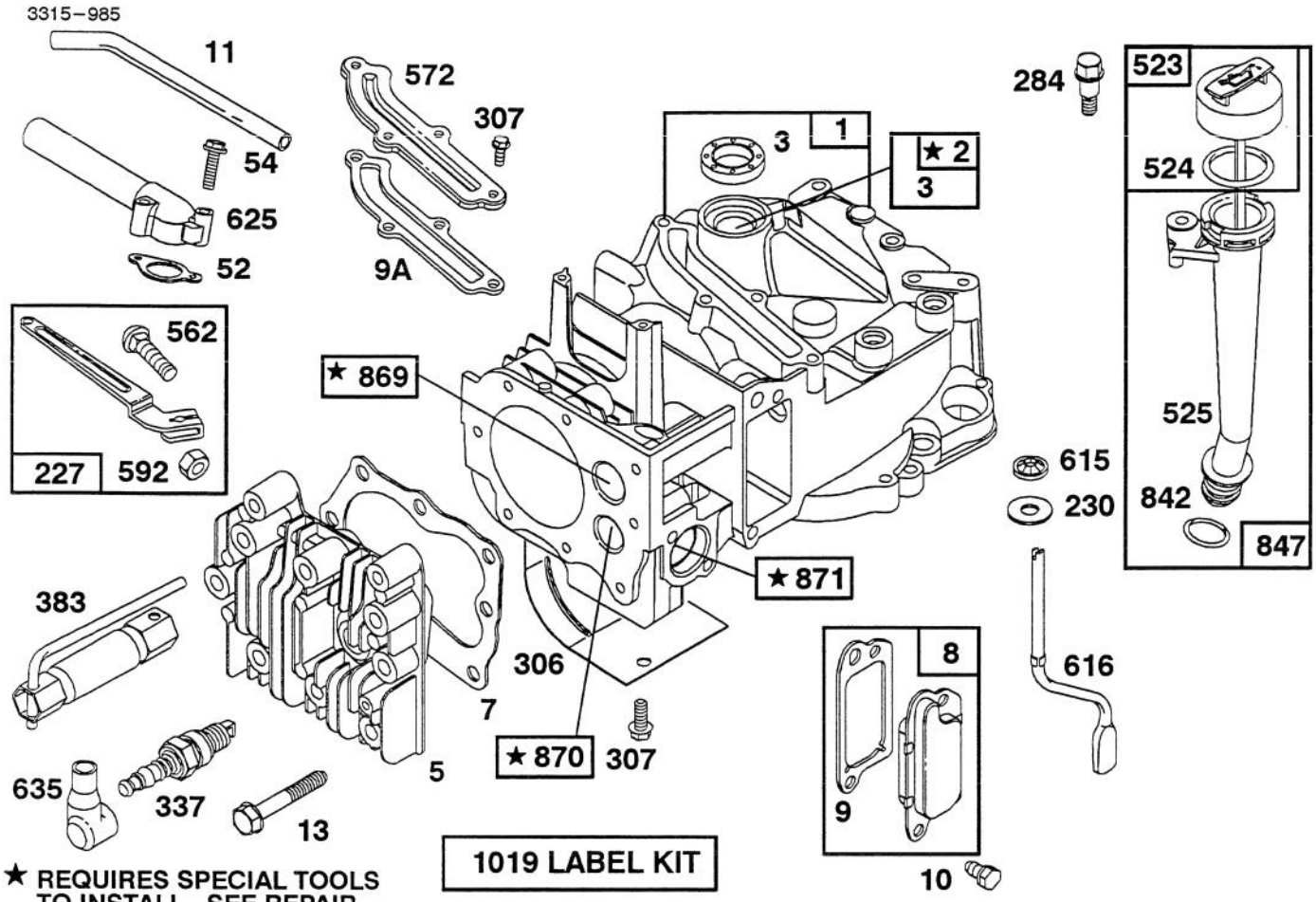

★ REQUIRES SPECIAL TOOLS TO INSTALL. SEE REPAIR INSTRUCTION MANUAL.

Assemblies include all parts shown in frames.

ENGINE BRIGGS & STRATTON MODEL 124702-3115-01

Ref. No.	Part No.	Description	No. Used
1	493260	Cylinder Assembly	1
2	293708	Bushing–Cylinder	1
★3	299819	Seal–Oil	1
5	213861	Head–Cylinder	1
★7	272200	Gasket–Cylinder Head	1
8	495786	Breather–Valve Chamber	1
★9	272481	Gasket–Valve Cover	1
★9A	272238	Gasket–Baffle Plate	1
10	94650	Screw–Breather Mtg.	1
11	231685	Tube–Breather	1
13	94547	Screw–Cylinder Head	1
★52	272199	Gasket–Intake Elbow	1
54	94526	Screw–Intake Elbow Mtg.	1
227	492349	Lever Assembly–Gov.	1
230	67072	Washer–Gov. Crank	1
284	94511	Screw–Hex. Head	1
306	224324	Shield–Cylinder	1
307	94515	Screw–Hex. Head	1
337	802592	Plug–Spark	1
383	89838	Wrench–Spark Plug	1

Ref. No.	Part No.	Description	No. Used
523	495264	Cap With Dipstick–Oil Filler	1
★524	280393	Seal–Filler Tube	1
525	495265	Tube–Oil Filler	1
562	92613	Bolt–Governor Lever	1
572	224328	Baffle–Cylinder	1
592	231082	Nut–Hex.	1
615	94474	Pushnut (Governor Crank)	1
616	262578	Crank–Governor	1
625	492717	Tube–Fuel Intake	1
635	66538	Elbow–Spark Plug	1
★842	280966	Seal–O-Ring	1
847	495263	Oil Fill Tube and Dipstick Assy.	1
869	213512	Seat–Intake Valve	1
870	213513	Seat–Exhaust Valve	1
871	262001	Guide–Exhaust Valve **Note:** 63709 Guide–Intake Valve	1
1019	494256	Label Kit	1

★ Included in Gasket Set–Part No. 493263.

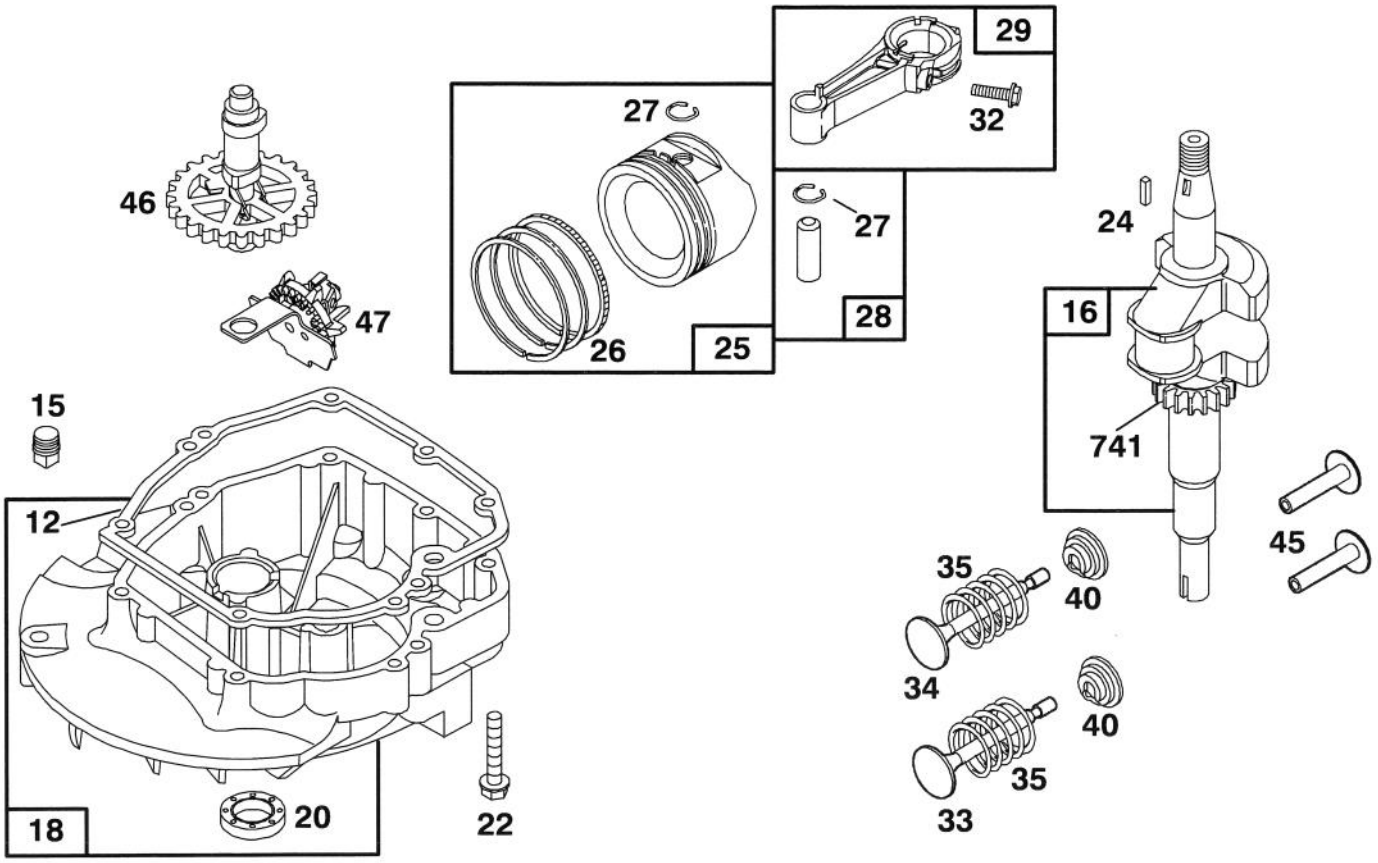

Assemblies include all parts shown in frames.

ENGINE BRIGGS & STRATTON MODEL 124702-3115-01

Ref. No.	Part No.	Description	No. Used
★12	272198	Gasket–Crankcase	1
15	94720	Plug–Oil Drain	1
16	494546	Crankshaft	
		Note: Order 94388 For Timing Gear Key.	1
18	493279	Sump–Engine	1
★20	399781	Seal–Oil	1
22	94220	Screw–Sump Mounting Sem **Note:** 94612 Screw–Hex. Head (One (1) Used in Hole Nearest Breather.)	1
24	222698	Key–Flywheel	1
25	493262	Piston Assy. (Standard)	1
	493385	Piston Assy. (.010" O.S.)	1
	493386	Piston Assy. (.020" O.S.)	1
	493387	Piston Assy. (.030" O.S.)	1
26	493261	Ring Set–Piston (Standard)	1
	493388	Ring Set–Piston (.010" O.S.)	1
	493389	Ring Set–Piston (.020" O.S.)	1
	493390	Ring Set–Piston (.030" O.S.)	1

Ref. No.	Part No.	Description	No. Used
27	26026	Lock–Piston Pin	1
28	298909	Pin Assembly–Piston (Standard)	1
	298908	Pin Assembly–Piston (.005" O.S.)	1
29	490566	Rod Assembly– Connecting **Note:** For Connecting Rod With .020" Undersize Crankpin Bearing–Order No. 490743	1
32	94405	Screw–Connecting Rod	1
33	262651	Valve–Exhaust	1
34	262652	Valve–Intake	1
35	262224	Spring–Valve	1
40	93312	Retainer–Valve Spring	1
45	262204	Tappet–Valve	1
46	492830	Gear–Cam	1
47	493737	Oil Slinger Gear and Bracket	1
741	262598	Gear–Timing	1

★ Included in Gasket Set–Part No. 493263.

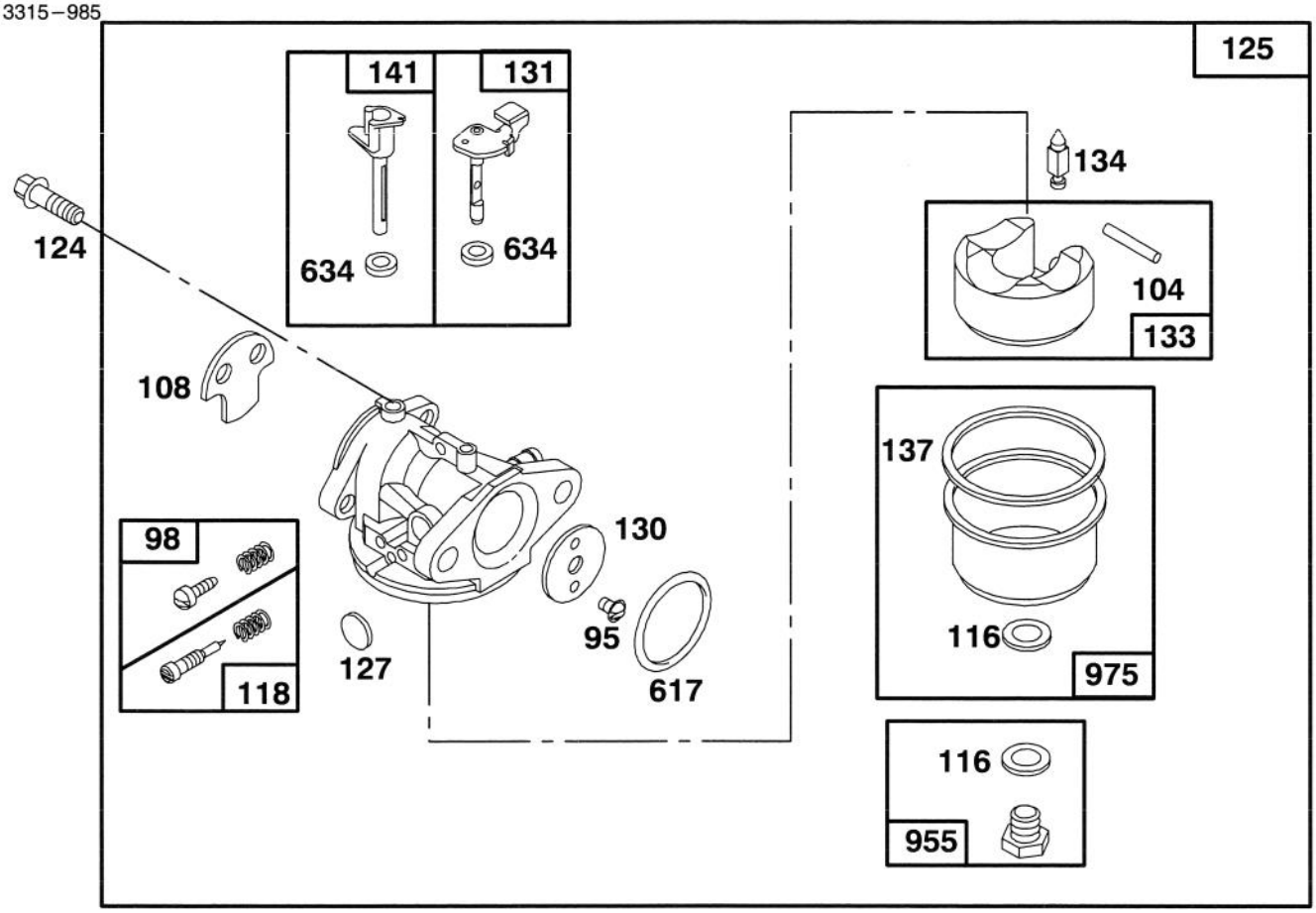

Assemblies include all parts shown in frames.

ENGINE BRIGGS & STRATTON MODEL 124702-3115-01

Ref. No.	Part No.	Description	No. Used
95	94098	Screw–Throttle Valve Mtg.	1
98	398185	Screw–Idle Adjustment	1
●104	231371	Pin–Float Hinge	1
108	223471	Valve–Choke	1
●◆116		Gasket–Sealing (Sold in Kit Only).	1
●118	493765	Valve and Spring– Needle	1
124	94525	Screw–Carburetor Mtg.	1
125	494217	Carburetor Assembly	1
●127		Plug–Welch (Sold in Kit Only).	1
130	223470	Valve–Throttle	1

Ref. No.	Part No.	Description	No. Used
131	493267	Shaft and Lever–Throttle	1
133	398187	Float Assy.–Carburetor	1
●134	398188	Valve–Inlet (Includes Seat)	1
●◆137		Gasket–Bowl (Sold in Kit Only).	1
141	494218	Shaft–Choke	1
●◆617	270344	Seal–Fuel Intake Tube	1
●◆634		Washer–Shaft (Sold in Kit Only).	1
955	493869	Screw–Bowl Mtg.	1
975	493640	Bowl Assy.–Carburetor	1

● Included in Carburetor Overhaul Kit–Part No. 493762.
◆ Included in Carburetor Gasket Set–Part No. 490937.

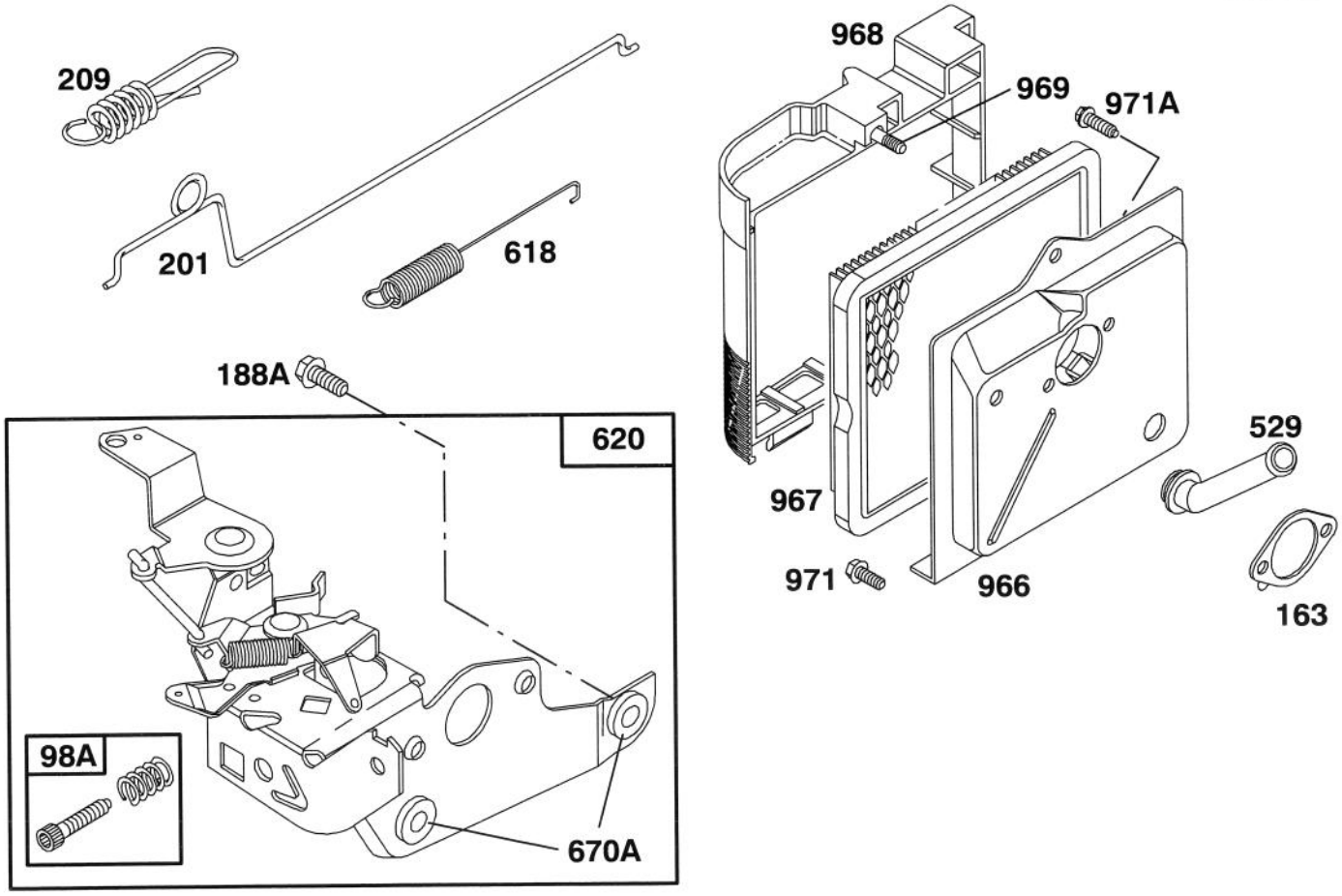

Assemblies include all parts shown in frames.

ENGINE BRIGGS & STRATTON MODEL 124702-3115-01

Ref. No.	Part No.	Description	No. Used
98A	493280	Screw Assy.–Speed Adjust	1
★163	272296	Gasket–Air Cleaner	1
188A	94644	Screw–Hex. Head	1
201	262579	Link–Governor	1
209	262661	Spring–Governor	1
529	280943	Grommet–Breather	1
618	262749	Spring–Choke Return	1
620	493894	Bracket Assembly–Carburetor Control	1

Ref. No.	Part No.	Description	No. Used
670A	493823	Spacer–Carburetor Bracket	1
966	492363	Base–Air Cleaner	1
967	491588	Filter–Air	1
968	280937	Cover–Air Cleaner	1
969	94120	Screw–Cover Mtg.	1
971	94269	Screw–Air Cleaner	1
971A	94121	Screw–Base to Carb.	

★ Included in Gasket Set–Part No. 493263.

3315–985

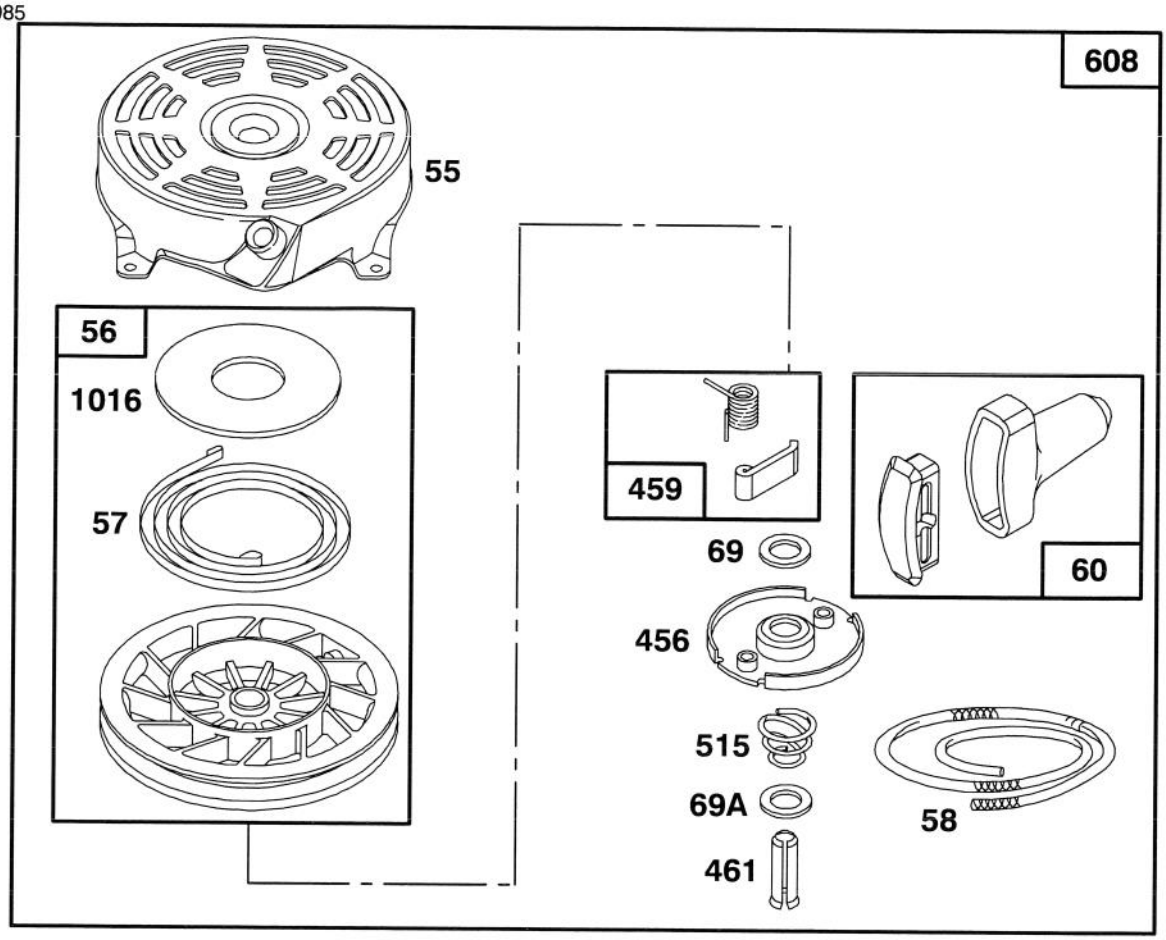

Assemblies include all parts shown in frames.

ENGINE BRIGGS & STRATTON MODEL 124702-3115-01

Ref. No.	Part No.	Description	No. Used
55	492831	Housing–Rewind Starter	1
56	492832	Pulley–Rewind Starter	1
57	262594	Spring–Rewind Starter	1
58	280399	Rope–Rewind Starter	1
60	393152	Handle–Rewind Starter	1
69	280973	Washer–Rewind Starter	1
69A	224322	Washer–Rewind Starter	1
456	224321	Retainer–Rewind Starter	1

Ref. No.	Part No.	Description	No. Used
459	492833	Pawl–Starter	1
461	262626	Pin–Starter	1
515	262625	Spring–Torsion	1
608	493295	Starter Assy.–Rewind	
		Includes:	
		94128 Screw–Hex. Head	
		92987 Nut–Hex.	1
1016	224278	Cover–Rewind Starter	1

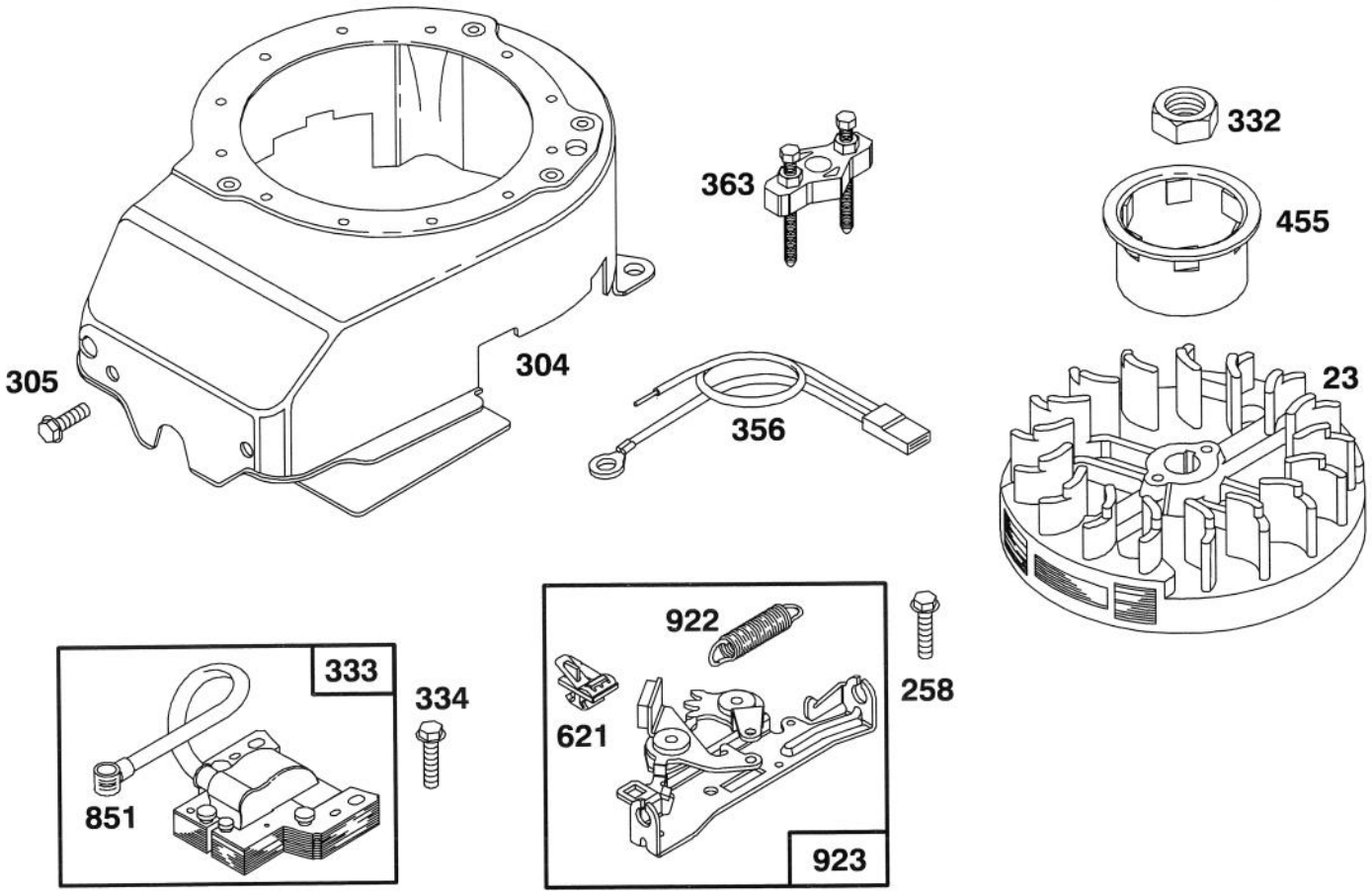

Assemblies include all parts shown in frames.

ENGINE BRIGGS & STRATTON MODEL 124702-3115-01

Ref. No.	Part No.	Description	No. Used
23	492177	Flywheel–Magneto	1
258	94512	Screw–Hex. Head	1
304	493293	Housing–Blower	1
305	94729	Screw–Hex. Head Sem	1
332	92284	Nut–Flywheel	1
333	802574	Armature–Magneto	1
334	94731	Screw–Armature Mtg.	1

Ref. No.	Part No.	Description	No. Used
356	398808	Wire–Ground	1
363	19069	Puller–Flywheel	1
455	224250	Cup–Starter	1
621	396847	Switch–Stop	1
851	221798	Terminal–Ignition Cable	1
922	262640	Spring–Brake	1
923	492918	Brake Assembly	1

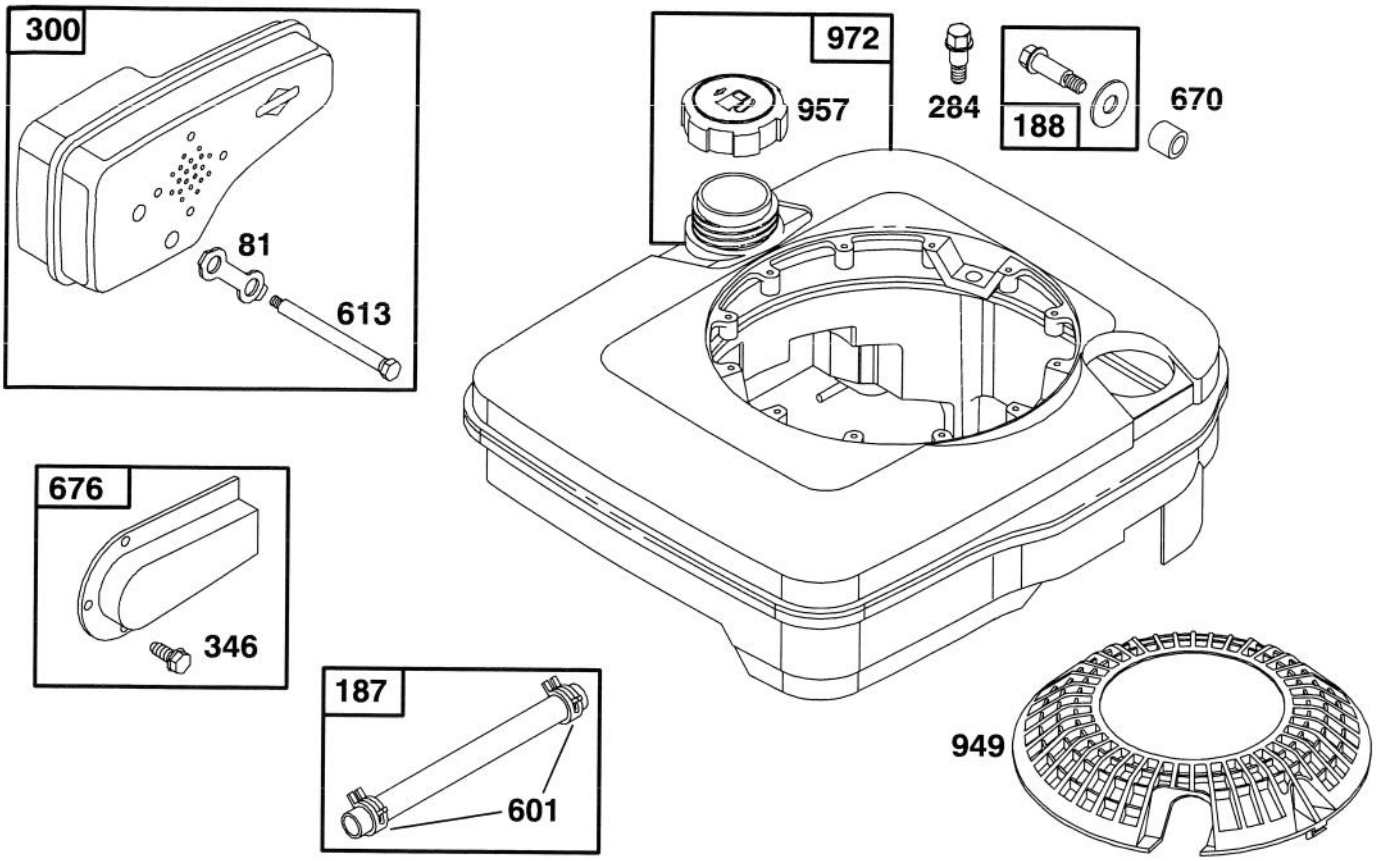

Assemblies include all parts shown in frames.

ENGINE BRIGGS & STRATTON MODEL 124702-3115-01

Ref. No.	Part No.	Description	No. Used
81	223664	Lock–Muffler Screw	1
187	492790	Hose–Fuel (Cut To Suit)	1
188	398540	Screw–Tank Mounting (Includes Washer)	1
284	94511	Screw–Hex. Head	1
300	490547	Muffler–Exhaust	1
346	93705	Screw–Hex. Head	1

Ref. No.	Part No.	Description	No. Used
601	93807	Clamp–Hose	1
613	94231	Screw–Muffler Mtg.	1
670	280512	Spacer–Fuel Tank	1
676	493871	Deflector–Muffler	1
949	281136	Guard–Finger	1
957	397974	Cap Assy.–Fuel	1
972	494358	Tank Assembly–Fuel	1

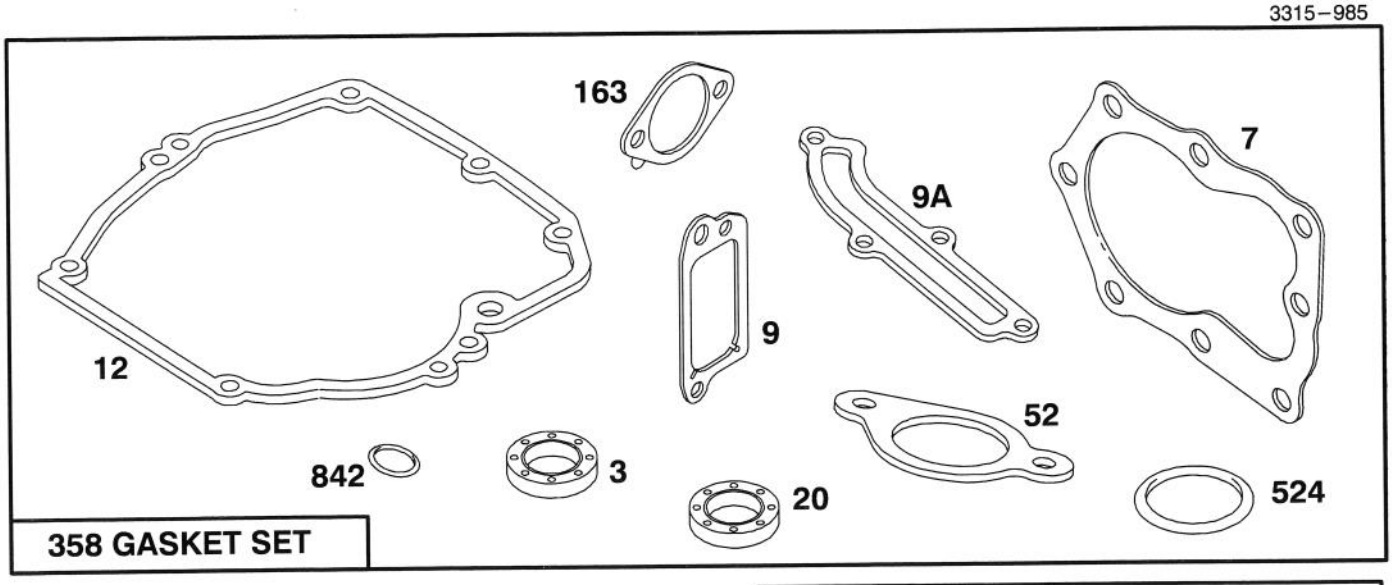

358 GASKET SET

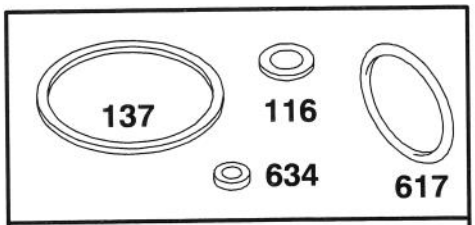

977 CARBURETOR GASKET SET

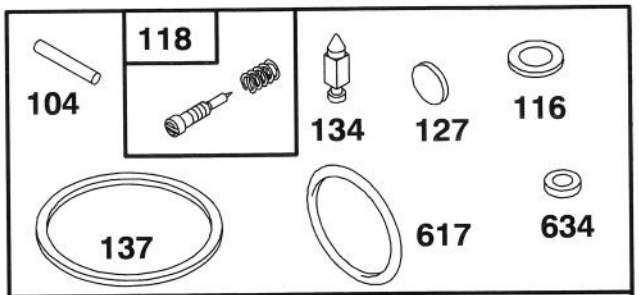

121 CARBURETOR OVERHAUL KIT

Assemblies include all parts shown in frames.

ENGINE BRIGGS & STRATTON MODEL 124702-3115-01

Ref. No.	Part No.	Description	No. Used
★3	299819	Seal–Oil	1
★7	272200	Gasket–Cylinder Hd.	1
★9	272481	Gasket–Valve Cover	1
★9A	272238	Gasket–Baffle Plate	1
★12	272198	Gasket–Crankcase	1
★20	399781	Seal–Oil	1
★52	272199	Gasket–Intake Elbow	1
●104	231371	Pin–Float Hinge	1
●◆116		Gasket–Sealing (Sold in Kit Only).	1
●118	493765	Valve and Spring–Needle	1
121	493762	Carburetor Overhaul Kit	1
●127		Plug–Welch (Sold in Kit Only).	1

Ref. No.	Part No.	Description	No. Used
●134	398188	Valve–Inlet (Includes Seat)	1
●◆137		Gasket–Bowl (Sold in Kit Only).	1
★163	272296	Gasket–Air Cleaner	1
358	493263	Gasket Set	1
1★524	280393	Seal–Filler Tube	1
●◆617	270344	Seal–Fuel Intake Tube	1
●◆634		Washer–Shaft (Sold in Kit Only).	1
★842	280966	Seal–O-Ring	1
977	490937	Gasket Set–Carburetor	1

● Included in Carburetor Overhaul Kit–Part No. 493762.
◆ Included in Carburetor Gasket Set–Part No. 490937.
★ Included in Gasket Set–Part No. 493263.

TORO PART NUMBER INDEX (Cont.)

Part No.	Description	Pg. No.	Ref. No.	Qty.
3-3287	Spacer	6	11	2
14-9419	Blade - 21	3	9	1
14-9979	Cover Assembly	1	9	1
14-9989	Wheel & Tire Assembly	1	29	2
16-0029	Wheel - Tire & Gear Ass'y	4	30	2
16-1629	Panel - Control	6	1	1
16-2119	Housing Assembly	2	36	1
19-4050	Knob - Handle Release	6	18	2
25-7740	Knob - Arm	4	3	2
25-7740	Knob - Spring Arm	1	2	2
26-0670	Screw - Blade	3	12	1
27-6232	Bolt - Wheel	1	28	2
27-6232	Wheel Bolt	4	32	2
27-6250	Bushing	1	27	4
27-6250	Bushing - Wheel	4	31	4
27-7210	Screw - Shoulder	6	10	2
27-7211	Screw - Shoulder	6	9	2
29-9570	Bushing - Yoke	4	37	1
33-3208	Rod - Shield	1	23	1
36-4780	Washer - Thrust	4	42	1
36-4791	Washer - Thrust	4	46	2
37-7260	Screw - Special	1	13	2
38-7820	Bearing - Ball	5	58	1
40-1940	Washer - Wheel	2	30	4
42-3520	End Cap	4	5	2
44-0580	Shield - Rear	1	24	1
46-5481	Cable - Traction	7	6	1
46-5520	Lever - Traction	7	5	1
46-6440	Cover - Control Cables	6	7	1
46-6810	Screw - Hex Washer Hd.	1	8	1
46-6811	Screw w/Washer	1	10	3
46-6980	Support - Cable	7	8	1
46-7030	Retainer - Cable	1	18	1
48-2060	Needle Bearing	4	21	2
49-1630	Support - Spacer	7	2	2
49-2040	Screw - Self Tapping	4	8	8
49-2750	Pin - Handle	6	15	2
52-7406	Belt Cover Assembly	1	19	1
55-3760	Gear - Pinion 15 Tooth	4	47	1
55-3770	Gear - 49 Tooth 1st Gear	5	56	1
55-3780	Gear - Pinion 20 Tooth	4	48	1
55-3790	Gear - 44 Tooth 2nd Gear	5	55	1
55-3800	Gear - Pinion	5	49	1
55-3810	Gear - 39 Tooth 3rd Gear	5	54	1
56-6270	Decal - Danger	1	6	1
60-8710	Gear Case - Upper	5	59	1
60-8730	Cover - Gear Case	4	44	1
60-8750	Bushing - Int. Shaft	4	45	2
60-8770	Bushing - Output Shaft	4	43	1
60-8790	Sleeve - Gear	5	53	1
60-8800	Shaft - Intermediate	5	50	1
60-8810	Retainer - Shift Fork	4	38	1
60-8821	Lever - Shift	4	17	1
60-8840	Pulley - Half	4	10	2
60-8850	Bushing - Output Shaft	5	51	1
60-8870	Yoke - Shift	4	36	1
60-8890	Pinion - Bevel	5	57	1
62-3720	Clamp - Cable	1	22	1
62-3900	V-Belt	4	13	1
62-4320	Bracket - Belt Guide	4	7	1
62-6660	Spacer	4	9	1
62-6673	Gear Case Assembly	5	*	1
62-7540	Retainer - Blade	3	13	1
62-7550	Pulley - Driver	3	14	1
63-8701	Pivot Arm Assembly	4	2	2
63-8721	Spring Arm Assembly	4	4	2
65-2720	Ring - Retaining	4	24	4
65-4710	Ring - Friction	4	25	2
65-4720	Spring	4	28	2
65-4730	Thrust Washer	4	22	2
65-4740	Thrust Washer	4	23	4
65-4750	Pinion	4	1	2
65-4760	Washer - Clutch	4	26	2
65-4770	Shaft - Output	4	18	1
65-5250	Clip - Spring	5	61	1
66-0560	Screw - Pivot	1	26	2
66-0570	Guide - Belt	3	6	1
66-0580-03	Arm - Pivot	2	31	2
66-1790	Decal - Danger	6	4	1
66-5351	Lever - Control	7	11	1
66-6040	Key - Rocker R.H.	4	*	1
66-6050	Key - Rocker L.H.	4	27	1
70-9760	Bushing	4	19	2
71-0561	Spring Arm Ass'y - R.H.	1	1	1
71-0571	Spring Arm Ass'y - L.H.	2	33	1
71-3080	Bar - Control	7	13	1
74-1660	Cover - Wheel	4	29	2
74-1670	Spacer - Wheel Cover	4	33	2
74-3894	Control - Throttle	6	5	1
76-0760	Key - Shift	4	40	2
76-0770	Collar - Shift	4	41	1
76-0780	Sleeve - Shift Key	4	39	1
76-2712	Control - Ground Speed	6	2	1
76-4330	Cable - Brake	7	7	1
77-0280	Shield - Heat	1	20	1
82-5531-05	Lower Handle Assembly	6	12	1
82-5680	Bracket - Traction Adj.	1	17	1
82-8780	Cable - Retainer	4	15	1
84-8361	Latch - Handle L.H.	6	8	1
84-8401	Latch - Handle R.H.	6	24	1
86-9671	Guide - Rope	6	21	1
91-2253	Cover - Wheel	2	37	1
92-1599	Stiffener - Blade	3	10	1
92-1703	Decal - Danger	1	11	1
92-1720	Plate - Kicker Rt. Front	1	3	1
92-1730	Plate - Kicker Rt. Rear	1	4	1
92-1750	Plate - Kicker Left Rear	1	12	1
92-2260	Screw - Handle	7	3	2
92-2260	Screw - Handle	6	16	2
92-2269	Screw - Handle	7	4	1
92-2278	Handle - Upper	6	3	1
92-2279	Decal - H.O.C.	1	25	4
92-2281	Decal - Deck	2	35	1
92-2282	Decal - Engine	3	1	1
92-2290	Decal - Instruction	6	23	1
92-3146	Decal - Front Panel	6	19	1
2210-249	Clamp - Casing	3	4	1
2210-313	Screw - Clamp	3	5	1
2210-316	Stop - Rope	3	2	1
237-153	O-Ring	5	60	2
2412-50	Clip Convoluted Tubing	6	6	4
302-56	Fitting - Grease	4	20	2
321-39	Screw - Hex Hd. Cap	7	1	1
3253-22	Washer - Lock	3	11	1
3256-1	Washer - Flat	7	9	1
3256-24	Washer - Flat	4	12	1
3272-10	Pin - Cotter	4	14	1
3290-378	Tie - Cable	1	15	1

*Not Illustrated

TORO PART NUMBER INDEX (Cont.)

Part No.	Description	Pg. No.	Ref. No.	Qty.
3290–378	Tie – Cable	6	17	2
3295–35	Rivet	1	21	2
3296–5	Locknut	4	11	1
3296–6	Locknut	4	34	2
3296–6	Nut – Lock	2	32	4
3296–47	Nut – Lock	6	14	3
3296–72	Nut – Lock	6	13	3
3296–73	Nut – Lock	7	10	2
3296–73	Nut – Lock	6	22	1
3296–74	Nut – Lock	7	12	2
32121–120	Pin – Coil	5	52	1
32144–70	Screw – Hex Washer Hd.	1	16	2
32144–70	Screw – Thread Forming	3	7	2
32144–70	Screw – Thread Forming	4	16	1
32144–85	Screw	4	35	2
32144–85	Screw – Hex Hd. Cap	2	34	2
32144–102	Screw – Thread Forming	3	8	3
32144–111	Screw – Pan Hd.	1	5	8
32144–115	Screw – Self Tap Slotted	6	20	5

OPTIONAL EQUIPMENT

Recycler Side Discharge Kit .... Model No. 59189
Wear Plate Kit ..... Part No. 49–4080
Recycler Bagging Kit ..... Model No. 59174
Dethatcher Kit ..... Model No. 59131

*Not Illustrated

PRODUCT CHANGES

In an effort to make improvements available to TORO owners as quickly as possible, minor changes are incorporated into Toro's products from time to time that do not become immediately shown in the Parts Catalog. If such a change has been made in your unit, which is not reflected in your manual, see your TORO Distributor or his Authorized TORO Service Dealer for information and part numbers.

COUNTRIES OTHER THAN THE UNITED STATES OR CANADA

Customers who have purchased TORO products exported from the United States or Canada should contact their Toro Distributor (Dealer) to obtain guarantee policies for your country, province or state. If for any reason you are dissatisfied with your Distributor's service or have difficulty obtaining guarantee information, contact the TORO importer. If all other remedies fail, you may contact us at The Toro Company.

MAINTENANCE RECORD

Date								

Compliance with Radio Interference Regulations Certified.
Certifie Conforme au Reglement sur le Brouillage Radioelectrique.

Litho in U.S.A.

MAINTENANCE RECORD

Date								

MAINTENANCE RECORD

Date								