FORM NO. 3315–988

TORO®

MODEL NO. 20433–3900001 & UP

PARTS CATALOG

21" RECYCLER®
Mower

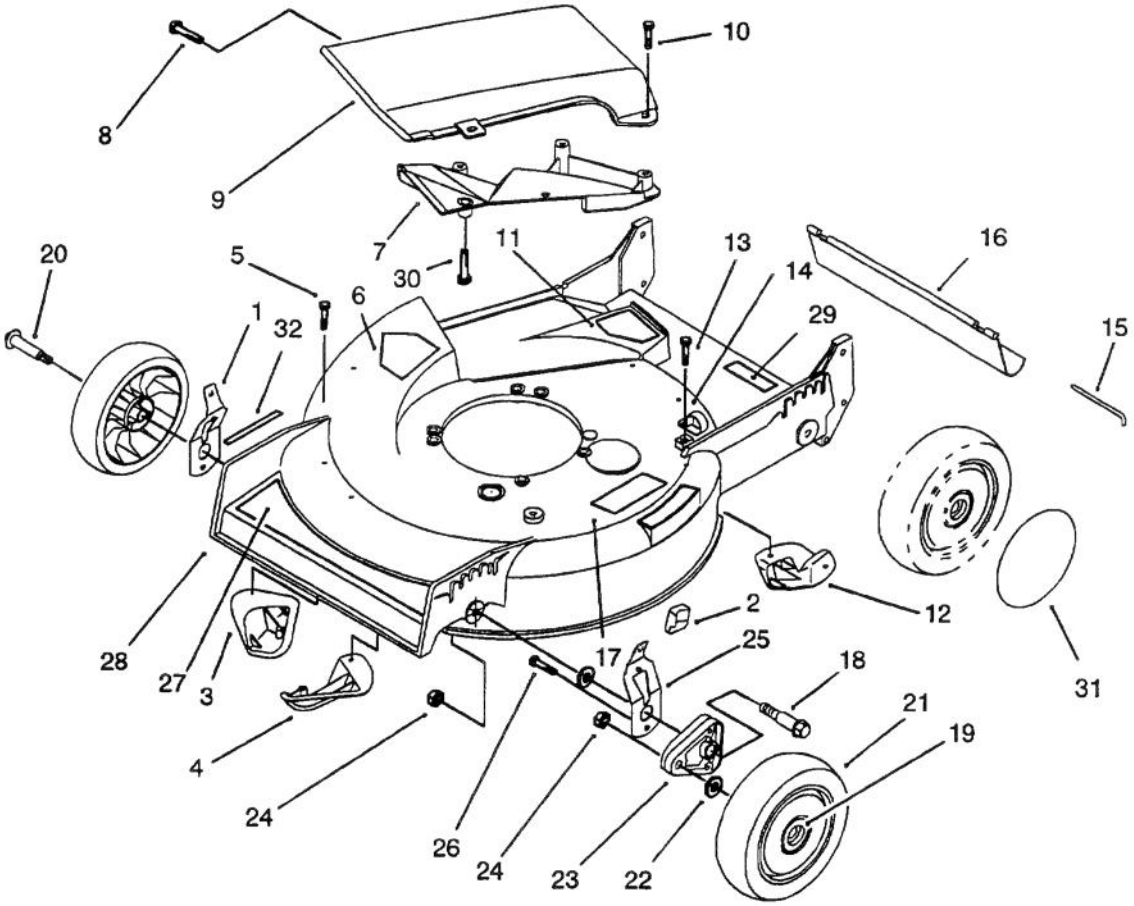

C–1398

HOUSING ASSEMBLY

Ref. No.	Part No.	Description	No. Used
1	71–0560	Spring Arm Ass'y – R.H.	2
2	25–7740	Knob – Spring Arm	4
3	92–1720	Plate – Kicker Rt. Front	1
4	92–1730	Plate – Kicker Left Front	1
5	32144-111	Screw – Pan Hd.	6
6	39–5770	Decal – Danger	1
7		Deflector – Recycler	1
8	46–6810	Screw – Hex Washer Hd. Thread Forming	1
9	14–4069	Cover Assembly Incl. Ref. #7 & 30)	1
10	46–6811	Screw w/Washer	3
11	82–8450	Decal – Danger	1
12	92–1660	Plate – Kicker Left Rear	1
13	32144–70	Screw – Hex Washer Hd. Thread Forming	1
14	2412–93	R–Clamp	1
15	33–3208	Rod – Shield	1
16	44–0580	Shield – Rear	1

Ref. No.	Part No.	Description	No. Used
17	71–1280	Decal – Danger	1
18	66–0560	Screw – Pivot	4
19	27–6250	Bushing – Wheel	8
20	27–6232	Bolt – Wheel	4
21	11–9509	Wheel & Tire Assembly (Incl. Ref. #19)	4
22	40–1940	Washer – Wheel	8
23	66–0580	Arm – Pivot	4
24	3296–6	Nut – Lock	8
25	71–0570	Spring Arm Ass'y – L.H.	2
26	32144–85	Screw – Hex Hd. Cap	4
27	92–2283	Decal – Deck	1
28	16–1579	Housing Assembly (Incl. Ref. #3–6, 11, 12, 17, 29, & 31)	1
29	92–1779	Decal – Warning	1
30		Screw – Pan Hd.	5
31	91–2253	Cover – Wheel	1
32	92–2279	Decal – H.O.C.	4

©The TORO Company –1993
All Rights Reserved

TPS

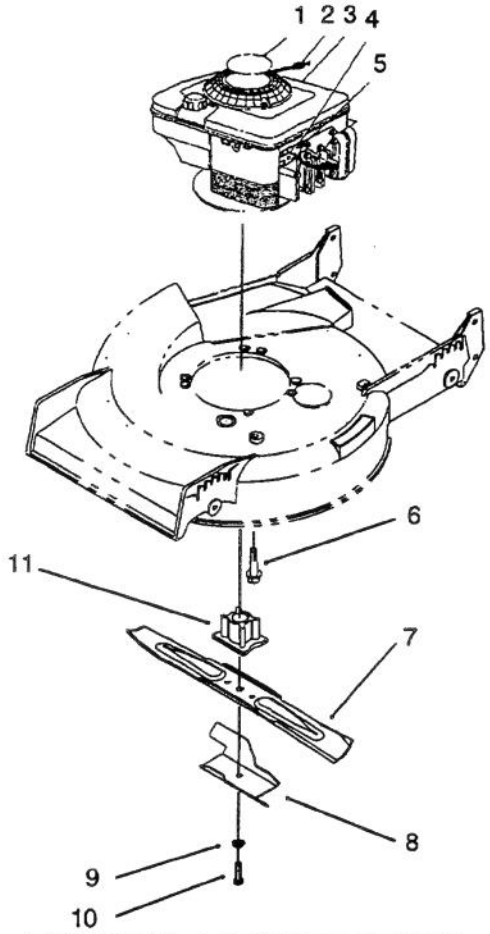

C–1430

ENGINE ASSEMBLY

Ref. No.	Part No.	Description	No. Used
1	92–2294	Decal – Engine	1
†2	2210–316	Stop – Rope	1
3		Engine	1
†4	2210–249	Clamp – Casing	1
†5	2210–313	Screw – Clamp	1
6	32144–102	Screw – Thread Forming	3
7	14–9419	Blade – 21"	
8	92–1599	Accelerator	1
9	3253–22	Lockwasher	1
10	26–0670	Screw – Blade	1
11	62–7540	Retainer – Blade	1

†Provided with Engine

3315–988

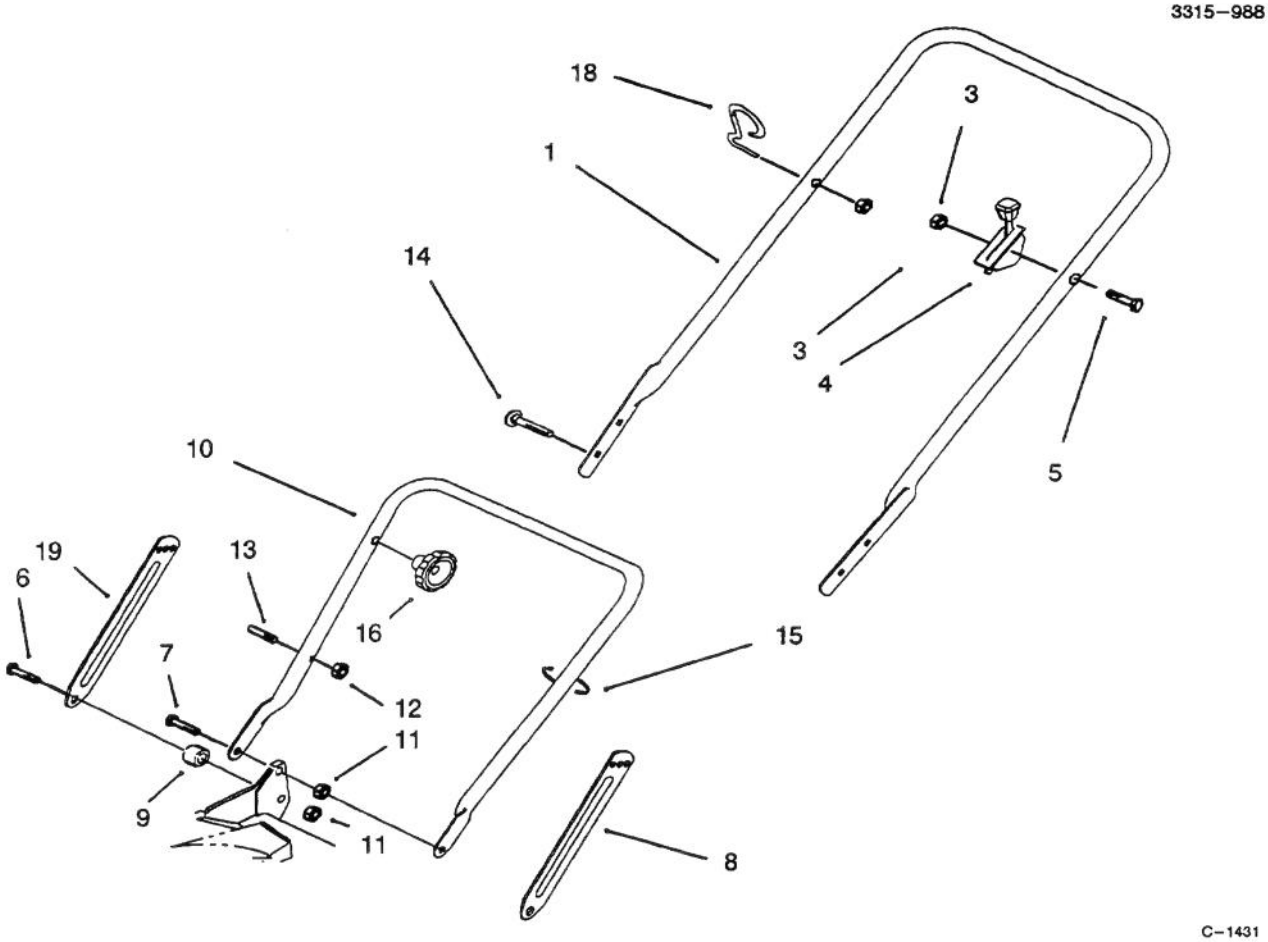

C–1431

HANDLE ASSEMBLY

Ref. No.	Part No.	Description	No. Used
1	92–3136	Handle – Upper	1
3	3296–73	Locknut	2
4	76–3248	Control – Throttle (Bend Type #3) (Sheath Lg. 47") (Wire Lg. 1–3/4")	1
5	321–48	Screw – Hex Hd. Cap	1
6	27–7210	Screw – Shoulder	2
7	27–7211	Screw – Shoulder	2
8	84–8360	Latch – Handle L.H.	1

Ref. No.	Part No.	Description	No. Used
9	3–3287	Spacer	2
10	82–5530	Lower Handle Assembly	1
11	3296–72	Locknut	4
†12	3296–47	Locknut	2
†13	49–2750	Pin – Handle	2
14	92–2260	Screw – Handle	2
15	3290–378	Tie – Cable	2
16	19–4050	Knob – Handle Release	2
18	86–9671	Guide – Rope	1
19	84–8400	Latch – Handle R.H.	1

†Service Replacement Parts

3315–988

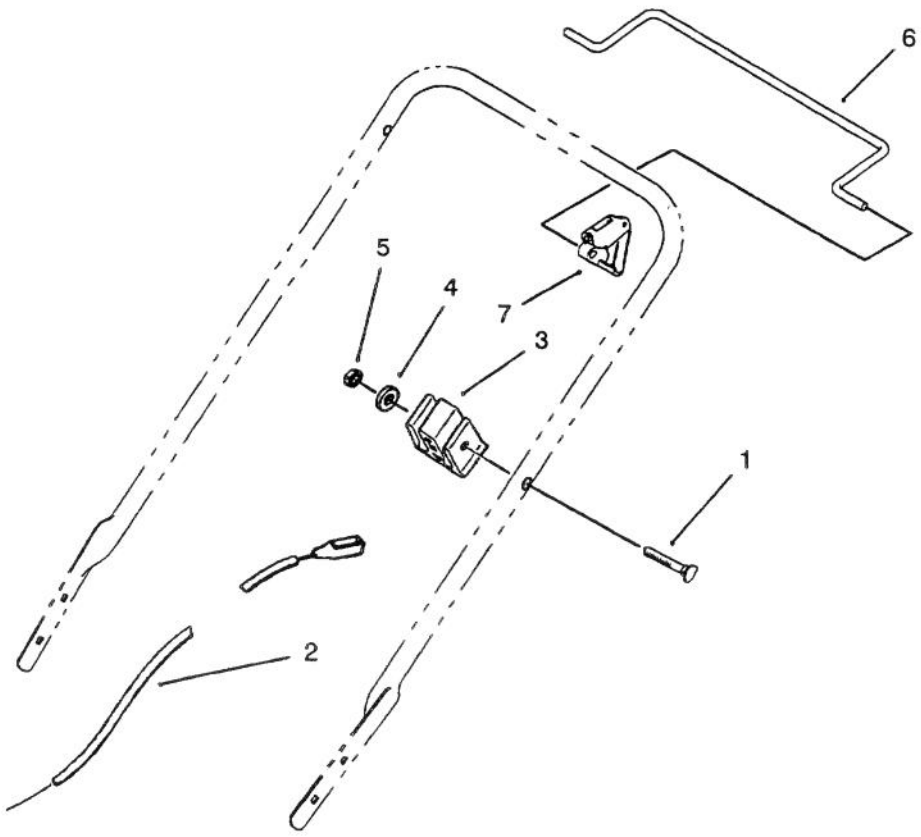

C–1432

BRAKE CONTROL ASSEMBLY

Ref. No.	Part No.	Description	No. Used
1	92–2269	Screw – Handle	1
2	92–4065	Cable – Brake	1
3	46–6980	Support – Cable	1
4	3256–1	Washer – Flat	1

Ref. No.	Part No.	Description	No. Used
5	3296–73	Nut – Lock	2
6	92–3134	Bar – Control	1
7	92–5412	Stop – Pivot	1

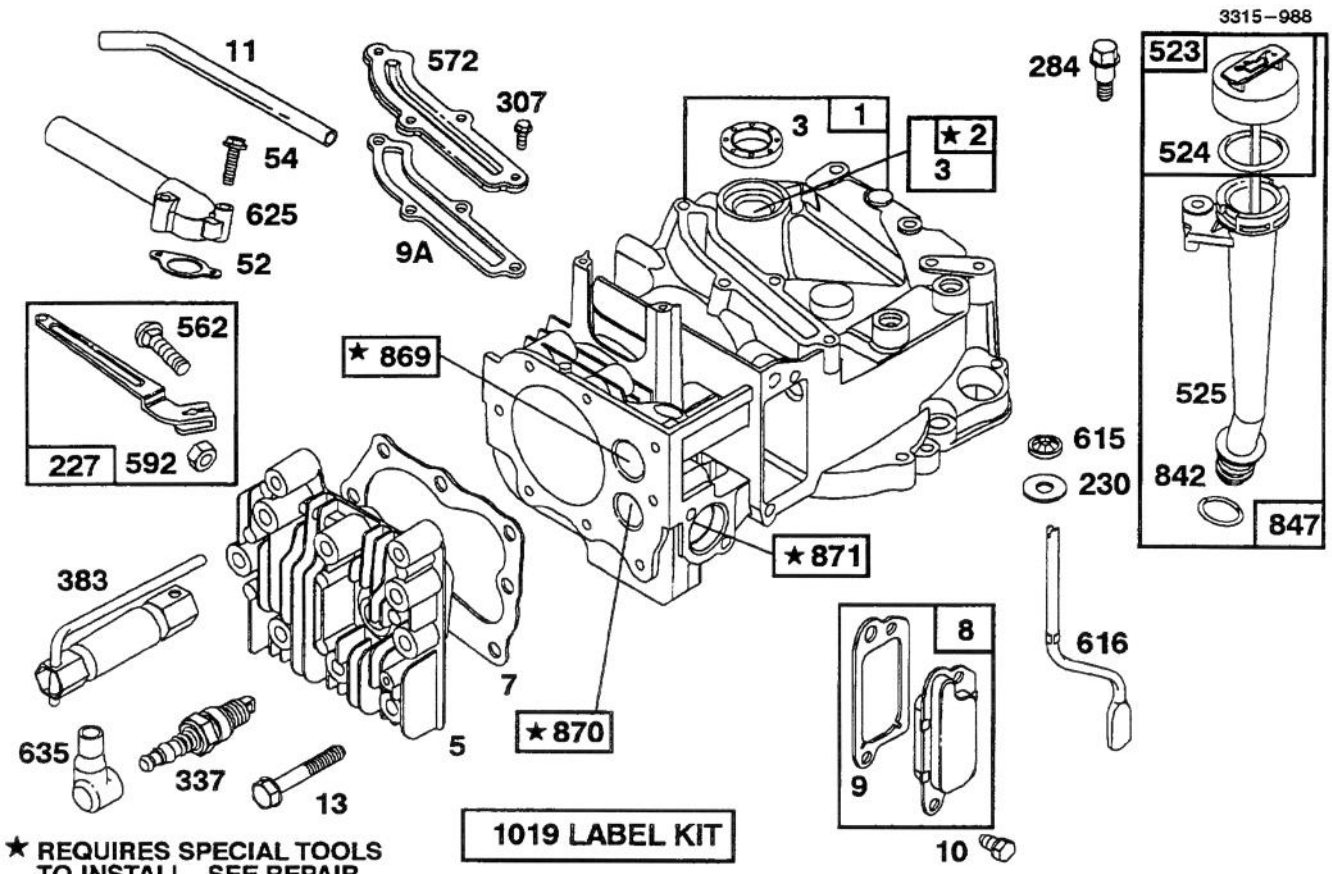

★ REQUIRES SPECIAL TOOLS TO INSTALL. SEE REPAIR INSTRUCTION MANUAL.

Assemblies include all parts shown in frames.

ENGINE BRIGGS & STRATTON MODEL 122702-3171-01

Ref. No.	Part No.	Description	No. Used
1	493260	Cylinder Assembly	1
2	293708	Bushing–Cylinder	1
★3	299819	Seal–Oil	1
5	213861	Head–Cylinder	1
★7	272200	Gasket–Cylinder Head	1
8	495786	Breather–Valve Chamber	1
★9	272481	Gasket–Valve Cover	1
★9A	272238	Gasket–Baffle Plate	1
10	94650	Screw–Breather Mtg.	1
11	231685	Tube–Breather	1
13	94547	Screw–Cylinder Head	1
★52	272199	Gasket–Intake Elbow	1
54	94526	Screw–Intake Elbow Mtg.	1
227	492349	Lever Assembly–Gov.	1
230	67072	Washer–Gov. Crank	1
284	94511	Screw–Hex. Head	1
307	94515	Screw–Hex. Head	1
337	802592	Plug–Spark	1
383	89838	Wrench–Spark Plug	1

Ref. No.	Part No.	Description	No. Used
523	495264	Cap With Dipstick–Oil Filler	1
★524	280393	Seal–Filler Tube	1
525	495265	Tube–Oil Filler	1
562	92613	Bolt–Governor Lever	1
572	224328	Baffle–Cylinder	1
592	231082	Nut–Hex.	1
615	94474	Pushnut (Governor Crank)	1
616	262578	Crank–Governor	1
625	492717	Tube–Fuel Intake	1
635	66538	Elbow–Spark Plug	1
★842	280966	Seal–O-Ring	1
847	495263	Oil Fill Tube and Dipstick Assy.	1
869	213512	Seat–Intake Valve	1
870	213513	Seat–Exhaust Valve	1
871	262001	Guide–Exhaust Valve **Note:** 63709 Guide–Intake Valve	1
1019	494256	Label Kit	1

★ Included in Gasket Set–Part No. 493263.

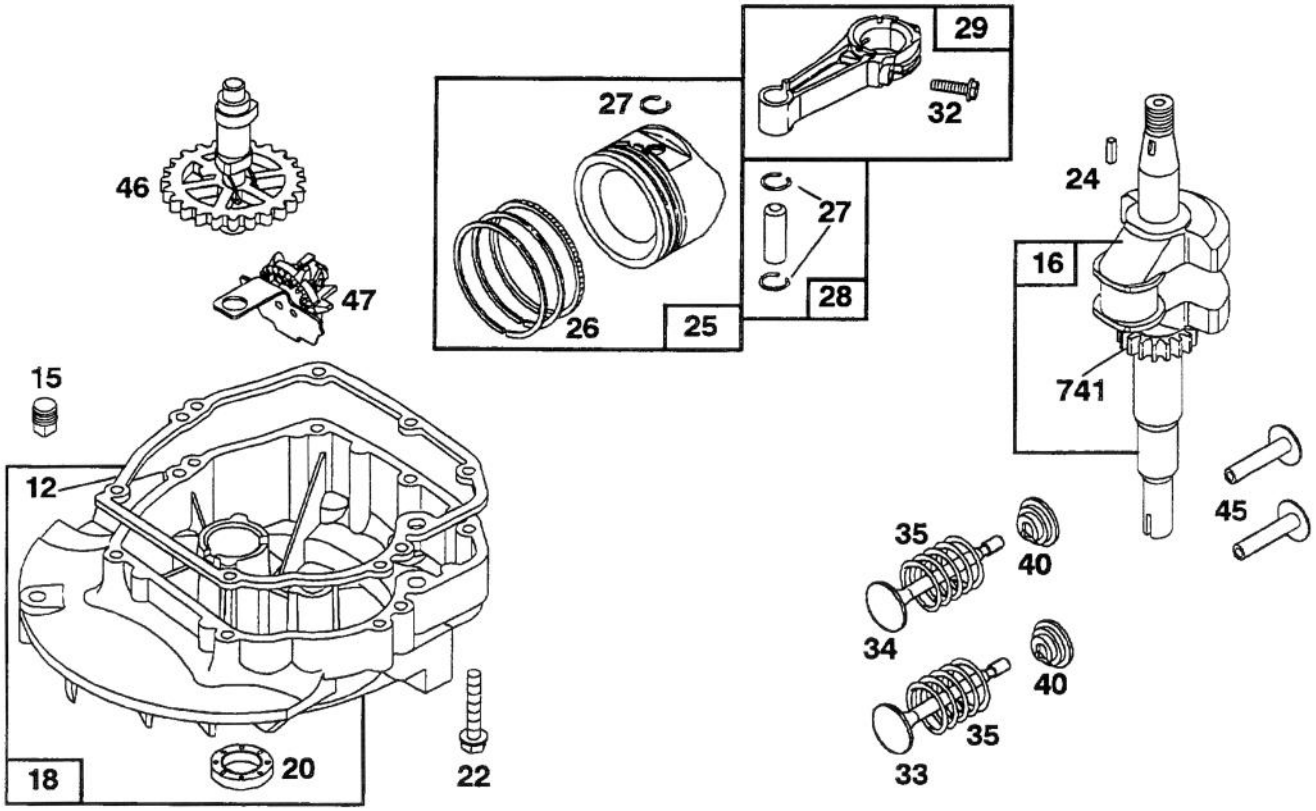

Assemblies include all parts shown in frames.

ENGINE BRIGGS & STRATTON MODEL 122702-3171-01

Ref. No.	Part No.	Description	No. Used
★12	272198	Gasket–Crankcase	1
15	94720	Plug–Oil Drain	1
16	494546	Crankshaft	
		Note: Order 94388 For Timing Gear Key.	1
18	493279	Sump–Engine	1
★20	399781	Seal–Oil	1
22	94220	Screw–Sump Mounting Sem	1
		Note: 94612 Screw–Sump Mtg. (One (1) Used in Hole Nearest Breather.)	1
24	222698	Key–Flywheel	1
25	493262	Piston Assy. (Std.)	1
	493385	Piston Assy. (.010" O.S.)	1
	493386	Piston Assy. (.020" O.S.)	1
	493387	Piston Assy. (.030" O.S.)	1
26	493261	Ring Set–Piston (Standard)	1
	493388	Ring Set–Piston (.010" O.S.)	1
	493389	Ring Set–Piston (.020" O.S.)	1
	493390	Ring Set–Piston (.030" O.S.)	1

Ref. No.	Part No.	Description	No. Used
27	26026	Lock–Piston Pin	1
28	298909	Pin Assembly–Piston (Standard)	1
	298908	Pin Assembly–Piston (.005" O.S.)	1
29	490566	Rod Assembly– Connecting	1
		Note: For Connecting Rod With .020" Undersize Crankpin Bearing– Order No. 490743.	1
32	94405	Screw–Connecting Rod	1
33	262651	Valve–Exhaust	1
34	262652	Valve–Intake	1
35	262224	Spring–Valve	1
40	93312	Retainer–Valve Spring	1
45	262204	Tappet–Valve	1
46	492828	Gear–Cam	1
47	493737	Oil Slinger Gear and Bracket	1
741	262598	Gear–Timing	1

★ Included in Gasket Set–Part No. 493263.

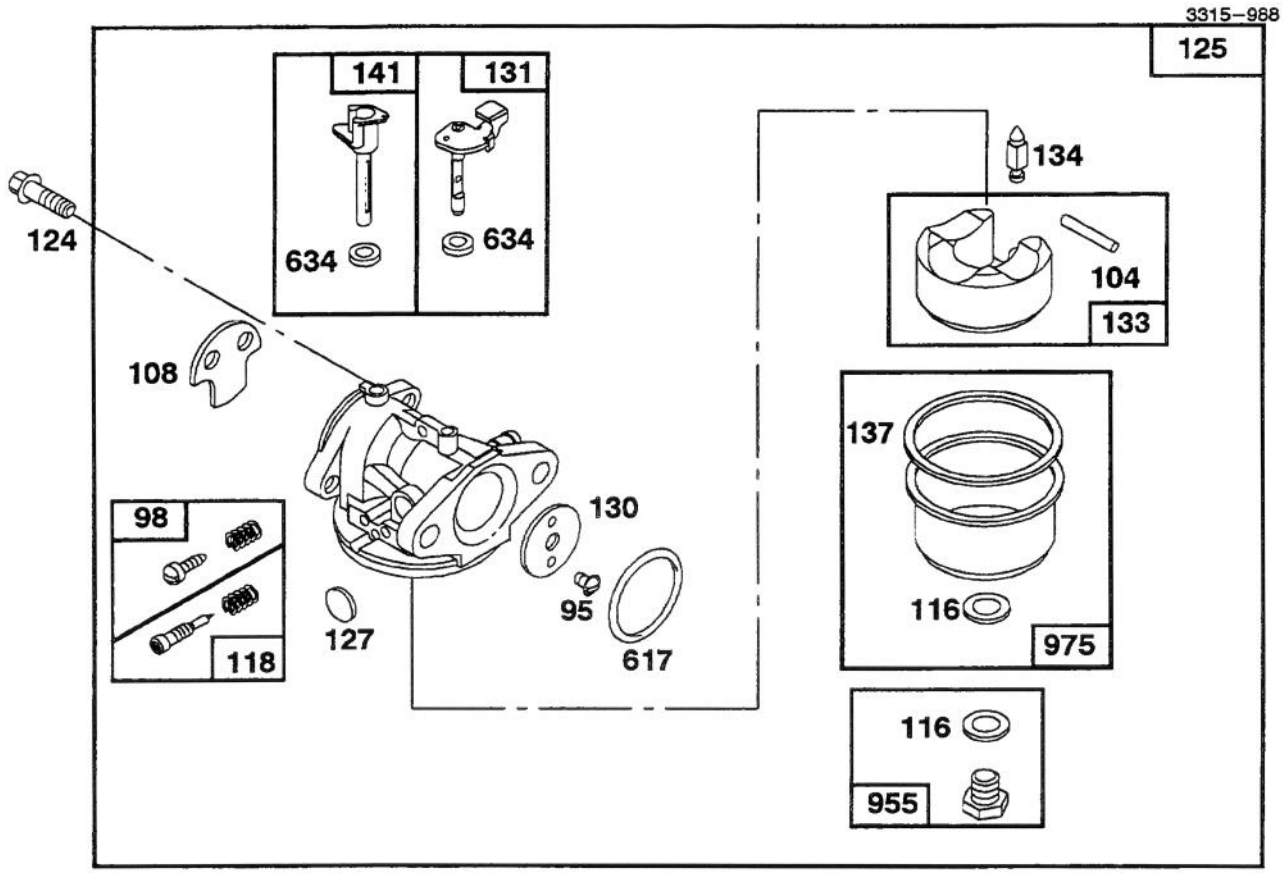

Assemblies include all parts shown in frames.

ENGINE BRIGGS & STRATTON MODEL 122702-3171-01

Ref. No.	Part No.	Description	No. Used
95	94098	Screw–Throttle Valve Mtg.	1
98	398185	Screw–Idle Adjustment	1
•104	231371	Pin–Float Hinge	1
108	223471	Valve–Choke	1
••◆116		Gasket–Sealing (Sold in Kit Only).	1
•118	493765	Valve and Spring– Needle	1
124	94525	Screw–Carburetor Mtg.	1
125	494216	Carburetor Assembly	1
•127		Plug–Welch (Sold in Kit Only).	1
130	223470	Valve–Throttle	1

Ref. No.	Part No.	Description	No. Used
131	493267	Shaft and Lever–Throttle	1
133	398187	Float Assy.–Carburetor	1
•134	398188	Valve–Inlet (Includes Seat)	1
••◆137		Gasket–Bowl (Sold in Kit Only).	1
141	494218	Shaft–Choke	1
••◆617	270344	Seal–Fuel Intake Tube	1
••◆634		Washer–Shaft (Sold in Kit Only).	1
955	493763	Screw–Bowl Mtg.	1
975	493640	Bowl Assy.–Carburetor	1

• Included in Carburetor Overhaul Kit–Part No. 493762.
◆ Included in Carburetor Gasket Set–Part No. 490937.

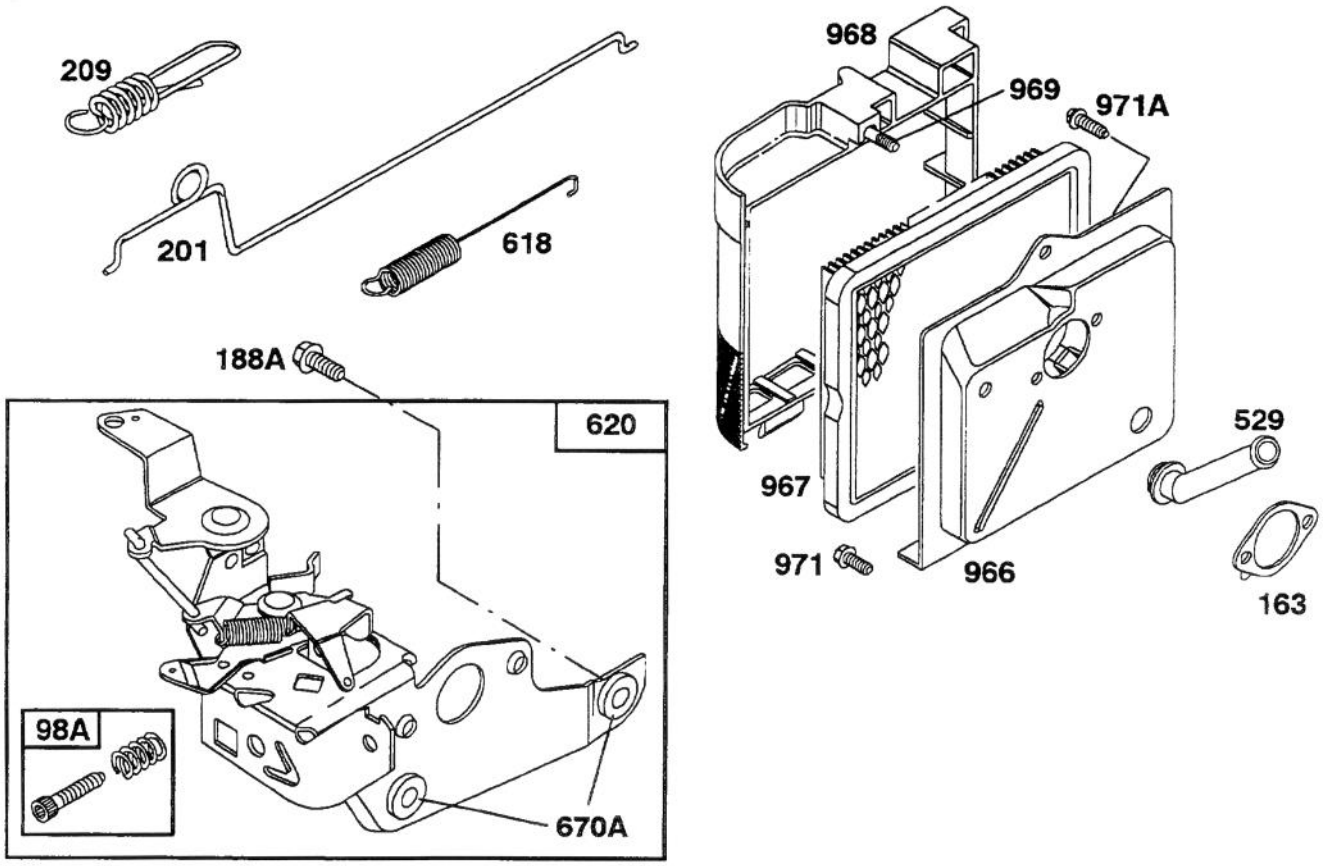

Assemblies include all parts shown in frames.

ENGINE BRIGGS & STRATTON MODEL 122702-3171-01

Ref. No.	Part No.	Description	No. Used
98A	493280	Screw Assy.–Speed Adjust	1
★163	272296	Gasket–Air Cleaner	1
188A	94644	Screw–Hex. Head	1
201	262579	Link–Governor	1
209	262661	Spring–Governor	1
529	280943	Grommet–Breather	1
618	262749	Spring–Choke Return	1
620	493894	Bracket Assembly–Carburetor Control	1

Ref. No.	Part No.	Description	No. Used
670A	493823	Spacer–Carburetor Bracket	1
966	492363	Base–Air Cleaner	1
967	491588	Filter–Air	1
968	280937	Cover–Air Cleaner	1
969	94120	Screw–Cover Mtg.	1
971	94269	Screw–Air Cleaner	1
971A	94121	Screw–Base to Carb.	1

★Included in Gasket Set–Part No. 493263.

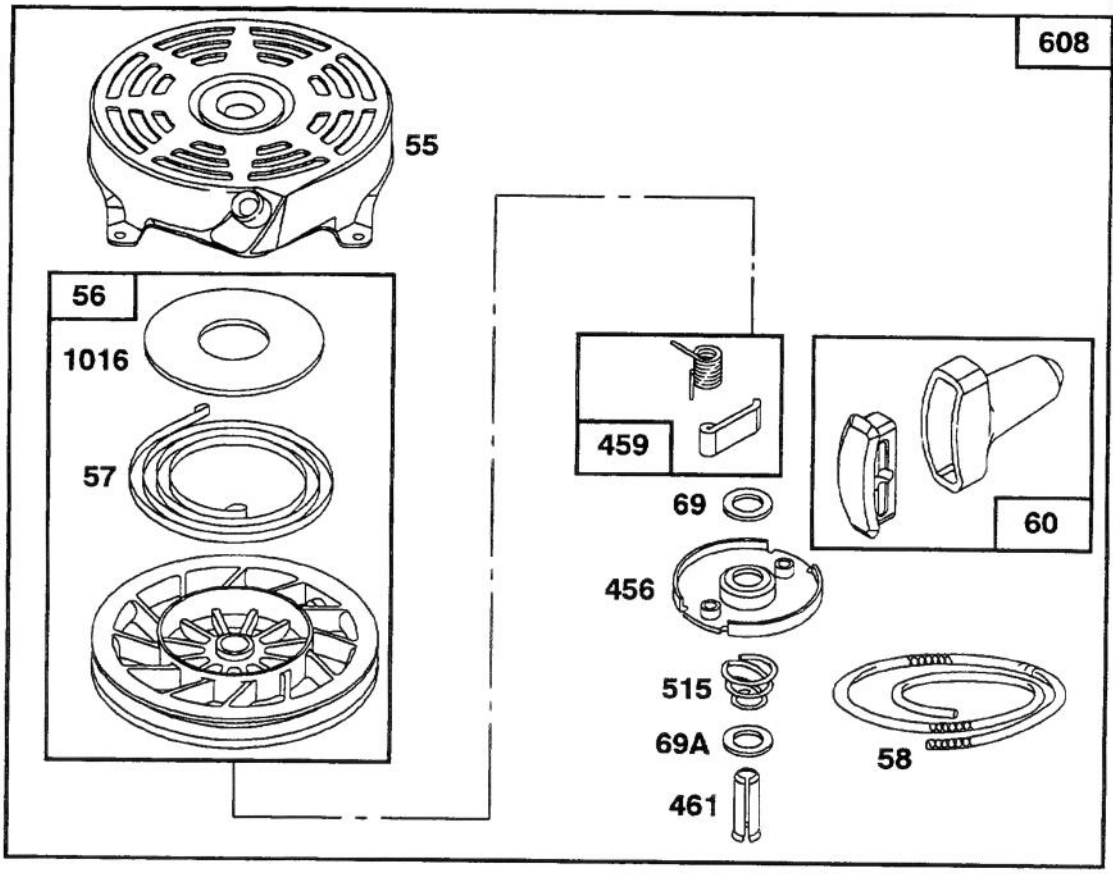

Assemblies include all parts shown in frames.

ENGINE BRIGGS & STRATTON MODEL 122702-3171-01

Ref. No.	Part No.	Description	No. Used
55	492831	Housing–Rewind Starter	1
56	492832	Pulley–Rewind Starter	1
57	262594	Spring–Rewind Starter	1
58	280399	Rope–Rewind Starter	1
60	393152	Handle–Rewind Starter	1
69	280973	Washer–Rewind Starter	1
69A	224322	Washer–Rewind Starter	1
456	224321	Retainer–Rewind Starter	1

Ref. No.	Part No.	Description	No. Used
459	492833	Pawl–Starter	1
461	262626	Pin–Starter	1
515	262625	Spring–Torsion	1
608	493295	Starter Assy.–Rewind **Includes:** 94128 Screw–Hex. Head 92987 Nut–Hex.	1
1016	224278	Cover–Rewind Starter	1

3315–988

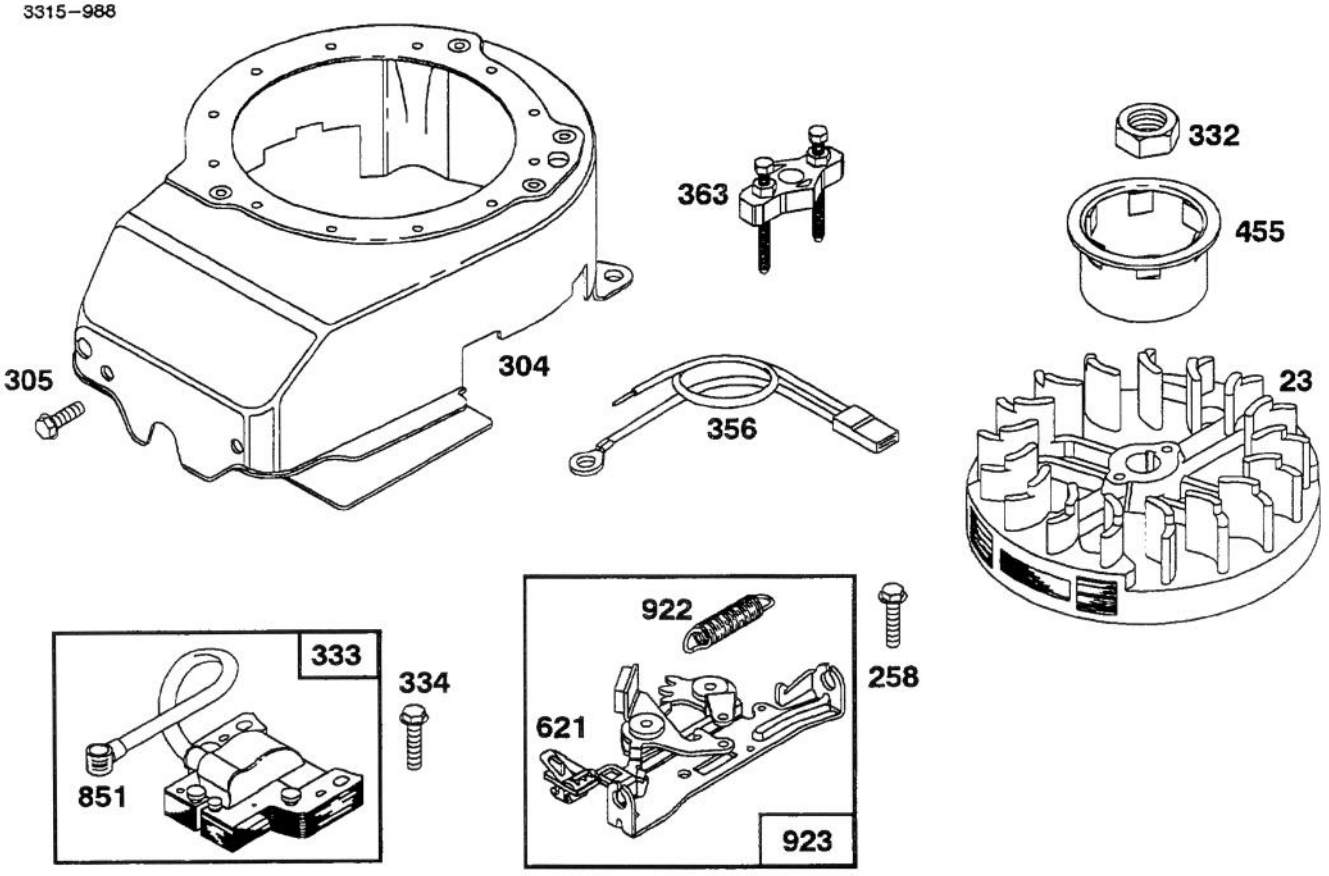

Assemblies include all parts shown in frames.

ENGINE BRIGGS & STRATTON MODEL 122702-3171-01

Ref. No.	Part No.	Description	No. Used
23	492177	Flywheel–Magneto	1
258	94512	Screw–Hex. Head	1
304	493293	Housing–Blower	1
305	94513	Screw–Hex. Head Sem	1
332	92284	Nut–Flywheel	1
333	802574	Armature–Magneto	1
334	94731	Screw–Armature Mtg.	1
356	398808	Wire–Ground	1

Ref. No.	Part No.	Description	No. Used
363	19069	Puller–Flywheel (Optional Accessory)	1
455	224250	Cup–Starter	1
621	396847	Switch–Stop	1
851	221798	Terminal–Ignition Cable	1
922	262640	Spring–Brake	1
923	492918	Brake Assembly	1

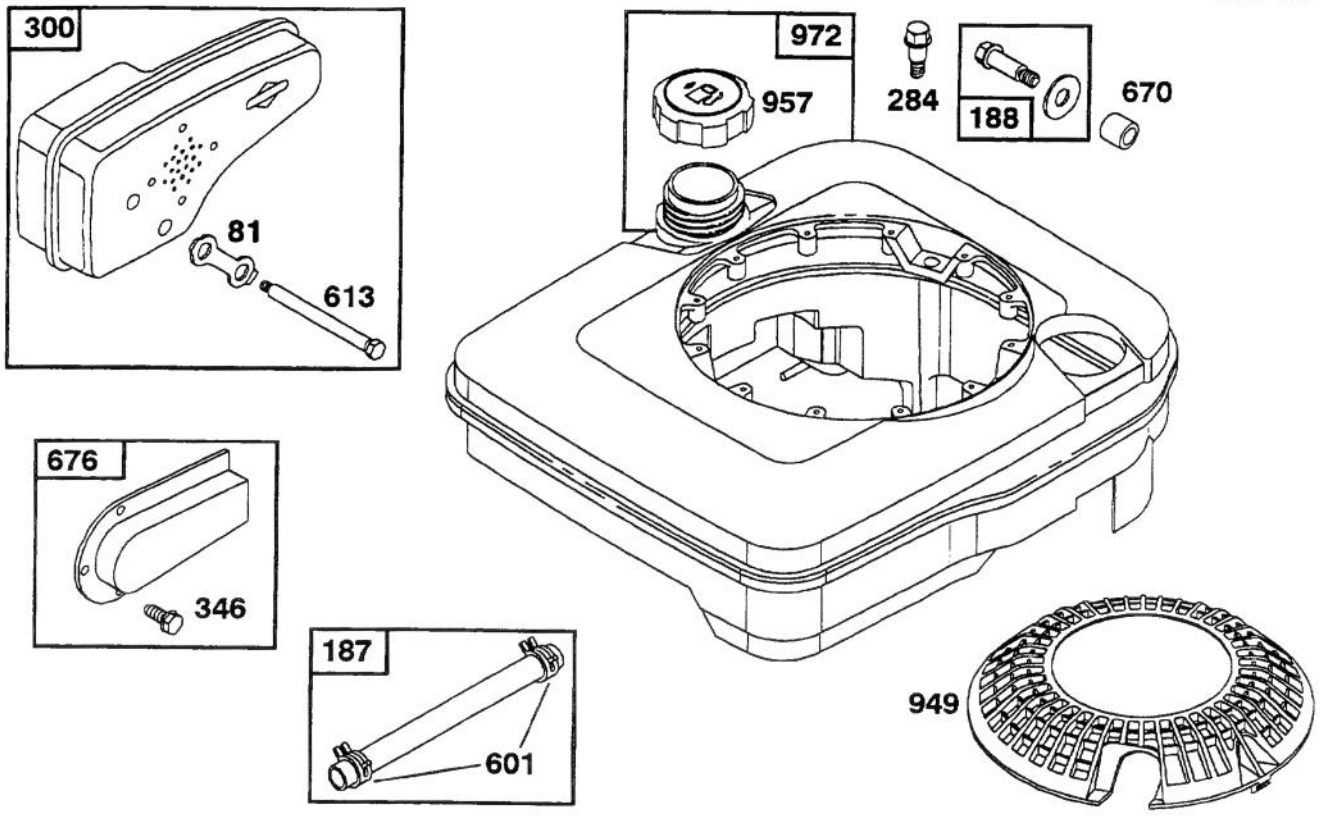

Assemblies include all parts shown in frames.

ENGINE BRIGGS & STRATTON MODEL 122702-3171-01

Ref. No.	Part No.	Description	No. Used
81	223664	Lock–Muffler Screw	1
187	492790	Hose–Fuel (Cut To Suit)	1
188	398540	Screw–Tank Mounting (Includes Washer)	1
284	94511	Screw–Hex. Head	1
300	490547	Muffler–Exhaust	1
346	93705	Screw–Hex. Head	1

Ref. No.	Part No.	Description	No. Used
601	93807	Clamp–Hose	1
613	94231	Screw–Muffler Mtg.	1
670	280512	Spacer–Fuel Tank	1
676	493871	Deflector–Muffler	1
949	281136	Guard–Finger	1
957	397974	Cap Assy.–Fuel	1
972	494358	Tank Assembly–Fuel	1

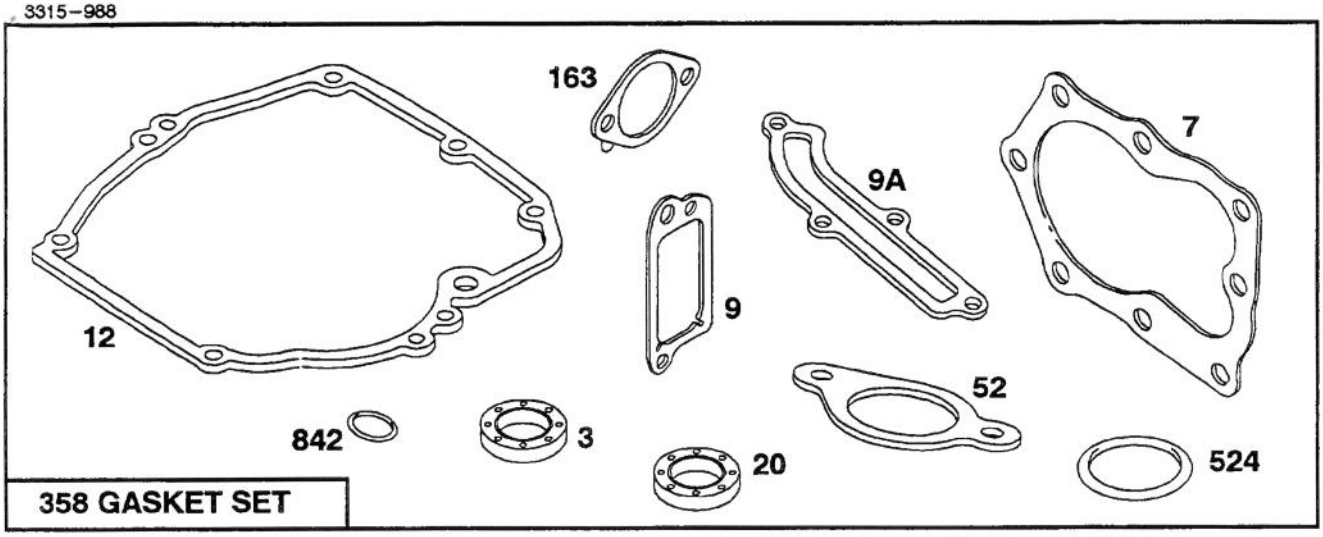

358 GASKET SET

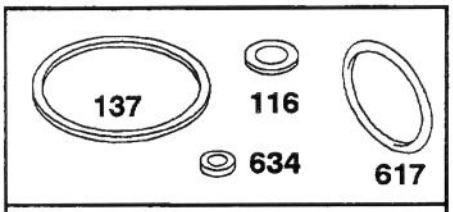

977 CARBURETOR GASKET SET

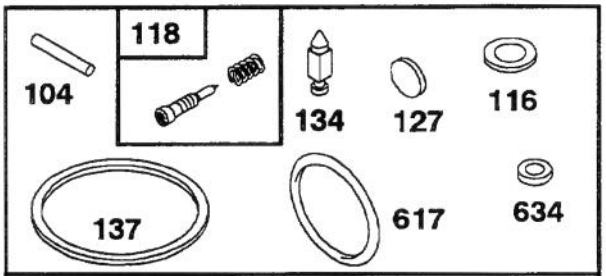

121 CARBURETOR OVERHAUL KIT

Assemblies include all parts shown in frames.

ENGINE BRIGGS & STRATTON MODEL 122702-3171-01

Ref. No.	Part No.	Description	No. Used
★3	299819	Seal–Oil	1
★7	272200	Gasket–Cylinder Hd.	1
★9	272481	Gasket–Valve Cover	1
★9A	272238	Gasket–Baffle Plate	1
★12	272198	Gasket–Crankcase	1
★20	399781	Seal–Oil	1
★52	272199	Gasket–Intake Elbow	1
●104	231371	Pin–Float Hinge	1
●◆116		Gasket–Sealing (Sold in Kit Only).	1
●118	493765	Valve and Spring–Needle	1
121	493762	Carburetor Overhaul Kit	1
●127		Plug–Welch (Sold in Kit Only).	1

Ref. No.	Part No.	Description	No. Used
●134	398188	Valve–Inlet (Includes Seat)	1
●◆137		Gasket–Bowl (Sold in Kit Only).	1
★163	272296	Gasket–Air Cleaner	1
358	493263	Gasket Set	1
★524	280393	Seal–Filler Tube	1
●◆617	270344	Seal–Fuel Intake Tube	1
●◆634		Washer–Shaft (Sold in Kit Only).	1
★842	280966	Seal–O-Ring	1
977	490937	Gasket Set–Carburetor	1

● Included in Carburetor Overhaul Kit–Part No. 493762.
◆ Included in Carburetor Gasket Set–Part No. 490937.
★ Included in Gasket Set–Part No. 493263.

TORO PART NUMBER INDEX (Cont.)

Part No.	Description	Pg. No.	Ref. No.	Qty.
	Screw	1	30	5
3-3287	Spacer	3	9	2
11-9509	Wheel & Tire Assembly	1	21	4
14-4069	Cover Assembly	1	9	1
14-9419	Blade - 21	2	7	
16-1579	Housing Assembly	1	28	1
19-4050	Knob - Handle Release	3	16	2
25-7740	Knob - Spring Arm	1	2	4
26-0670	Screw - Blade	2	10	1
27-6232	Bolt - Wheel	1	20	4
27-6250	Bushing - Wheel	1	19	8
27-7210	Screw - Shoulder	3	6	2
27-7211	Screw - Shoulder	3	7	2
33-3208	Rod - Shield	1	15	1
39-5770	Decal - Danger	1	6	1
40-1940	Washer - Wheel	1	22	8
44-0580	Shield - Rear	1	16	1
46-6810	Screw - Hex Washer Hd.	1	8	1
46-6811	Screw w/Washer	1	10	3
46-6980	Support - Cable	4	3	1
49-2750	Pin - Handle	3	13	2
62-7540	Retainer - Blade	2	11	1
66-0560	Screw - Pivot	1	18	4
66-0580	Arm - Pivot	1	23	4
71-0560	Spring Arm Ass'y - R.H.	1	1	2
71-0570	Spring Arm Ass'y - L.H.	1	25	2
71-1280	Decal - Danger	1	17	1
76-3248	Control - Throttle	3	4	1
82-5450	Decal - Danger	1	11	1
82-5530	Lower Handle Assembly	3	10	1
84-8360	Latch - Handle L.H.	3	8	1
84-8400	Latch - Handle R.H.	3	19	1
86-9671	Guide - Rope	3	18	1
91-2253	Cover - Wheel	1	31	1
92-1599	Accelerator	2	8	1
92-1660	Plate - Kicker Left Rear	1	12	1
92-1720	Plate - Kicker Rt. Front	1	3	1
92-1730	Plate - Kicker Left Front	1	4	1
92-1779	Decal - Warning	1	29	1
92-2260	Screw - Handle	3	14	2
92-2269	Screw - Handle	4	1	1
92-2279	Decal - H.O.C.	1	32	4
92-2283	Decal - Deck	1	27	1
92-2294	Decal - Engine	2	1	1
92-3134	Bar - Control	4	6	1
92-3136	Handle - Upper	3	1	1
92-4065	Cable - Brake	4	2	1
92-5412	Stop - Pivot	4	7	1
2210-249	Clamp - Casing	2	4	1
2210-313	Screw - Clamp	2	5	1
2210-316	Stop - Rope	2	2	1
2412-93	R-Clamp	1	14	1
321-48	Screw - Hex Hd. Cap	3	5	1
3253-22	Lockwasher	2	9	1
3256-1	Washer - Flat	4	4	1
3290-378	Tie - Cable	3	15	2
3296-6	Nut - Lock	1	24	8
3296-47	Locknut	3	12	2
3296-72	Locknut	3	11	4
3296-73	Locknut	3	3	2
3296-73	Nut - Lock	4	5	2
32144-70	Screw - Hex Washer Hd.	1	13	1
32144-85	Screw - Hex Hd. Cap	1	26	4
32144-102	Screw - Thread Forming	2	6	3
32144-111	Screw - Pan Hd.	1	5	6

OPTIONAL EQUIPMENT

Recycler Side Discharge Kit .... Model No. 59189
Wear Plate Kit ..... Part No. 49-4080
Recycler Bagging Kit ..... Model No. 59179

*Not Illustrated

PRODUCT CHANGES

In an effort to make improvements available to TORO owners as quickly as possible, minor changes are incorporated into Toro's products from time to time that do not become immediately shown in the Parts Catalog. If such a change has been made in your unit, which is not reflected in your manual, see your TORO Distributor or his Authorized TORO Service Dealer for information and part numbers.

COUNTRIES OTHER THAN THE UNITED STATES OR CANADA

Customers who have purchased TORO products exported from the United States or Canada should contact their Toro Distributor (Dealer) to obtain guarantee policies for your country, province or state. If for any reason you are dissatisfied with your Distributor's service or have difficulty obtaining guarantee information, contact the TORO importer. If all other remedies fail, you may contact us at The Toro Company.

MAINTENANCE RECORD

Date								

Compliance with Radio Interference Regulations Certified.
Certifie Conforme au Reglement sur le Brouillage Radioelectrique.

Litho in U.S.A.

MAINTENANCE RECORD

Date								

MAINTENANCE RECORD

Date								