FORM NO. 3315–991

TORO®

MODEL NO. 20431–3900001 & UP

PARTS CATALOG

21" RECYCLER®
Mower

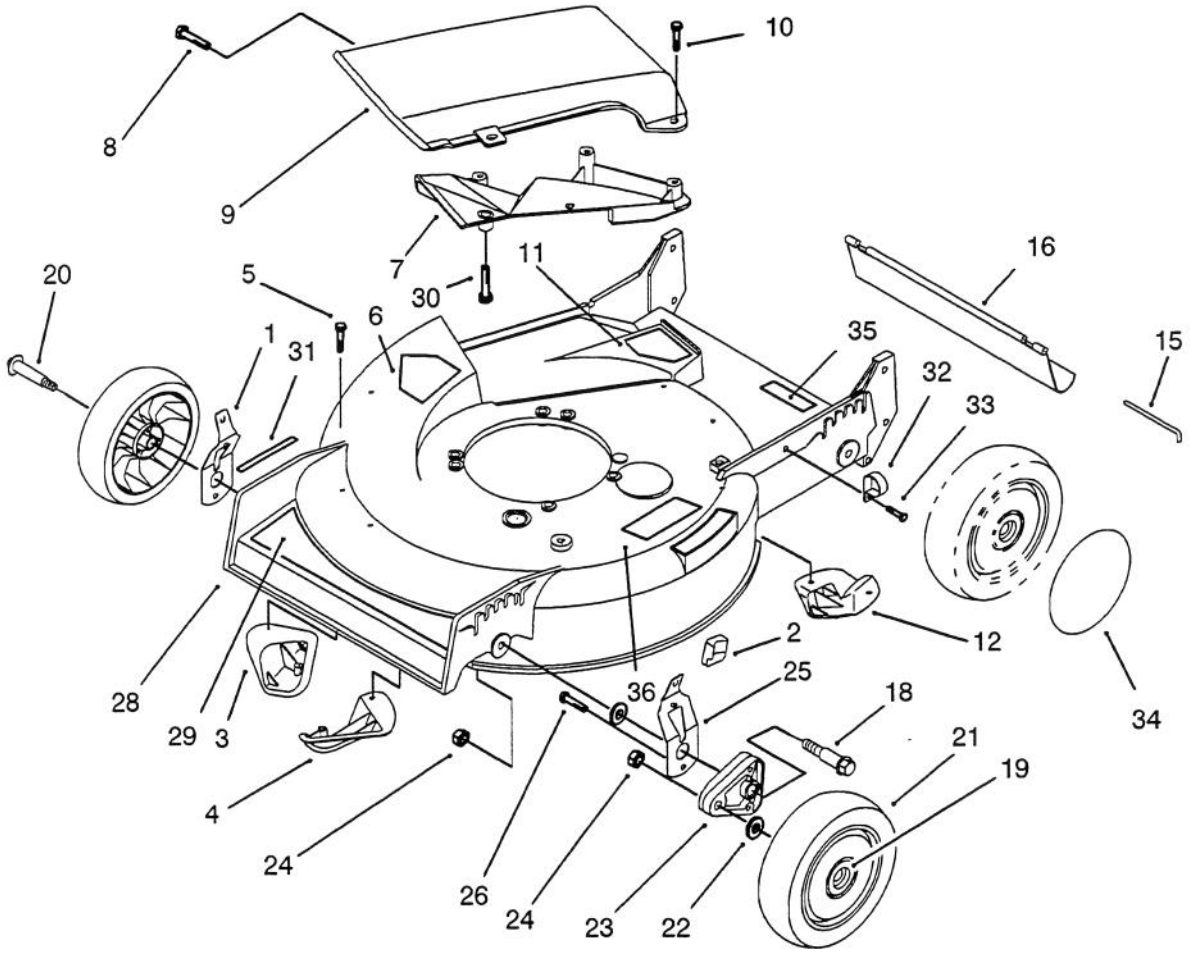

C–1411

HOUSING ASSEMBLY

Ref. No.	Part No.	Description	No. Used
1	71–0560	Spring Arm Ass'y – R.H.	2
2	25–7740	Knob – Spring Arm	4
3	92–1730	Plate – Kicker Rt. Front	1
4	92–1720	Plate – Kicker Left Front	1
5	32144-111	Screw – Pan Hd.	6
6	39–5770	Decal – Danger	1
7		Deflector – Recycler	1
8	46–6810	Screw – Hex Washer Hd. Thread Forming	1
9	14–4069	Cover Assembly Incl. Ref. #7 & 30)	1
10	46–6811	Screw w/Washer	3
11	82–8450	Decal – Danger	1
12	92–1660	Plate – Kicker Left Rear	1
15	33–3208	Rod – Shield	1
16	44–0580	Shield – Rear	1
18	66–0560	Screw – Pivot	4
19	27–6250	Bushing – Wheel	8
20	27–6232	Bolt – Wheel	4

Ref. No.	Part No.	Description	No. Used
21	11–9509	Wheel & Tire Assembly (Incl. Ref. #19)	4
22	40–1940	Washer – Wheel	8
23	66–0580	Arm – Pivot	4
24	3296–6	Nut – Lock	8
25	71–0570	Spring Arm Ass'y – L.H.	2
26	32144–85	Screw – Hex Hd. Cap	4
28	16–1579	Housing Assembly (Incl. Ref. #3–6, 11, 12, 31, 35, & 36)	1
29	92–2283	Decal – Deck	1
30		Screw – Pan Hd.	5
31	92–2279	Decal – H.O.C.	4
32	2412–83	R–Clamp	1
33	32144–112	Screw	1
34	91–2253	Cover – Wheel	1
35	92–1779	Decal – Warning	1
36	71–1280	Decal – Danger	1

© The TORO Company –1993
All Rights Reserved

TPS

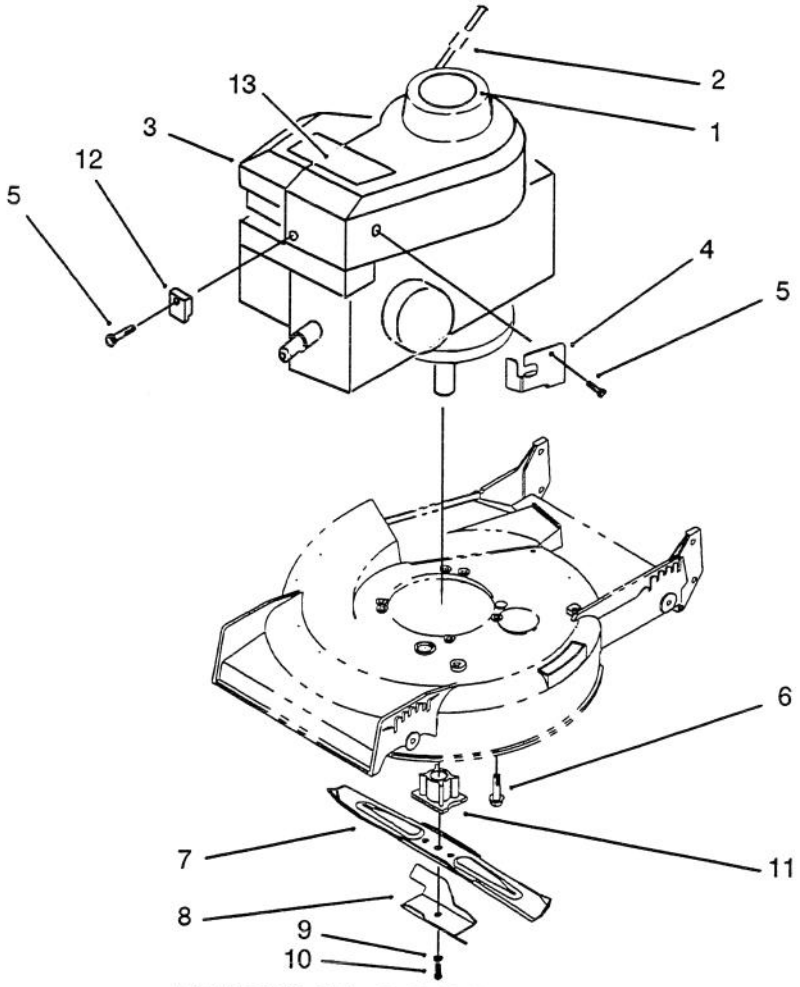

C–1416

ENGINE ASSEMBLY

Ref. No.	Part No.	Description	No. Used
1	92–2296	Decal – Engine	1
†2	2210–316	Stop – Rope	1
3		Engine	1
4	92–3149	Bracket – Cable	1
†5	86–7990	Screw –	2
6	32144–102	Screw – Thread Forming	3
7	14–9419	Blade – 21"	1

Ref. No.	Part No.	Description	No. Used
8	92–1599	Accelerator	1
9	3253–22	Lockwasher	1
10	26–0670	Screw – Blade	1
11	52–7320	Retainer – Blade	1
†12	86–7980	Clamp	1
13	92–2297	Decal – Engine	1

†Provided with Engine

3315–991

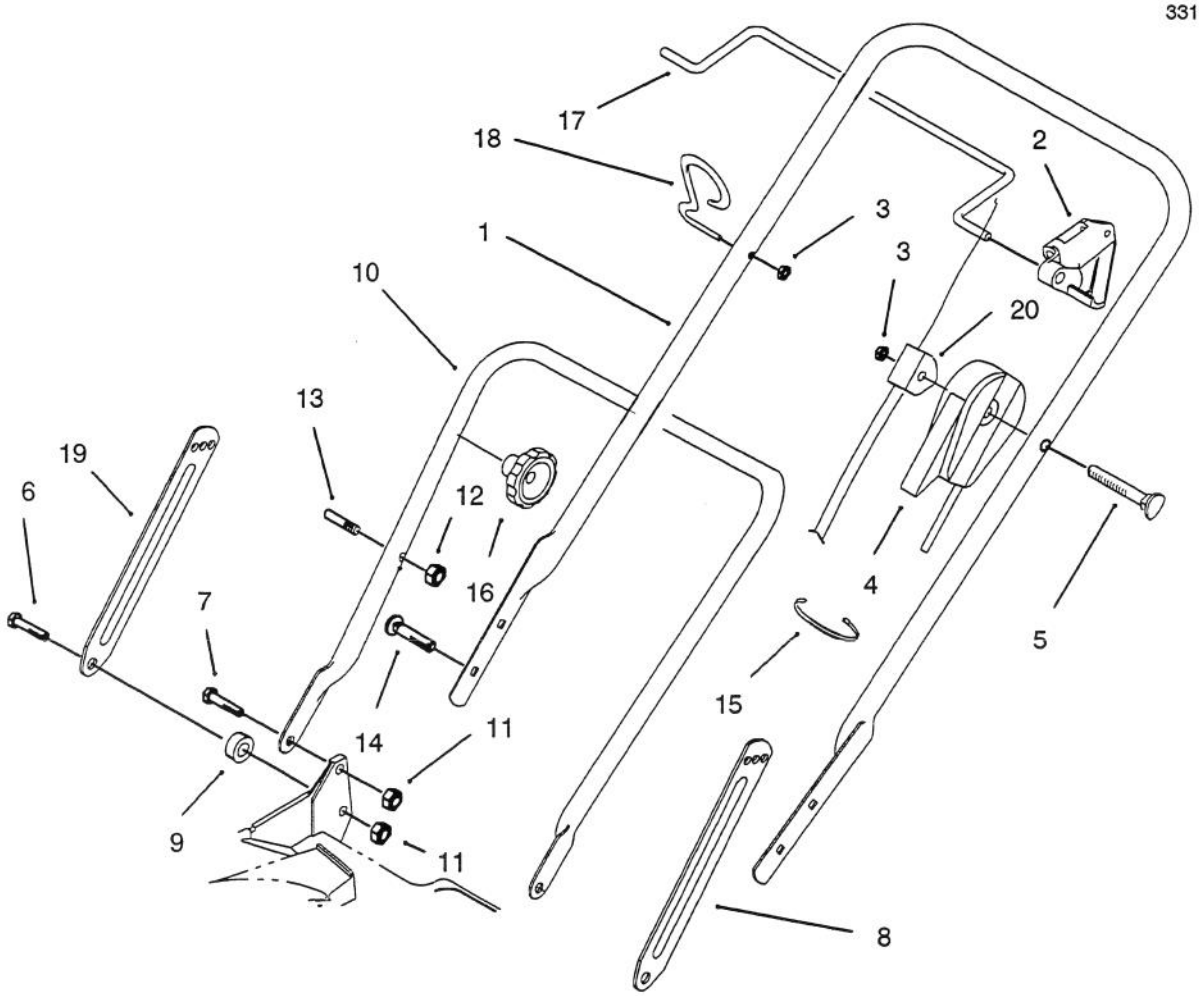

C–1415

HANDLE ASSEMBLY

Ref. No.	Part No.	Description	No. Used
1	92–3136	Handle – Upper	1
2	92–5412	Stop – Pivot	1
3	3296–73	Locknut	2
4	92–4068	Control – Throttle	1
5	92–2269	Screw – Handle	1
6	27–7210	Screw – Shoulder	2
7	27–7211	Screw – Shoulder	2
8	84–8360	Latch – Handle L.H.	1
9	3–3287	Spacer	2
10	82–5530	Lower Handle Assembly	1

Ref. No.	Part No.	Description	No. Used
11	3296–72	Locknut	4
†12	3296–47	Locknut	2
†13	49–2750	Pin – Handle	2
14	92–2260	Screw – Handle	2
15	3290–378	Tie – Cable	2
16	19–4050	Knob – Handle Release	2
17	92–3134	Bar – Control	1
18	86–9671	Guide – Rope	1
19	84–8400	Latch – Handle R.H.	1
20	92–4064	Cable – Brake	1

†Service Replacement Parts

3315–991

★ **REQUIRES SPECIAL TOOLS TO INSTALL. SEE REPAIR INSTRUCTION MANUAL.**

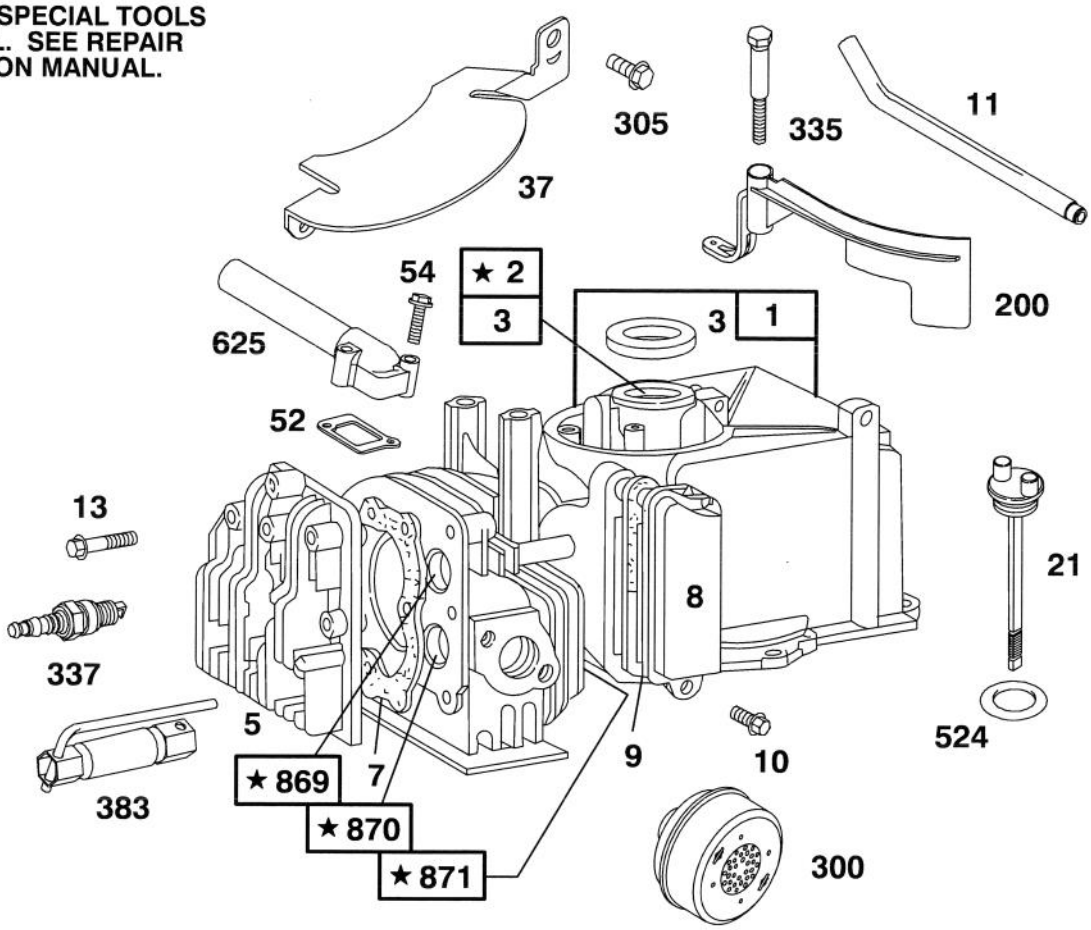

1019 LABEL KIT

Assemblies include all parts shown in frames.

358 GASKET SET

ENGINE BRIGGS & STRATTON MODEL 95902–3154–01

Ref. No.	Part No.	Description	No. Used
1	399164	Cylinder Assembly	1
2	293708	Bushing–Cylinder (Plain)	1
★3	299819	Seal–Oil	1
5	213942	Head–Cylinder	1
★7	272536	Gasket–Cylinder Head	1
8	495785	Breather–Valve Chamber	1
★9	272602	Gasket–Valve Cover	1
10	94621	Screw–Breather	1
11	231774	Tube–Breather	1
13	93111	Screw–Hex. Washer Head	1
21	281081	Plug–Oil Filler	1
37	223150	Guard–Flywheel	1
★52	270345	Gasket–Intake Elbow	1
54	93485	Screw–Intake Elbow Mtg.	1
200	281024	Blade–Governor	1
300	394569	Muffler–Exhaust (Lo-Tone)	1

Ref. No.	Part No.	Description	No. Used
305	94153	Screw–Blower Housing Mtg.	1
335	94732	Screw–Armature and Gov. Blade Mounting Sem	1
337	802592	Plug–Spark	1
358	298989	Gasket Set	1
383	89838	Wrench–Spark Plug	1
★524	271485	Seal–Filler Tube	1
625	298775	Tube–Fuel Intake	1
869	211172	Seat–Intake Valve (Std.)	1
870	211291	Seat–Exhaust Valve (Std.) **Note:** For Installation and Options See Repair Manual.	1
871	231348	Guide–Exhaust Valve **Note:** 63709 Guide–Intake Valve	1
1019	491082	Label Kit	1

★ Included in Gasket Set–Part No. 298989.

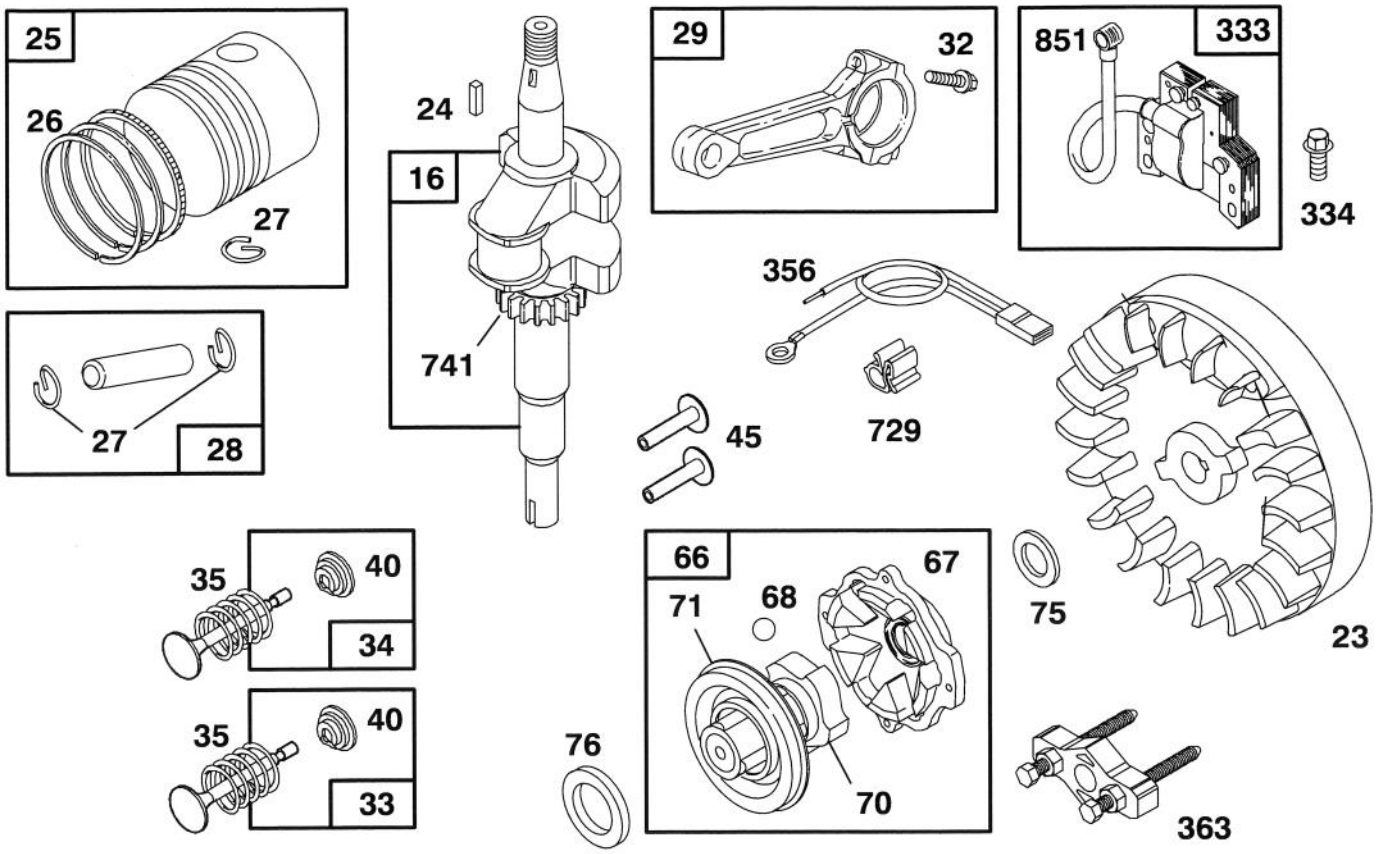

Assemblies include all parts shown in frames.

ENGINE BRIGGS & STRATTON MODEL 95902–3154–01

Ref. No.	Part No.	Description	No. Used
16	496069	Crankshaft	1
		Note: To Replace Crankshaft Gear Pin Order Part No. 230978.	
23	495046	Flywheel–Magneto	1
24	222698	Key–Flywheel	1
25	298904	Piston Assy. (Std.)	1
	298905	Piston Assy. (.010" O.S.)	
	298906	Piston Assy. (.020" O.S.)	
	298907	Piston Assy. (.030" O.S.)	
		PISTON RING SETS:	
26	298982	Ring Set–Piston (Std.)	1
	298983	Ring Set–Piston (.010" O.S.)	
	298984	Ring Set–Piston (.020" O.S.)	
	298985	Ring Set–Piston (.030" O.S.)	
27	26026	Lock–Piston Pin	1
28	298909	Pin Assy.–Piston (Std.)	1
	298908	Pin Assy.–Piston (.005" O.S.)	
29	294201	Rod Assy.–Connecting	1
		Note: For Conn. Rod With 020" Undersize Crankpin Bore–Order No. 296079.	

Ref. No.	Part No.	Description	No. Used
32	94699	Screw–Connecting Rod	1
33	296676	Valve–Exhaust	1
34	296677	Valve–Intake	1
35	260552	Spring–Intake Valve	1
40	93312	Retainer–Valve Spring	1
45	230173	Tappet–Valve	1
66	399671	Clutch Assembly–Rewind Starter	1
67	394897	Housing–Starter Clutch	1
68	63770	Ball–Clutch	1
70	298799	Ratchet–Rewind Starter	1
71	394506	Washer–Clutch Retainer	1
75	223047	Washer–Spring	1
76	68238	Washer–Ratchet Sealing	1
333	398593	Armature–Magneto	1
334	94731	Screw–Armature Mounting	1
356	398808	Wire–Ground	1
363	19069	Puller–Flywheel	1
729	280470	Clip–Wire	1
741	261533	Gear–Timing	1
851	221798	Terminal–Ignition Cable	1

3315–991

★ **REQUIRES SPECIAL TOOLS TO INSTALL. SEE REPAIR INSTRUCTION MANUAL.**

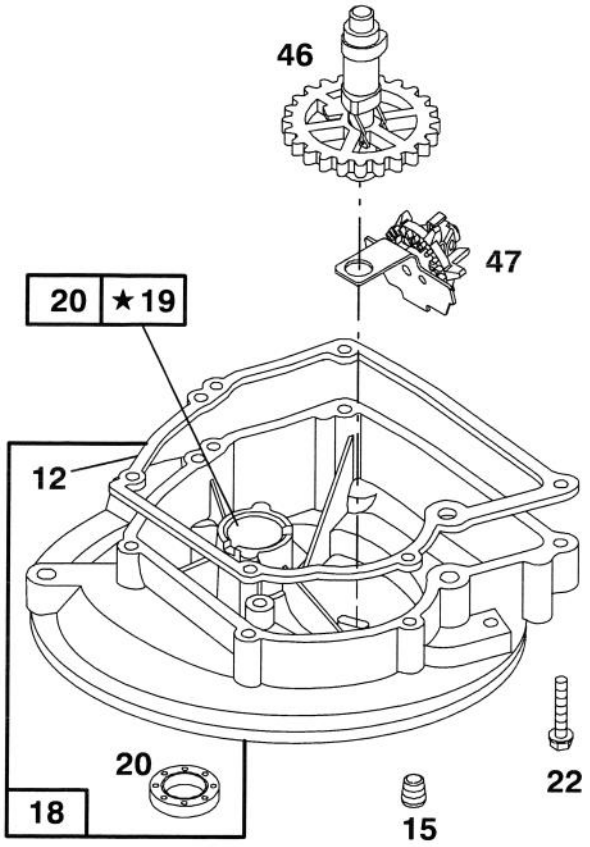

Assemblies include all parts shown in frames.

ENGINE BRIGGS & STRATTON MODEL 95902–3154–01

Ref. No.	Part No.	Description	No. Used
★12	270833	Gasket–Crankcase (.015" Thick, Standard)	1
★	270895	Gasket–Crankcase (.005" Thick)	1
★	270896	Gasket–Crankcase (.009" Thick)	1
15	94720	Plug–Oil Drain	1
18	395384	Sump–Engine	1
19	293709	Bushing–Engine Sump (Plain)	1
20	391483	Seal–Oil	1
22	94607	Screw–Mtg. Sem	1
46	493747	Gear–Cam	1
47	491688	Oil Slinger Gear and Bracket	1

★ Included in Gasket Set–Part No. 298989.

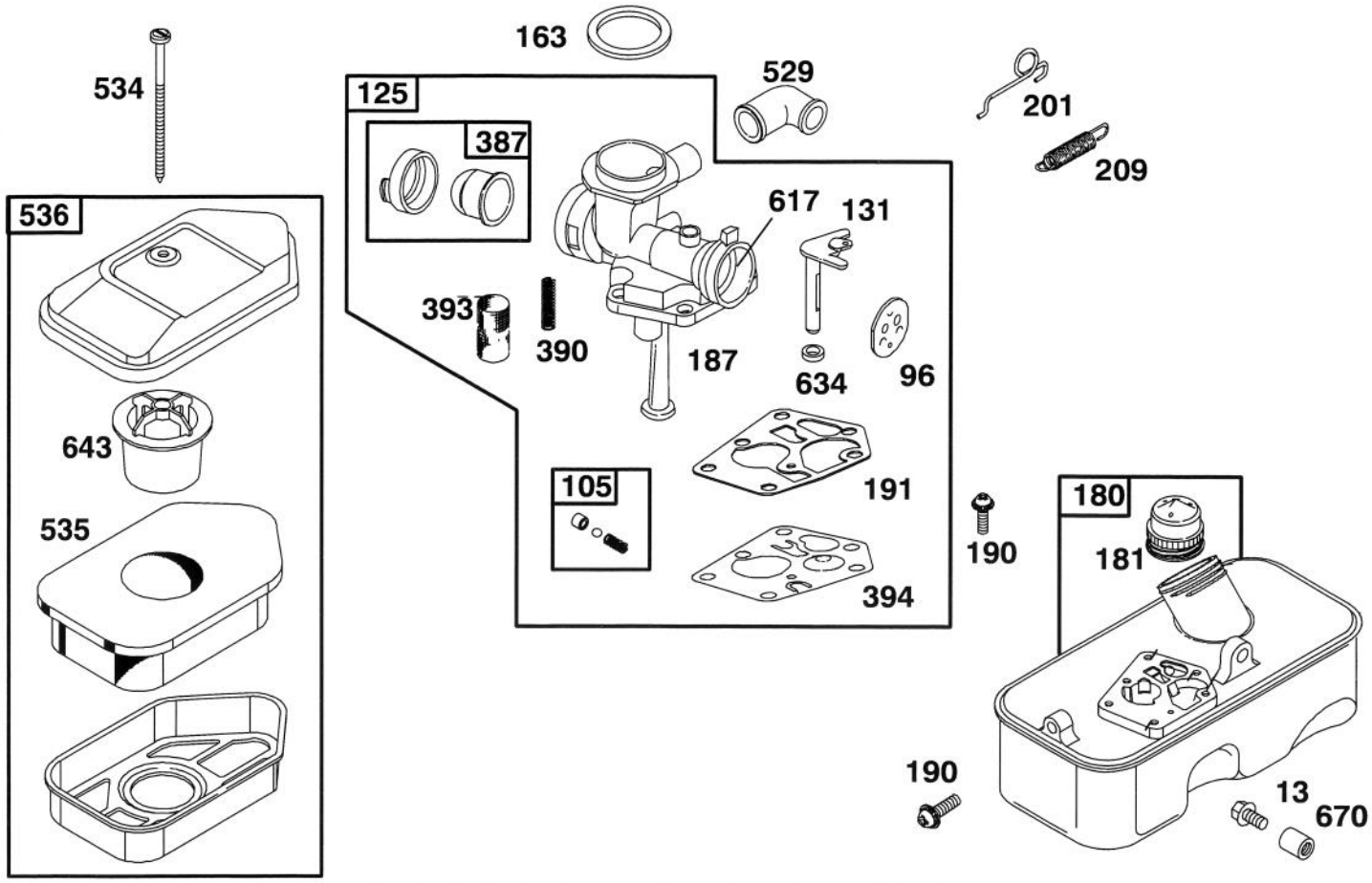

Assemblies include all parts shown in frames.

ENGINE BRIGGS & STRATTON MODEL 95902–3154–01

Ref. No.	Part No.	Description	No. Used
13	93111	Screw–Hex. Washer Hd.	1
96	224412	Valve–Throttle	1
105	494409	Needle Valve Seat Assy.	1
125	494775	Carburetor Assembly	1
131	281047	Shaft and Lever–Throttle	1
★163	271139	Gasket–Air Cleaner Mtg.	1
180	494406	Tank Assembly–Fuel	1
181	493982	Cap–Fuel Tank	1
187	493981	Pipe–Fuel Pick-Up	1
190	93440	Screw–Fuel Tank Mtg.	1
191	272372	Gasket–Pump	1
201	262753	Link–Governor	1
209	262759	Spring–Governor	1

Ref. No.	Part No.	Description	No. Used
387	494408	Primer Bulb Assy.	1
390	262764	Spring–Diaphragm	1
393	262734	Screen–Jet	1
394	281028	Diaphragm–Carburetor	1
529	67838	Grommet–Breather	1
534	93865	Screw–Air Cleaner	1
535	272235	Element–Air Cleaner	1
536	493492	Cleaner Assembly–Air	1
617	270344	Seal–Fuel Intake Tube	1
634	280566	Seal–Throttle Shaft	1
643	280972	Cup–Air Cleaner	1
670	94038	Spacer–Fuel Tank	1

★ Included in Gasket Set–Part No. 298989.

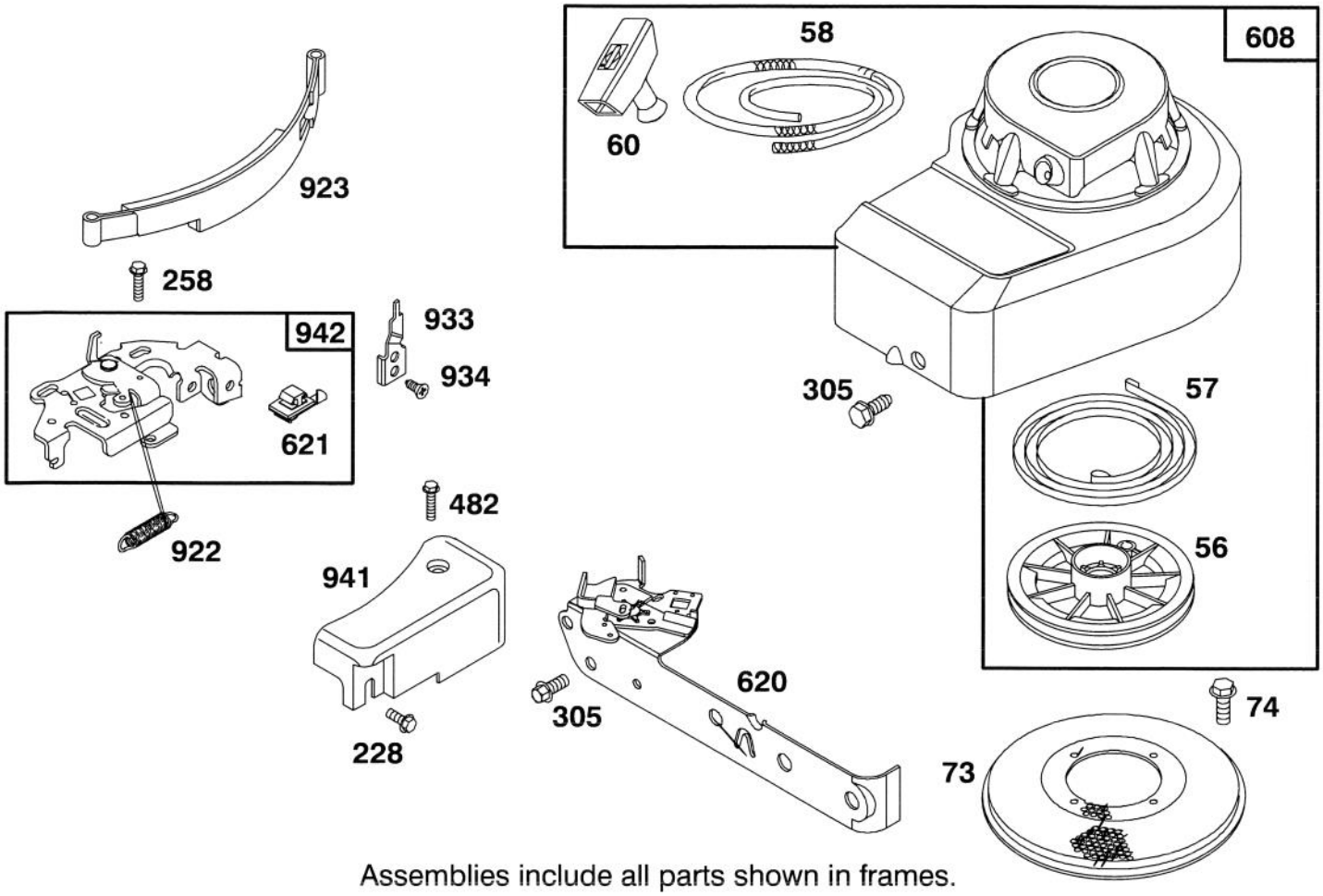

Assemblies include all parts shown in frames.

ENGINE BRIGGS & STRATTON MODEL 95902–3154–01

Ref. No.	Part No.	Description	No. Used
56	280439	Pulley–Rewind Starter	1
57	490179	Spring–Rewind Starter	1
58	280406	Rope–Rewind Starter	1
60	393152	Grip–Starter Rope	1
73	221661	Screen–Rewind Starter	1
74	93758	Screw–Sem	1
228	93758	Screw–Hex. Head	1
258	94018	Screw–Sem (Bracket to Cylinder)	1
305	94153	Screw–Blower Housing Mtg.	1

Ref. No.	Part No.	Description	No. Used
482	93621	Screw–Sem	1
608	494291	Starter Assy.–Rewind	1
620	495486	Plate–Carburetor Control	1
621	396847	Switch–Stop	1
922	261647	Spring–Band Brake	1
923	394867	Brake Assembly–Band	1
933	223448	Pivot–Band Brake	1
934	94037	Screw–Band Brake Pivot	1
941	281285	Cover–Linkage	1
942	493248	Bracket Assembly–Lever	1

TORO PART NUMBER INDEX

Part No.	Description	Pg. No.	Ref. No.	Qty.
3–3287	Spacer	3	9	2
11–9509	Wheel & Tire Assembly	1	21	4
14–4069	Cover Assembly	1	9	1
14–9419	Blade – 21	2	7	1
16–1579	Housing Assembly	1	28	1
19–4050	Knob – Handle Release	3	16	2
25–7740	Knob – Spring Arm	1	2	4
26–0670	Screw – Blade	2	10	1
27–6232	Bolt – Wheel	1	20	4
27–6250	Bushing – Wheel	1	19	8
27–7210	Screw – Shoulder	3	6	2
27–7211	Screw – Shoulder	3	7	2
33–3208	Rod – Shield	1	15	1
39–5770	Decal – Danger	1	6	1
40–1940	Washer – Wheel	1	22	8
44–0580	Shield – Rear	1	16	1
46–6810	Screw – Hex Washer Hd.	1	8	1
46–6811	Screw w/Washer	1	10	3
49–2750	Pin – Handle	3	13	2
52–7320	Retainer – Blade	2	11	1
66–0560	Screw – Pivot	1	18	4
66–0580	Arm – Pivot	1	23	4
71–0560	Spring Arm Ass'y – R.H.	1	1	2
71–0570	Spring Arm Ass'y – L.H.	1	25	2
71–1280	Decal – Danger	1	36	1
82–5530	Lower Handle Assembly	3	10	1
82–8450	Decal – Danger	1	11	1
84–8360	Latch – Handle L.H.	3	8	1
84–8400	Latch – Handle R.H.	3	19	1
86–7980	Clamp	2	12	1
86–7990	Screw –	2	5	2
86–9671	Guide – Rope	3	18	1
91–2253	Cover – Wheel	1	34	1
92–1599	Accelerator	2	8	1
92–1660	Plate – Kicker Left Rear	1	12	1
92–1720	Plate – Kicker Left Front	1	4	1
92–1730	Plate – Kicker Rt. Front	1	3	1
92–1779	Decal – Warning	1	35	1
92–2260	Screw – Handle	3	14	2
92–2269	Screw – Handle	3	5	1
92–2279	Decal – H.O.C.	1	31	4
92–2283	Decal – Deck	1	29	1
92–2296	Decal – Engine	2	1	1
92–2297	Decal – Engine	2	13	1
92–3134	Bar – Control	3	17	1
92–3136	Handle – Upper	3	1	1
92–3149	Bracket – Cable	2	4	1
92–4064	Cable – Brake	3	20	1
92–4068	Control – Throttle	3	4	1
92–5412	Stop – Pivot	3	2	1
2210–316	Stop – Rope	2	2	1
2412–83	R–Clamp	1	32	1
3253–22	Lockwasher	2	9	1
3290–378	Tie – Cable	3	15	2
3296–6	Nut – Lock	1	24	8
3296–47	Locknut	3	12	2
3296–72	Locknut	3	11	4
3296–73	Locknut	3	3	2
32144–85	Screw – Hex Hd. Cap	1	26	4
32144–102	Screw – Thread Forming	2	6	3
32144-111	Screw – Pan Hd.	1	5	6
32144–112	Screw	1	33	1

OPTIONAL EQUIPMENT

Recycler Side Discharge Kit .... Model No. 59189
Wear Plate Kit ..... Part No. 49–4080
Recycler Bagging Kit ..... Model No. 59179

*Not Illustrated

PRODUCT CHANGES

In an effort to make improvements available to TORO owners as quickly as possible, minor changes are incorporated into Toro's products from time to time that do not become immediately shown in the Parts Catalog. If such a change has been made in your unit, which is not reflected in your manual, see your TORO Distributor or his Authorized TORO Service Dealer for information and part numbers.

COUNTRIES OTHER THAN THE UNITED STATES OR CANADA

Customers who have purchased TORO products exported from the United States or Canada should contact their Toro Distributor (Dealer) to obtain guarantee policies for your country, province or state. If for any reason you are dissatisfied with your Distributor's service or have difficulty obtaining guarantee information, contact the TORO importer. If all other remedies fail, you may contact us at The Toro Company.

MAINTENANCE RECORD

Date								

Compliance with Radio Interference Regulations Certified.
Certifie Conforme au Reglement sur le Brouillage Radioelectrique.

Litho in U.S.A.

MAINTENANCE RECORD

Date								

MAINTENANCE RECORD

Date								