Form No. 3329-829 Rev B

Crosscut Position Kit

For Groundsmaster 4500-D

Model No. 30832

Installation Instructions

Installation

1. Position the machine on a level surface, lower the cutting decks to the floor, shut the engine off and engage the parking brake.
2. Remove the (4) 5/16 inch x 5/8 inch flange bolts securing the floor plate to the frame (Figure 1). Remove the floor plate.

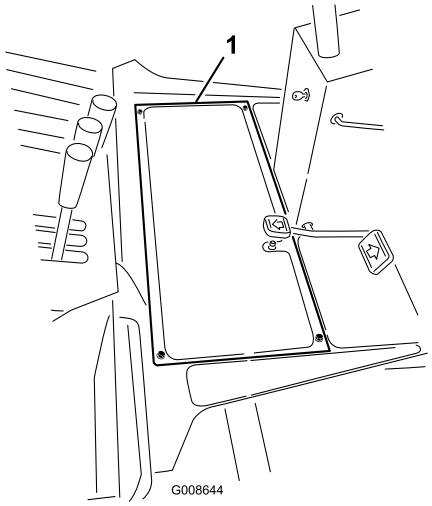

Figure 1

1. Floor plate

3. Using the dimensions shown in Figure 2, locate, mark and drill a 13/16 inch diameter hole through the floor plate and foot tread.

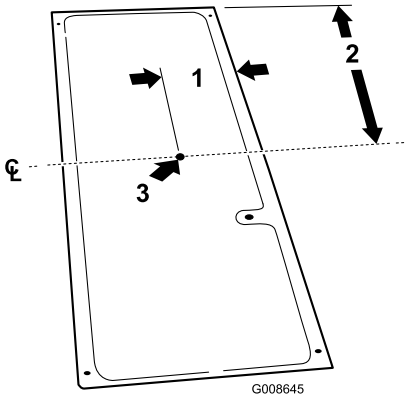

Figure 2

1. 4–1/2 inches
2. 15–7/8 inches
3. 13/16 inch diameter hole

4. Remove the front center deck from the traction unit as follows:
   A. Disconnect and remove the hydraulic motor from the deck. Cover the top of the deck spindle to protect it from contamination.
   B. Remove the lynch pin securing the deck carrier frame to the lift arm pivot pin.
   C. Roll the cutting deck away from the traction unit.
5. Using the dimensions shown in Figure 3, locate, mark and drill (2) 7/32 inch diameter holes in the top of the front frame tube.

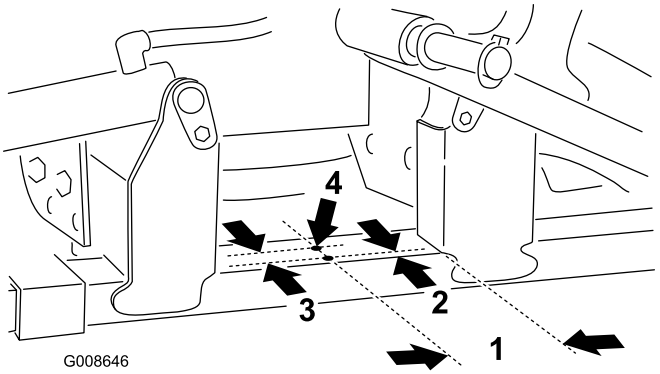

Figure 3

1. 4–53/64 inches
2. 7/16 inch
3. 1–3/8 inches
4. 7/32 inch diameter

6. Mount the spring bracket to the top of the frame tube with (2) ¼ inch self tapping flange bolts (Figure 4).

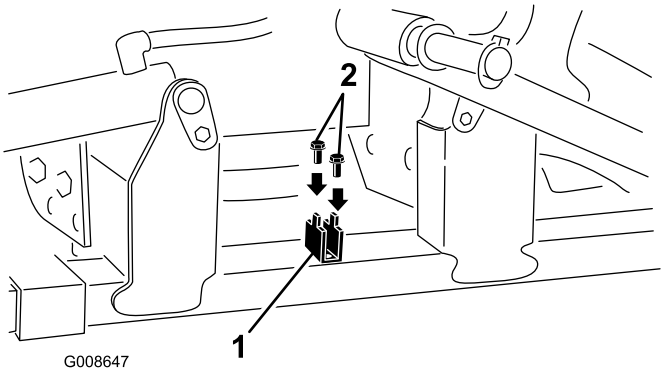

Figure 4

1. Spring bracket
2. Self tapping bolt

© 2008—The Toro® Company
8111 Lyndale Avenue South
Bloomington, MN 55420

Register at www.Toro.com.

Original Instructions (EN)
Printed in the USA.
All Rights Reserved

7. Reposition the fittings on the #4 and #5 cutting deck lift cylinders so the hoses are routed toward the middle of the machine (Figure 5). Cable tie the hoses together to prevent any interference (2 ties each).

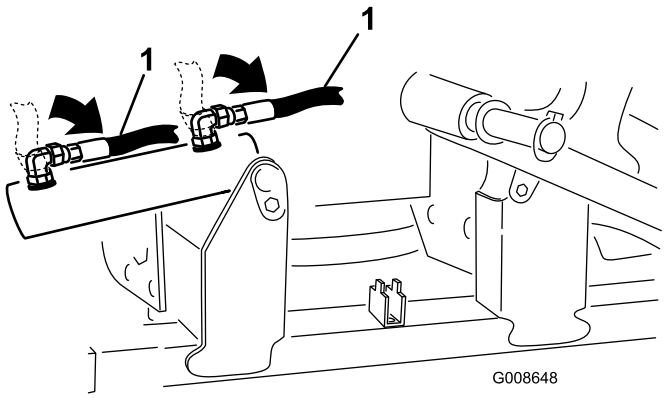

Figure 5

1. Cutting deck lift cylinder fittings and hoses (#5 cylinder shown)

8. Remove the flange head screws and nuts securing the #4 and #5 lift cylinder pins to the frame (Figure 6).

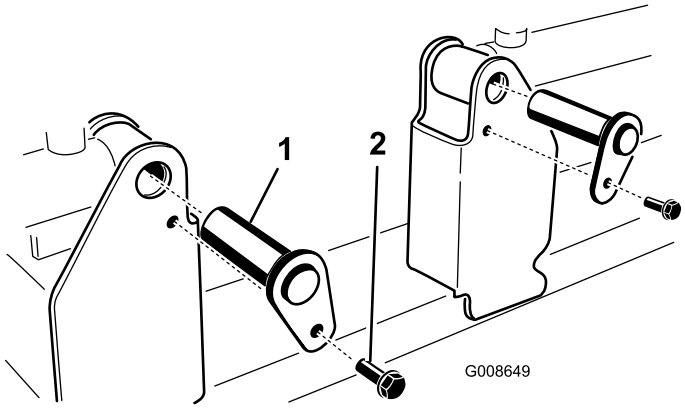

Figure 6

1. Lift cylinder pin
2. Flange head screw

9. Remove the lift cylinder pins securing the #4 and #5 lift cylinders to the frame (Figure 6).

10. Position a cylinder stop bracket onto each cylinder while aligning the mounting holes with the cylinder mounting holes (Figure 7).

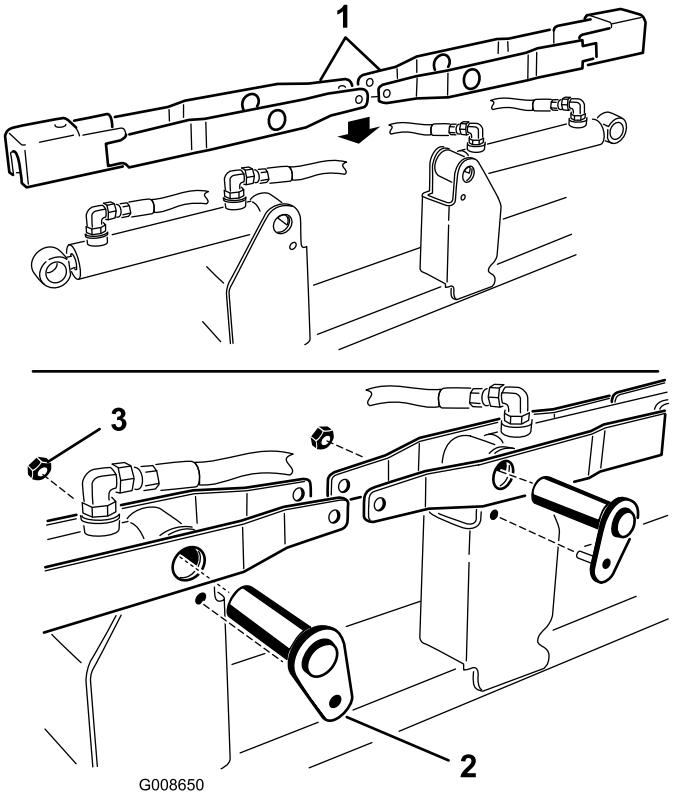

Figure 7

1. Cylinder stop bracket
2. New cylinder pin
3. Flange nut

11. Secure the cylinder stop brackets and the cylinders to the frame with new cylinder pins (Figure 7).

12. Secure each cylinder pin to the frame with a 5/16 inch flange nut (Figure 7). Make sure the cylinder stop brackets pivot freely.

13. Place the washer and spring onto the multi-holed (shorter) end of the turnaround shaft (Figure 8).

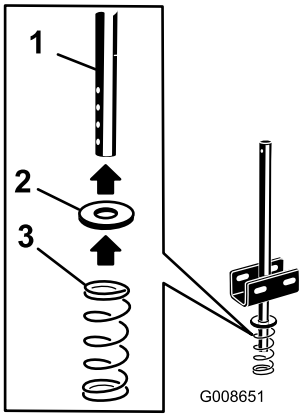

Figure 8

1. Turnaround shaft
2. Washer
3. Spring

14. Position the longer end of the turnaround shaft between the cylinder stop brackets until the shaft bracket holes align with the cylinder stop bracket hole (Figure 8). Make sure the spring rests on the spring bracket.

15. Mount the cylinder stop brackets to the turnaround shaft bracket with (2) shoulder bolts, 7/8 inch x ¼" inch thick spacers and flange nuts. Position the components as shown in Figure 9.

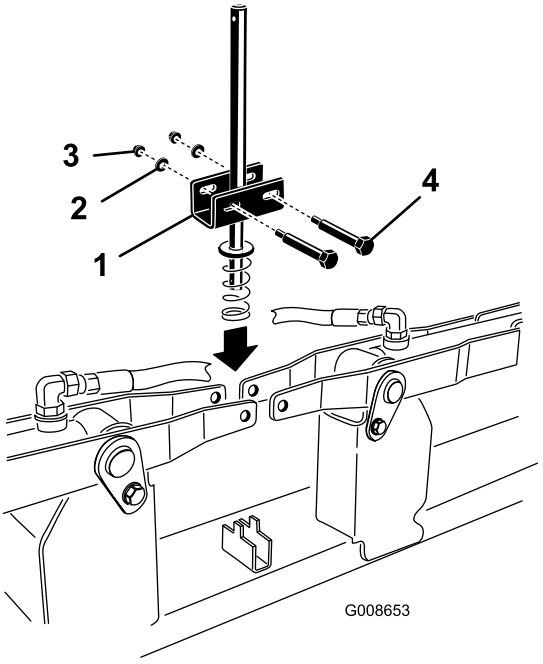

Figure 9

1. Turnaround shaft bracket
2. Spacer
3. Flange nut
4. Shoulder bolts

16. Press the floor plate bushing into the hole in the floor plate (Figure 10).

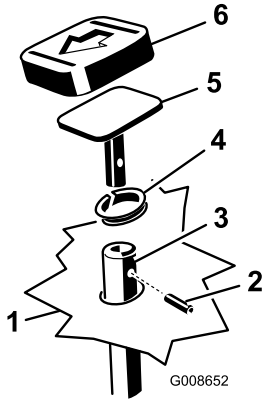

Figure 10

1. Floor plate
2. Roll pin
3. Turnaround shaft
4. Floor plate bushing
5. Pedal
6. Pedal pad

17. Place the floor plate w/bushing over the turnaround shaft and into mounting position (Figure 10). Secure the floor plate to the frame with the (4) flange bolts previously removed.

18. Insert the pedal mounting pin into the end of turnaround shaft (Figure 10). Rotate the pedal until it is parallel to the floor plate and the pedal holes align with the shaft hole.

19. Secure the pedal to the shaft with a roll pin (Figure 10).

20. Affix the pedal pad to the top of the pedal (Figure 10).

21. Using the dimensions shown in Figure 11, locate and affix the operation decal to the lower left rear corner of the steering tower.

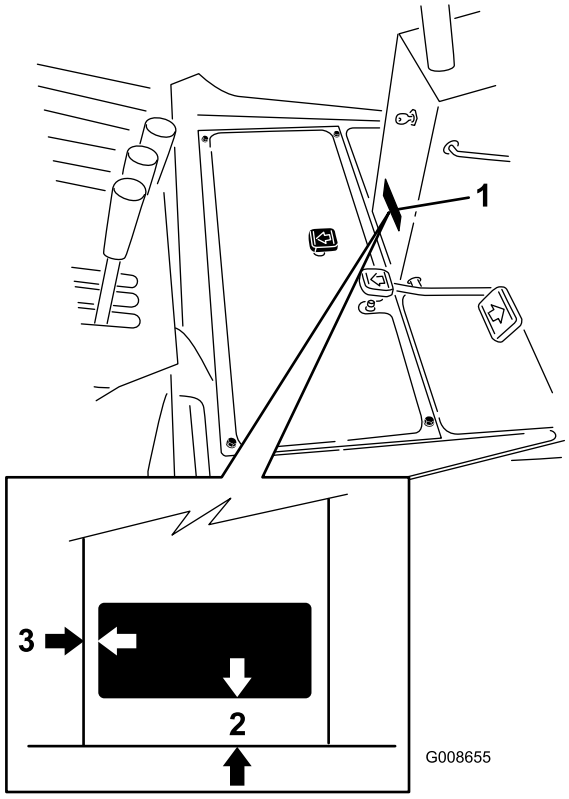

Figure 11

1. Operation decal
2. 2–3/4 inches
3. 13/32 inch

22. While compressing the spring, insert the hair pin cotter into the second hole from the bottom of the shaft (Figure 12). To change the spring tension, move the hair pin cotter to another position on the shaft.

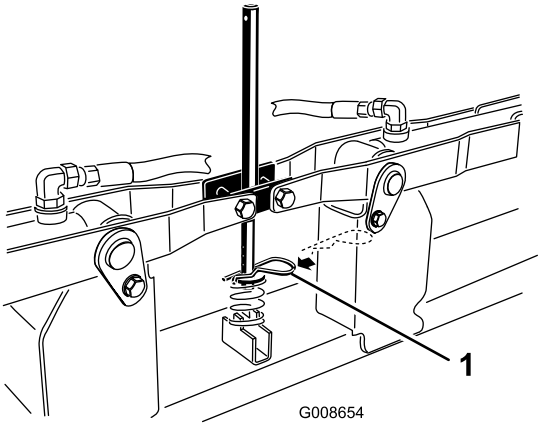

Figure 12

1. Hair pin cotter

Operation

Transport Position

To lift the front 2 front outboard cutting units (#4 & #5) to the fully raised position (transport), you must step on the pedal every time you pull back on the center lift lever (Figure 13 A).

Turn-around Position

To raise the front 2 outboard cutting units (#4 & #5) to the turn-around position, stepping on the pedal is not required. Pull back on the center lift lever until they both stop (Figure 13 B).

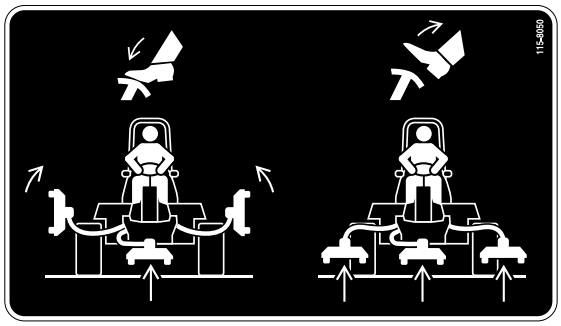

Figure 13

A B