Form No. 3360-711 Rev A

TX 427 Compact Utility Loader

Model No. 22321—Serial No. 280000001 and Up
Model No. 22321G—Serial No. 280000001 and Up
Model No. 22322—Serial No. 290000001 and Up

Setup Instructions

Charging the Battery

Warning

CALIFORNIA
Proposition 65 Warning

Battery posts, terminals, and related accessories contain lead and lead compounds, chemicals known to the State of California to cause cancer and reproductive harm. Wash hands after handling.

1. Open the rear access cover.
2. Connect a charger to the battery (Figure 1) and charge it for a minimum of 1 hour at 6 to 10 amps. Do not overcharge the battery.

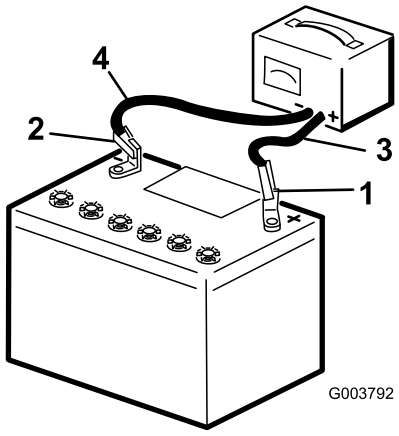

Figure 1

1. Positive post
2. Negative post
3. Charger red (+) wire
4. Charger black (—) wire

Charging the battery produces gasses that can explode.

Never smoke near the battery and keep sparks and flames away from battery.

3. When the battery is fully charged, unplug the charger from the electrical outlet, then disconnect the charger leads from the battery posts (Figure 1).
4. Close the rear access cover.

Checking Fluid Levels

Before starting the engine for the first time, check the engine oil and hydraulic fluid levels. Refer to the *Operator's Manual* for more information.

Setting the Engine RPM (CE Only)

If you are setting up this machine for use in the European Community, you need to permanently adjust the engine speed so that it does not run above 3300 RPM, as follows:

1. Start the engine and run it at half throttle for 5 to 10 minutes to warm it up.

   Important: The engine must be warm before making this adjustment.

2. Move the throttle lever to the Fast position.
3. Check the engine speed on the tachometer.

   It should be around 3600 RPM.

4. Loosen the jam nut securing the high idle adjusting screw on the engine (located on the throttle/choke control linkage—Figure 2).

© 2008—The Toro® Company
8111 Lyndale Avenue South
Bloomington, MN 55420

Register at www.Toro.com.

CE

Original Instructions (EN)
Printed in the USA
All Rights Reserved

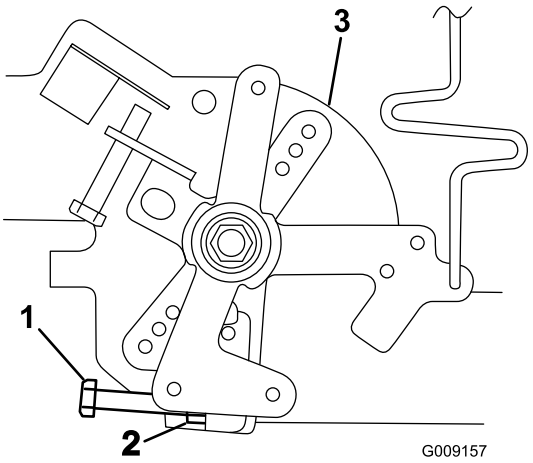

Figure 2

1. High idle adjusting screw
2. Jam nut
3. Throttle/choke control linkage

5. Turn the high idle adjusting screw outward to lower the RPM to between 3200 and 3300 RPM.

   Important: If you exceed 3300 RPM, the engine will not be in compliance with CE regulations and cannot be legally sold or used in the European Community.

6. Secure the screw with the jam nut, checking the engine RPM again as you do so.
7. Slide the small aluminum tube over the high idle adjusting screw and jam nut.
8. Crimp the tube down to the screw shaft with a pliers between the screw head and the jam nut so that the jam nut cannot be loosened in the future.

   Important: The tube must be fully over the jam nut to prevent access to it.

Converting the Hood Latch (CE Only)

If you are setting up this machine for use in the European Community, you need to change the hood latch to a slotted latch, as follows:

1. Stop the engine, lower the loader arms, and remove the key.
2. Open the hood.
3. Remove the bolt and washer securing the hood latch handle.

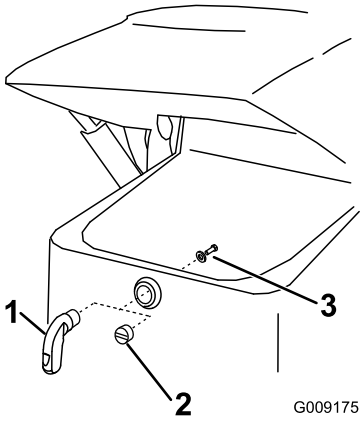

Figure 3

1. Hood latch handle
2. Slotted hood latch
3. Bolt and washer

4. Remove and discard the hood latch handle.
5. Insert the slotted hood latch into the opening and secure it with the bolt and washer you removed previously.
6. Close the hood and check the operation of the hood latch using the hood latch key.
7. Give the key to the customer upon delivery.

Installing the Production Year Decal (CE Only)

If you are setting up this machine for use in the European Community, you need to add the production year decal to the machine. Install the decal just above the serial plate on the machine, following the instructions provided on the decal.