Form No. 3360-734 Rev A

# CCR Powerlite® Snowthrower

**Model No. 38172—Serial No. 290000001 and Up**
**Model No. 38182—Serial No. 290000001 and Up**

**Operator's Manual**

# Introduction

Read this information carefully to learn how to operate and maintain your product properly and to avoid injury and product damage. You are responsible for operating the product properly and safely.

You may contact Toro directly at www.Toro.com for product and accessory information, help finding a dealer, or to register your product.

Whenever you need service, genuine Toro parts, or additional information, contact an Authorized Service Dealer or Toro Customer Service and have the model and serial numbers of your product ready. Figure 1 identifies the location of the model and serial numbers on the product. Write the numbers in the space provided.

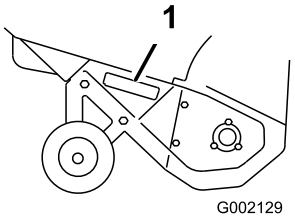


**Figure 1**

1. Model and serial number location

**Model No.** _____

**Serial No.** _____

This manual identifies potential hazards and has safety messages identified by the safety alert symbol (Figure 2), which signals a hazard that may cause serious injury or death if you do not follow the recommended precautions.



**Figure 2**

1. Safety alert symbol

This manual uses 2 words to highlight information. **Important** calls attention to special mechanical information and **Note** emphasizes general information worthy of special attention.

**Warning**

**CALIFORNIA**
**Proposition 65 Warning**

**The engine exhaust from this product contains chemicals known to the State of California to cause cancer, birth defects, or other reproductive harm.**

**Important: This engine is not equipped with a spark arrester muffler. It is a violation of California Public Resource Code Section 4442 to use or operate this engine on any forest-covered, brush-covered, or grass-covered land. Other states or federal areas may have similar laws.**

This spark ignition system complies with Canadian ICES-002.

**The enclosed *Engine Owner's Manual* is supplied for information regarding the US Environmental Protection Agency (EPA) and the California Emission Control Regulation of emission systems, maintenance, and warranty. Replacements may be ordered through the engine manufacturer.**

# Safety

Read and understand the contents of this manual before you start the engine.

⚠This is the safety alert symbol. It is used to alert you to potential personal injury hazards. Obey all safety messages that follow this symbol to avoid possible injury or death.

This snowthrower is capable of amputating hands and feet and of throwing objects. Failure to observe the following safety instructions could result in serious injury.

© 2008—The Toro® Company
8111 Lyndale Avenue South
Bloomington, MN 55420

Register at www.Toro.com.

Original Instructions (EN)
Printed in the USA
All Rights Reserved

# Training

- Read, understand, and follow all instructions on the machine and in the manual(s) before operating this unit. Be thoroughly familiar with the controls and the proper use of the equipment. Know how to stop the unit and disengage the controls quickly.
- Never allow children to operate the equipment. Never allow adults to operate the equipment without proper instruction.
- Keep the area of operation clear of all persons, particularly small children.
- Exercise caution to avoid slipping or falling.

# Preparation

- Thoroughly inspect the area where the equipment is to be used and remove all doormats, sleds, boards, wires, and other foreign objects.
- Do not operate the equipment without wearing adequate winter garments. Avoid loose fitting clothing that can get caught in moving parts. Wear footwear that will improve footing on slippery surfaces.
- Handle fuel with care; it is highly flammable.
  - Use an approved fuel container.
  - Never add fuel to a running engine or hot engine.
  - Fill fuel tank outdoors with extreme care. Never fill fuel tank indoors.
  - Never fill containers inside a vehicle or on a truck or trailer bed with a plastic liner. Always place containers on the ground, away from your vehicle, before filling.
  - When practical, remove gas-powered equipment from the truck or trailer and refuel it on the ground. If this is not possible, then refuel such equipment on a trailer with a portable container, rather than from a gasoline dispenser nozzle.
  - Keep the nozzle in contact with the rim of the fuel tank or container opening at all times, until refueling is complete. Do not use a nozzle lock-open device.
  - Replace gasoline cap securely and wipe up spilled fuel.
  - If fuel is spilled on clothing, change clothing immediately.
- Use extension cords and receptacles as specified by the manufacturer for all units with electric starting motors.
- Never attempt to make any adjustments while the engine is running (except when specifically recommended by manufacturer).
- Always wear safety glasses or eye shields during operation or while performing an adjustment or repair to protect eyes from foreign objects that may be thrown from the machine.

# Operation

- Do not put hands or feet near or under rotating parts. Keep clear of the discharge opening at all times.
- Exercise extreme caution when operating on or crossing gravel drives, walks, or roads. Stay alert for hidden hazards or traffic.
- After striking a foreign object, stop the engine, remove the ignition key, thoroughly inspect the snowthrower for any damage, and repair the damage before restarting and operating the snowthrower.
- If the unit should start to vibrate abnormally, stop the engine and check immediately for the cause. Vibration is generally a warning of trouble.
- Stop the engine whenever you leave the operating position, before unclogging the collector/impeller housing or discharge chute, and when making any repairs, adjustments or inspections.
- When cleaning, repairing, or inspecting the snowthrower, stop the engine and make certain that the rotor blades and all moving parts have stopped.
- Do not run the engine indoors, except when starting the engine and for transporting the snowthrower in or out of the building. Open the outside doors; exhaust fumes are dangerous.
- Exercise extreme caution when operating on slopes.
- Never operate the snowthrower without proper guards and other safety protective devices in place and working.
- Never direct the discharge toward people or areas where property damage can occur. Keep children and others away.
- Do not overload the machine capacity by attempting to clear snow at too fast a rate.
- Look behind and use care when backing up with the snowthrower.
- Disengage power to the collector/impeller when snowthrower is transported or not in use.
- Never operate the snowthrower without good visibility or light. Always be sure of your footing, and keep a firm hold on the handles. Walk; never run.
- Never touch a hot engine or muffler.

## Clearing a Clogged Discharge Chute

Hand contact with the rotating rotor blades inside the discharge chute is the most common cause of injury associated with snowthrowers. Never use your hand to clean out the discharge chute.

To clear the chute:

- **Shut the engine off!**
- Wait 10 seconds to be sure the impeller blades have stopped rotating.
- Always use a clean-out tool, not your hands.

## Maintenance and Storage

- Check all fasteners at frequent intervals for proper tightness to be sure the equipment is in safe working condition.
- Never store the machine with fuel in the fuel tank inside a building where ignition sources are present, such as hot water heaters, space heaters, or clothes dryers. Allow the engine to cool before storing in any enclosure.
- Always refer to the *Operator's Manual* for important details if the snowthrower is to be stored for an extended period.
- Maintain or replace safety and instruction labels, as necessary.
- Run the machine a few minutes after throwing snow to prevent freeze-up of the rotor blades.

## Toro Snowthrower Safety

The following list contains safety information specific to Toro products or other safety information that you must know.

- **Rotating rotor blades can injure fingers or hands.** Stay behind the handles and away from the discharge opening while operating the snowthrower. **Keep your face, hands, feet, and any other part of your body or clothing away from moving or rotating parts.**
- Before adjusting, cleaning, repairing, and inspecting the snowthrower, and before unclogging the discharge chute, **stop the engine, remove the key, and wait for all moving parts to stop.**
- **Before** leaving the operating position, stop the engine, remove the key, and wait for all moving parts to stop.
- If a shield, safety device, or decal is damaged, illegible, or lost, repair or replace it before beginning operation. Also, tighten any loose fasteners.
- **Do not** smoke while handling gasoline.
- **Do not** use the snowthrower on a roof.
- Do not touch the engine while it is running or soon after it has stopped because the engine may be hot enough to cause a burn.
- Perform only those maintenance instructions described in this manual. Before performing any maintenance, service, or adjustment, stop the engine and remove the key. If major repairs are ever needed, contact an Authorized Service Dealer.
- Do not change the governor settings on the engine.
- When storing the snowthrower for more than 30 days, drain the fuel from the fuel tank to prevent a potential hazard. Store fuel in an approved fuel container. Remove the key from the ignition switch before storing the snowthrower.
- Purchase only genuine Toro replacement parts and accessories.

# Safety and Instructional Decals

**Important:** **Safety and instruction decals are located near areas of potential danger. Replace damaged decals.**




**104-2767**

---

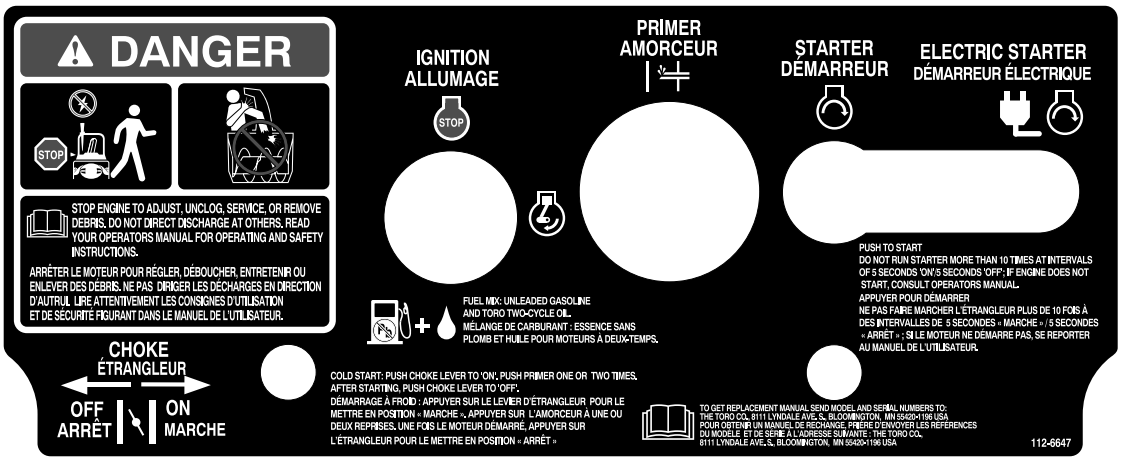


**112-6647 (model 38182 only)**

Reorder part no. 112-8101

---

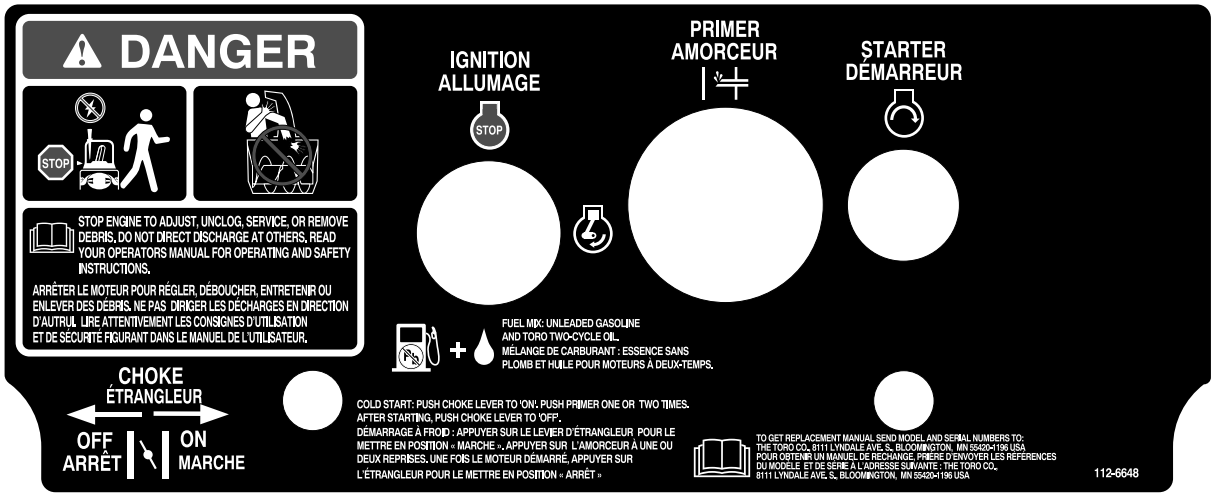


**112-6648 (model 38172 only)**

Reorder Part No. 112-8100

---

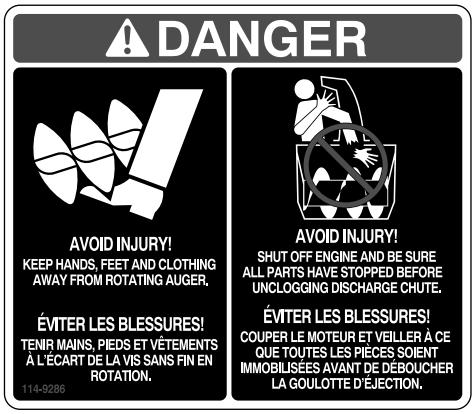


**114-9286**

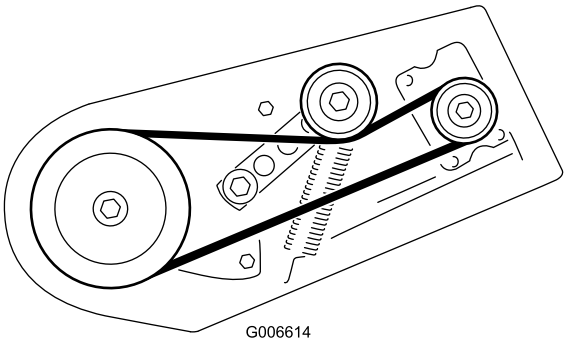


**Belt Routing Diagram**

# Setup

## Loose Parts

Use the chart below to verify that all parts have been shipped.

| Procedure | Description | Qty. | Use |
|---|---|---|---|
| **1.** | Oval-head bolts<br>Curved washers<br>Handle knobs | 2<br>2<br>2 | Install the handle. |
| **2.** | Discharge chute<br>Washers<br>Locknuts<br>Knob | 1<br>2<br>2<br>1 | Install the discharge chute. |

## 1. Installing the Handle

| | |
|---|---|
| 2 | Oval-head bolts |
| 2 | Curved washers |
| 2 | Handle knobs |

### Procedure

1. Position the ends of the upper handle on the inside of the lower handle and align the holes.
2. Insert the oval-head bolts into the aligned holes, with the bolt heads on the outside of the handle. (Figure 3).

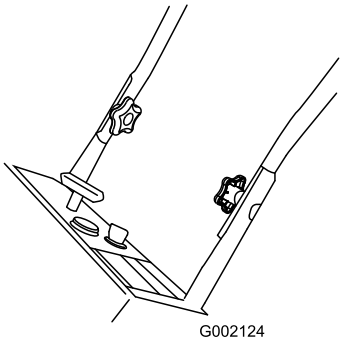


**Figure 3**

3. Install the curved washers and the handle knobs on the oval-head bolts and **tighten the knobs securely.**

# 2. Installing the Discharge Chute

| | |
|---|---|
| 1 | Discharge chute |
| 2 | Washers |
| 2 | Locknuts |
| 1 | Knob |

## Procedure

1. Position the holes in the sides of the discharge chute over the bolts ends on the sides of the chute handle. (Figure 4).

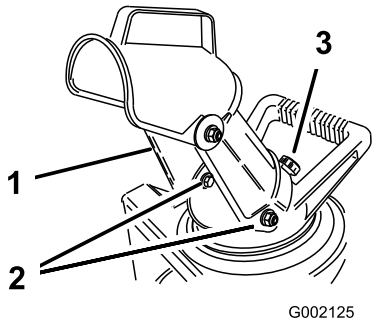


**Figure 4**

1. Discharge chute
2. Bolt ends
3. Knob

2. Secure the sides of the discharge chute with 2 washers and 2 locknuts.
3. Rotate the discharge chute to the upright position.
4. Install the knob **tightly** onto the bolt end at the rear of the discharge chute.

# Product Overview

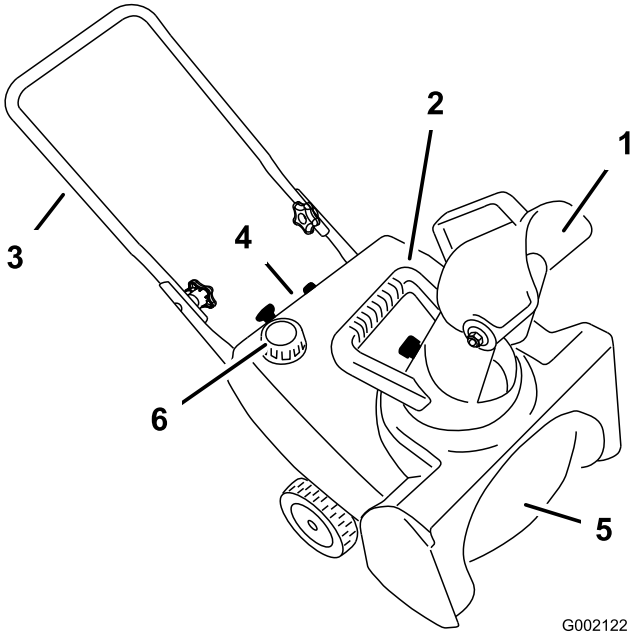


**Figure 5**

1. Discharge chute
2. Chute handle
3. Handle
4. Control panel
5. Rotor blade
6. Fuel tank

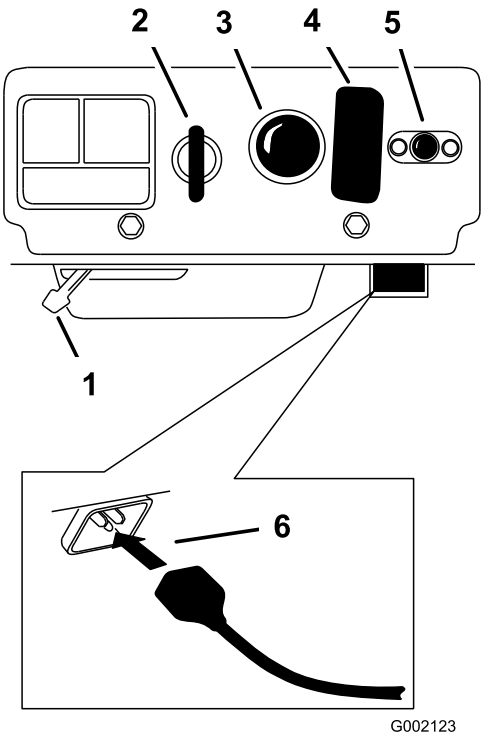


**Figure 6**

1. Choke lever
2. Key switch
3. Primer
4. Recoil start
5. Electric-start button (model 38182 only)
6. Power cord (model 38182 only)

# Operation

**Note:** Determine the left and right sides of the machine from the normal operating position.

**Gasoline is extremely flammable and explosive. A fire or explosion from gasoline can burn you and others.**

- **To prevent a static charge from igniting the gasoline, place the container and/or snowthrower on the ground before filling, not in a vehicle or on an object.**
- **Fill the tank outdoors when the engine is cold. Wipe up spills.**
- **Do not handle gasoline when smoking or around an open flame or sparks.**
- **Store gasoline in an approved fuel container, out of the reach of children.**

## Mixing the Gasoline and Oil

This snowthrower uses a 50:1 gasoline-to-oil mixture. Use **Toro 50:1 2-Cycle Oil (Fuel Stabilizer Added)** or an equivalent high-grade, NMMA TCW III-certified two-cycle oil.

**Important: To prevent engine damage, do not use automotive oil (such as SAE 30 or 10W30) or fuel mixed at the wrong gasoline-to-oil ratio.**

1. Pour a half US gallon (1.9 liters) of fresh, unleaded gasoline into an approved fuel container.
2. Add two-cycle oil to the gasoline according to the chart below (Figure 7):

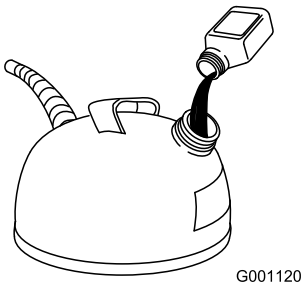


**Figure 7**

| 50:1 Gasoline-to-Oil Ratio Mixing Chart | |
|---|---|
| **Gasoline** | **Oil** |
| 1 US gallon (3.8 liters) | 2.6 ounces (80 ml) |
| 2 US gallons (7.6 liters) | 5.2 ounces (160 ml) |

3. Install the cap on the fuel container.
4. Shake the container to mix the gasoline and oil thoroughly.
5. Slowly remove the cap and add the remaining amount of gasoline.

   **Note:** Do not mix gasoline and oil in the fuel tank. Oil at room temperature mixes easier and more thoroughly than cold oil. Oil below 32°F (0°C) requires additional mixing.

## Filling the Fuel Tank

Fill the fuel tank with a fresh mixture of gasoline and oil mixed at the proper ratio (Figure 8).

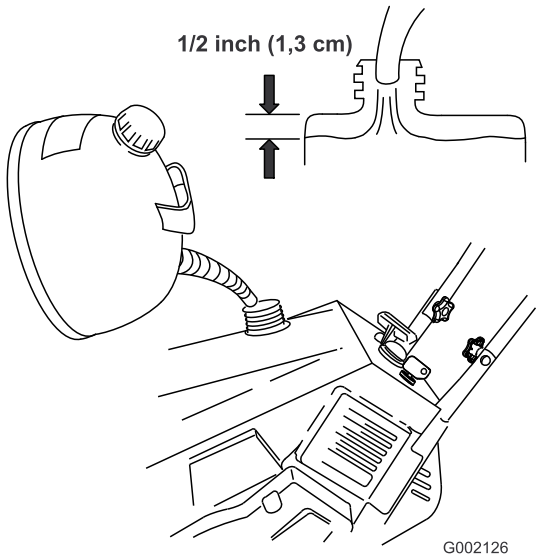


**Figure 8**

## Starting the Engine

1. Turn the ignition key clockwise to the On position.
2. Move the choke lever to the right.
3. Firmly push in the primer 2 times with your thumb, holding the primer in for a second before releasing it each time.
4. Start the engine by using either the electric start button (model 38182 only) or the recoil starter.

   **Using the recoil starter:**

   Hold the snowthrower handle with one hand and pull the recoil starter vigorously with the other hand.

**Using the electric starter (model 38182 only):**

A. Connect the power cord to the snowthrower and to a standard household power outlet and push the starter button.

**Important: Run the electric starter no more than 10 times at intervals of 5 seconds on, then 5 seconds off. *Running the electric starter extensively can overheat and damage it.* If the engine does not start after this series of attempts, wait at least 40 minutes to allow the starter to cool before attempting to start it again. If the engine does not start after the second series of attempts, take the snowthrower to an Authorized Service Dealer for service.**

B. When the engine starts, disconnect the power cord from the snowthrower and the outlet.

5. With the engine running, move the choke lever to the left slowly.

# Stopping the Engine

To stop the engine, turn the ignition key counterclockwise to the Off position.

# Adjusting the Discharge Chute

To adjust the discharge chute, move the chute handle and the chute deflector handle as shown (Figure 9).

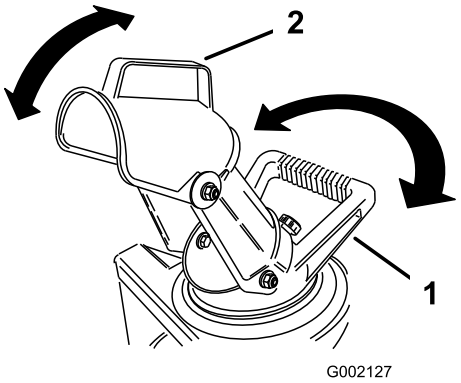


**Figure 9**

1. Chute handle
2. Chute deflector handle

# Preventing Freeze-up after Use

- Let the engine run for a few minutes to prevent moving parts from freezing. Stop the engine, wait for all moving parts to stop, and remove ice and snow from the snowthrower.
- With the engine off, pull the recoil starter handle several times and push the electric start button once (model 38182 only) to prevent the recoil and electric starters from freezing up.

# Operating Tips

**The rotor blades can throw stones, toys, and other foreign objects and cause serious personal injury to the operator or to bystanders.**

- **Keep the area to be cleared free of all objects that the rotor blades could pick up and throw.**
- **Keep all children and pets away from the area of operation.**

- Remove the snow as soon as possible after it falls.
- To self-propel, raise the handle and tilt the snowthrower slightly forward, lifting the wheels off the ground. The more you tilt the handle forward, the faster the snowthrower self-propels.
- If the snowthrower does not propel itself forward on slippery surfaces or in heavy snow, push forward on the handle, but allow the snowthrower to work at its own pace.
- Overlap each swath to ensure complete snow removal.
- Discharge the snow downwind whenever possible.
- In snowy and cold conditions, some controls and moving parts may freeze. **Do not use excessive force when trying to operate frozen controls.** If you have difficulty operating any control or part, start the engine and let it run for a few minutes.

# Maintenance

**Note:** Determine the left and right sides of the machine from the normal operating position.

## Recommended Maintenance Schedule(s)

| Maintenance Service Interval | Maintenance Procedure |
|---|---|
| After the first hour | • Check for loose fasteners and tighten them if necessary. |
| Yearly | • Have an Authorized Service Dealer replace the rotor blades and the scraper if necessary.<br>• Inspect the scraper for wear and replace it if necessary.<br>• Have an Authorized Service Dealer inspect the drive belt and replace it if necessary.<br>• Have an Authorized Service Dealer inspect the spark plug and replace it if necessary.<br>• Check for loose fasteners and tighten them if necessary. |
| Yearly or before storage | • Prepare the snowthrower for storage. |

## Inspecting the Rotor Blades

Yearly—Have an Authorized Service Dealer replace the rotor blades and the scraper if necessary.

Before each season, inspect the rotor blades for wear. When a rotor blade edge has worn down to the wear indicator hole, have an Authorized Service Dealer replace both rotor blades and the scraper (Figure 10).

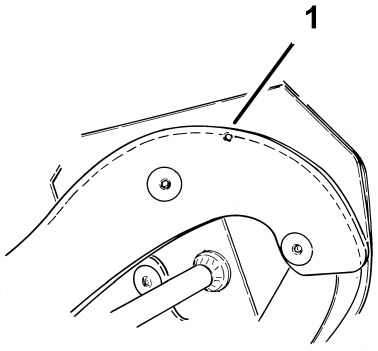


**Figure 10**

1. Wear indicator hole

## Inspecting the Scraper

**Service Interval:** Yearly

Before each season, inspect the scraper for wear. If the thickness from the top of the wear indicator groove to the bottom of the scraper is less than 1/16 inch (1.6 mm) or there is no longer a wear indicator groove, replace the scraper (Figure 11).

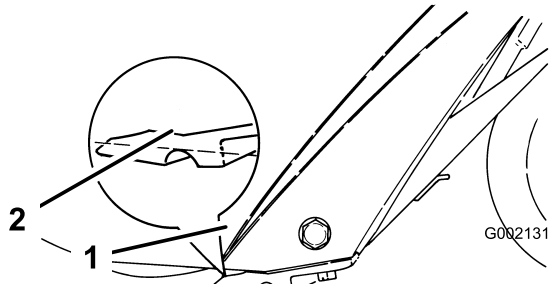


**Figure 11**

1. Scraper
2. Wear indicator groove

# Storage

## Storing the Snowthrower

**Gasoline fumes are highly flammable, explosive, and dangerous if inhaled. If you store the product in an area with an open flame, the gasoline fumes may ignite and cause an explosion.**

**Do not store the snowthrower in a house (living area), basement, or any other area where ignition sources may be present, such as hot water and space heaters, clothes dryers, furnaces, and other like appliances.**

**Important: Store the snowthrower in its operating position and on its wheels. Storing the snowthrower on its front housing may cause hard starting.**

1. Add a fuel stabilizer/conditioner to the fuel in the fuel tank as directed.

   **Note:** If you use **Toro 50:1 2-Cycle Oil (Fuel Stabilizer Added)**, you do not need to add a fuel stabilizer/conditioner.

2. Run the engine for 5 minutes to distribute the conditioned fuel through the fuel system.
3. Stop the engine and allow it to cool.
4. Use a hand pump to pump the fuel from the fuel tank into an approved fuel container, or run the engine until it stops.
5. Start the engine and run it until it stops.
6. Choke or prime the engine, start it a third time, and run the engine until it will not start.
7. Slowly pull the recoil starter until you feel resistance due to compression pressure, then stop.
8. Release the starter tension gradually by allowing the rope to go back slowly to prevent the engine from reversing due to compression pressure.
9. Dispose of unused fuel properly. Recycle it according to local codes, or use it in your automobile.

   **Note:** Do not store stabilized fuel for more than 90 days.

10. Tighten all fasteners. Repair or replace any damaged parts.
11. Clean the snowthrower.
12. Cover the snowthrower and store it in a clean, dry place out of the reach of children. Allow the engine to cool before storing it in any enclosure.

## Folding the Handle

1. Remove the knob from the rear of the discharge chute.
2. Fold the discharge chute down and install the knob tightly onto the bolt at the rear of the discharge chute handle (Figure 12).

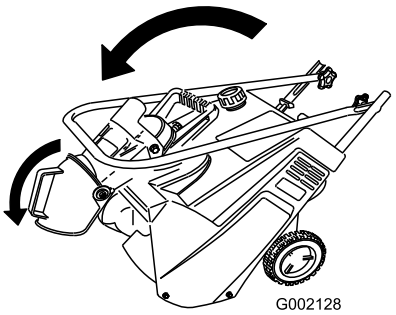


**Figure 12**

3. Loosen the knobs on the handle and fold the handle down over the snowthrower.

   **Note:** You can carry the folded snowthrower by its discharge chute handle.

# Notes:

Single-Stage
Gas Powered
Snow Products

# The Toro Total Coverage Guarantee

A Two-Year Full Warranty (Limited Warranty for Commercial Use)

### Conditions and Products Covered

The Toro Company and its affiliate, Toro Warranty Company, pursuant to and agreement between them, promise to repair any Toro Product used for residential purposes* if defective in materials or workmanship.
This warranty covers the cost of parts and labor, but you must pay transportation costs. This warranty applies to Toro single-stage CCR Powerlite Snowthrowers.

### Limited Warranty for Commercial Use

Gas-powered Toro Snowthrowers used for commercial, institutional, or rental use are warranted for 45 days against defects in materials or workmanship. Components failing due to normal wear are not covered by this warranty.

### Items and Conditions Not Covered

There is no other express warranty. This express warranty does not cover the following:

- Cost of regular maintenance service or parts, such as filters, fuel, lubricants, oil changes, spark plugs, cable/linkage adjustments, or brake and clutch adjustments
- Any product or part which has been altered or misused or required replacement or repair due to accidents or lack of proper maintenance
- Repairs necessary due to electrical supply irregularities or failure to properly prepare the snowthrower prior to any period of non-use over three months
- Pickup and delivery charges
- Operational misuse, neglect, or accidents
- Repairs or attempted repairs by anyone other than a Toro Service outlet
- Repairs or adjustments to correct starting difficulties due to the following:
  - snowthrower auger/paddles striking an object
  - contaminants in the fuel system failure to follow proper maintenance procedures
  - improper fuel or fuel/oil mixture (consult your *Operator's Manual* if in doubt)
  - failure to drain the fuel system prior to any period of non-use over three months

If you are having difficulty starting your unit, please check the *Operator's Manual* to ensure that you are using the correct starting procedures. This can save an unnecessary visit to a Service Dealer.

### Owner Responsibilities

You must maintain your Toro Product by following the maintenance procedures described in the *Operator's Manual*. Such routine maintenance, whether performed by a dealer or by you, is at your expense.

### Instructions for Obtaining Warranty Service

If you think that your Toro Product contains a defect in materials or workmanship, or if a normal, able-bodied adult can no longer start your product's engine in one or two pulls, follow this procedure:

1. Contact any Toro Authorized or Master Service Dealer to arrange service at their dealership. To locate a dealer convenient to you, refer to the Yellow Pages of your telephone directory (look under *Lawn Mowers*) or access our web site at www.Toro.com. You may also call our Toro Customer Care Department toll free at 866-336-5205 (U.S. customers) or 866-854-9033 (Canadian customers).
2. Bring the product and your proof of purchase (sales receipt) to the Service Dealer.
3. If for any reason you are dissatisfied with the Service Dealer's analysis or with the assistance provided, contact us at: Customer Care Department, Consumer Division, Toro Warranty Company, 8111 Lyndale Avenue South, Bloomington, MN 55420-1196.

### General Conditions

All repairs covered by these warranties must be performed by an Authorized or Master Toro Service Dealer using Toro approved replacement parts. Repair by a Toro Service Dealer is your sole remedy under these warranties. **Neither The Toro Company nor Toro Warranty Company is liable for indirect, incidental, or consequential damages in connection with the use of the Toro Products covered by these warranties, including any cost or expense of providing substitute equipment or service during reasonable periods of malfunction or non-use pending completion of repairs under these warranties. Some states do not allow exclusions of incidental or consequential damages, or limitations on how long an implied warranty lasts, so the above exclusions and limitations may not apply to you.** This warranty gives you specific legal rights, and you may also have other rights which vary from state to state.

### Countries Other than the United States or Canada

Customers who have purchased Toro products exported from the United States or Canada should contact their Toro Distributor (Dealer) to obtain guarantee policies for your country, province, or state. If for any reason you are dissatisfied with your Distributor's service or have difficulty obtaining guarantee information, contact the Toro importer. If all other remedies fail, you may contact us at Toro Warranty Company.

*Residential purposes means use of the product on the same lot as your home. Use at more than one location is considered commercial use, and the commercial use warranty would apply.

Part Number 374-0011 Rev. C