FORM NO. 3316–128

TORO®

MODEL NO. 20902B–3900001 & UP

PARTS CATALOG

48cm REAR BAGGING MOWER

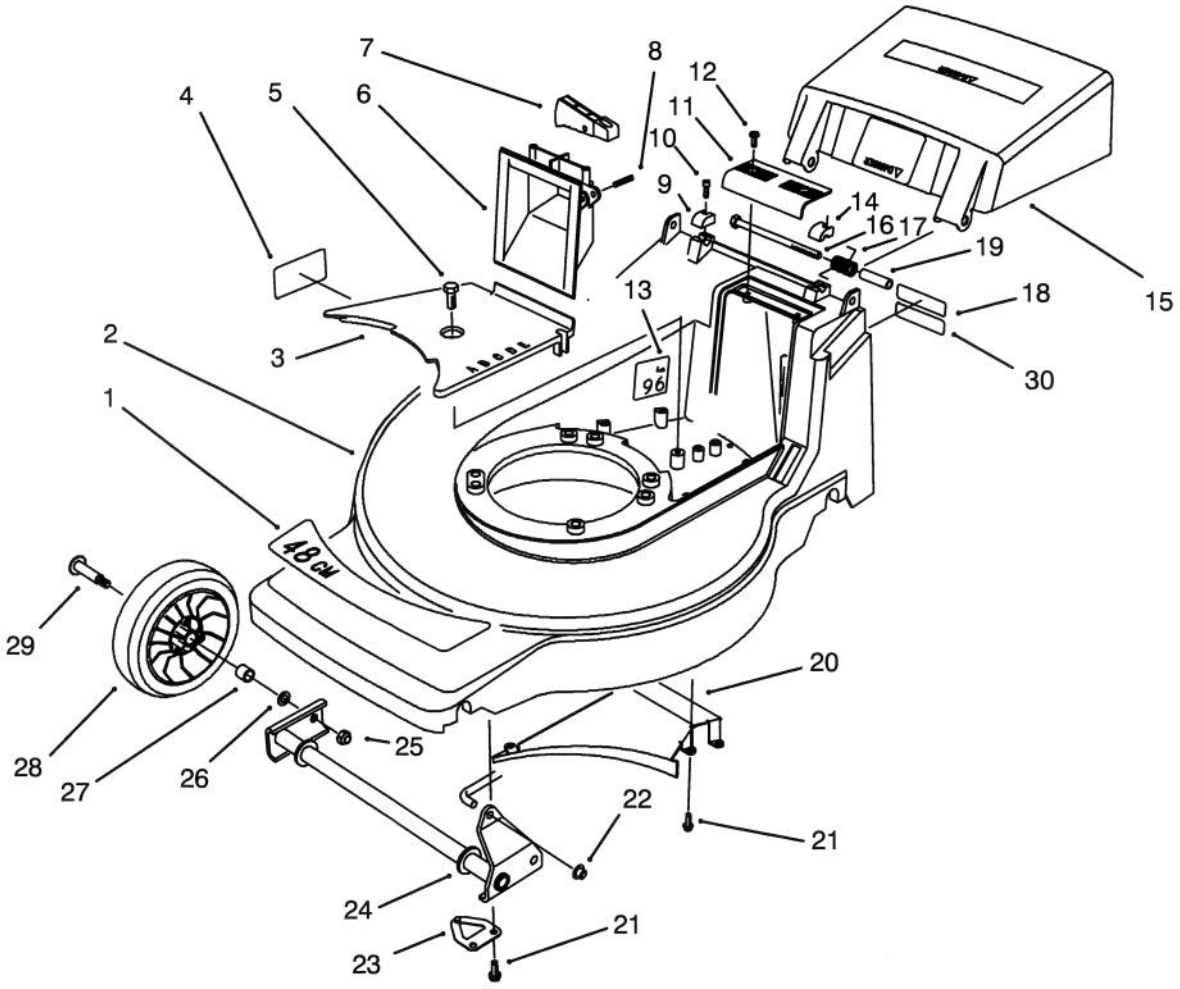

C–1507

HOUSING ASSEMBLY

Ref. No.	Part No.	Description	No. Used
1	71–9860	Decal – 48cm	1
2	16–1669	Housing – 48cm (Incl. Ref. #4)	1
3	71–7920	Cover – Belt	1
4	62–3860	Decal – Danger	1
5	32144–70	Screw – Hex. Flange Hd.	1
6	71–7870	Grip – Lower	1
7	71–7930	Trigger – H.O.C.	1
8	3284–5	Pin – Roll	1
9	71–7910	Cap – Hinge Bolt R.H.	1
10	65–5210	Screw – Thread Forming	2
11	71–7860	Grip – Upper	1
12	32144–97	Screw – Thread Forming	2
13		Decal – Noise Rating	1
14	71–7900	Cap – Hinge Bolt L.H.	1
15	71–9801	Door Discharge	1

Ref. No.	Part No.	Description	No. Used
16	322–29	Screw – Cap Hex. Hd.	2
17	71–9840	Spring – Door	2
18	66–0680	Decal – French Regulation	1
19	71–8580	Spacer – Door	2
20	71–7990	Ramp – Discharge	1
21	32144–4	Screw – Thread Forming	8
22	32112–11	Nut – Push	1
23	71–8830	Retainer – Shaft	2
24	71–7820	Pivot – Front	1
25	3296–5	Nut – Lock	2
26	40–1940	Washer – Wheel	2
27	27–6250	Bushing – Wheel	4
28	46–1113	Wheel & Tire Assembly (Incl. Ref. #27)	2
29	27–6230	Bolt – Wheel	2
30		Decal – Power Rating	1

© The TORO Company –1993
All Rights Reserved

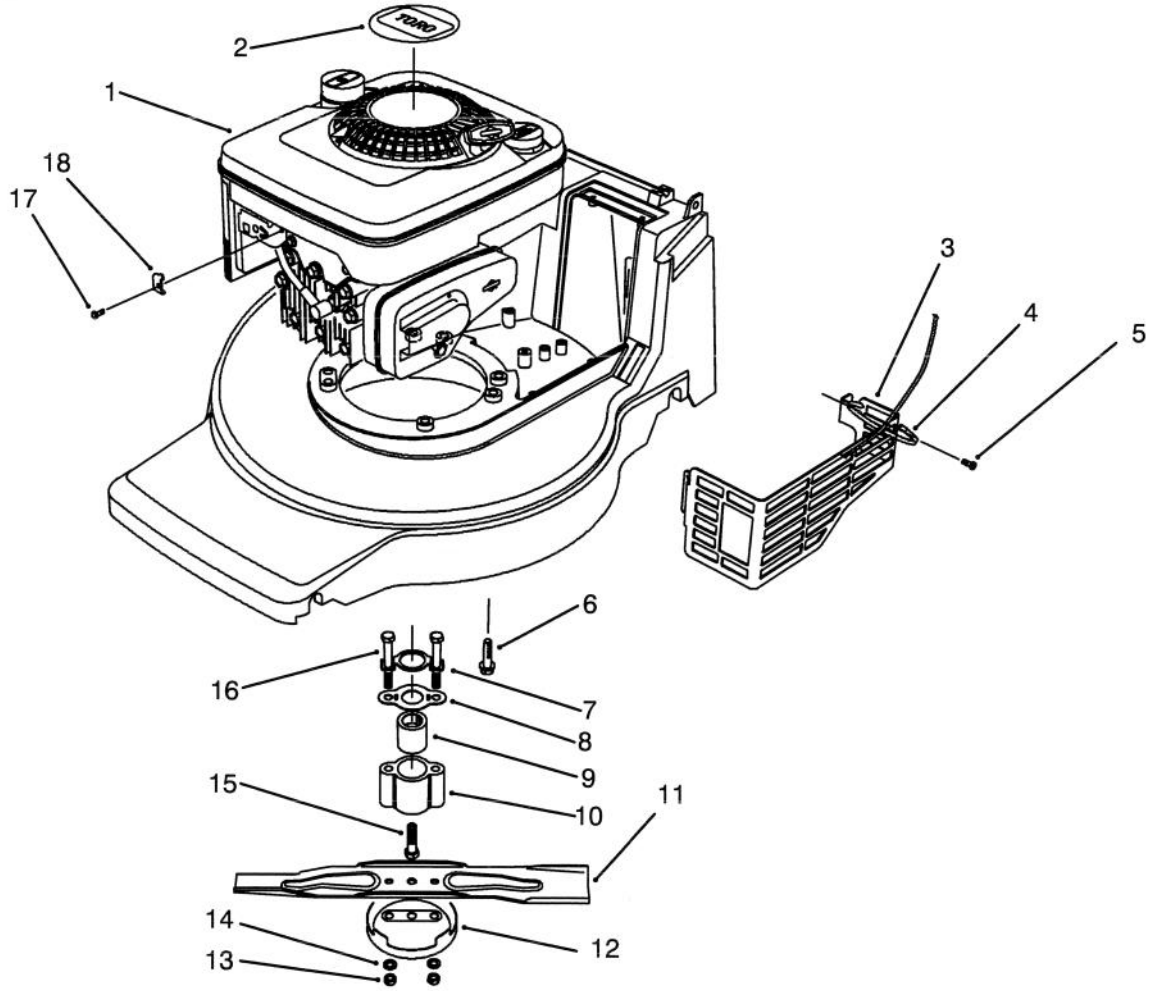

C–0636

ENGINE ASSEMBLY
(Serial No. 3000001–3001001)

Ref. No.	Part No.	Description	No. Used
1		Engine – B&S Quantum	1
2	71–8460	Decal – Engine	1
3	82–8550	Shield – Muffler	1
4	3290–378	Tie – Cable	1
5	32144–73	Screw – Muffler	3
6	32144–102	Bolt – Engine	3
7	71–9220	Retainer – Bracket	1
8	71–8840	Spring – Friction	2
9	71–8780	Hub – Crankshaft	1

Ref. No.	Part No.	Description	No. Used
10	71–8790	Retainer – Blade	1
11	71–8210	Blade – 48cm	1
12	80–2770	Cup – Anti–Scalp	1
13	3296–6	Nut – Lock	2
14	40–1940	Washer	2
15	71–8950	Screw – Crankshaft	1
16	71–8940	Screw – Blade	2
17	86–7990	Screw – Clamp	1
18	2210–249	Clamp – Cable	1

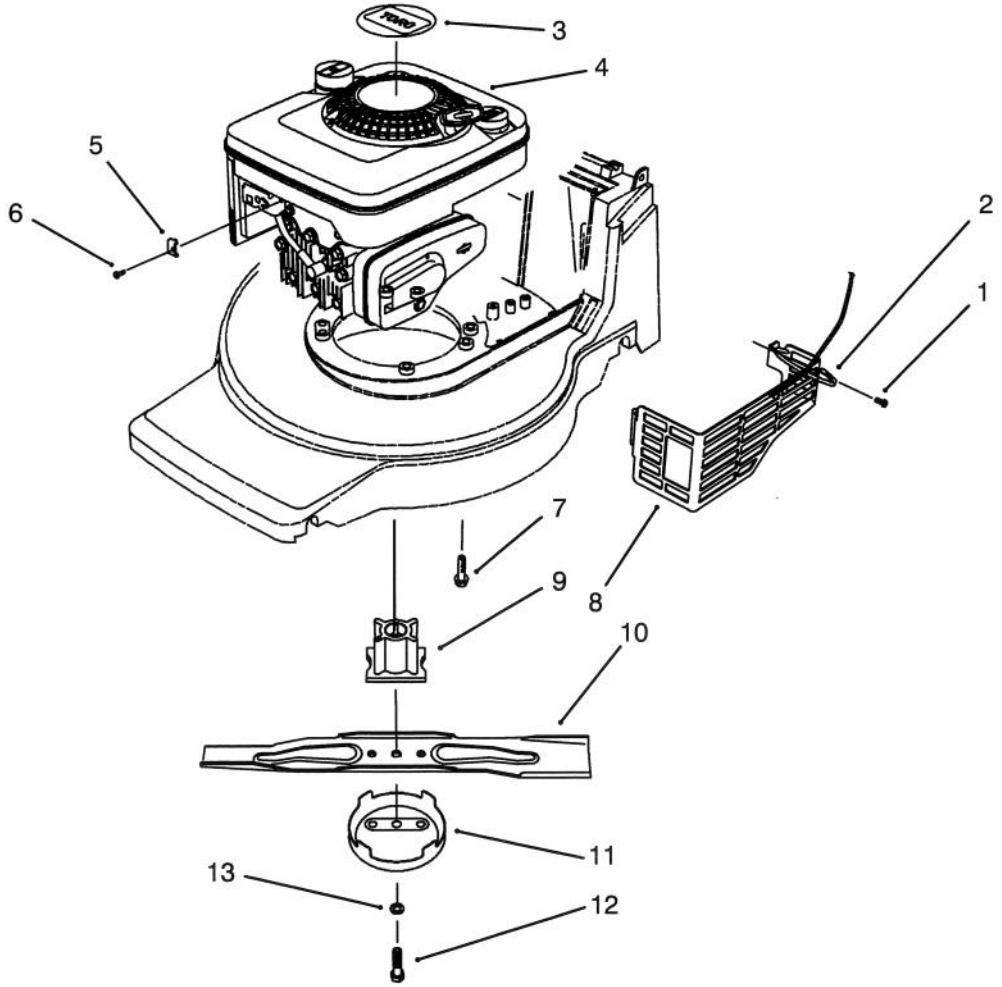

C–1508

ENGINE ASSEMBLY
(Serial No. 3001002 & UP)

Ref. No.	Part No.	Description	No. Used
1	32144–73	Screw – Thr'd Form.	3
2	3290–378	Tie – Cable	1
3	71–8460	Decal – Engine	1
4		Engine – B & S Quantum	1
5	2210–249	Clamp – Casing	1
6	86–7990	Screw – Clamp	1
7	32144–102	Screw – Engine Mount	3

Ref. No.	Part No.	Description	No. Used
8	82–8550	Shield – Muffler	1
9	71–7940	Retainer – Blade	1
10	71–8210	Blade – 48 CM	1
11	80–2770	Cup – Anti–Scalp	1
12	26–0672	Bolt – Blade	1
13	3253–22	Washer – Lock	1

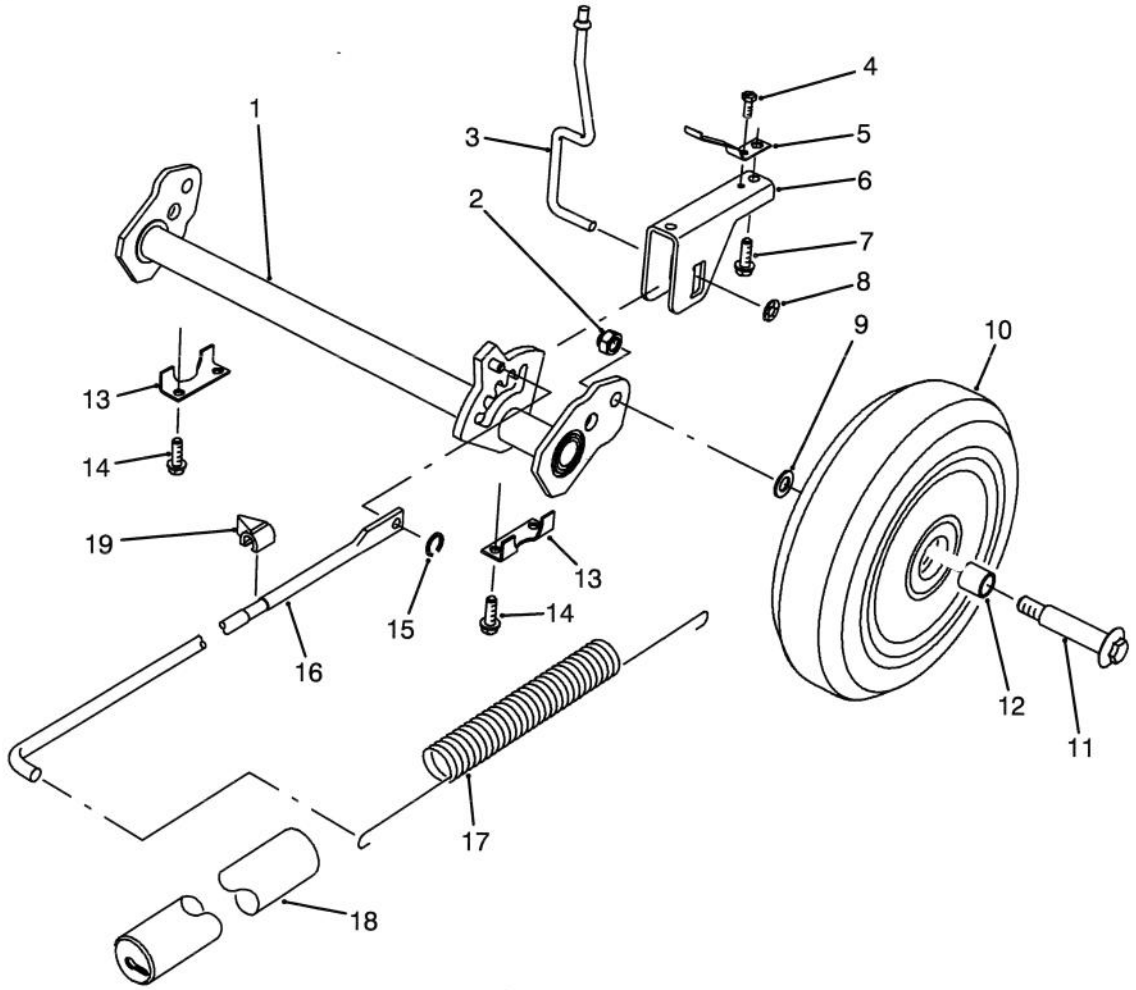

C–0363

H. P. REAR AXLE ASSEMBLY

Ref. No.	Part No.	Description	No. Used
1	71–7800	Pivot – Rear H.P.	1
2	3296–5	Nut – Lock	2
3	71–7840	Rod – Trigger	1
4	32144–31	Screw – Thread Forming	1
5	71–8060	Spring – Trigger Return	2
6	71–8080	Saddle – H.O.C.	1
7	63–8590	Screw – Thread Forming	2
8	32112–13	Nut – Push	1
9	40–1940	Washer – Wheel	2
10	11–9509	Wheel & Tire Assembly (Incl. Ref. #12)	2

Ref. No.	Part No.	Description	No. Used
11	27–6230	Bolt – Wheel	2
12	27–6250	Bushing – Wheel	4
13	71–7770	Plate – Rear Securing	2
14	32144–4	Screw – Thread Forming	4
15	32151–93	Ring – Grip	1
16	71–7970	Rod – Link	1
17	71–7740	Spring – Counterbalance	1
18	71–8450	Cover – Spring	1
19	71–7980	Indicator – H.O.C.	1

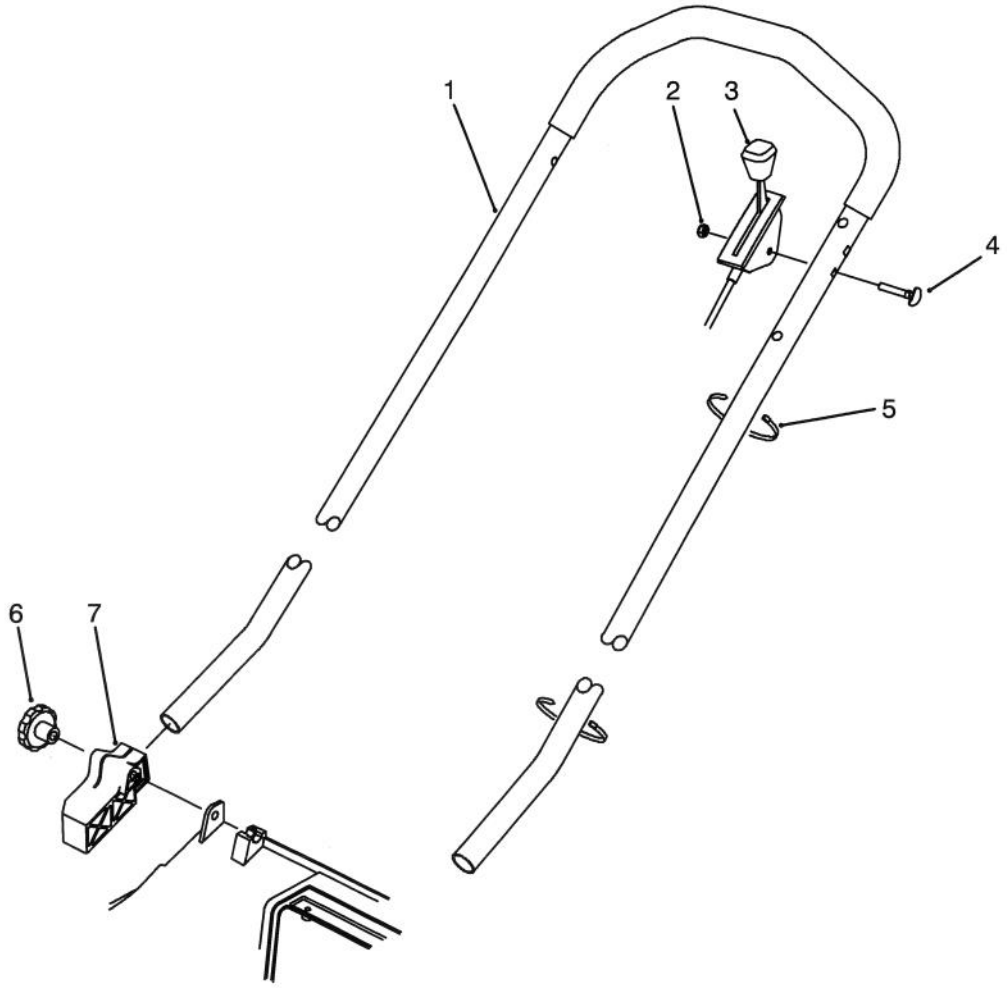

C–0366

H. P. HANDLE ASSEMBLY

Ref. No.	Part No.	Description	No. Used
1	71–9020	Handle	1
2	3296–56	Nut – Lock	1
3	71–8382	Control – Throttle Bend Type #1 Sheath Lg. 57.50 Wire Lg. 2 1/2	1
4	46–6430	Screw – Cap Hex. Hd.	1
5	3290–378	Tie – Cable	2
6	19–4050	Knob – Handle	2
7	71–8100	Mount – Handle R.H.	1
*	71–8090	Mount – Handle L.H.	1

*Not Illustrated

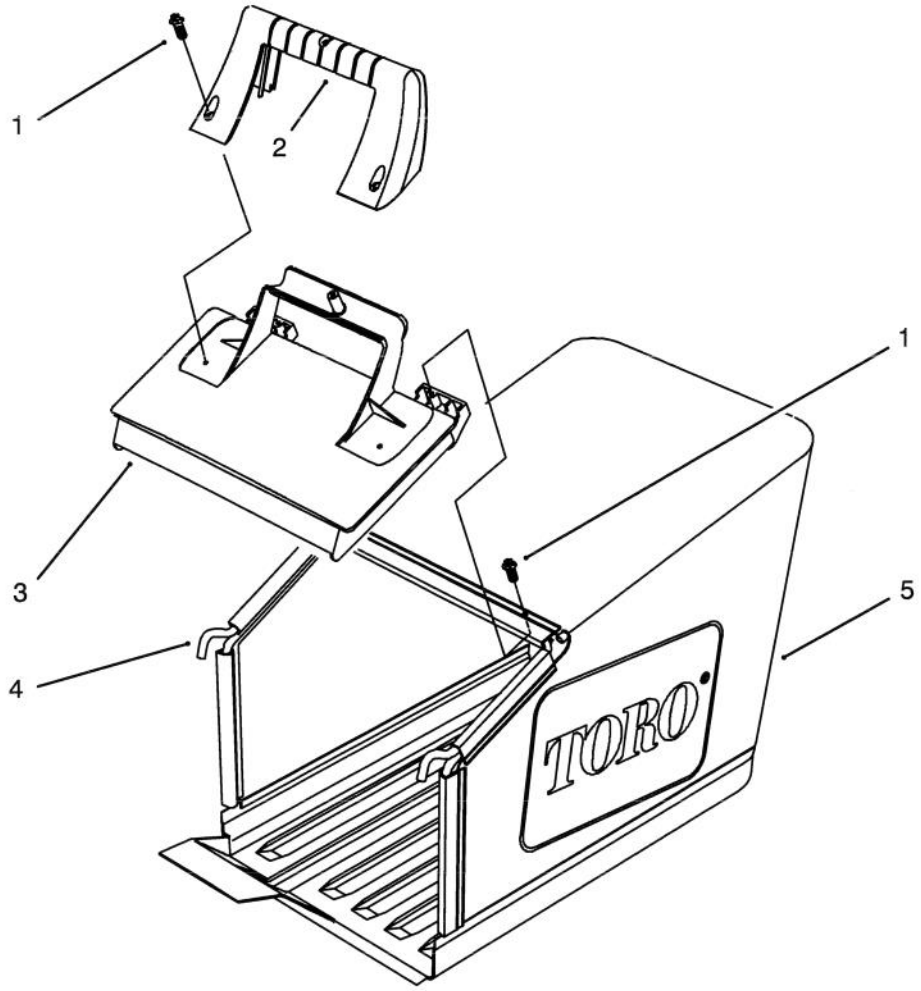

C–1509

GRASS BAG ASSEMBLY

Ref. No.	Part No.	Description	No. Used
1	32144–111	Screw – Hex Washer Hd. Thread Form.	5
2	71–9480	Handle – Door	1

Ref. No.	Part No.	Description	No. Used
3	71–9470	Door – Bag	1
4	71–9900	Frame – Bag	1
5	71–9460	Bag – Grass	1

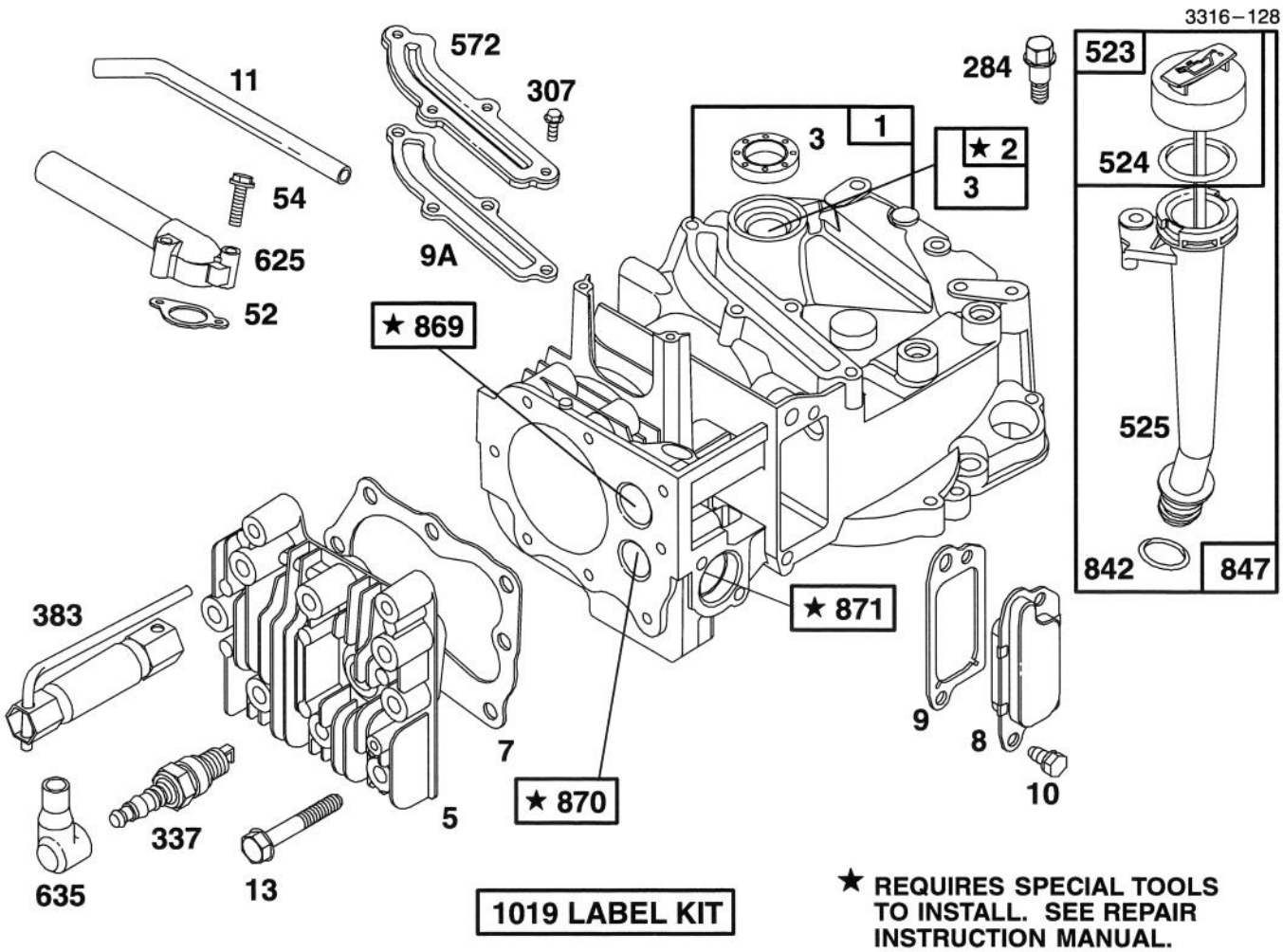

ENGINE BRIGGS & STRATTON MODEL 122702–0182–01

Ref. No.	Part No.	Description	No. Used
1	493260	Cylinder Assembly	1
2	293708	Bushing–Cylinder	1
		Note: Requires Special Tools for Installation.	1
★3	393862	Seal–Oil	1
5	213861	Head–Cylinder	1
★7	272200	Gasket–Cylinder Hd.	1
8	399717	Breather–Vlv. Chamber	1
★9	271904	Gasket–Valve Cover	1
★9A	272238	Gasket–Baffle Plate	1
10	94222	Screw–Breather Mtg.	1
11	231685	Tube–Breather	1
13	94547	Screw–Cylinder Hd.	1
★52	272199	Gasket–Intake Elbow	1
54	94526	Screw–Intake Elbow Mtg.	1
284	94511	Screw–Hex. Head	1
307	94515	Screw–Hex. Head	1
337	802592	Plug–Spark	1
383	89838	Wrench–Spark Plug	1

Ref. No.	Part No.	Description	No. Used
523	493950	Cap with Dipstick–Oil Filler	1
524	280393	Seal–Filler Tube	1
525	493952	Tube–Oil Filler	1
572	224328	Baffle–Cylinder	1
625	492717	Tube–Fuel Intake	1
635	66538	Elbow–Spark Plug	1
842	280966	Seal–O-Ring	1
847	493459	Dipstick and Tube Assy.–Oil Filler	1
869	213512	Seat–Intake Valve (Std.)	1
870	213513	Seat–Exhaust Valve (Std.)	1
871	262001	Guide–Exhaust Valve	1
		Note: 63709 Guide–Intake Valve See Repair Instruction Manual.	1
1019	494256	Label Kit	1

★ Included in Gasket Set–Part No. 493263.

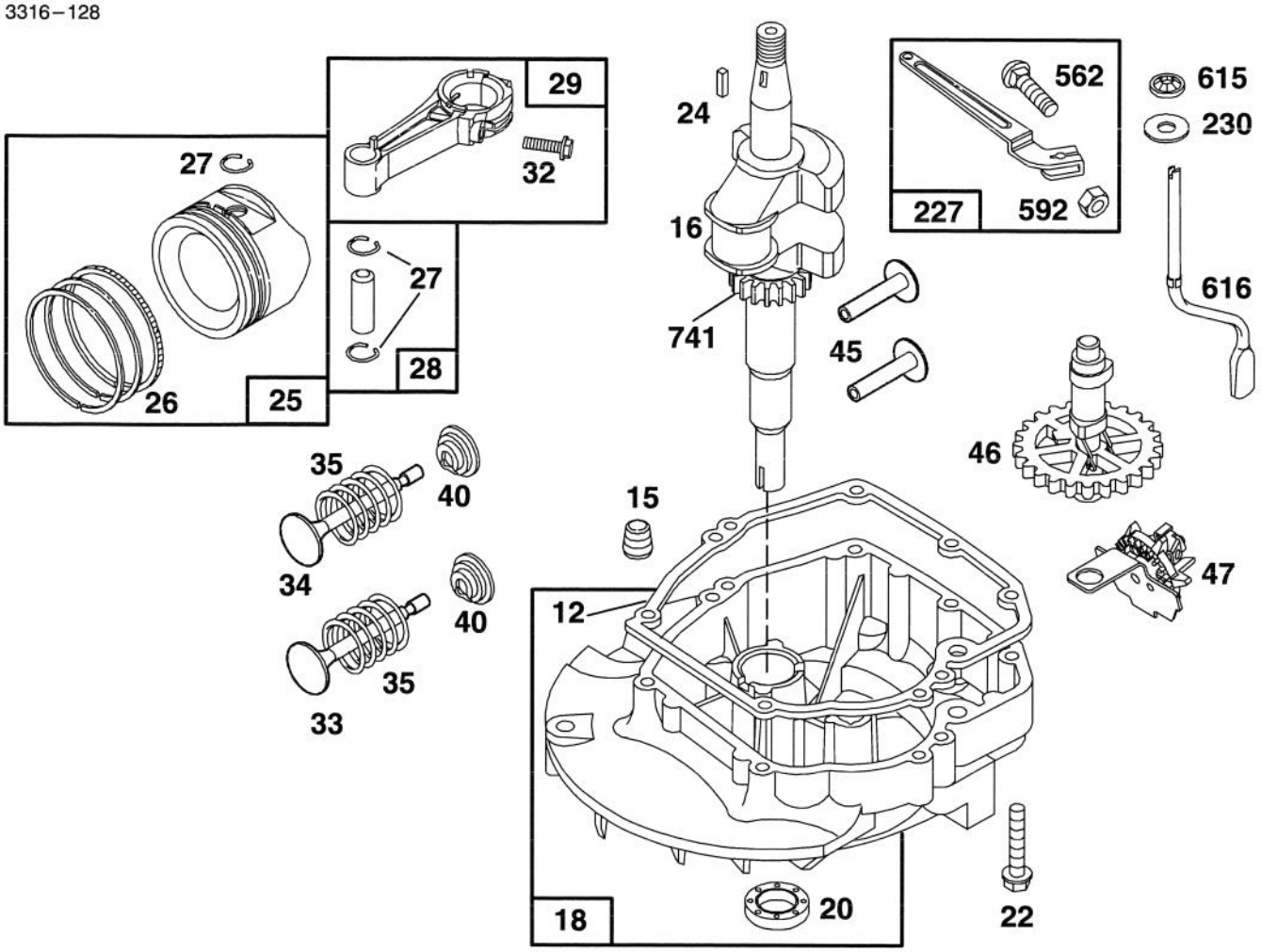

ENGINE BRIGGS & STRATTON MODEL 122702–0182–01

Ref. No.	Part No.	Description	No. Used
★12	272198	Gasket–Crankcase	1
15	93418	Plug–Oil Drain	1
16	494547	Crankshaft	1
		Note: Order 94388 For Timing Gear Key.	1
18	493279	Sump–Engine	1
★20	399781	Seal–Oil	1
22	94220	Screw–Sump Mtg. Sem	1
		Note: 94612 Screw–Sump Mtg. One Used in Hole Nearest Breather.	1
24	222698	Key–Flywheel	1
25	493262	Piston Assy. (Standard)	1
	493385	Piston Assy. (.010" O.S.)	1
	493386	Piston Assy. (.020" O.S.)	1
	493387	Piston Assy. (.030" O.S.)	1
		PISTON RING SETS:	
26	493261	Ring Set–Piston (Std.)	1
	493388	Ring Set–Piston (.010" O.S.)	1
	493389	Ring Set–Piston (.020" O.S.)	1
	493390	Ring Set–Piston (.030" O.S.)	1

Ref. No.	Part No.	Description	No. Used
27	26026	Lock–Piston Pin	1
28	298909	Pin Assembly–Piston (Std.)	1
29	490566	Rod Assembly– Connecting	1
		Note: For Connecting Rod with .020" Undersize Crankpin Bearing–Order No. 490743.	1
32	94405	Screw–Connecting Rod	1
33	262651	Valve–Exhaust	1
34	262652	Valve–Intake	1
35	262224	Spring–Valve	1
40	93312	Retainer–Valve Spring	1
45	262204	Tappet–Valve	1
46	492828	Gear–Cam	1
47	493737	Oil Slinger Gear and Bracket	1
227	492349	Lever Assembly–Gov.	1
230	67072	Washer–Gov. Crank	1
562	92613	Bolt–Governor Lever	1
592	231082	Nut–Hex	1
615	94474	Pushnut (Governor Crank)	1
616	262578	Crank–Governor	1
741	262598	Gear–Timing	1

★ Included in Gasket Set–Part No. 493263.

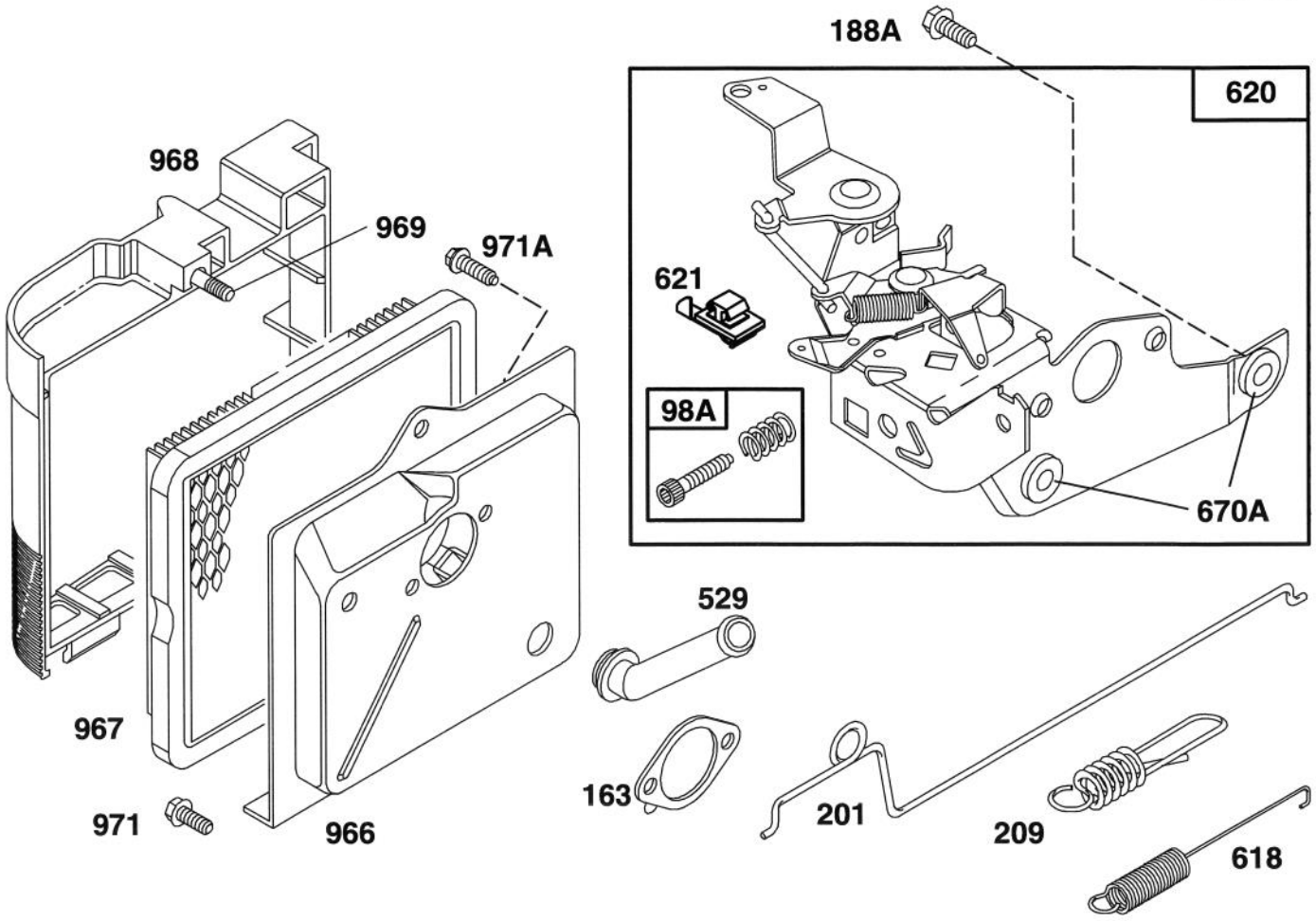

ENGINE BRIGGS & STRATTON MODEL 122702–0182–01

Ref. No.	Part No.	Description	No. Used
98A	493280	Screw Assy.–Speed Adj.	1
★163	272296	Gasket–Air Cleaner	1
188A	94644	Screw–Hex. Head	1
201	262579	Link–Governor	1
209	262661	Spring–Governor	1
529	280943	Grommet–Breather	1
618	262749	Spring–Choke Return	1
620	493894	Bracket Assembly–Carburetor Control	1
621	396847	Switch–Stop	1

Ref. No.	Part No.	Description	No. Used
670A	493823	Spacer–Carburetor Brkt. (Includes 2)	1
966	492363	Base–Air Cleaner	1
967	491588	Filter–Air	1
968	280937	Cover–Air Cleaner	1
969	94120	Screw–Cover Mtg.	1
971	94269	Screw–Air Cleaner	1
971A	94121	Screw–Air Cleaner (Base to Carburetor)	1

★ Included in Gasket Set–Part No. 493263.

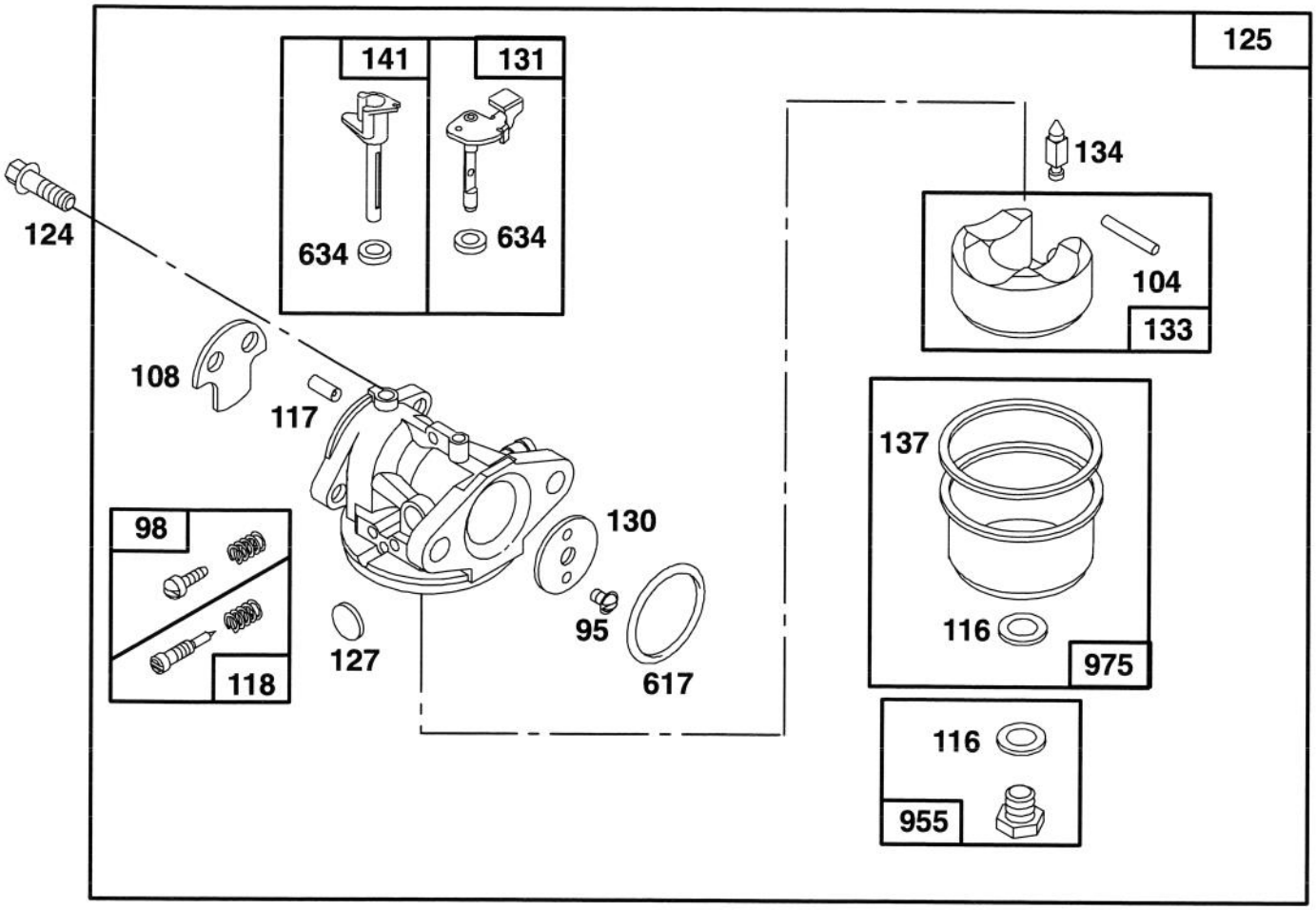

ENGINE BRIGGS & STRATTON MODEL 122702–0182–01

Ref. No.	Part No.	Description	No. Used
95	94098	Screw–Throttle Valve Mounting	1
98	398185	Screw–Idle Adjustment	1
•104	231371	Pin–Float Hinge	1
108	223471	Valve–Choke	1
••116		Gasket–Sealing (Sold in Kit Only).	1
•117		Jet (Sold in Kit Only).	1
118	493765	Valve and Spring–Needle	1
124	94525	Screw–Carburetor Mtg.	1
125	494216	Carburetor Assembly	1
•127		Plug–Welch (Sold in Kit Only).	1

Ref. No.	Part No.	Description	No. Used
130	223470	Valve–Throttle	1
131	493267	Shaft and Lever–Throttle	1
133	398187	Float Assy.–Carburetor	1
•134	398188	Valve–Inlet (Includes Seat)	1
••137		Gasket–Bowl (Sold in Kit Only).	1
141	494218	Shaft–Choke	1
••617	270344	Seal–Fuel Intake Tube	1
••634		Washer–Shaft (Sold in Kit Only).	1
955	493763	Screw–Fuel Bowl	1
975	493640	Bowl–Carburetor	1

• Included in Carburetor Overhaul Kit–Part No. 493762.
◆ Included in Carburetor Gasket Set–Part No. 490937.

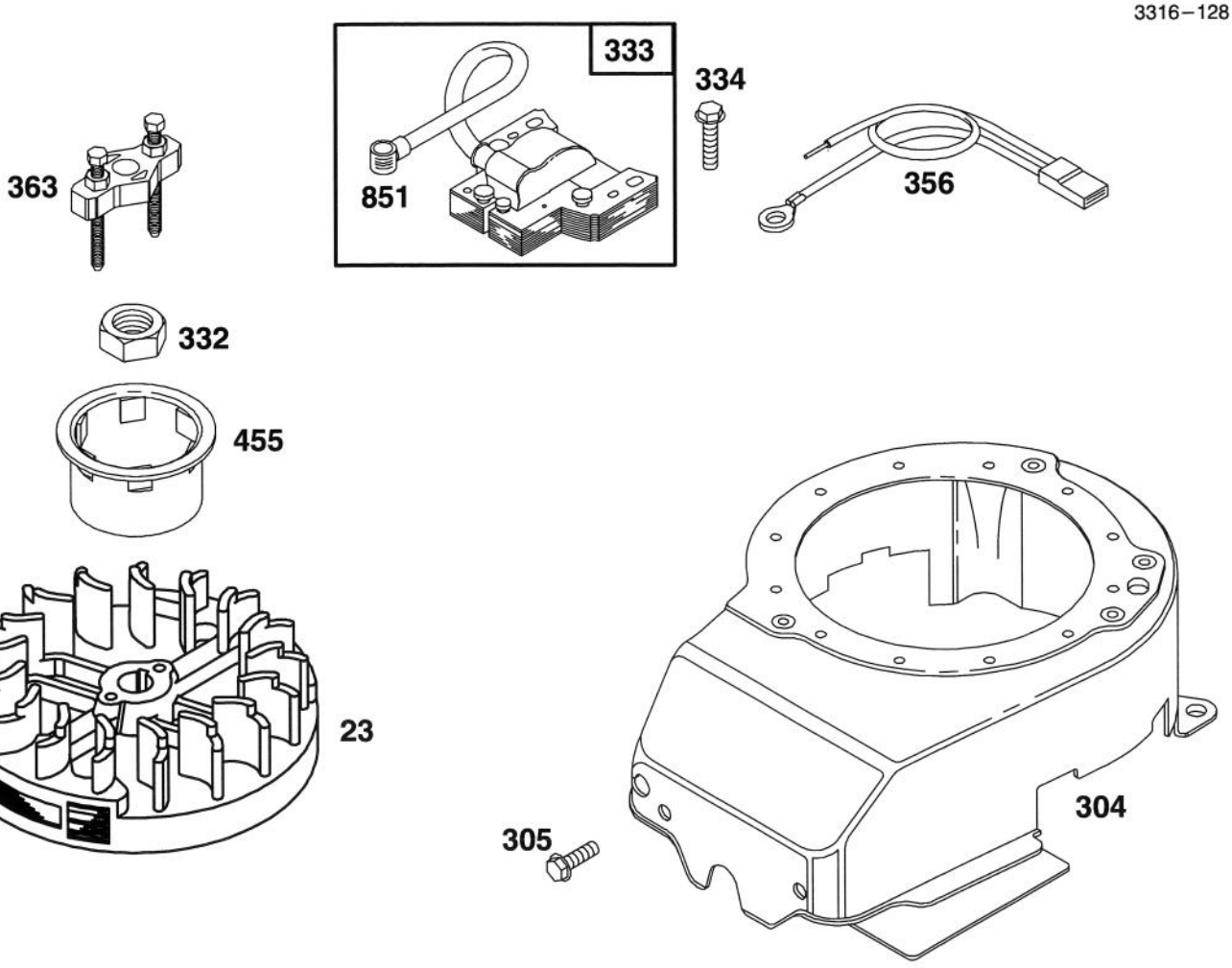

ENGINE BRIGGS & STRATTON MODEL 122702–0182–01

Ref. No.	Part No.	Description	No. Used
23	492177	Flywheel Assembly	1
304	493294	Housing–Blower	1
305	94513	Screw–Hex Head Sem	1
332	92284	Nut–Flywheel	1
333	802574	Armature–Magneto	1

Ref. No.	Part No.	Description	No. Used
334	93381	Screw–Armature Mounting	1
356	398808	Wire–Ground	1
363	19069	Puller–Flywheel	1
455	224250	Cup–Starter	1
851	221798	Terminal–Ignition Cable	1

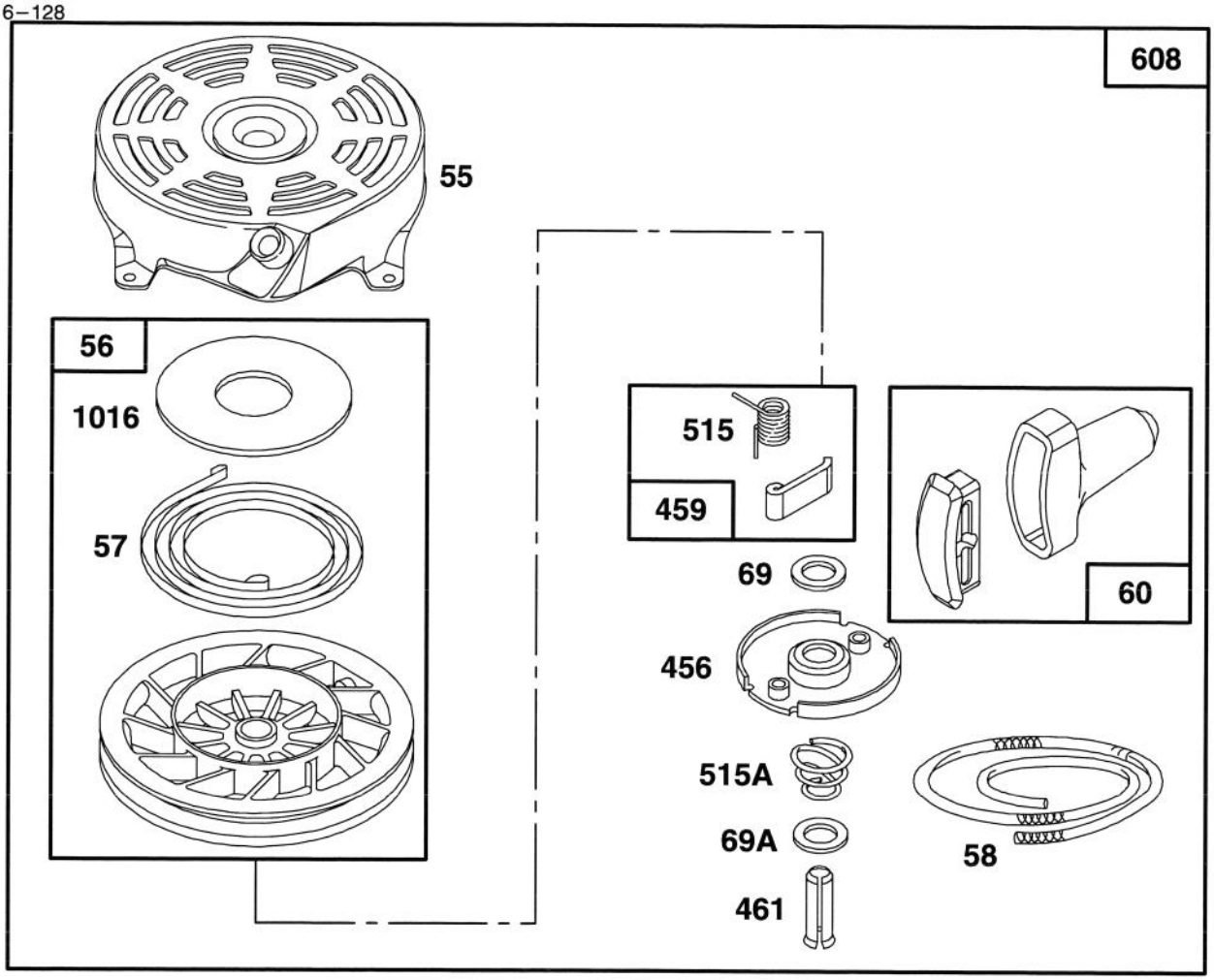

ENGINE BRIGGS & STRATTON MODEL 122702–0182–01

Ref. No.	Part No.	Description	No. Used
55	492831	Housing–Rewind Starter	1
56	492832	Pulley–Rewind Starter	1
57	262594	Spring–Rewind Starter	1
58	280399	Rope–Rewind Starter (Cut to 88–5/8")	1
60	393152	Handle–Rewind Starter	1
69	280973	Washer–Rewind Starter	1
69A	224322	Washer–Rewind Starter	1
456	224321	Retainer–Rewind Starter	1

Ref. No.	Part No.	Description	No. Used
459	492833	Pawl–Starter	1
461	262626	Pin–Starter	1
515	262556	Spring–Pawl	1
515A	262625	Spring–Torsion	1
608	493295	Starter Assy.–Rewind Includes: 94128 Screw–Hex. Hd. 92987 Nut–Hex.	1
1016	224278	Cover–Rewind Starter	1

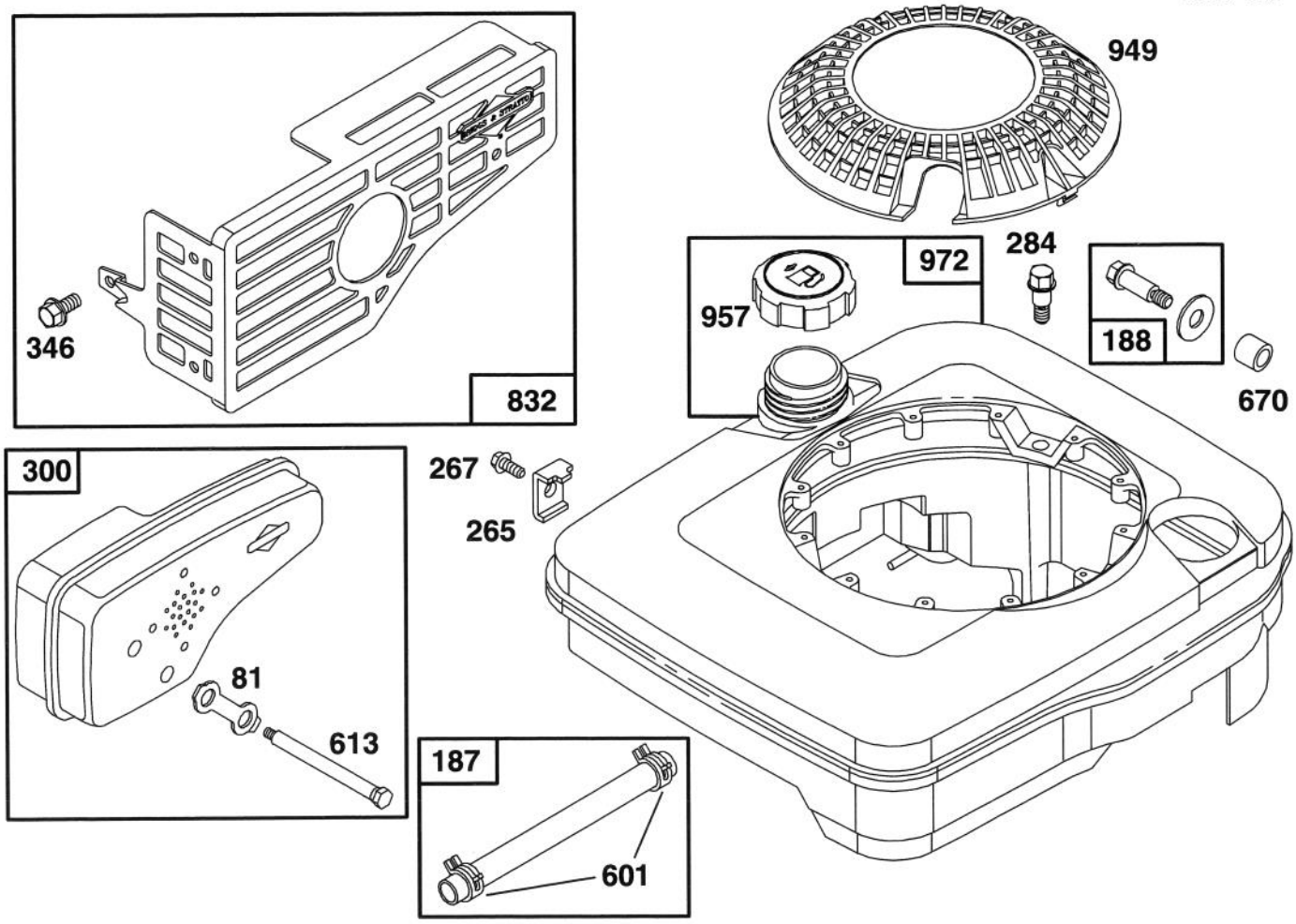

ENGINE BRIGGS & STRATTON MODEL 122702–0182–01

Ref. No.	Part No.	Description	No. Used
81	223664	Lock–Muffler Screw	1
187	492790	Hose–Fuel	1
188	398540	Screw–Tank Mounting (Includes Washer)	1
265	221535	Clamp–Casing	1
267	94204	Screw–Clamp Mtg.	1
284	94511	Screw–Hex Head	1
300	490547	Muffler–Exhaust	1

Ref. No.	Part No.	Description	No. Used
346	94602	Screw–Hex. Head	1
601	93807	Clamp–Hose	1
613	94231	Screw–Muffler Mtg.	1
670	280512	Spacer–Fuel Tank	1
832	494224	Guard–Muffler	1
949	281136	Guard–Finger	1
957	397974	Cap Assembly–Fuel	1
972	494528	Tank Assembly–Fuel	1

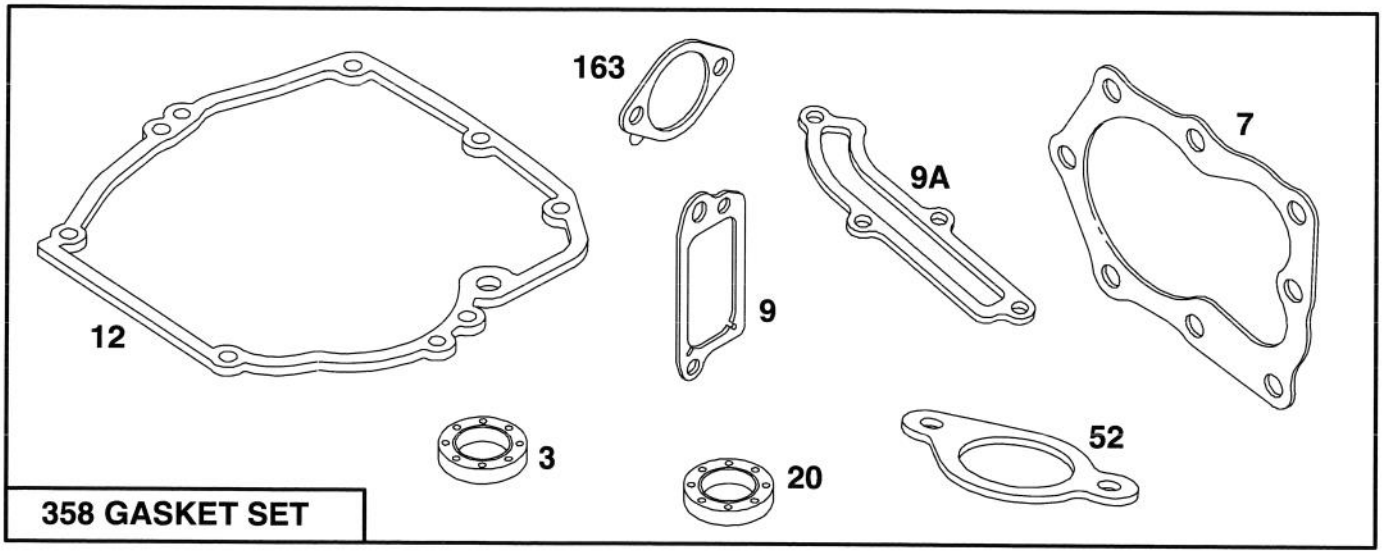

358 GASKET SET

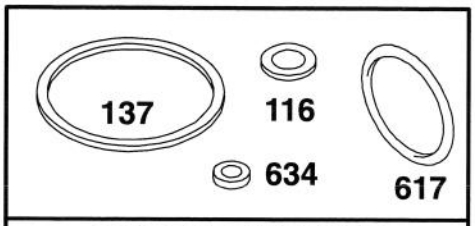

977 CARBURETOR GASKET SET

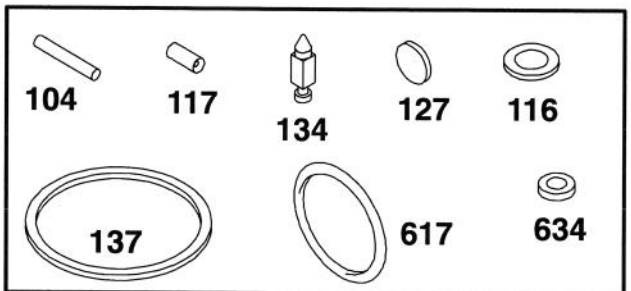

121 CARBURETOR OVERHAUL KIT

ENGINE BRIGGS & STRATTON MODEL 122702–0182–01

Ref. No.	Part No.	Description	No. Used
★3	393862	Seal–Oil	1
★7	272200	Gasket–Cylinder Hd.	1
★9	271904	Gasket–Valve Cover	1
★9A	272238	Gasket–Baffle Plate	1
★12	272198	Gasket–Crankcase	1
★20	399781	Seal–Oil	1
★52	272199	Gasket–Intake Elbow	1
•104	231371	Pin–Float Hinge	1
••116		Gasket–Sealing (Sold in Kit Only).	1
•117		Jet (Sold in Kit Only).	1

Ref. No.	Part No.	Description	No. Used
121	493762	Carburetor Overhaul Kit	1
•127		Plug–Welch (Sold in Kit Only).	1
•134	398188	Valve–Inlet (Includes Seat)	1
••137		Gasket–Bowl (Sold in Kit Only).	1
★163	272296	Gasket–Air Cleaner	1
358	493263	Gasket Set	1
••617	270344	Seal–Fuel Intake Tube	1
••634		Washer–Shaft (Sold in Kit Only).	1
977	490937	Gasket Set–Carburetor	1

• Included in Carburetor Overhaul Kit–Part No. 493762.
◆ Included in Carburetor Gasket Set–Part No. 490937.
★ Included in Gasket Set–Part No. 493263.

TORO PART NUMBER INDEX

Part No.	Description	Pg. No.	Ref. No.	Qty.
	Engine – B & S Quantum	2	1	1
	Engine – B & S Quantum	3	4	1
	Decal – Noise Rating	1	13	1
	Decal – Power Rating	1	30	1
11–0581	Bolt – Engine	2	6	3
11–9509	Wheel & Tire Assembly	4	10	2
16–1669	Housing – 48cm	1	2	1
19–4050	Knob – Handle	5	6	2
26–0672	Bolt – Blade	3	12	1
27–6230	Bolt – Wheel	4	11	2
27–6230	Bolt – Wheel	1	29	2
27–6250	Bushing – Wheel	4	12	4
27–6250	Bushing – Wheel	1	27	
40–1940	Washer	2	14	2
40–1940	Washer – Wheel	4	9	2
40–1940	Washer – Wheel	1	26	2
46–1113	Wheel & Tire Assembly	1	28	2
46–6430	Screw – Cap Hex. Hd.	5	4	1
62–3860	Decal – Danger	1	4	1
63–8590	Screw – Thread Forming	4	7	2
65–5210	Screw – Thread Forming	1	10	2
66–0680	Decal – French Regulation	1	18	1
71–7740	Spring – Counterbalance	4	17	1
71–7770	Plate – Rear Securing	4	13	2
71–7800	Pivot – Rear H.P.	4	1	1
71–7820	Pivot – Front	1	24	1
71–7840	Rod – Trigger	4	3	1
71–7860	Grip – Upper	1	11	1
71–7870	Grip – Lower	1	6	1
71–7900	Cap – Hinge Bolt L.H.	1	14	1
71–7910	Cap – Hinge Bolt R.H.	1	9	1
71–7920	Cover – Belt	1	3	1
71–7930	Trigger – H.O.C.	1	7	1
71–7940	Retainer – Blade	3	9	1
71–7970	Rod – Link	4	16	1
71–7980	Indicator – H.O.C.	4	19	1
71–7990	Ramp – Discharge	1	20	1
71–8060	Spring – Trigger Return	4	5	2
71–8080	Saddle – H.O.C.	4	6	1
71–8090	Mount – Handle L.H.	5	*	1
71–8100	Mount – Handle R.H.	5	7	1
71–8210	Blade – 48 CM	3	10	1
71–8210	Blade – 48cm	2	11	1
71–8382	Control – Throttle	5	3	1
71–8450	Cover – Spring	4	18	1
71–8460	Decal – Engine	2	2	1
71–8460	Decal – Engine	3	3	1
71–8580	Spacer – Door	1	19	2
71–8780	Hub – Crankshaft	2	9	1
71–8790	Retainer – Blade	2	10	1
71–8830	Retainer – Shaft	1	23	2
71–8840	Spring – Friction	2	8	2
71–8940	Screw – Blade	2	16	2
71–8950	Screw – Crankshaft	2	15	1
71–9020	Handle	5	1	1
71–9220	Retainer – Bracket	2	7	1
71–9460	Bag – Grass	6	5	1
71–9470	Door – Bag	6	3	1
71–9480	Handle – Door	6	2	1
71–9801	Door Discharge	1	15	1
71–9840	Spring – Door	1	17	2
71–9860	Decal – 48cm	1	1	1
71–9900	Frame – Bag	6	4	1
80–2770	Cup – Anti–Scalp	2	12	1
80–2770	Cup – Anti–Scalp	3	11	1
82–8550	Shield – Muffler	2	3	1
82–8550	Shield – Muffler	3	8	1
86–7990	Screw – Clamp	3	6	1
86–7990	Screw – Clamp	2	17	1
2210–249	Clamp – Cable	2	18	1
2210–249	Clamp – Casing	3	5	1
322–29	Screw – Cap Hex. Hd.	1	16	2
3253–22	Washer – Lock	3	13	1
3284–5	Pin – Roll	1	8	1
3290–378	Tie – Cable	3	2	1
3290–378	Tie – Cable	2	4	1
3290–378	Tie – Cable	5	5	2
3296–5	Nut – Lock	4	2	2
3296–5	Nut – Lock	1	25	2
3296–6	Nut – Lock	2	13	2
3296–56	Nut – Lock	5	2	1
32112–11	Nut – Push	1	22	1
32112–13	Nut – Push	4	8	1
32144–4	Screw – Thread Forming	4	14	4
32144–4	Screw – Thread Forming	1	21	8
32144–31	Screw – Thread Forming	4	4	1
32144–70	Screw – Hex. Flange Hd.	1	5	1
32144–73	Screw – Muffler	2	5	3
32144–73	Screw – Thr'd Form.	3	1	3
32144–97	Screw – Thread Forming	1	12	2
32144–102	Screw – Engine Mount	2	6	3
32144–102	Screw – Engine Mount	3	7	3
32144–111	Screw – Hex Washer Hd.	6	1	5
32151–93	Ring – Grip	4	15	1

*Not Illustrated

PRODUCT CHANGES

In an effort to make improvements available to TORO owners as quickly as possible, minor changes are incorporated into Toro's products from time to time that do not become immediately shown in the Parts Catalog. If such a change has been made in your unit, which is not reflected in your manual, see your TORO Distributor or his Authorized TORO Service Dealer for information and part numbers.

COUNTRIES OTHER THAN THE UNITED STATES OR CANADA

Customers who have purchased TORO products exported from the United States or Canada should contact their Toro Distributor (Dealer) to obtain guarantee policies for your country, province or state. If for any reason you are dissatisfied with your Distributor's service or have difficulty obtaining guarantee information, contact the TORO importer. If all other remedies fail, you may contact us at The Toro Company.

MAINTENANCE RECORD

Date								

Compliance with Radio Interference Regulations Certified.
Certifie Conforme au Reglement sur le Brouillage Radioelectrique.

Litho in U.S.A.