FORM NO. 3316–131

TORO®

MODEL NO. 20912B–3900001 & UP

PARTS CATALOG

48cm REAR BAGGING MOWER

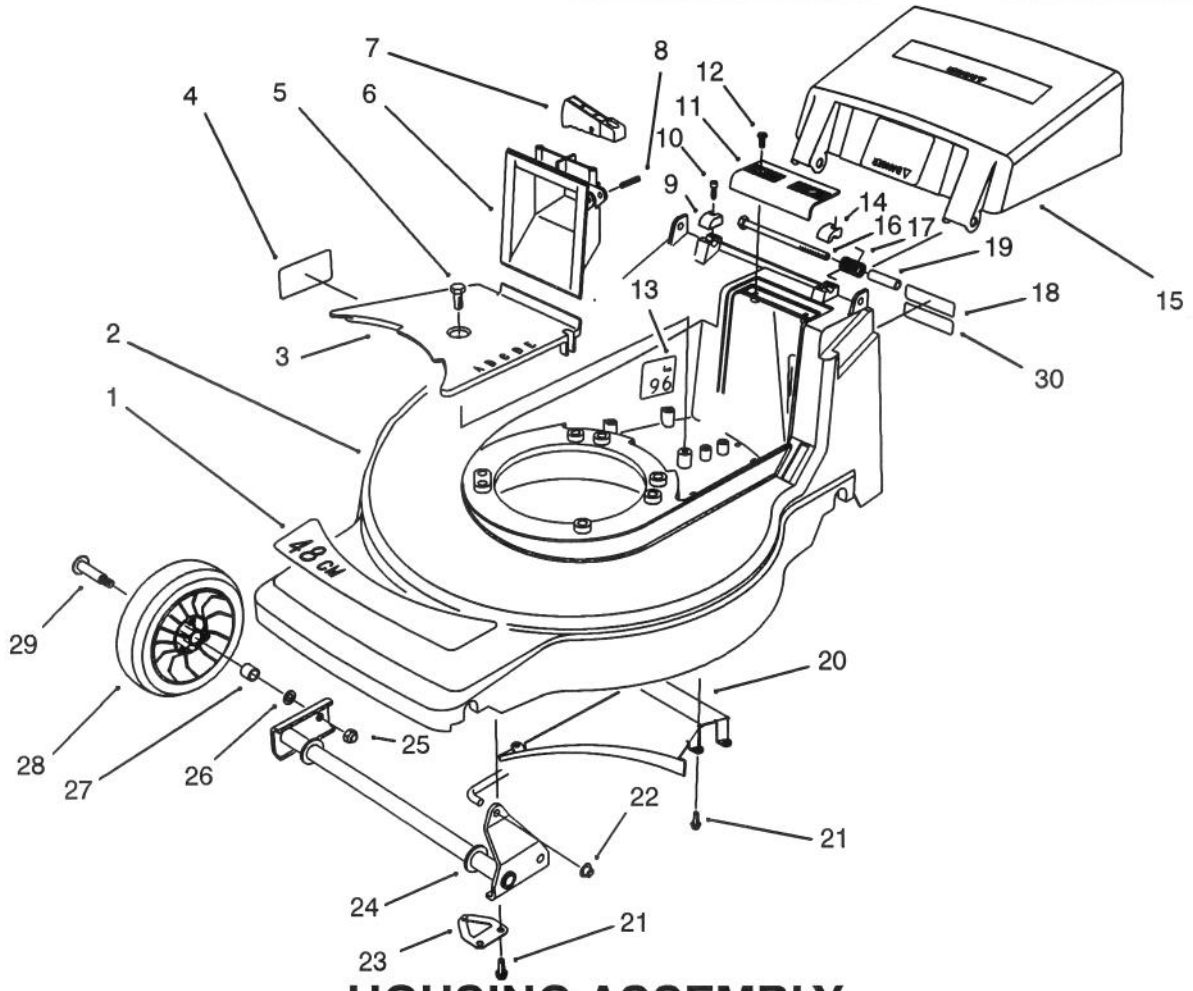

C–1507

HOUSING ASSEMBLY

Ref. No.	Part No.	Description	No. Used
1	71–9860	Decal – 48cm	1
2	16–1669	Housing – 48cm (Incl. Ref. #4)	1
3	71–7920	Cover – Belt	1
4	62–3860	Decal – Danger	1
5	32144–70	Screw – Hex. Flange Hd.	1
6	71–7870	Grip – Lower	1
7	71–7930	Trigger – H.O.C.	1
8	3284–5	Pin – Roll	1
9	71–7910	Cap – Hinge Bolt R.H.	1
10	65–5210	Screw – Thread Forming	2
11	71–7860	Grip – Upper	1
12	32144–97	Screw – Thread Forming	2
13		Decal – Noise Rating	1
14	71–7900	Cap – Hinge Bolt L.H.	1
15	71–9801	Door – Discharge	1

Ref. No.	Part No.	Description	No. Used
16	322–29	Screw – Cap Hex. Hd.	2
17	71–9840	Spring – Door	2
18	66–0680	Decal – French Regulation	1
19	71–8580	Spacer – Door	2
20	71–7990	Ramp – Discharge	1
21	32144–4	Screw – Thread Forming	8
22	32112–11	Nut – Push	1
23	71–8830	Retainer – Shaft	2
24	71–7820	Pivot – Front	1
25	3296–5	Nut – Lock	2
26	40–1940	Washer – Wheel	2
27	27–6250	Bushing – Wheel	4
28	46–1113	Wheel & Tire Assembly (Incl. Ref. #28)	2
29	27–6230	Bolt – Wheel	2
30		Decal – Power Rating	1

©The TORO Company – 1993
All Rights Reserved

TPS

3316–131

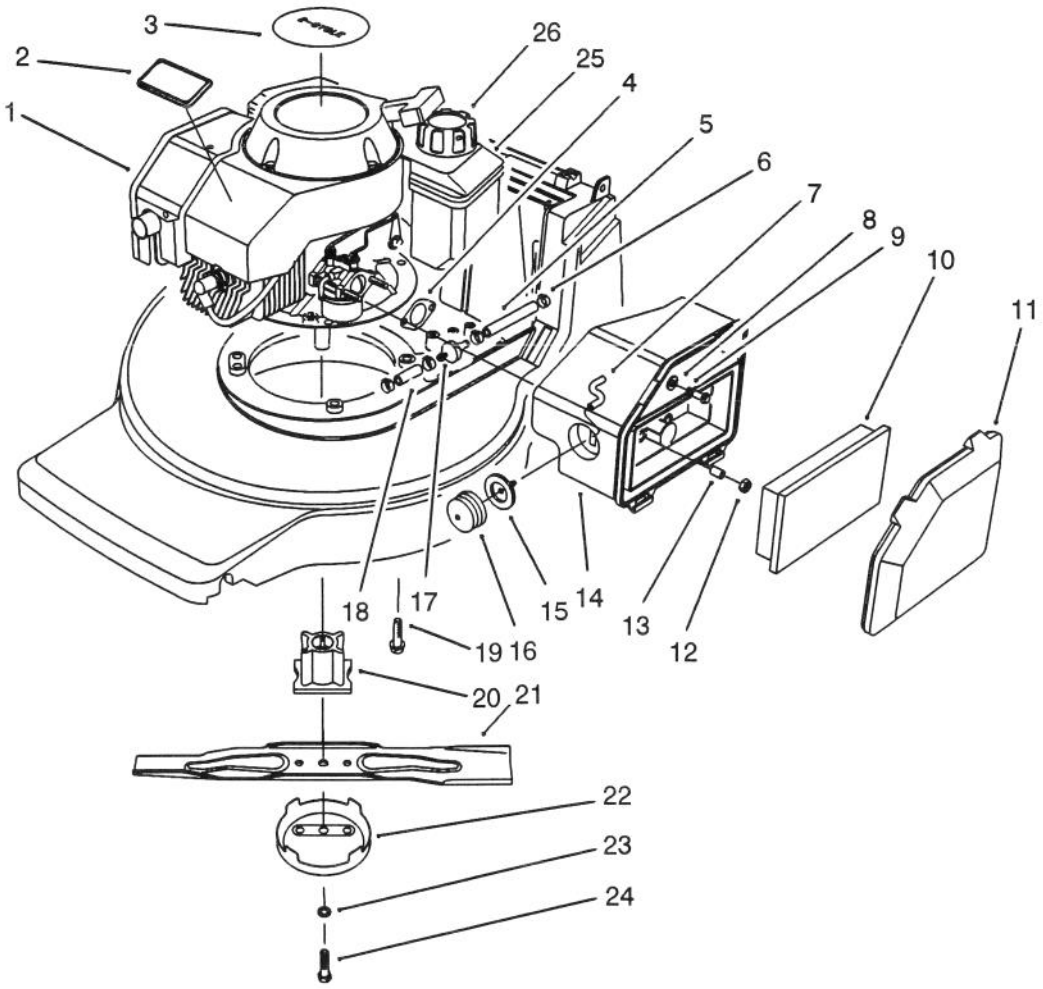

C–1521

ENGINE ASSEMBLY

Ref. No.	Part No.	Description	No. Used
1	77–2800	Engine – 2 Cycle	1
2	46–8290	Plate – TORO Logo	1
3	57–3110	Decal – Recoil	1
4	81–0090	Gasket – Air Cleaner	1
5	51–3215	Line – Fuel	1
6	2412–95	Clamp – Fuel Line	4
7	44–3172	Hose – Primer	1
8	3256–16	Washer – Flat	1
9	51–2690	Screw – Hex. Flange Hd.	1
10	63–9380	Element – Air Cleaner	1
11	63–9340	Cover – Air Cleaner	1
12	50–7180	Nut – Lock	2
13	62–3980	Spacer	2

Ref. No.	Part No.	Description	No. Used
14	63–9330	Body – Air Cleaner	1
15	44–2750	Body – Primer	1
16	66–7460	Bulb – Primer	1
17	71–9280	Filter – Fuel	1
18	51–3216	Line – Fuel	1
19	3234–24	Bolt – Engine	3
20	71–7940	Retainer – Blade	1
21	71–8210	Blade – 48cm	1
22	80–2770	Cup – Anti–Scalp	1
23	3253–22	Washer – Lock	1
24	26–0672	Bolt – Blade	1
25	81–0162	Fuel Tank Ass'y	1
26	55–3575	Cap – Fuel	1

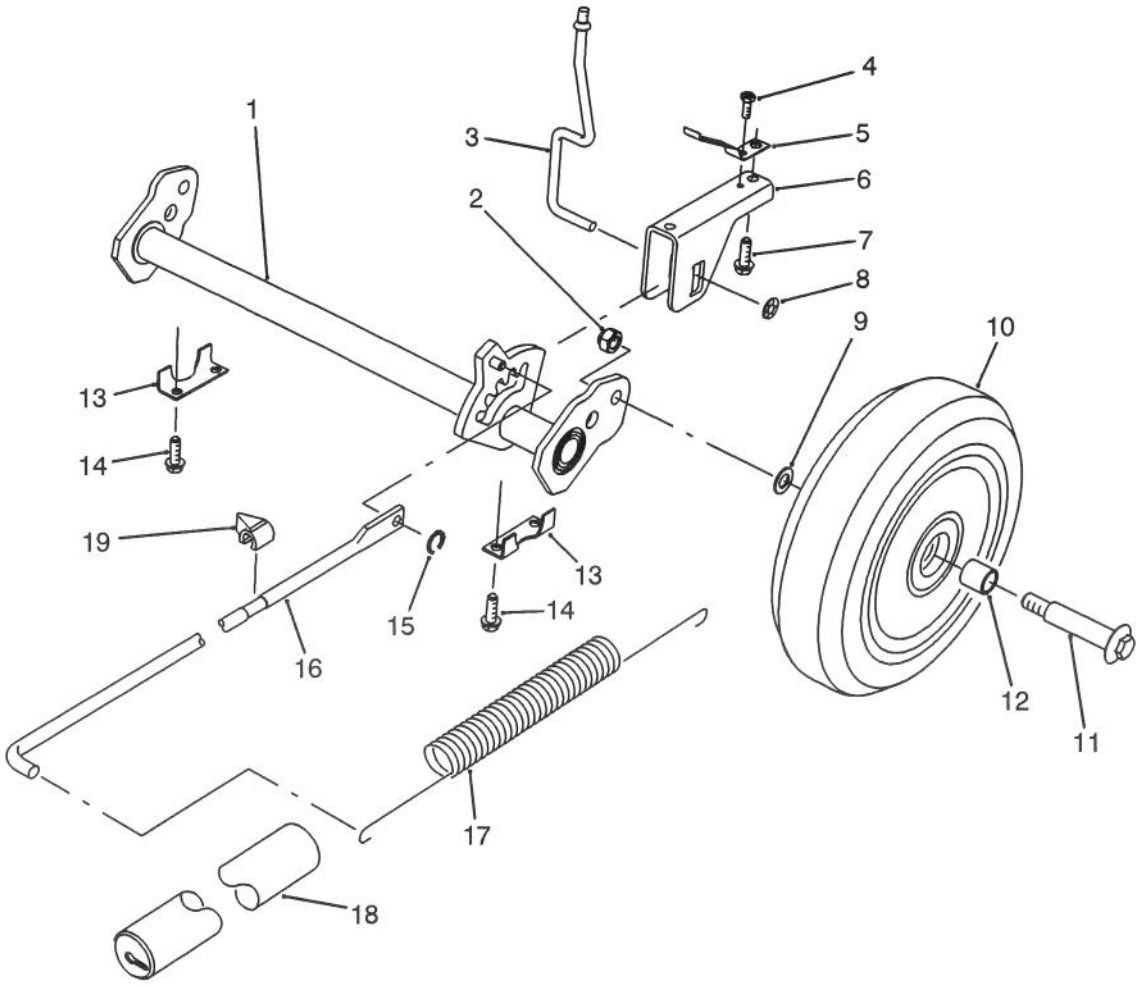

C–0363

H. P. REAR AXLE ASSEMBLY

Ref. No.	Part No.	Description	No. Used
1	71–7800	Pivot – Rear H.P.	1
2	3296–5	Nut – Lock	2
3	71–7840	Rod – Trigger	1
4	32144–31	Screw – Thread Forming	1
5	71–8060	Spring – Trigger Return	2
6	71–8080	Saddle – H.O.C.	1
7	63–8590	Screw – Thread Forming	2
8	32112–13	Nut – Push	1
9	40–1940	Washer – Wheel	2
10	11–9509	Wheel & Tire Assembly (Incl. Ref. #12)	2

Ref. No.	Part No.	Description	No. Used
11	27–6230	Bolt – Wheel	2
12	27–6250	Bushing – Wheel	4
13	71–7770	Plate – Rear Securing	2
14	32144–4	Screw – Thread Forming	4
15	32151–93	Ring – Grip	1
16	71–7970	Rod – Link	1
17	71–7740	Spring – Counterbalance	1
18	71–8450	Cover – Spring	1
19	71–7980	Indicator – H.O.C.	1

3316–131

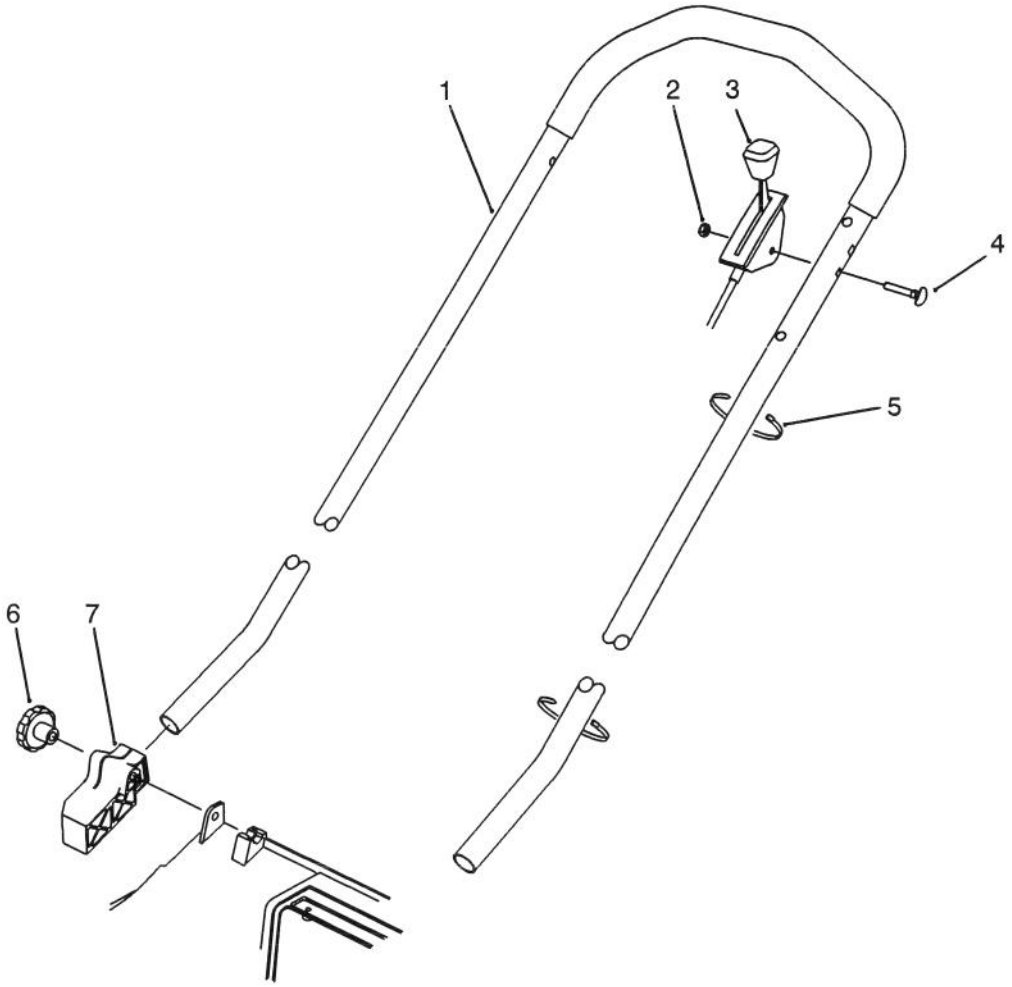

C–0366

H. P. HANDLE ASSEMBLY

Ref. No.	Part No.	Description	No. Used
1	71–9020	Handle	1
2	3296–56	Nut – Lock	1
3	71–8382	Control – Throttle Bend Type #2 Sheath Lg. 44.00 Wire Lg. 2.50	 1
4	46–6430	Screw – Cap Hex. Hd.	1
5	3290–378	Tie – Cable	2
6	19–4050	Knob – Handle	2
7	71–8090	Mount – Handle L.H.	1
*	71–8100	Mount – Handle R.H.	1

*Not Illustrated

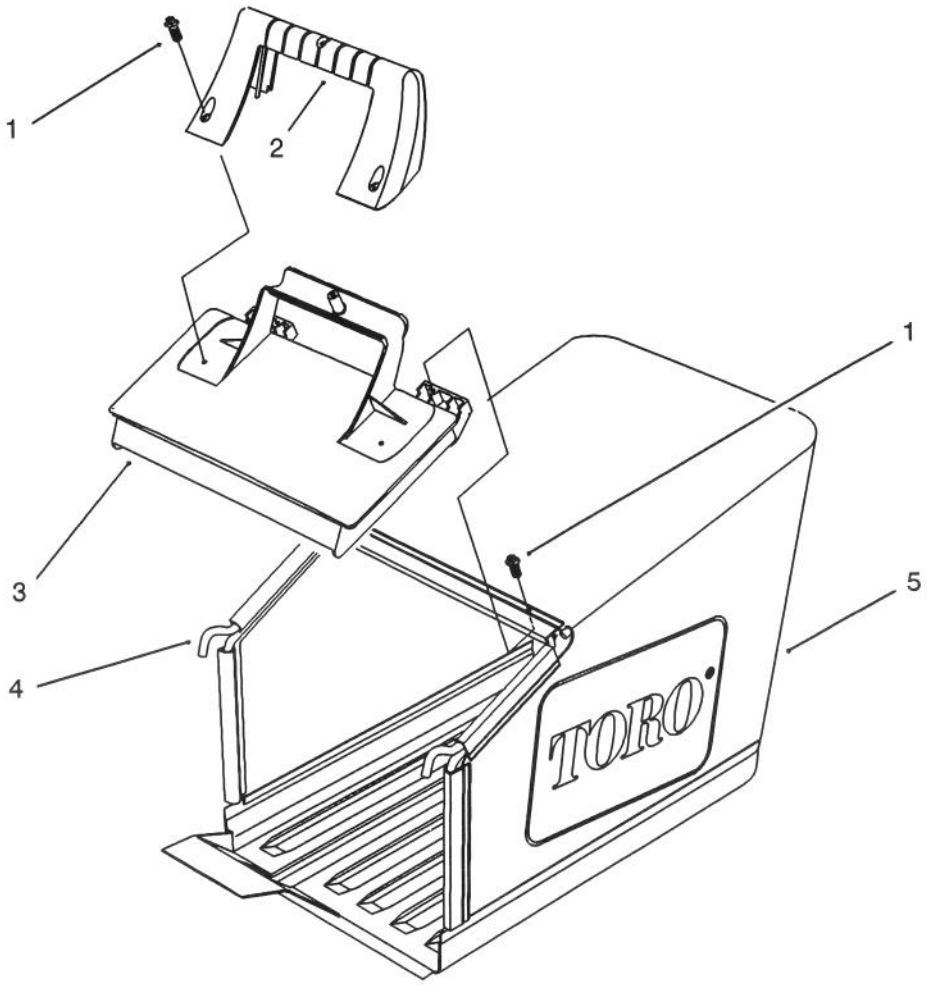

C–1509

GRASS BAG ASSEMBLY

Ref. No.	Part No.	Description	No. Used
1	32144–111	Screw – Hex Washer Hd. Thr'd Form.	5
2	71–9480	Handle – Door	1

Ref. No.	Part No.	Description	No. Used
3	71–9470	Door – Bag	1
4	71–9900	Frame – Bag	1
5	71–9460	Bag – Grass	1

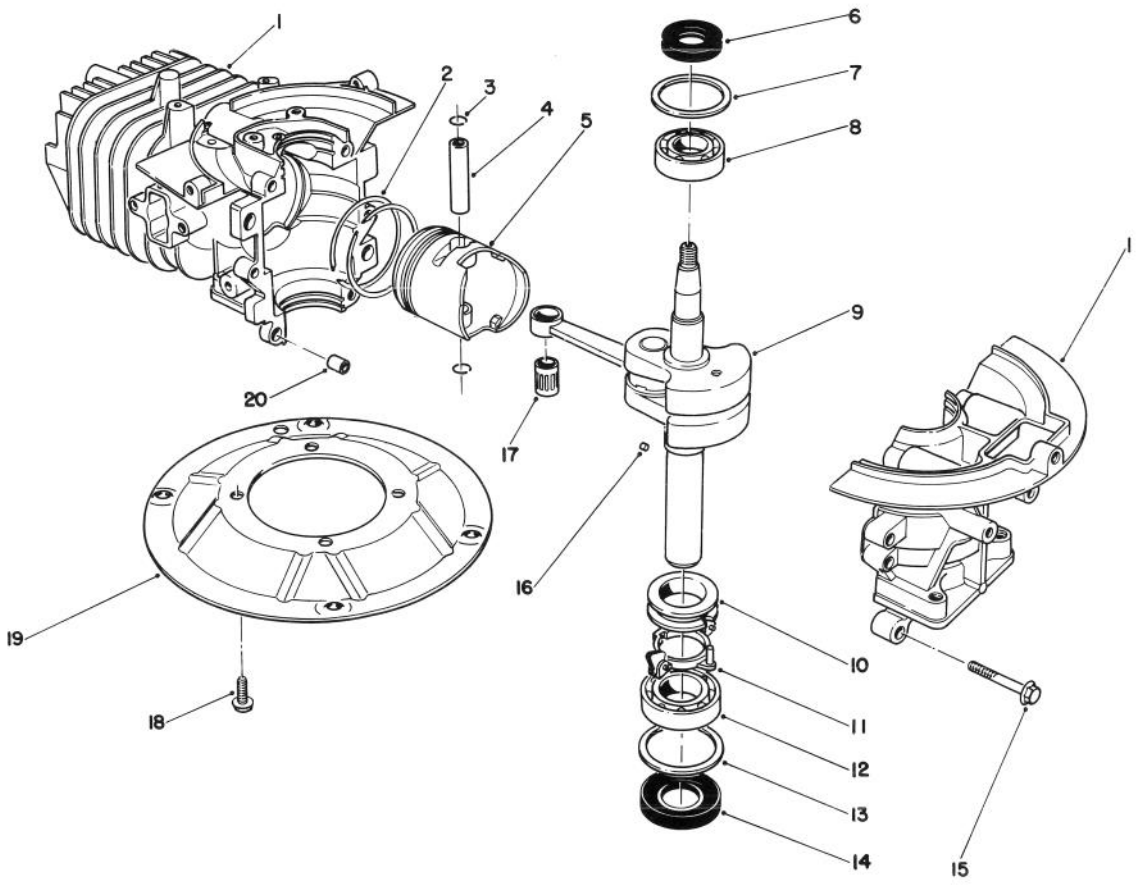

T–0663

CRANK SHAFT ASSEMBLY
(Model No. 47PN2–6)

Ref. No.	Part No.	Description	No. Used
1	81–2800	Crankcase/Cylinder Ass'y	1
2	81–0590	Ring Set	1
3	81–0620	Circlip	2
4	81–0600	Pin – Wrist	1
5	81–0580	Piston (58mm)	1
6	81–0720	Oil Seal – Upper	1
7	81–0710	Thrust Washer – Upper	1
8	81–0690	Bearing – Upper (20mm)	1
9	81–4600	Crankshaft/Connecting Rod Assembly	1
10	81–0770	Collar – Governor	1

Ref. No.	Part No.	Description	No. Used
11	81–0750	Bracket – Governor Arm	1
12	81–0700	Bearing – Lower (25mm)	1
13	81–0730	Thrust Washer – Lower	1
14	81–0740	Oil Seal – Lower	1
15	81–0540	Bolt (30mm Lg.)	6
16	81–0760	Pin – Crankshaft	1
17	81–0610	Bearing – Wrist Pin	1
18	81–0570	Bolt (20mm Lg.)	4
19	81–0560	Plate – Mounting	1
20	81–0520	Pin – Crankcase	2
*	12–7699	Short Block Assembly	1

*Not Illustrated

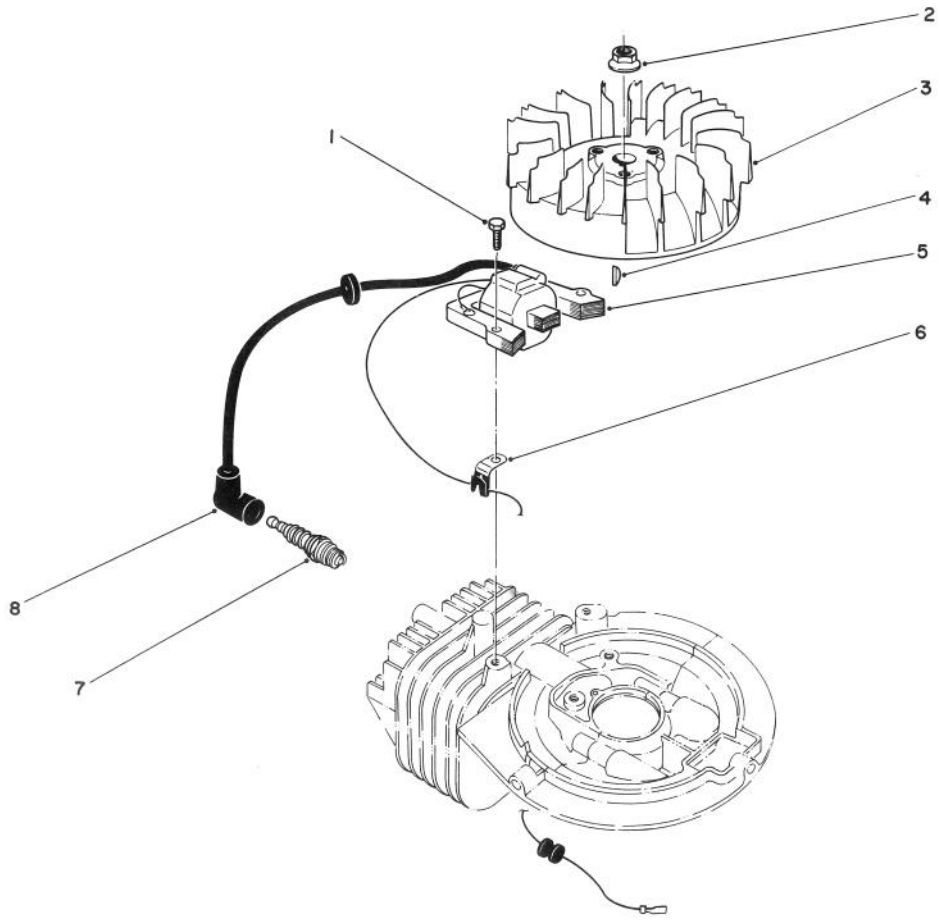

C–0176

IGNITION ASSEMBLY (Model No. 47PN2–6)

Ref. No.	Part No.	Description	No. Used
1	81–5680	Capscrew – Hex Hd.	1
2	81–1330	Nut	1
3	81–2810	Flywheel – Magneto	1
4	81–2370	Key – Flywheel	1
5	81–2820	Coil/Ignition Assembly	1

Ref. No.	Part No.	Description	No. Used
6	81–1480	Clamp	1
7	50–1170	Spark Plug	1
8	81–1500	Cover – Spark Plug	1
*	41–7650	Puller – Flywheel	1

*Not Illustrated

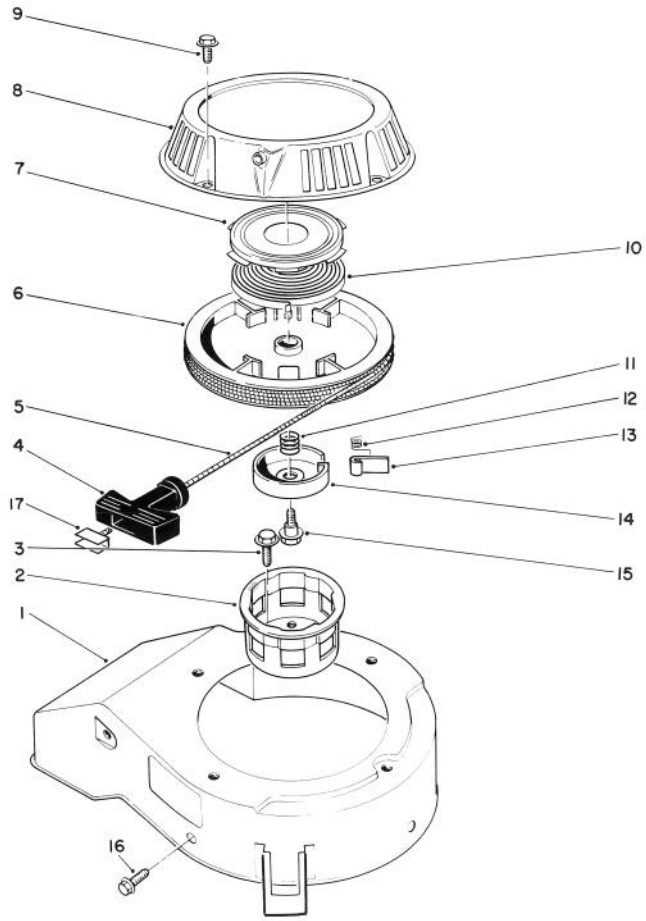

T–0668

RECOIL ASSEMBLY
(Model No. 47PN2–6)

Ref. No.	Part No.	Description	No. Used
1	81–2070	Cover – Cooling Fan	1
2	81–1290	Pulley – Starter Cup	1
3	81–1300	Bolt (16mm Lg.)	3
4	81–1630	Handle – Recoil	1
5	81–1270	Rope	1
6	81–1210	Reel – Rope Pulley	1
7		Retainer Cup – Recoil Spring	1
8	81–2090	Case – Recoil	1
9	81–1280	Bolt	4
10		Spring – Recoil	1
11	81–1240	Spring – Compression	1

Ref. No.	Part No.	Description	No. Used
12	81–1220	Spring – Dog	1
13	81–1230	Dog	1
14	81–1250	Retainer – Dog	1
15	81–1260	Bolt – Shoulder	1
16	53–1340	Bolt – Self Tapping	3
17	81–5760	Insert – Recoil Handle	1
*	81–2300	Spring & Retainer (Incl. Ref. #7 & 10)	1
*	81–5480	Starter Assembly (Incl. Ref. #4–8, & 10–15)	1

*Not Illustrated

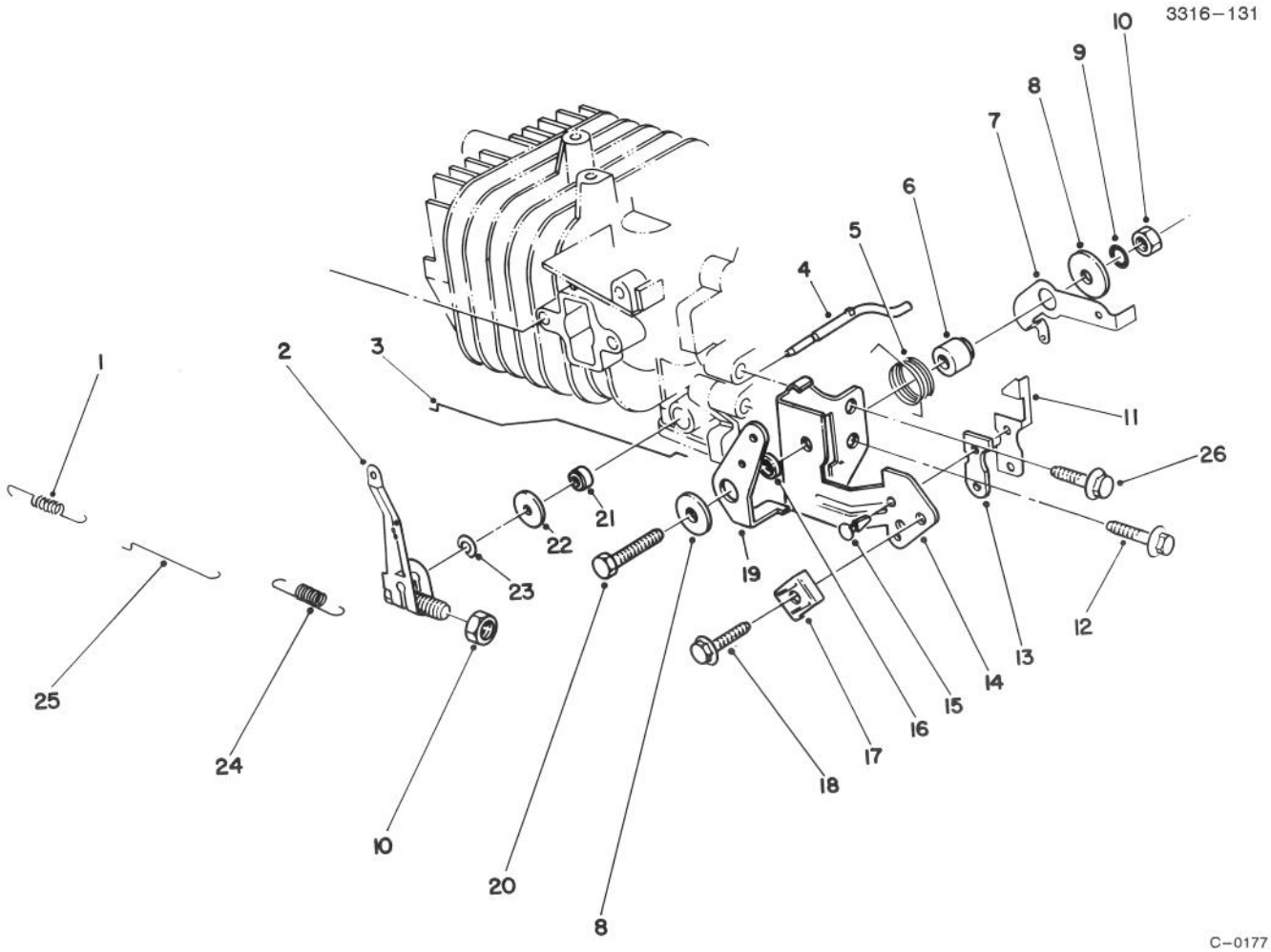

GOVERNOR ASSEMBLY
(Model No. 47PN2–6)

Ref. No.	Part No.	Description	No. Used
1	81–0920	Spring – Carburetor Rod	1
2	81–5420	Governor Arm/Bolt Ass'y	1
3	81–5410	Rod – Choke	1
4	81–0840	Shaft – Governor	1
5	81–2460	Spring – Choke Control Lever	1
6	81–1770	Spacer – Governor Spring Lever	1
7	81–2850	Lever – Governor Spring	1
8	81–1750	Washer – Choke Control Lever	2
9	81–1450	Washer – Lock	1
10	81–0900	Nut	2
11	81–1840	Terminal – Kill Switch	1
12	81–0540	Bolt – Self Tapping	1

Ref. No.	Part No.	Description	No. Used
13	81–1830	Insulator – Kill Switch	1
14	81–2420	Bracket – Throttle Control	1
15	81–4530	Rivet – Kill Switch	2
16	81–2470	Spacer – Choke Control Lever	1
17	81–2430	Clamp – Cable	1
18	50–0130	Bolt – Cable Clamp	1
19	81–1710	Lever – Choke Control	1
20	81–1730	Bolt – Throttle Control Brkt.	1
21	81–0850	Oil Seal – Governor Shaft	1
22	81–0860	Washer	1
23	81–0870	E–Ring	1
24	81–2830	Spring – Governor	1
25	81–0910	Rod – Carburetor	1
26	81–1170	Bolt – Self Tapping	1

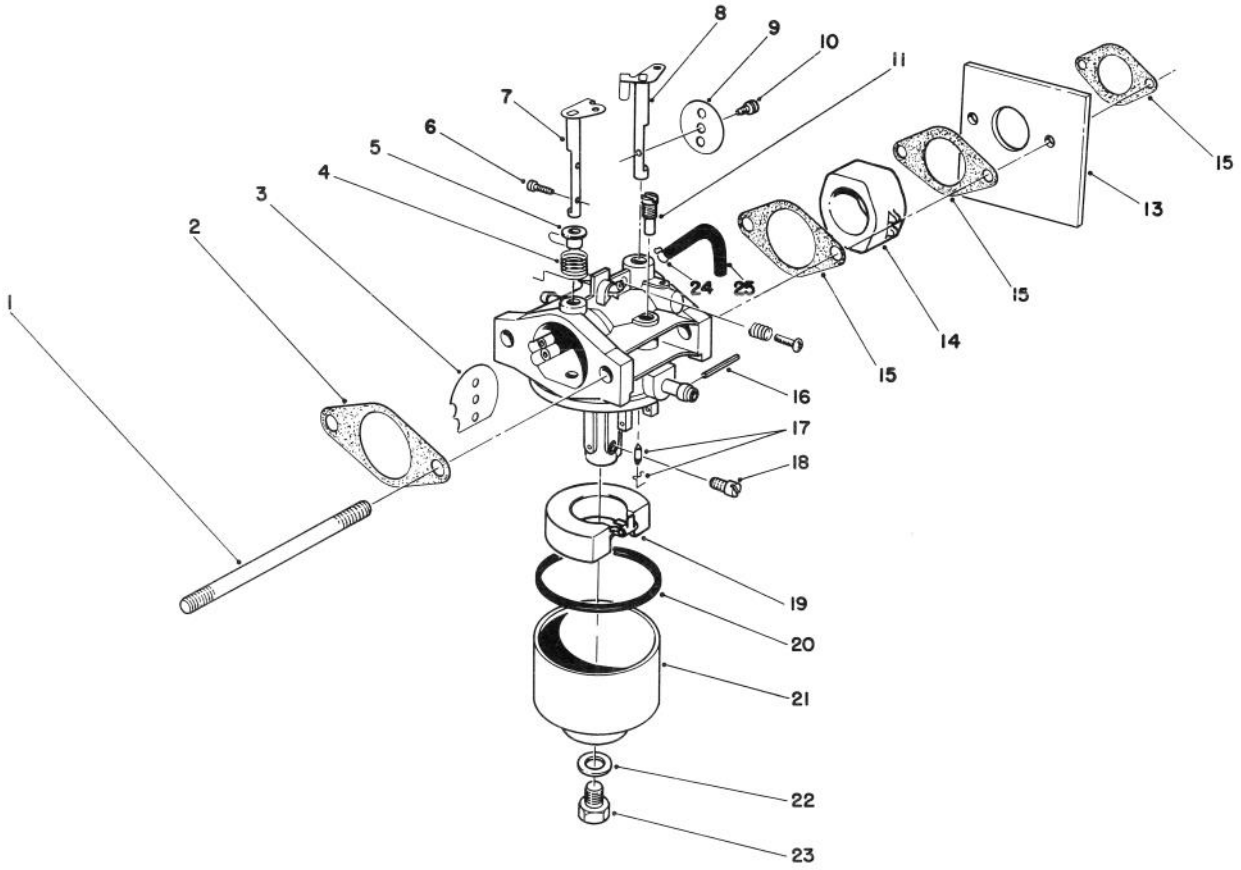

C–0191

CARBURETOR ASSEMBLY (Model No. 47PN2–6)

Ref. No.	Part No.	Description	No. Used
1	81–5450	Stud Bolt – Carburetor	2
2	81–0090	Gasket	2
3	81–0240	Valve – Choke	1
4	81–0230	Spring – Choke	1
5	81–0220	Bushing – Choke Valve	1
6	81–2160	Screw	2
7	81–1950	Shaft – Choke	1
8	81–0250	Shaft – Throttle	1
9	81–0260	Valve – Throttle	1
10	81–0270	Screw – Throttle Valve	1
11	81–1030	Jet – Pilot (#40)	1
13	81–5490	Shield – Carburetor	1
14	81–5440	Insulator – Carburetor	1
15	81–0780	Gasket	3
16	81–5600	Pin	1
17	81–4910	Needle Valve/Spring Wire	1

Ref. No.	Part No.	Description	No. Used
18	81–1060	Jet – Main (#75)	1
*	81–2340	Jet – Main (#72.5) High Alt., Above 6000 (Optional)	1
19	81–0970	Float	1
20	81–1010	Gasket – Float Bowl	1
21	81–5660	Bowl – Float	1
22	81–1020	Gasket – Bowl Screw	1
23	81–5670	Screw – Bowl	1
24	81–5460	Clamp – Vent Tube	1
25	81–5470	Tube – Vent	1
*	12–6379	Carburetor Kit (Incl. Ref. #2, 15, 17, 20, & 22)	1
*	81–5740	Carburetor Ass'y Complete	1
*	81–5810	Needle Valve Seat Kit	1

*Not Illustrated

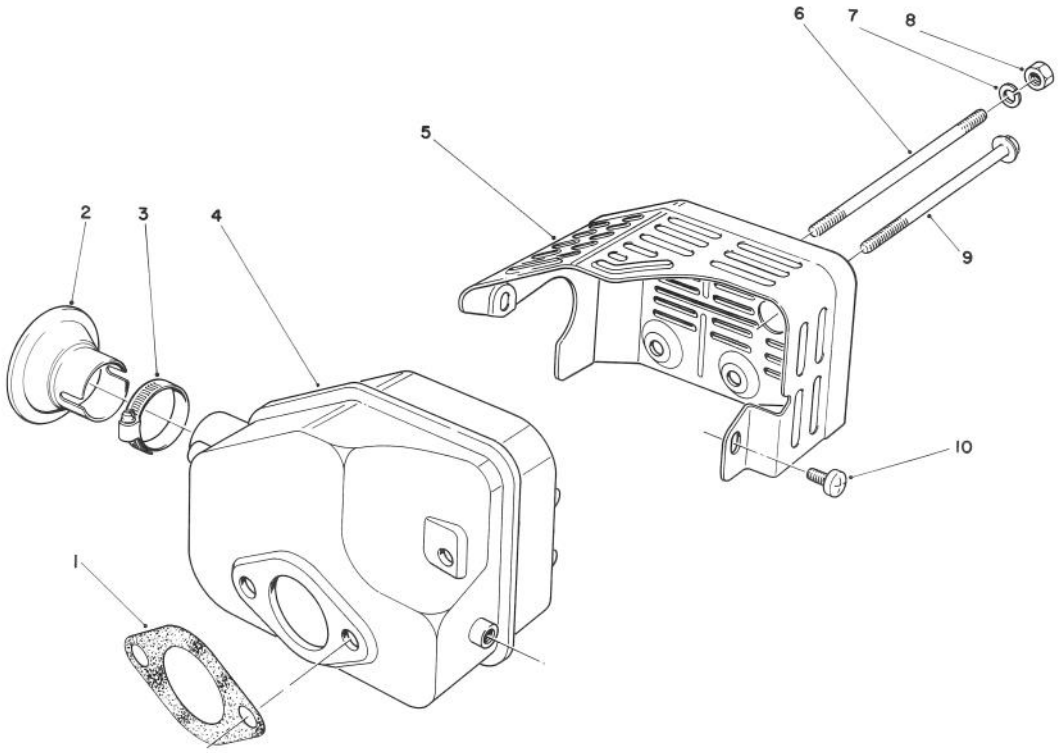

T–0667

MUFFLER ASSEMBLY (Model No. 47PN2–6)

Ref. No.	Part No.	Description	No. Used
1	81–1080	Gasket – Muffler	1
*2	81–0200	Spark Arrester	1
†3		Clamp	1
4	81–5690	Muffler	1
5	81–2450	Cover – Muffler	1

Ref. No.	Part No.	Description	No. Used
6	81–1100	Bolt	2
7	81–1120	Washer – Lock	2
8	81–1110	Nut	2
9	81–1150	Bolt – Self Tapping	1
10	81–1140	Screw – Phillips Hd.	2

*Optional Equipment
†Obtain Locally

TORO PART NUMBER INDEX

Part No.	Description	Pg. No.	Ref. No.	Qty.
	Decal – Noise Rating	1	13	1
	Decal – Power Rating	1	30	1
11–9509	Wheel & Tire Assembly	3	10	2
12–6379	Carburetor Kit	10	*	1
12–7699	Short Block Assembly	6	*	1
16–1669	Housing – 48cm	1	2	1
19–4050	Knob – Handle	4	6	2
26–0672	Bolt – Blade	2	24	1
27–6230	Bolt – Wheel	3	11	2
27–6230	Bolt – Wheel	1	29	2
27–6250	Bushing – Wheel	3	12	4
27–6250	Bushing – Wheel	1	27	4
40–1940	Washer – Wheel	3	9	2
40–1940	Washer – Wheel	1	26	2
41–7650	Puller – Flywheel	7	*	1
44–2750	Body – Primer	2	15	1
44–3172	Hose – Primer	2	7	1
46–1113	Wheel & Tire Assembly	1	28	2
46–6430	Screw – Cap Hex. Hd.	4	4	1
46–8290	Plate – TORO Logo	2	2	1
50–0130	Bolt – Cable Clamp	9	18	1
50–1170	Spark Plug	7	7	1
50–7180	Nut – Lock	2	12	2
51–2690	Screw – Hex. Flange Hd.	2	9	1
51–3215	Line – Fuel	2	5	1
51–3216	Line – Fuel	2	18	1
53–1340	Bolt – Self Tapping	8	16	3
55–3575	Cap – Fuel	2	26	1
57–3110	Decal – Recoil	2	3	1
62–3860	Decal – Danger	1	4	1
62–3980	Spacer	2	13	2
63–8590	Screw – Thread Forming	3	7	2
63–9330	Body – Air Cleaner	2	14	1
63–9340	Cover – Air Cleaner	2	11	1
63–9380	Element – Air Cleaner	2	10	1
65–5210	Screw – Thread Forming	1	10	2
66–0680	Decal – French Regulation	1	18	1
66–7460	Bulb – Primer	2	16	1
71–7740	Spring – Counterbalance	3	17	1
71–7770	Plate – Rear Securing	3	13	2
71–7800	Pivot – Rear H.P.	3	1	1
71–7820	Pivot – Front	1	24	1
71–7840	Rod – Trigger	3	3	1
71–7860	Grip – Upper	1	11	1
71–7870	Grip – Lower	1	6	1
71–7900	Cap – Hinge Bolt L.H.	1	14	1
71–7910	Cap – Hinge Bolt R.H.	1	9	1
71–7920	Cover – Belt	1	3	1
71–7930	Trigger – H.O.C.	1	7	1
71–7940	Retainer – Blade	2	20	1
71–7970	Rod – Link	3	16	1
71–7980	Indicator – H.O.C.	3	19	1
71–7990	Ramp – Discharge	1	20	1
71–8060	Spring – Trigger Return	3	5	2
71–8080	Saddle – H.O.C.	3	6	1
71–8090	Mount – Handle L.H.	4	7	1
71–8100	Mount – Handle R.H.	4	*	1
71–8210	Blade – 48cm	2	21	1
71–8381	Control – Throttle	4	3	1
71–8450	Cover – Spring	3	18	1
71–8580	Spacer – Door	1	19	2
71–8830	Retainer – Shaft	1	23	2
71–9020	Handle	4	1	1
71–9280	Filter – Fuel	2	17	1
71–9460	Bag – Grass	5	5	1
71–9470	Door – Bag	5	3	1
71–9480	Handle – Door	5	2	1
71–9801	Door – Discharge	1	15	1
71–9840	Spring – Door	1	17	2
71–9860	Decal – 48cm	1	1	1
71–9900	Frame – Bag	5	4	1
77–2800	Engine – 2 Cycle	2	1	1
80–2770	Cup – Anti–Scalp	2	22	1
81–0090	Gasket	10	2	2
81–0090	Gasket – Air Cleaner	2	4	1
81–0162	Fuel Tank Ass'y	2	25	1
81–0200	Spark Arrester	11	*2	1
81–0220	Bushing – Choke Valve	10	5	1
81–0230	Spring – Choke	10	4	1
81–0240	Valve – Choke	10	3	1
81–0250	Shaft – Throttle	10	8	1
81–0260	Valve – Throttle	10	9	1
81–0270	Screw – Throttle Valve	10	10	1
81–0520	Pin – Crankcase	6	20	2
81–0540	Bolt (30mm Lg.)	6	15	6
81–0540	Bolt – Self Tapping	9	12	1
81–0560	Plate – Mounting	6	19	1
81–0570	Bolt (20mm Lg.)	6	18	4
81–0580	Piston (58mm)	6	5	1
81–0590	Ring Set	6	2	1
81–0600	Pin – Wrist	6	4	1
81–0610	Bearing – Wrist Pin	6	17	1
81–0620	Circlip	6	3	2
81–0690	Bearing – Upper (20mm)	6	8	1
81–0700	Bearing – Lower (25mm)	6	12	1
81–0710	Thrust Washer – Upper	6	7	1
81–0720	Oil Seal – Upper	6	6	1
81–0730	Thrust Washer – Lower	6	13	1
81–0740	Oil Seal – Lower	6	14	1
81–0750	Bracket – Governor Arm	6	11	1
81–0760	Pin – Crankshaft	6	16	1
81–0770	Collar – Governor	6	10	1
81–0780	Gasket	10	15	3
81–0840	Shaft – Governor	9	4	1
81–0850	Oil Seal – Governor Shaft	9	21	1
81–0860	Washer	9	22	1
81–0870	E–Ring	9	23	1
81–0900	Nut	9	10	2
81–0910	Rod – Carburetor	9	25	1
81–0920	Spring – Carburetor Rod	9	1	1
81–0970	Float	10	19	1
81–1010	Gasket – Float Bowl	10	20	1
81–1020	Gasket – Bowl Screw	10	22	1
81–1030	Jet – Pilot (#40)	10	11	1
81–1060	Jet – Main (#75)	10	18	1
81–1080	Gasket – Muffler	11	1	1
81–1100	Bolt	11	6	2
81–1110	Nut	11	8	2
81–1120	Washer – Lock	11	7	2
81–1140	Screw – Phillips Hd.	11	10	2
81–1150	Bolt – Self Tapping	11	9	1
81–1170	Bolt – Self Tapping	9	26	1
81–1210	Reel – Rope Pulley	8	6	1
81–1220	Spring – Dog	8	12	1
81–1230	Dog	8	13	1
81–1240	Spring – Compression	8	11	1
81–1250	Retainer – Dog	8	14	1
81–1260	Bolt – Shoulder	8	15	1
81–1270	Rope	8	5	1
81–1280	Bolt	8	9	4
81–1290	Pulley – Starter Cup	8	2	1
81–1300	Bolt (16mm Lg.)	8	3	3
81–1330	Nut	7	2	1
81–1450	Washer – Lock	9	9	1
81–1480	Clamp	7	6	1
81–1500	Cover – Spark Plug	7	8	1
81–1630	Handle – Recoil	8	4	1
81–1710	Lever – Choke Control	9	19	1
81–1730	Bolt – Throttle Control Brkt.	9	20	1
81–1750	Washer – Choke Control	9	8	2
81–1770	Spacer – Governor Spring	9	6	1
81–1830	Insulator – Kill Switch	9	13	1
81–1840	Terminal – Kill Switch	9	11	1
81–1950	Shaft – Choke	10	7	1

*Not Illustrated

TORO PART NUMBER INDEX (Cont.)

Part No.	Description	Pg. No.	Ref. No.	Qty.
81–2070	Cover – Cooling Fan	8	1	1
81–2090	Case – Recoil	8	8	1
81–2160	Screw	10	6	2
81–2300	Spring & Retainer	8	*	1
81–2340	Jet – Main (#72.5) High Alt.,	10	*	1
81–2370	Key – Flywheel	7	4	1
81–2420	Bracket – Throttle Control	9	14	1
81–2430	Clamp – Cable	9	17	1
81–2450	Cover – Muffler	11	5	1
81–2460	Spring – Choke Control	9	5	1
81–2470	Spacer – Choke Control	9	16	1
81–2800	Crankcase/Cylinder Ass'y	6	1	1
81–2810	Flywheel – Magneto	7	3	1
81–2820	Coil/Ignition Assembly	7	5	1
81–2830	Spring – Governor	9	24	1
81–2850	Lever – Governor Spring	9	7	1
81–4530	Rivet – Kill Switch	9	15	2
81–4600	Crankshaft/Connecting Rod	6	9	1
81–4910	Needle Valve/Spring Wire	10	17	1
81–5410	Rod – Choke	9	3	1
81–5420	Governor Arm/Bolt Ass'y	9	2	1
81–5440	Insulator – Carburetor	10	14	1
81–5450	Stud Bolt – Carburetor	10	1	2
81–5460	Clamp – Vent Tube	10	24	1
81–5470	Tube – Vent	10	25	1
81–5480	Starter Assembly	8	*	1
81–5490	Shield – Carburetor	10	13	1
81–5600	Pin	10	16	1
81–5660	Bowl – Float	10	21	1
81–5670	Screw – Bowl	10	23	1
81–5680	Capscrew – Hex Hd.	7	1	1
81–5690	Muffler	11	4	1
81–5740	Carburetor Ass'y Complete	10	*	1
81–5760	Insert – Recoil Handle	8	17	1
81–5810	Needle Valve Seat Kit	10	*	1
2412–95	Clamp – Fuel Line	2	6	4
322–29	Screw – Cap Hex. Hd.	1	16	2
3234–24	Bolt – Engine	2	19	3
3253–22	Washer – Lock	2	23	1
3256–16	Washer – Flat	2	8	1
3284–5	Pin – Roll	1	8	1
3290–378	Tie – Cable	4	5	2
3296–5	Nut – Lock	3	2	2
3296–5	Nut – Lock	1	25	2
3296–56	Nut – Lock	4	2	1
32112–11	Nut – Push	1	22	1
32112–13	Nut – Push	3	8	1
32144–4	Screw – Thread Forming	3	14	4
32144–4	Screw – Thread Forming	1	21	8
32144–31	Screw – Thread Forming	3	4	1
32144–70	Screw – Hex. Flange Hd.	1	5	1
32144–97	Screw – Thread Forming	1	12	2
32144–111	Screw – Hex Washer Hd.	5	1	5
32151–93	Ring – Grip	3	15	1

*Not Illustrated

PRODUCT CHANGES

In an effort to make improvements available to TORO owners as quickly as possible, minor changes are incorporated into Toro's products from time to time that do not become immediately shown in the Parts Catalog. If such a change has been made in your unit, which is not reflected in your manual, see your TORO Distributor or his Authorized TORO Service Dealer for information and part numbers.

COUNTRIES OTHER THAN THE UNITED STATES OR CANADA

Customers who have purchased TORO products exported from the United States or Canada should contact their Toro Distributor (Dealer) to obtain guarantee policies for your country, province or state. If for any reason you are dissatisfied with your Distributor's service or have difficulty obtaining guarantee information, contact the TORO importer. If all other remedies fail, you may contact us at The Toro Company.

MAINTENANCE RECORD

Date								

Compliance with Radio Interference Regulations Certified.
Certifie Conforme au Reglement sur le Brouillage Radioelectrique.

Litho in U.S.A.

MAINTENANCE RECORD

Date								

MAINTENANCE RECORD

Date								