FORM NO. 3316–132

TORO®

MODEL NO. 20917B–3900001 & UP

PARTS CATALOG

48cm REAR BAGGING MOWER

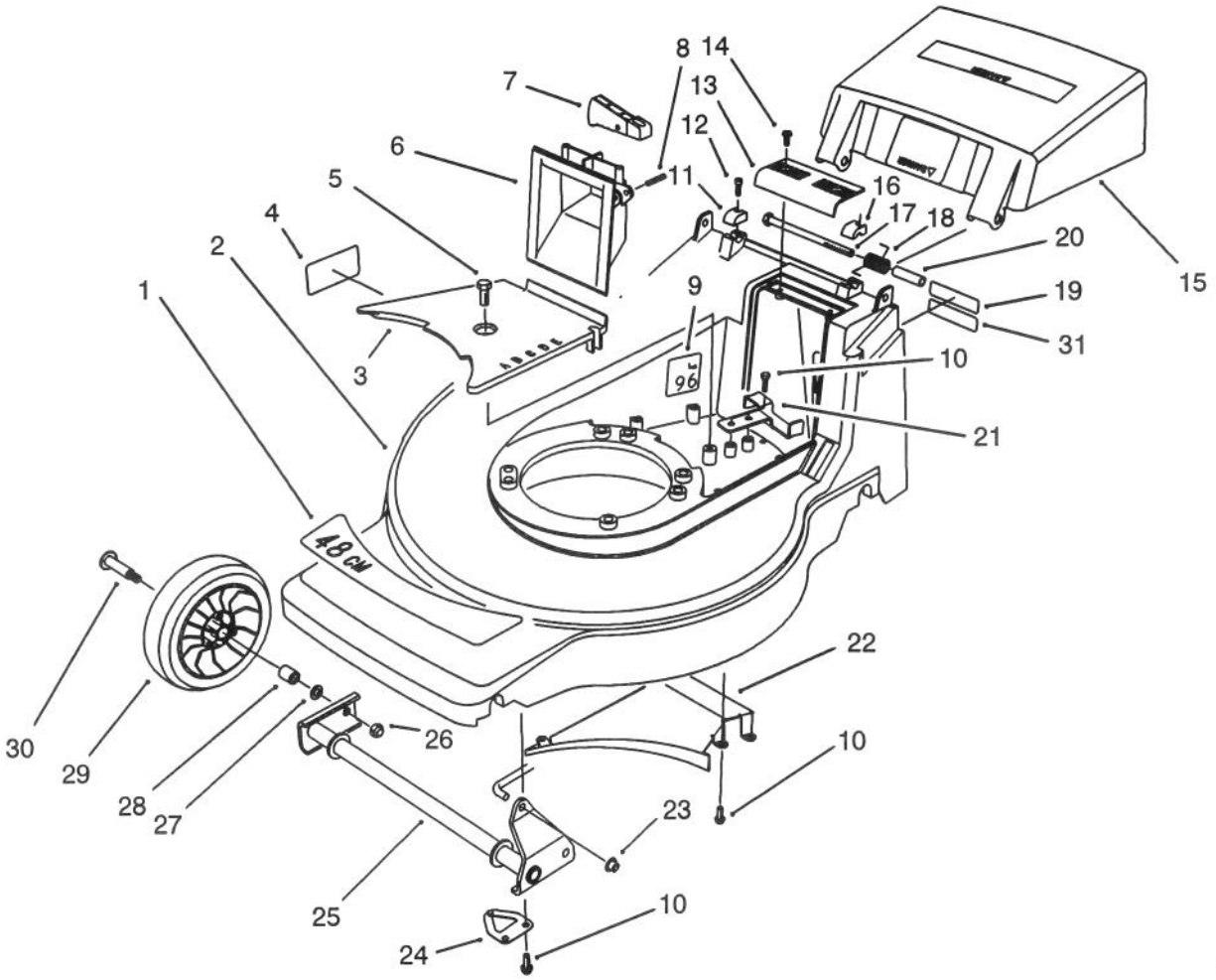

C–1515

HOUSING ASSEMBLY

Ref. No.	Part No.	Description	No. Used
1	71–9860	Decal – 48cm	1
2	16–1669	Housing – 48cm (Incl. Ref. #4)	1
3	71–7920	Cover – Belt	1
4	62–3860	Decal – Danger	1
5	32144–70	Screw – Hex. Flange Hd.	1
6	71–7870	Grip – Lower	1
7	71–7930	Trigger – H.O.C.	1
8	3284–5	Pin – Roll	1
9		Decal – Noise Rating	1
10	32144–4	Screw – Thread Forming	10
11	71–7910	Cap – Hinge Bolt R.H.	1
12	65–5210	Screw – Thread Forming	2
13	71–7860	Grip – Upper	1
14	32144–97	Screw – Thread Forming	2
15	71–9800	Door – Discharge	1
16	71–7900	Cap – Hinge Bolt L.H.	1

Ref. No.	Part No.	Description	No. Used
17	322–29	Screw – Cap Hex. Hd.	2
18	71–9840	Spring – Door	2
19	66–0680	Decal – French Regulation	1
20	71–8580	Spacer – Door	2
21	71–7890	Guide – Belt Rear	1
22	71–7990	Ramp – Discharge	1
23	32112–11	Nut – Push	1
24	71–8830	Retainer – Shaft	2
25	71–7820	Pivot – Front	1
26	3296–5	Nut – Lock	2
27	40–1940	Washer – Wheel	2
28	27–6250	Bushing – Wheel	4
29	46–1113	Wheel & Tire Assembly (Incl. Ref. #30)	2
30	27–6230	Bolt – Wheel	2
31		Decal – Power Rating	1

© The TORO Company – 1993
All Rights Reserved

TPS

3316–132

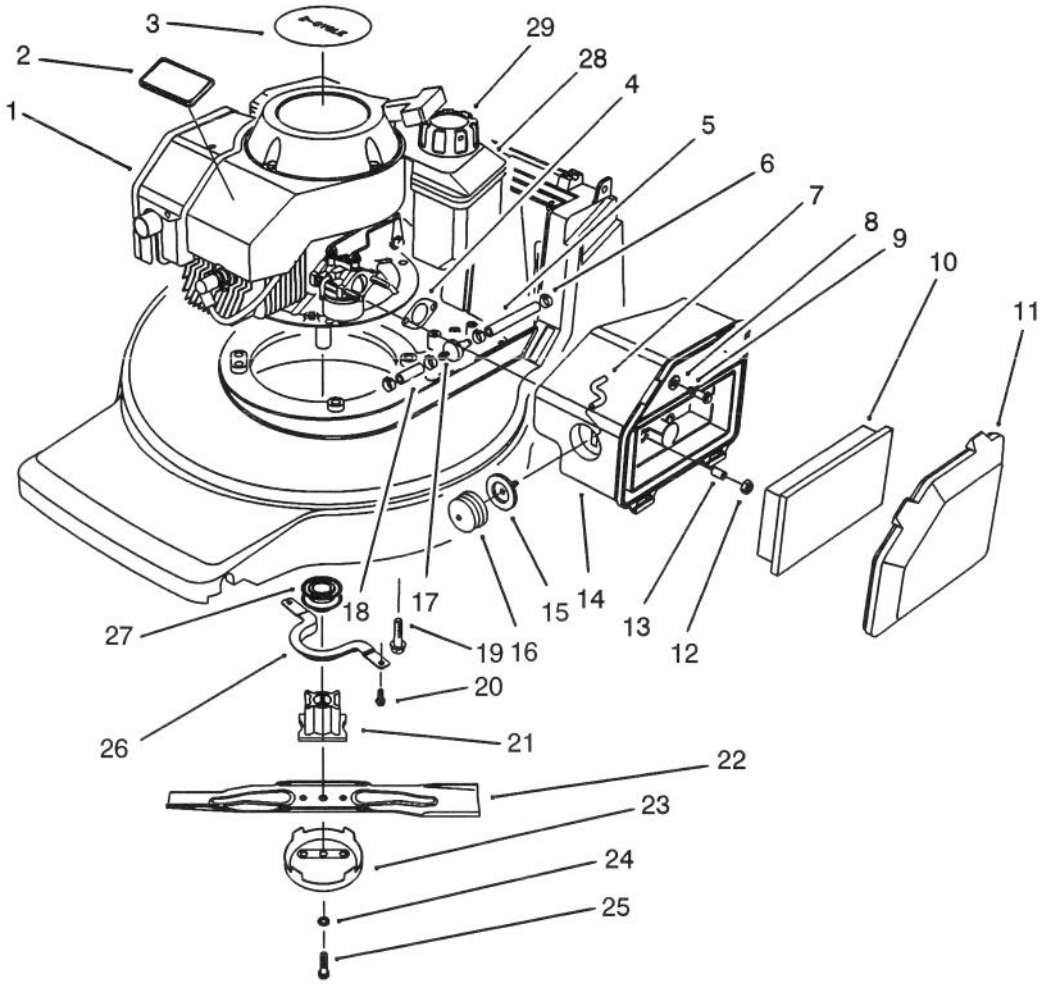

C–1522

ENGINE ASSEMBLY

Ref. No.	Part No.	Description	No. Used
1	77–2800	Engine – 2 Cycle	1
2	46–8290	Plate – TORO Logo	1
3	57–3110	Decal – Recoil	1
4	81–0090	Gasket – Air Cleaner	1
5	51–3215	Line – Fuel	1
6	2412–95	Clamp – Fuel Line	4
7	44–3172	Hose – Primer	1
8	3256–16	Washer – Flat	1
9	51–2690	Screw – Hex. Flange Hd.	1
10	63–9380	Element – Air Cleaner	1
11	63–9340	Cover – Air Cleaner	1
12	50–7180	Nut – Lock	2
13	62–3980	Spacer	2
14	63–9330	Body – Air Cleaner	1
15	44–2750	Body – Primer	1

Ref. No.	Part No.	Description	No. Used
16	66–7460	Bulb – Primer	1
17	71–9280	Filter – Fuel	1
18	51–3216	Line – Fuel	1
19	3234–24	Bolt – Engine	3
20	32144–4	Screw – Thread Forming	2
21	71–7940	Retainer – Blade	1
22	71–8210	Blade – 48cm	1
23	80–2770	Cup – Anti–Scalp	1
24	3253–22	Washer – Lock	1
25	26–0672	Bolt – Blade	2
26	71–7960	Guide – Belt Engine	1
27	62–7550	Pulley – Driver	1
28	81–0162	Fuel Tank Ass'y	1
29	55–3575	Cap – Fuel	1

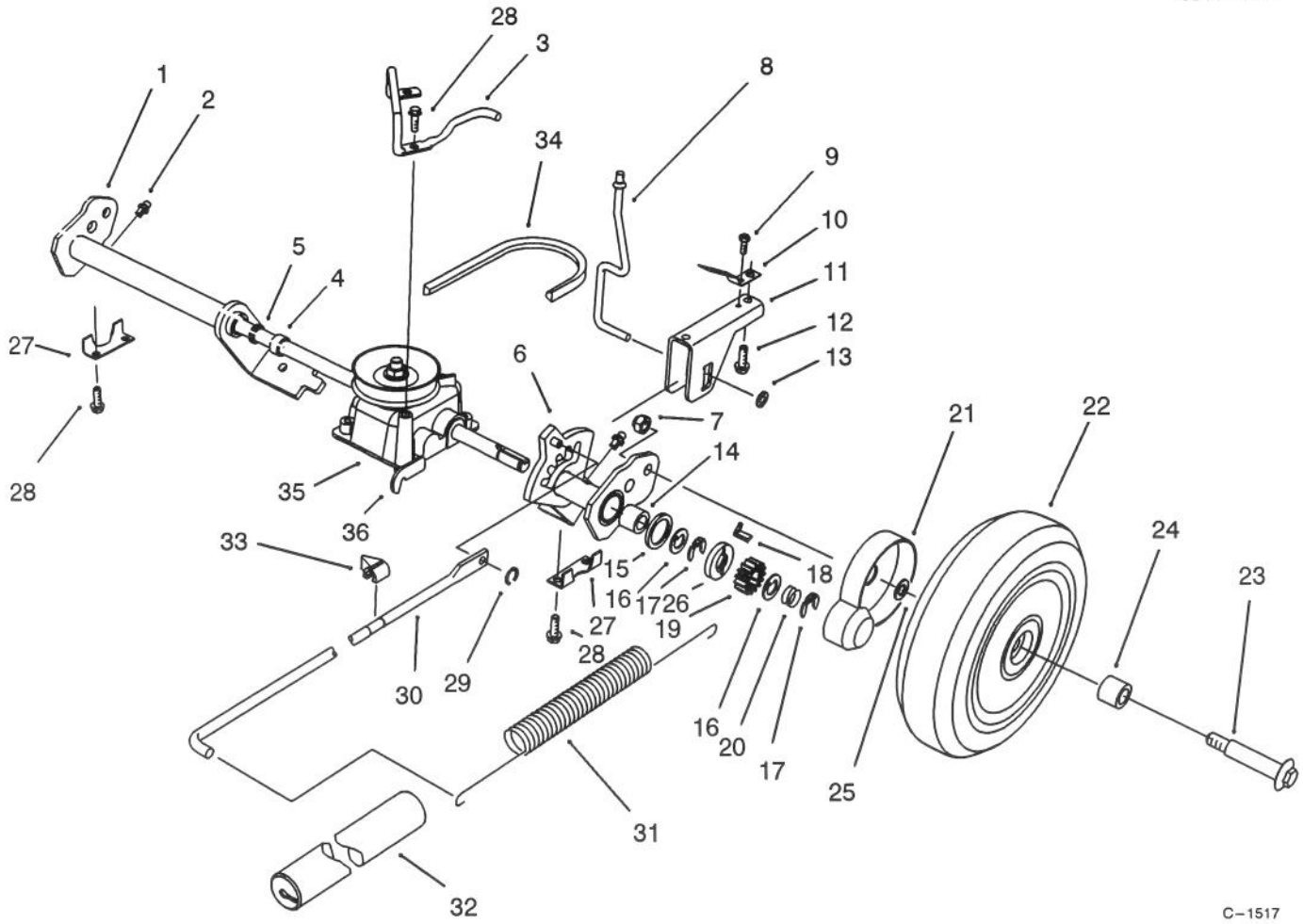

S. P. REAR AXLE ASSEMBLY

Ref. No.	Part No.	Description	No. Used
1	71–9820	Rear Pivot Assembly R.H. (Incl. Ref. #2, 4, 5 & 14)	1
2	302–26	Fitting – Grease	2
3	71–9850	Retainer – Belt	1
4	47–2890	Bushing – Sleeve	2
5	47–6730	Seal – Grease	2
6	71–9810	Rear Pivot Assembly L.H. (Incl. Ref. #2, 4, 5 & 14)	1
7	3296–5	Nut – Lock	2
8	71–7840	Rod – Trigger	1
9	32144–31	Screw – Thread Forming	1
10	71–8060	Spring – Trigger Return	2
11	71–8080	Saddle – H.O.C.	1
12	63–8590	Screw – Thread Forming	2
13	32112–13	Nut – Push	1
14	48–2060	Bearing – Needle	2
15	65–4710	Washer – Friction	2
16	65–4740	Washer – Keyed Thrust	4
17	65–2720	Ring – Retaining	4
18	66–6050	Key – Rocking L.H.	1
*	66–6040	Key – Rocking R.H.	1

Ref. No.	Part No.	Description	No. Used
19	65–4750	Gear – Pinion	2
20	65–4720	Spring – Compression	2
21	74–1660	Cover – Wheel	2
22	14–9959	Wheel, Tire & Gear Assy. (Incl. Ref. #24)	2
23	27–6230	Bolt – Wheel	2
24	27–6250	Bushing – Wheel	4
25	74–1670	Spacer – Wheel	2
26	65–4760	Washer – Clutch	2
27	71–7770	Plate – Rear Securing	2
28	32144–4	Screw – Thread Forming	6
29	32151–93	Ring – Grip	1
30	71–7970	Rod – Link	1
31	71–7740	Spring – Counterbalance	1
32	71–8450	Cover – Spring	1
33	71–7980	Indicator – H.O.C.	1
34	71–9450	V–Belt	1
35	71–9600	Gear Case Assembly (Incl. Ref. #36)	1
36	71–9630	Bracket – Traction	1

*Not Illustrated

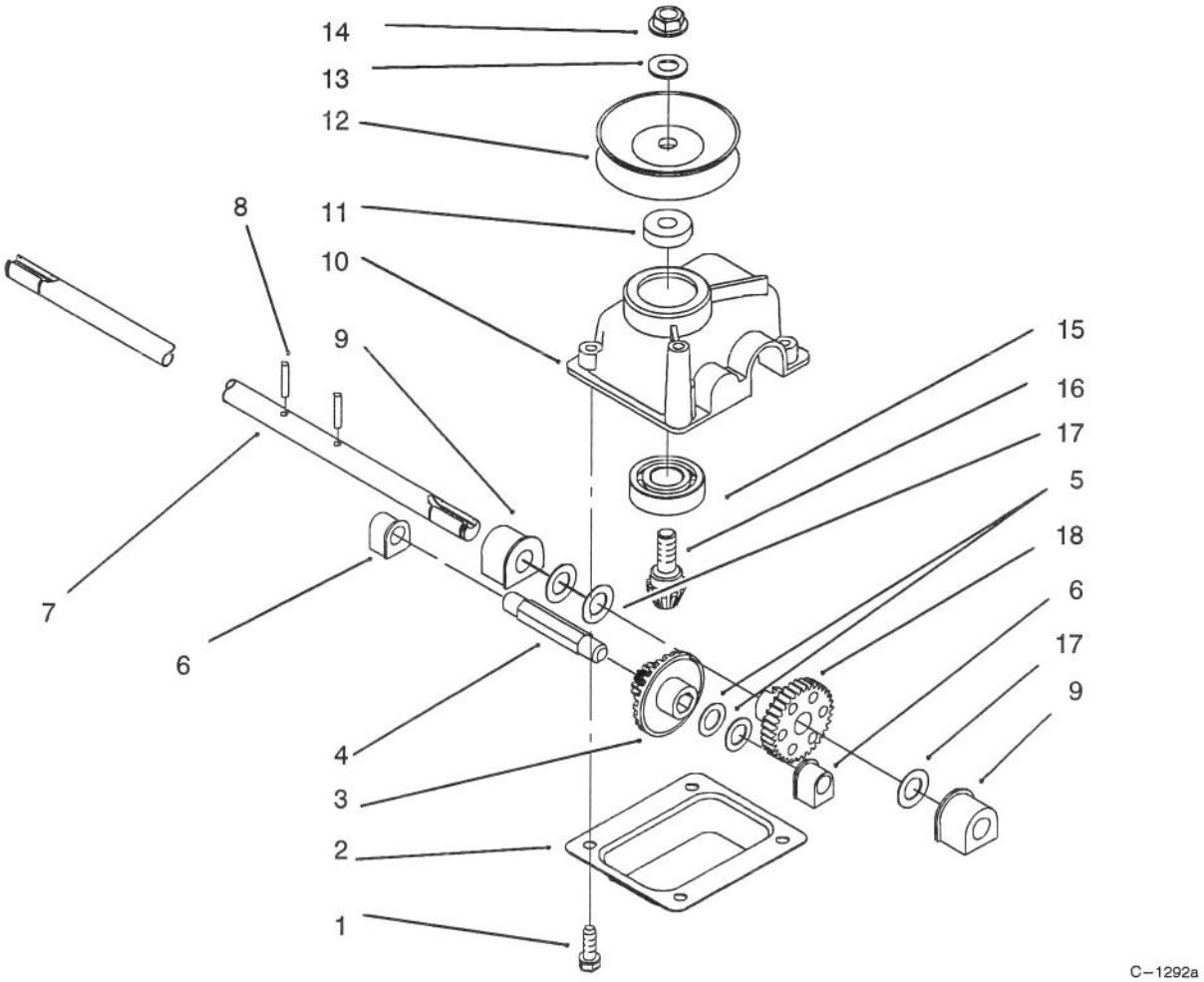

GEAR CASE ASSEMBLY

Ref. No.	Part No.	Description	No. Used
1	49–2040	Screw – Taptite	4
2	614668	Cover – Gear Case	1
3	55–3760	Pinion – 15 Tooth	1
4	614696	Shaft – Intermediate	1
5	36–4791	Washer	2
6	60–8750	Bushing	2
7	71–9620	Shaft – Output	1
8	32121–114	Pin – Spirol	2
9	60–8850	Bushing – Output	2
10	614578	Gearcase	1

Ref. No.	Part No.	Description	No. Used
11	62–6660	Spacer	1
12	71–9610	Pulley – Half	2
13	3256–24	Washer	1
14	3296–5	Nut	1
15	38–7820	Bearing – Ball	1
16	60–8890	Gear – Bevel Pinion	1
17	36–4780	Washer – Thrust	3
18	614596	Gear 34 Tooth	1
*	71–9600	Gear Case Ass'y Complete	1

*Not Illustrated

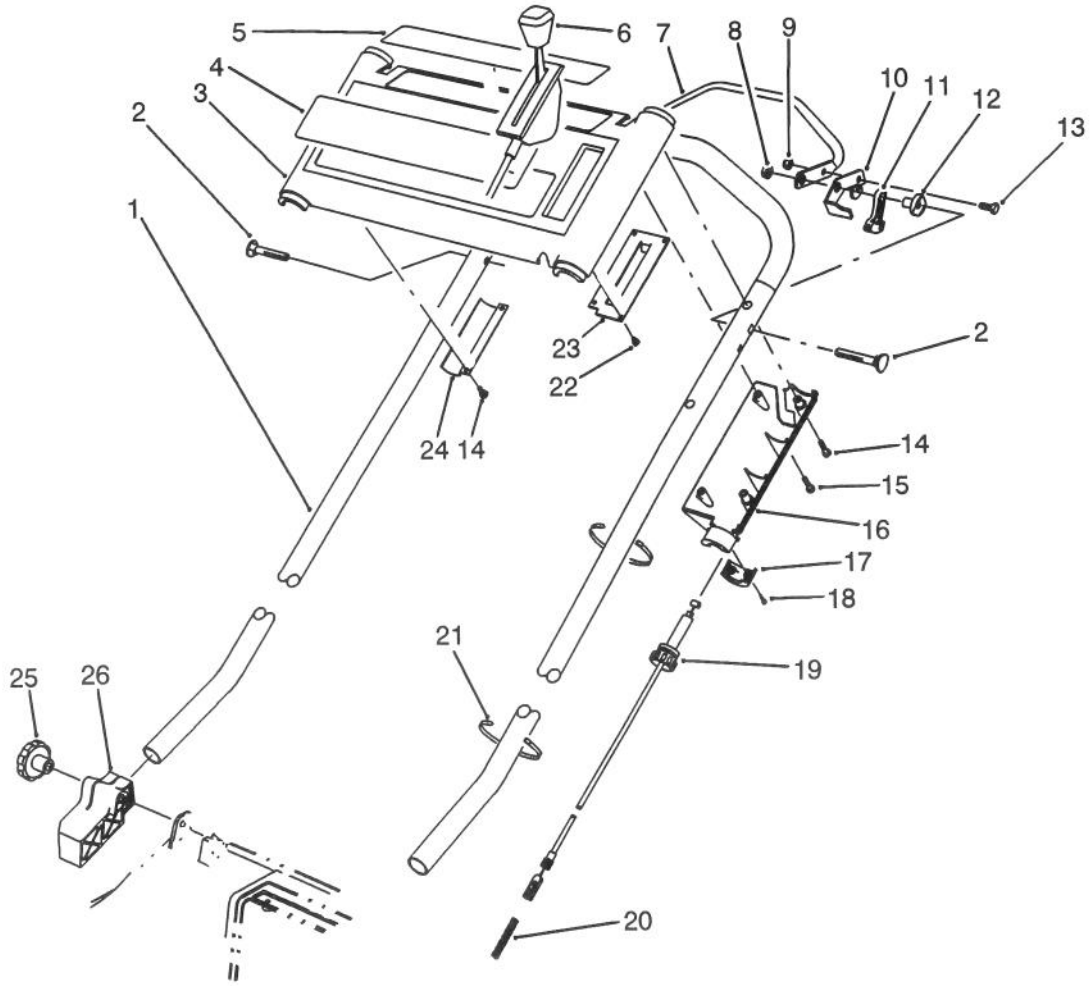

C–0367

S. P. HANDLE ASSEMBLY

Ref. No.	Part No.	Description	No. Used
1	71–9020	Handle	1
2	17–9426	Screw – Handle	2
3	16–1699	Panel – Control (Incl. Ref. #4 & 5)	1
4	71–9862	Decal – TORO 2 Cyc	1
5	71–9865	Decal – Danger	1
6	66–0233	Control – Throttle Bend Type #1 Sheath Lg. 42.00 Wire Lg. 2.50	1
7	46–9900	Bar – Control	1
8	3296–29	Nut – Flange Lock	2
9	3296–42	Nut – Lock	1
10	46–8800	Lever – Control	1
11	46–5520	Lever – Traction	1
12	66–0330	Support – Spacer	2

Ref. No.	Part No.	Description	No. Used
13	321–3	Screw – Cap Hex. Hd.	1
14	32144–97	Screw – Thread Forming	5
15	32104–121	Screw – Thread Forming	1
16	71–7680	Cover – Throttle Lower	1
17	71–7630	Cap – Throttle Lower	1
18	32144–99	Screw – Thread Forming	2
19	71–8110	Cable – Traction	1
20	71–8310	Spring – Compression	1
21	3290–378	Tie – Cable	2
22	32144–98	Screw – Thread Forming	4
23	71–8040	Plate – Throttle	1
24	71–8130	Bracket – Panel	1
25	19–4050	Knob – Handle	2
26	71–8090	Mount – Handle L.H.	1
*	71–8100	Mount – Handle R.H.	1

*Not Illustrated

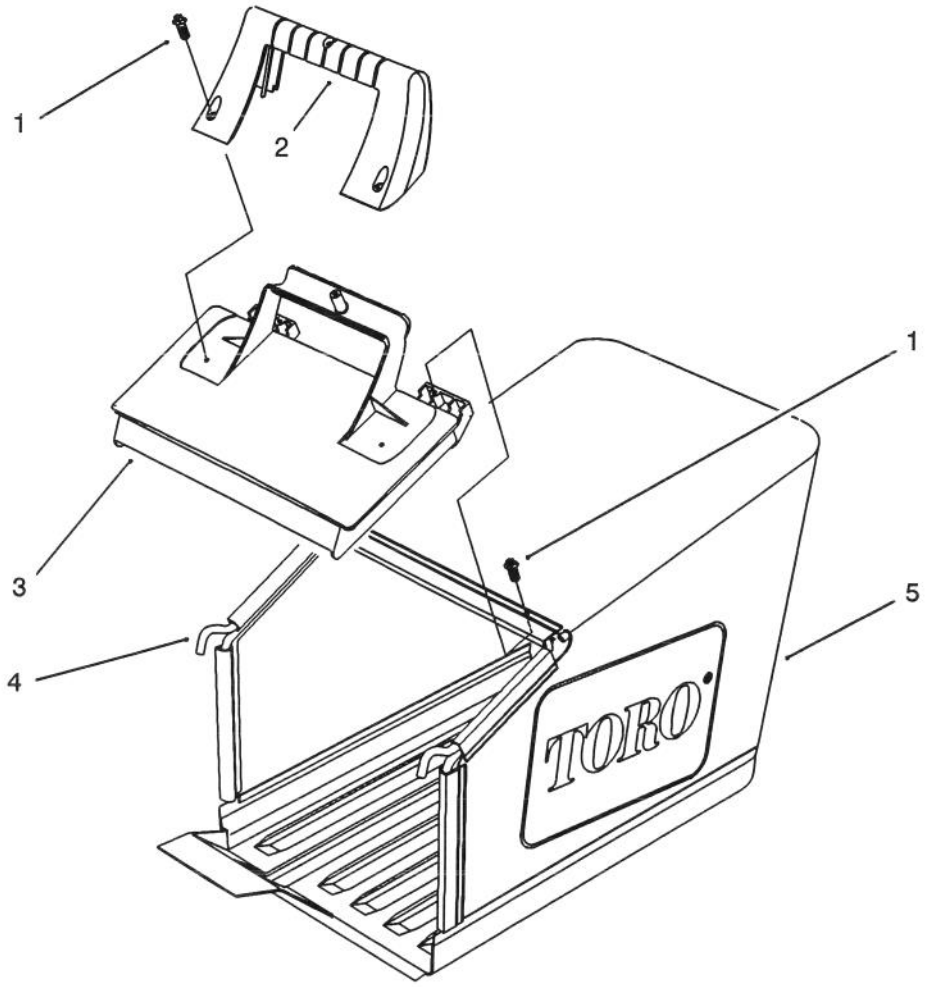

C–1509

GRASS BAG ASSEMBLY

Ref. No.	Part No.	Description	No. Used
1	32144–111	Screw – Hex Washer Hd. Thr'd Form	5
2	71–9480	Handle – Door	1

Ref. No.	Part No.	Description	No. Used
3	71–9470	Door – Bag	1
4	71–9900	Frame – Bag	1
5	71–9460	Bag – Grass	1

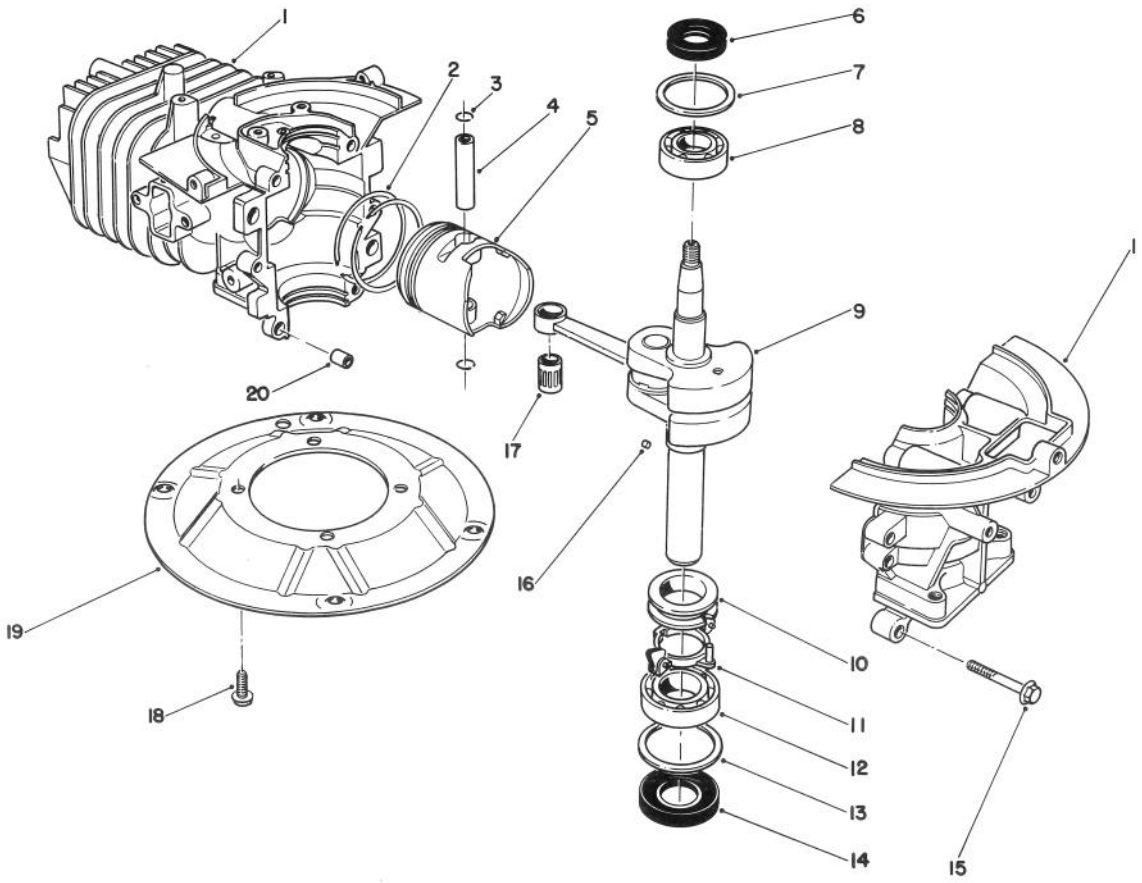

CRANK SHAFT ASSEMBLY
(Model No. 47PN2–6)

Ref. No.	Part No.	Description	No. Used
1	81–2800	Crankcase/Cylinder Ass'y	1
2	81–0590	Ring Set	1
3	81–0620	Circlip	2
4	81–0600	Pin – Wrist	1
5	81–0580	Piston (58mm)	1
6	81–0720	Oil Seal – Upper	1
7	81–0710	Thrust Washer – Upper	1
8	81–0690	Bearing – Upper (20mm)	1
9	81–4600	Crankshaft/Connecting Rod Assembly	1
10	81–0770	Collar – Governor	1

Ref. No.	Part No.	Description	No. Used
11	81–0750	Bracket – Governor Arm	1
12	81–0700	Bearing – Lower (25mm)	1
13	81–0730	Thrust Washer – Lower	1
14	81–0740	Oil Seal – Lower	1
15	81–0540	Bolt (30mm Lg.)	6
16	81–0760	Pin – Crankshaft	1
17	81–0610	Bearing – Wrist Pin	1
18	81–0570	Bolt (20mm Lg.)	4
19	81–0560	Plate – Mounting	1
20	81–0520	Pin – Crankcase	2
*	12–7699	Short Block Assembly	1

*Not Illustrated

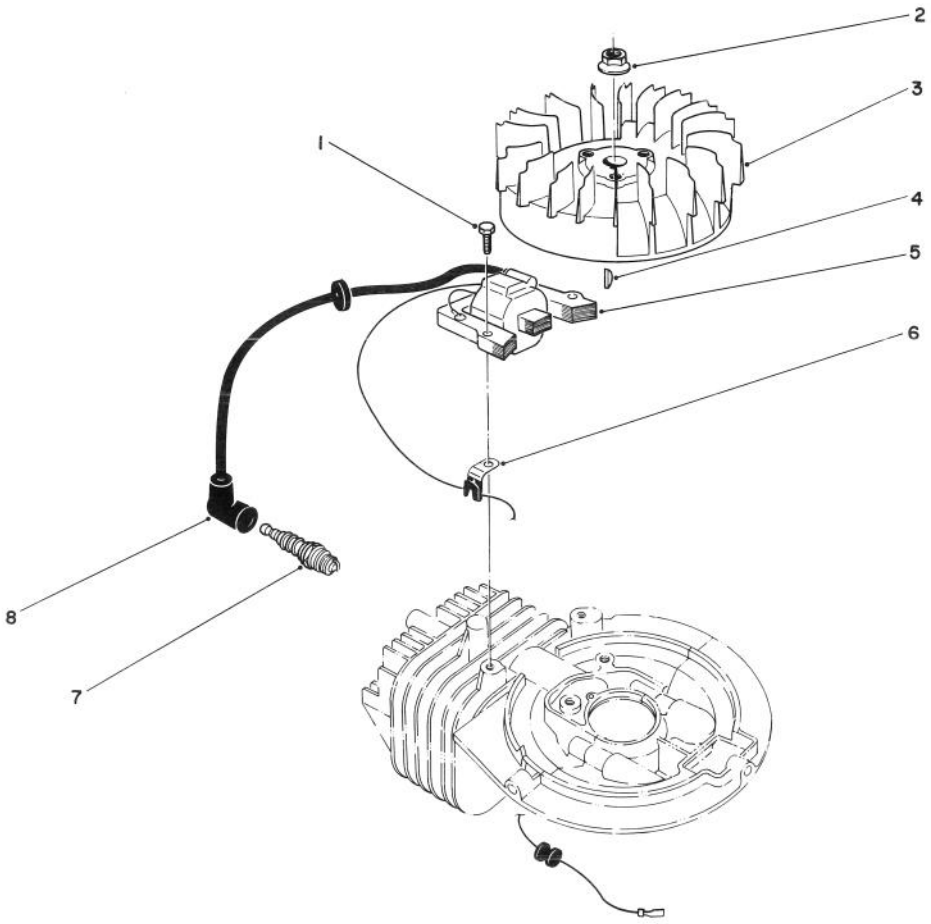

C–0176

IGNITION ASSEMBLY (Model No. 47PN2–6)

Ref. No.	Part No.	Description	No. Used
1	81–5680	Capscrew – Hex Hd.	1
2	81–1330	Nut	1
3	81–2810	Flywheel – Magneto	1
4	81–2370	Key – Flywheel	1
5	81–2820	Coil/Ignition Assembly	1
6	81–1480	Clamp	1
7	50–1170	Spark Plug	1
8	81–1500	Cover – Spark Plug	1
*	41–7650	Puller – Flywheel	1

*Not Illustrated

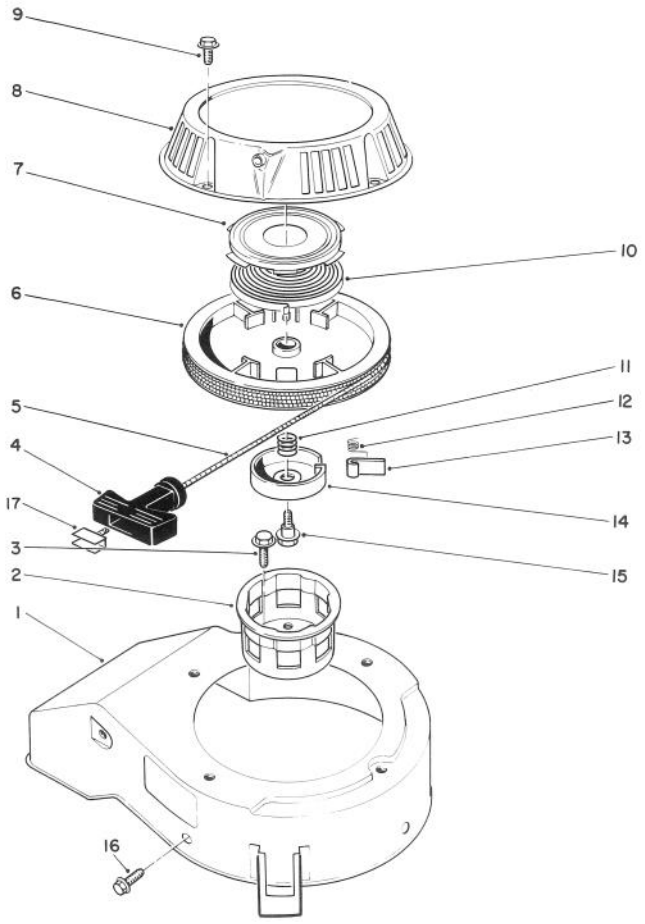

T–0668

RECOIL ASSEMBLY
(Model No. 47PN2–6)

Ref. No.	Part No.	Description	No. Used
1	81–2070	Cover – Cooling Fan	1
2	81–1290	Pulley – Starter Cup	1
3	81–1300	Bolt (16mm Lg.)	3
4	81–1630	Handle – Recoil	1
5	81–1270	Rope	1
6	81–1210	Reel – Rope Pulley	1
7		Retainer Cup – Recoil Spring	1
8	81–2090	Case – Recoil	1
9	81–1280	Bolt	4
10		Spring – Recoil	1
11	81–1240	Spring – Compression	1

Ref. No.	Part No.	Description	No. Used
12	81–1220	Spring – Dog	1
13	81–1230	Dog	1
14	81–1250	Retainer – Dog	1
15	81–1260	Bolt – Shoulder	1
16	53–1340	Bolt – Self Tapping	3
17	81–5760	Insert – Recoil Handle	1
*	81–2300	Spring & Retainer (Incl. Ref. #7 & 10)	1
*	81–5480	Starter Assembly (Incl. Ref. #4–8, & 10–15)	1

*Not Illustrated

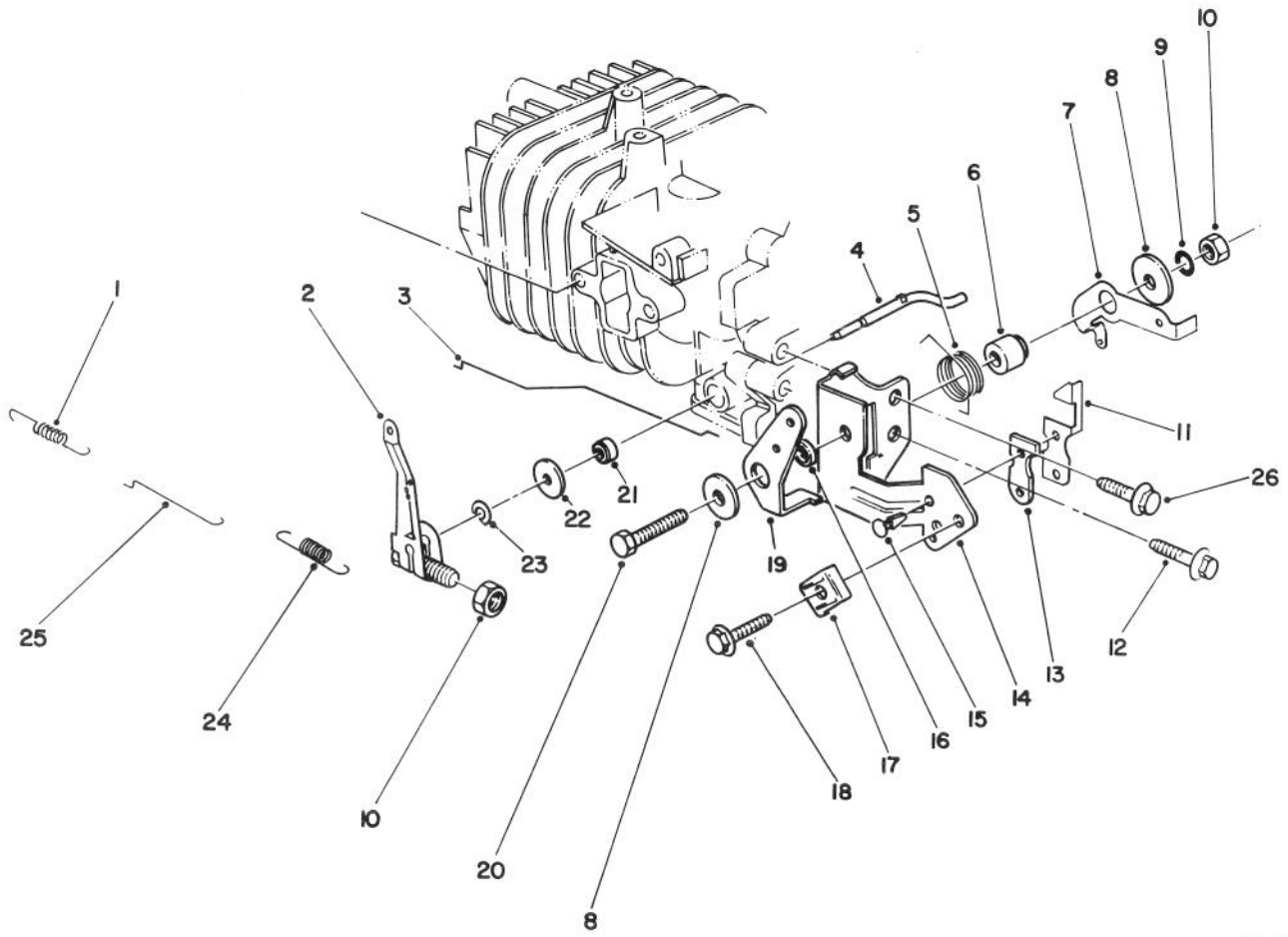

GOVERNOR ASSEMBLY (Model No. 47PN2–6)

Ref. No.	Part No.	Description	No. Used
1	81–0920	Spring – Carburetor Rod	1
2	81–5420	Governor Arm/Bolt Ass'y	1
3	81–5410	Rod – Choke	1
4	81–0840	Shaft – Governor	1
5	81–2460	Spring – Choke Control Lever	1
6	81–1770	Spacer – Governor Spring Lever	1
7	81–2850	Lever – Governor Spring	1
8	81–1750	Washer – Choke Control Lever	2
9	81–1450	Washer – Lock	1
10	81–0900	Nut	2
11	81–1840	Terminal – Kill Switch	1
12	81–0540	Bolt – Self Tapping	1

Ref. No.	Part No.	Description	No. Used
13	81–1830	Insulator – Kill Switch	1
14	81–2420	Bracket – Throttle Control	1
15	81–4530	Rivet – Kill Switch	2
16	81–2470	Spacer – Choke Control Lever	1
17	81–2430	Clamp – Cable	1
18	50–0130	Bolt – Cable Clamp	1
19	81–1710	Lever – Choke Control	1
20	81–1730	Bolt – Throttle Control Brkt.	1
21	81–0850	Oil Seal – Governor Shaft	1
22	81–0860	Washer	1
23	81–0870	E–Ring	1
24	81–2830	Spring – Governor	1
25	81–0910	Rod – Carburetor	1
26	81–1170	Bolt – Self Tapping	1

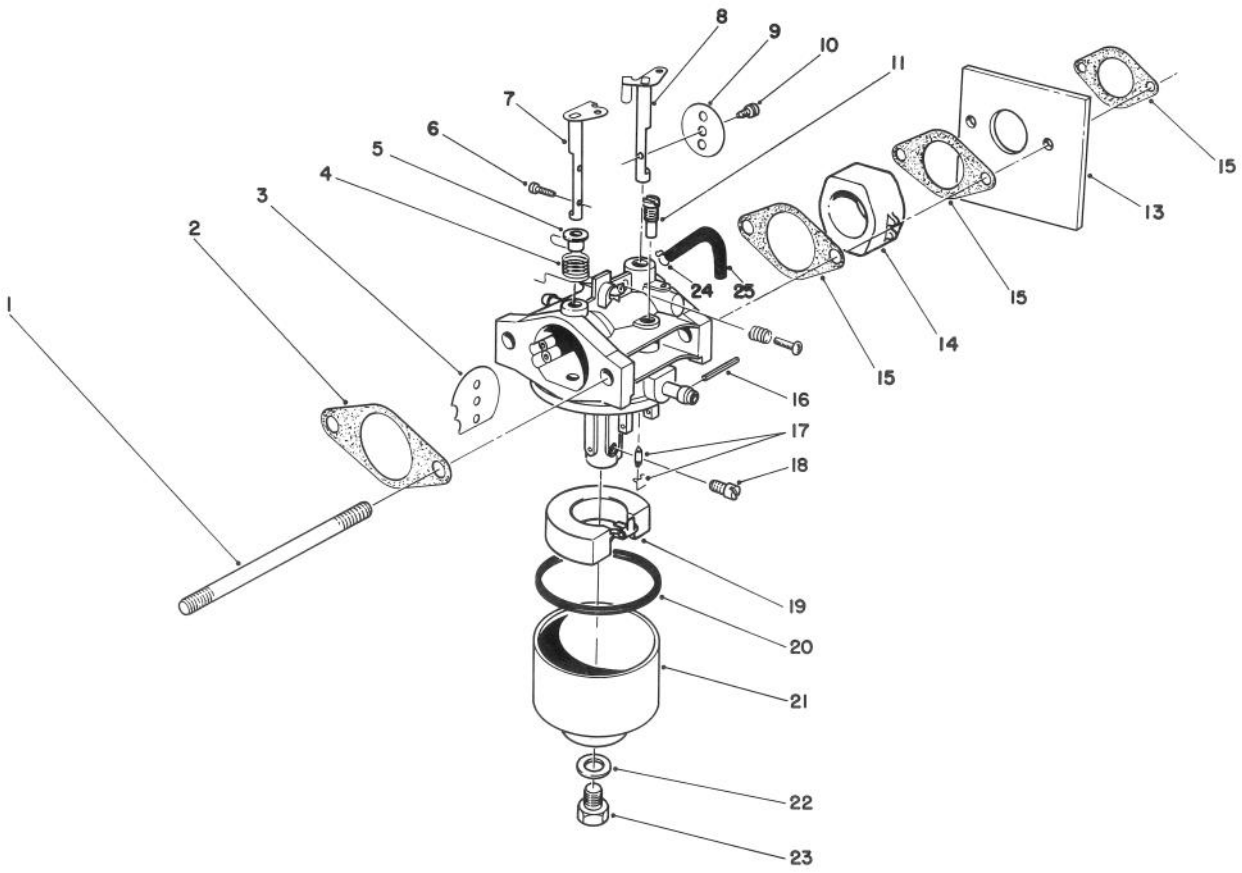

C–0191

CARBURETOR ASSEMBLY (Model No. 47PN2–6)

Ref. No.	Part No.	Description	No. Used
1	81–5450	Stud Bolt – Carburetor	2
2	81–0090	Gasket	2
3	81–0240	Valve – Choke	1
4	81–0230	Spring – Choke	1
5	81–0220	Bushing – Choke Valve	1
6	81–2160	Screw	2
7	81–1950	Shaft – Choke	1
8	81–0250	Shaft – Throttle	1
9	81–0260	Valve – Throttle	1
10	81–0270	Screw – Throttle Valve	1
11	81–1030	Jet – Pilot (#40)	1
13	81–5490	Shield – Carburetor	1
14	81–5440	Insulator – Carburetor	1
15	81–0780	Gasket	3
16	81–5600	Pin	1
17	81–4910	Needle Valve/Spring Wire	1

Ref. No.	Part No.	Description	No. Used
18	81–1060	Jet – Main (#75)	1
*	81–2340	Jet – Main (#72.5) High Alt., Above 6000 (Optional)	1
19	81–0970	Float	1
20	81–1010	Gasket – Float Bowl	1
21	81–5660	Bowl – Float	1
22	81–1020	Gasket – Bowl Screw	1
23	81–5670	Screw – Bowl	1
24	81–5460	Clamp – Vent Tube	1
25	81–5470	Tube – Vent	1
*	12–6379	Carburetor Kit (Incl. Ref. #2, 15, 17, 20, & 22)	1
*	81–5740	Carburetor Ass'y Complete	1
*	81–5810	Needle Valve Seat Kit	1

*Not Illustrated

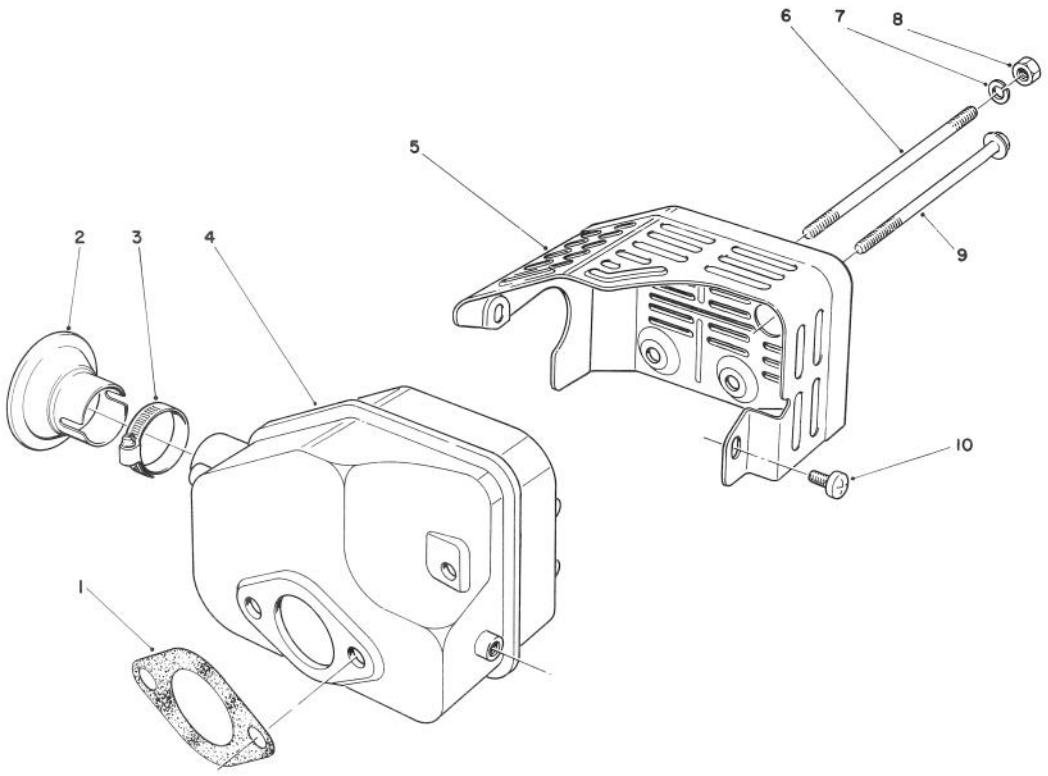

T–0667

MUFFLER ASSEMBLY (Model No. 47PN2–6)

Ref. No.	Part No.	Description	No. Used
1	81–1080	Gasket – Muffler	1
*2	81–0200	Spark Arrester	1
†3		Clamp	1
4	81–5690	Muffler	1
5	81–2450	Cover – Muffler	1

Ref. No.	Part No.	Description	No. Used
6	81–1100	Bolt	2
7	81–1120	Washer – Lock	2
8	81–1110	Nut	2
9	81–1150	Bolt – Self Tapping	1
10	81–1140	Screw – Phillips Hd.	2

*Optional Equipment
†Obtain Locally

TORO PART NUMBER INDEX

Part No.	Description	Pg. No.	Ref. No.	Qty.
	Decal – Noise Rating	1	9	1
	Decal – Power Rating	1	31	1
614578	Gearcase	4	10	1
614596	Gear 34 Tooth	4	18	1
614668	Cover – Gear Case	4	2	1
614696	Shaft – Intermediate	4	4	1
12–6379	Carburetor Kit	11	*	1
12–7699	Short Block Assembly	7	*	1
14–9959	Wheel, Tire & Gear Assy.	3	22	2
16–1669	Housing – 48cm	1	2	1
16–1699	Panel – Control	5	3	1
17–9426	Screw – Handle	5	2	2
19–4050	Knob – Handle	5	25	2
26–0672	Bolt – Blade	2	25	2
27–6230	Bolt – Wheel	3	23	2
27–6250	Bushing – Wheel	3	24	4
27–6250	Bushing – Wheel	1	28	4
36–4780	Washer – Thrust	4	17	3
36–4791	Washer	4	5	2
38–7820	Bearing – Ball	4	15	1
40–1940	Washer – Wheel	1	27	2
41–7650	Puller – Flywheel	8	*	1
44–2750	Body – Primer	2	15	1
44–3172	Hose – Primer	2	7	1
46–1113	Wheel & Tire Assembly	1	29	2
46–5520	Lever – Traction	5	11	1
46–8290	Plate – TORO Logo	2	2	1
46–8800	Lever – Control	5	10	1
46–9900	Bar – Control	5	7	1
47–2890	Bushing – Sleeve	3	4	2
47–6730	Seal – Grease	3	5	2
48–2060	Bearing – Needle	3	14	2
49–2040	Screw – Taptite	4	1	4
50–0130	Bolt – Cable Clamp	10	18	1
50–1170	Spark Plug	8	7	1
50–7180	Nut – Lock	2	12	2
51–2690	Screw – Hex. Flange Hd.	2	9	1
51–3215	Line – Fuel	2	5	1
51–3216	Line – Fuel	2	18	1
53–1340	Bolt – Self Tapping	9	16	3
55–3575	Cap – Fuel	2	29	1
55–3760	Pinion – 15 Tooth	4	3	1
57–3110	Decal – Recoil	2	3	1
60–8750	Bushing	4	6	2
60–8850	Bushing – Output	4	9	2
60–8890	Gear – Bevel Pinion	4	16	1
62–3860	Decal – Danger	1	4	1
62–3980	Spacer	2	13	2
62–6660	Spacer	4	11	1
62–7550	Pulley – Driver	2	27	1
63–8590	Screw – Thread Forming	3	12	2
63–9330	Body – Air Cleaner	2	14	1
63–9340	Cover – Air Cleaner	2	11	1
63–9380	Element – Air Cleaner	2	10	1
65–2720	Ring – Retaining	3	17	4
65–4710	Washer – Friction	3	15	2
65–4720	Spring – Compression	3	20	2
65–4740	Washer – Keyed Thrust	3	16	4
65–4750	Gear – Pinion	3	19	2
65–4760	Washer – Clutch	3	26	2
65–5210	Screw – Thread Forming	1	12	2
66–0233	Control – Throttle	5	6	1
66–0330	Support – Spacer	5	12	2
66–0680	Decal – French Regulation	1	19	1
66–6040	Key – Rocking R.H.	3	*	1
66–6050	Key – Rocking L.H.	3	18	1
66–7460	Bulb – Primer	2	16	1
71–7630	Cap – Throttle Lower	5	17	1
71–7680	Cover – Throttle Lower	5	16	1
71–7740	Spring – Counterbalance	3	31	1
71–7770	Plate – Rear Securing	3	27	2
71–7820	Pivot – Front	1	25	1
71–7840	Rod – Trigger	3	8	1
71–7860	Grip – Upper	1	13	1
71–7870	Grip – Lower	1	6	1
71–7890	Guide – Belt Rear	1	21	1
71–7900	Cap – Hinge Bolt L.H.	1	16	1
71–7910	Cap – Hinge Bolt R.H.	1	11	1
71–7920	Cover – Belt	1	3	1
71–7930	Trigger – H.O.C.	1	7	1
71–7940	Retainer – Blade	2	21	1
71–7960	Guide – Belt Engine	2	26	1
71–7970	Rod – Link	3	30	1
71–7980	Indicator – H.O.C.	3	33	1
71–7990	Ramp – Discharge	1	22	1
71–8040	Plate – Throttle	5	23	1
71–8060	Spring – Trigger Return	3	10	2
71–8080	Saddle – H.O.C.	3	11	1
71–8090	Mount – Handle L.H.	5	26	1
71–8100	Mount – Handle R.H.	5	*	1
71–8110	Cable – Traction	5	19	1
71–8130	Bracket – Panel	5	24	1
71–8210	Blade – 48cm	2	22	1
71–8310	Spring – Compression	5	20	1
71–8450	Cover – Spring	3	32	1
71–8580	Spacer – Door	1	20	2
71–8830	Retainer – Shaft	1	24	2
71–9020	Handle	5	1	1
71–9280	Filter – Fuel	2	17	1
71–9450	V–Belt	3	34	1
71–9460	Bag – Grass	6	5	1
71–9470	Door – Bag	6	3	1
71–9480	Handle – Door	6	2	1
71–9600	Gear Case Ass'y Complete	4	*	1
71–9600	Gear Case Assembly	3	35	1
71–9610	Pulley – Half	4	12	2
71–9620	Shaft – Output	4	7	1
71–9630	Bracket – Traction	3	36	1
71–9800	Door – Discharge	1	15	1
71–9810	Rear Pivot Assembly L.H.	3	6	1
71–9820	Rear Pivot Assembly R.H.	3	1	1
71–9840	Spring – Door	1	18	2
71–9850	Retainer – Belt	3	3	1
71–9860	Decal – 48cm	1	1	1
71–9862	Decal – TORO 2 Cyc	5	4	1
71–9865	Decal – Danger	5	5	1
71–9900	Frame – Bag	6	4	1
74–1660	Cover – Wheel	3	21	2
74–1670	Spacer – Wheel	3	25	2
77–2800	Engine – 2 Cycle	2	1	1
80–2770	Cup – Anti–Scalp	2	23	1
81–0090	Gasket	11	2	2
81–0090	Gasket – Air Cleaner	2	4	1
81–0162	Fuel Tank Ass'y	2	28	1
81–0200	Spark Arrester	12	*2	1
81–0220	Bushing – Choke Valve	11	5	1
81–0230	Spring – Choke	11	4	1
81–0240	Valve – Choke	11	3	1
81–0250	Shaft – Throttle	11	8	1
81–0260	Valve – Throttle	11	9	1
81–0270	Screw – Throttle Valve	11	10	1
81–0520	Pin – Crankcase	7	20	2
81–0540	Bolt (30mm Lg.)	7	15	6
81–0540	Bolt – Self Tapping	10	12	1
81–0560	Plate – Mounting	7	19	1
81–0570	Bolt (20mm Lg.)	7	18	4
81–0580	Piston (58mm)	7	5	1
81–0590	Ring Set	7	2	1
81–0600	Pin – Wrist	7	4	1
81–0610	Bearing – Wrist Pin	7	17	1
81–0620	Circlip	7	3	2
81–0690	Bearing – Upper (20mm)	7	8	1
81–0700	Bearing – Lower (25mm)	7	12	1
81–0710	Thrust Washer – Upper	7	7	1

*Not Illustrated

TORO PART NUMBER INDEX (Cont.)

Part No.	Description	Pg. No.	Ref. No.	Qty.
81–0720	Oil Seal – Upper	7	6	1
81–0730	Thrust Washer – Lower	7	13	1
81–0740	Oil Seal – Lower	7	14	1
81–0750	Bracket – Governor Arm	7	11	1
81–0760	Pin – Crankshaft	7	16	1
81–0770	Collar – Governor	7	10	1
81–0780	Gasket	11	15	3
81–0840	Shaft – Governor	10	4	1
81–0850	Oil Seal – Governor Shaft	10	21	1
81–0860	Washer	10	22	1
81–0870	E–Ring	10	23	1
81–0900	Nut	10	10	2
81–0910	Rod – Carburetor	10	25	1
81–0920	Spring – Carburetor Rod	10	1	1
81–0970	Float	11	19	1
81–1010	Gasket – Float Bowl	11	20	1
81–1020	Gasket – Bowl Screw	11	22	1
81–1030	Jet – Pilot (#40)	11	11	1
81–1060	Jet – Main (#75)	11	18	1
81–1080	Gasket – Muffler	12	1	1
81–1100	Bolt	12	6	2
81–1110	Nut	12	8	2
81–1120	Washer – Lock	12	7	2
81–1140	Screw – Phillips Hd.	12	10	2
81–1150	Bolt – Self Tapping	12	9	1
81–1170	Bolt – Self Tapping	10	26	1
81–1210	Reel – Rope Pulley	9	6	1
81–1220	Spring – Dog	9	12	1
81–1230	Dog	9	13	1
81–1240	Spring – Compression	9	11	1
81–1250	Retainer – Dog	9	14	1
81–1260	Bolt – Shoulder	9	15	1
81–1270	Rope	9	5	1
81–1280	Bolt	9	9	4
81–1290	Pulley – Starter Cup	9	2	1
81–1300	Bolt (16mm Lg.)	9	3	3
81–1330	Nut	8	2	1
81–1450	Washer – Lock	10	9	1
81–1480	Clamp	8	6	1
81–1500	Cover – Spark Plug	8	8	1
81–1630	Handle – Recoil	9	4	1
81–1710	Lever – Choke Control	10	19	1
81–1730	Bolt – Throttle Control Brkt.	10	20	1
81–1750	Washer – Choke Control	10	8	2
81–1770	Spacer – Governor Spring	10	6	1
81–1830	Insulator – Kill Switch	10	13	1
81–1840	Terminal – Kill Switch	10	11	1
81–1950	Shaft – Choke	11	7	1
81–2070	Cover – Cooling Fan	9	1	1
81–2090	Case – Recoil	9	8	1
81–2160	Screw	11	6	2
81–2300	Spring & Retainer	9	*	1
81–2340	Jet – Main (#72.5) High Alt.,	11	*	1
81–2370	Key – Flywheel	8	4	1
81–2420	Bracket – Throttle Control	10	14	1
81–2430	Clamp – Cable	10	17	1
81–2450	Cover – Muffler	12	5	1
81–2460	Spring – Choke Control	10	5	1
81–2470	Spacer – Choke Control	10	16	1
81–2800	Crankcase/Cylinder Ass'y	7	1	1
81–2810	Flywheel – Magneto	8	3	1
81–2820	Coil/Ignition Assembly	8	5	1
81–2830	Spring – Governor	10	24	1
81–2850	Lever – Governor Spring	10	7	1
81–4530	Rivet – Kill Switch	10	15	2
81–4600	Crankshaft/Connecting Rod	7	9	1
81–4910	Needle Valve/Spring Wire	11	17	1
81–5410	Rod – Choke	10	3	1
81–5420	Governor Arm/Bolt Ass'y	10	2	1
81–5440	Insulator – Carburetor	11	14	1
81–5450	Stud Bolt – Carburetor	11	1	2
81–5460	Clamp – Vent Tube	11	24	1
81–5470	Tube – Vent	11	25	1
81–5480	Starter Assembly	9	*	1
81–5490	Shield – Carburetor	11	13	1
81–5600	Pin	11	16	1
81–5660	Bowl – Float	11	21	1
81–5670	Screw – Bowl	11	23	1
81–5680	Capscrew – Hex Hd.	8	1	1
81–5690	Muffler	12	4	1
81–5740	Carburetor Ass'y Complete	11	*	1
81–5760	Insert – Recoil Handle	9	17	1
81–5810	Needle Valve Seat Kit	11	*	1
2412–95	Clamp – Fuel Line	2	6	4
302–26	Fitting – Grease	3	2	2
321–3	Screw – Cap Hex. Hd.	5	13	1
322–29	Screw – Cap Hex. Hd.	1	17	2
3234–24	Bolt – Engine	2	19	3
3253–22	Washer – Lock	2	24	1
3256–16	Washer – Flat	2	8	1
3256–24	Washer	4	13	1
3284–5	Pin – Roll	1	8	1
3290–378	Tie – Cable	5	21	2
3296–5	Nut	4	14	1
3296–5	Nut – Lock	3	7	2
3296–5	Nut – Lock	1	26	2
3296–29	Nut – Flange Lock	5	8	2
3296–42	Nut – Lock	5	9	1
32104–121	Screw – Thread Forming	5	15	1
32112–11	Nut – Push	1	23	1
32112–13	Nut – Push	3	13	1
32121–114	Pin – Spirol	4	8	2
32144–4	Screw – Thread Forming	1	10	10
32144–4	Screw – Thread Forming	2	20	2
32144–4	Screw – Thread Forming	3	28	6
32144–31	Screw – Thread Forming	3	9	1
32144–70	Screw – Hex. Flange Hd.	1	5	1
32144–97	Screw – Thread Forming	1	14	2
32144–97	Screw – Thread Forming	5	14	5
32144–98	Screw – Thread Forming	5	22	4
32144–99	Screw – Thread Forming	5	18	2
32144–111	Screw – Hex Washer Hd.	6	1	5
32151–93	Ring – Grip	3	29	1

*Not Illustrated

PRODUCT CHANGES

In an effort to make improvements available to TORO owners as quickly as possible, minor changes are incorporated into Toro's products from time to time that do not become immediately shown in the Parts Catalog. If such a change has been made in your unit, which is not reflected in your manual, see your TORO Distributor or his Authorized TORO Service Dealer for information and part numbers.

COUNTRIES OTHER THAN THE UNITED STATES OR CANADA

Customers who have purchased TORO products exported from the United States or Canada should contact their Toro Distributor (Dealer) to obtain guarantee policies for your country, province or state. If for any reason you are dissatisfied with your Distributor's service or have difficulty obtaining guarantee information, contact the TORO importer. If all other remedies fail, you may contact us at The Toro Company.

MAINTENANCE RECORD

Date								

Compliance with Radio Interference Regulations Certified.
Certifie Conforme au Reglement sur le Brouillage Radioelectrique.

MAINTENANCE RECORD

Date								