Form Number 3360-757 Rev A

Power Max 828 OXE Snowthrower

Model No. 38637 - 290000001 and up.

Parts Catalog

Ordering Replacement Parts

To order replacement parts, please supply the part number, the quantity, and the description of each part desired.

Understanding Reference Numbers

Each Identified part in an illustration has a reference number. The reference number for a part also appears in the parts list, along with other information about the part.

This catalog uses two special reference number formats, one to indicate parts in a service assembly and another to indicate the quantity of a given part in an illustration.

Service Assembly Reference Numbers

Parts in service assemblies have reference numbers in the form a:b. The a represents the reference number of the entire service assembly and the b represents a sequential number unique to each part within the service assembly.

For example, a wheel assembly might be identified by reference number 6, the tire by 6:1, the valve by 6:2, and the wheel by 6:3. When you order the assembly identified by reference number 6, you receive all parts identified by reference numbers 6:1, 6:2, and 6:3. However, you may also order any part individually. Reference numbers of this type appear in illustrations and in part lists.

Reference Numbers Indicating Quantity

In an illustration, if a reference number indicates more than one part, the reference number has the form nX y. The n represents the quantity of the part, the X is the multiplication symbol, and the y represents the reference number.

For example, in an illustration, the reference number 2X 37 means that two of the parts identified by reference number 37 are indicated.

Register your product at www.Toro.com

© The Toro Company - 2008
All Rights Reserved

Contents

Description	Page
Auger and Housing Assembly	3
28 Inch Auger Gearcase Assembly No. 108-7329	4
Chute Assembly	5
Frame Assembly	6
Handle Assembly	8
Handle and Control Assembly	9
Lever Chute Control Assembly	10
Engine Assembly	11
Wheel Clutch Assembly	12
Wheel Clutch Sprocket Assembly	13
Cylinder Assembly Briggs and Stratton 15D104-0112-E1	14
Cylinder Head Assembly Briggs and Stratton 15D104-0112-E1	15
Crankshaft Assembly Briggs and Stratton 15D104-0112-E1	16
Crankcase Assembly Briggs and Stratton 15D104-0112-E1	17
Carburetor Assembly Briggs and Stratton 15D104-0112-E1	18
Muffler and Fuel Tank Assembly Briggs and Stratton 15D104-0112-E1	19
Governor Assembly Briggs and Stratton 15D104-0112-E1	20
Shroud Assembly Briggs and Stratton 15D104-0112-E1	21
Blower Housing Assembly Briggs and Stratton 15D104-0112-E1	22
Rewind Starter Assembly Briggs and Stratton 15D104-0112-E1	23
Gasket Kit Briggs and Stratton 15D104-0112-E1	24
Carburetor Overhaul Kit Briggs and Stratton 15D104-0112-E1	25
Attachments and Accessories List	26

Part Description Abbreviations

Part descriptions in this catalog may include the following abbreviations.

AR	as required
ASM	assembly
BBC	blade brake clutch
CARR	carriage
DEG	degrees
EXT	external
FH	flat head
GA	gauge
HD	heavy-duty
HF	hex flange
HH	hex head
HHF	hex head flange
HHFTF	hex head flange thread forming
HJ	hex jam
HLH	hex lag head
HOC	height-of-cut
HSBH	hex socket button head
HSFH	hex socket flat head
HSH	hex socket head
HWH	hex washer head
HWHTF	hex washer head thread forming
HYD	hydraulic
LH	left hand
NI	nylon insert
NPTF	national pipe thread fine
PFH	phillips flat head
PPH	phillips pan head
PPHTF	phillips pan head thread forming
PRH	phillips round head
PTH	phillips truss head
PTO	power-take-off
RH	right hand
ROPS	roll-over protection system
SFH	slotted fillister head
SHH	slotted hex head
SHWH	slotted hex washer head
SPH	slotted pan head
SQH	square head
SRH	slotted round head
STD	standard
TAP	self tapping
TTH	torx truss head

Footnotes

❶ Not serviced separately

❷ Obtain from your local Briggs & Stratton dealer

❸ Included in Carburetor Overhaul Kit (Ref. No. 121)

❹ Included in Engine Gasket Set (Ref. No. 358)

❺ Included in Carburetor Gasket Set (Ref. No. 977)

❻ Included in Valve Gasket Set (Ref. No. 1095)

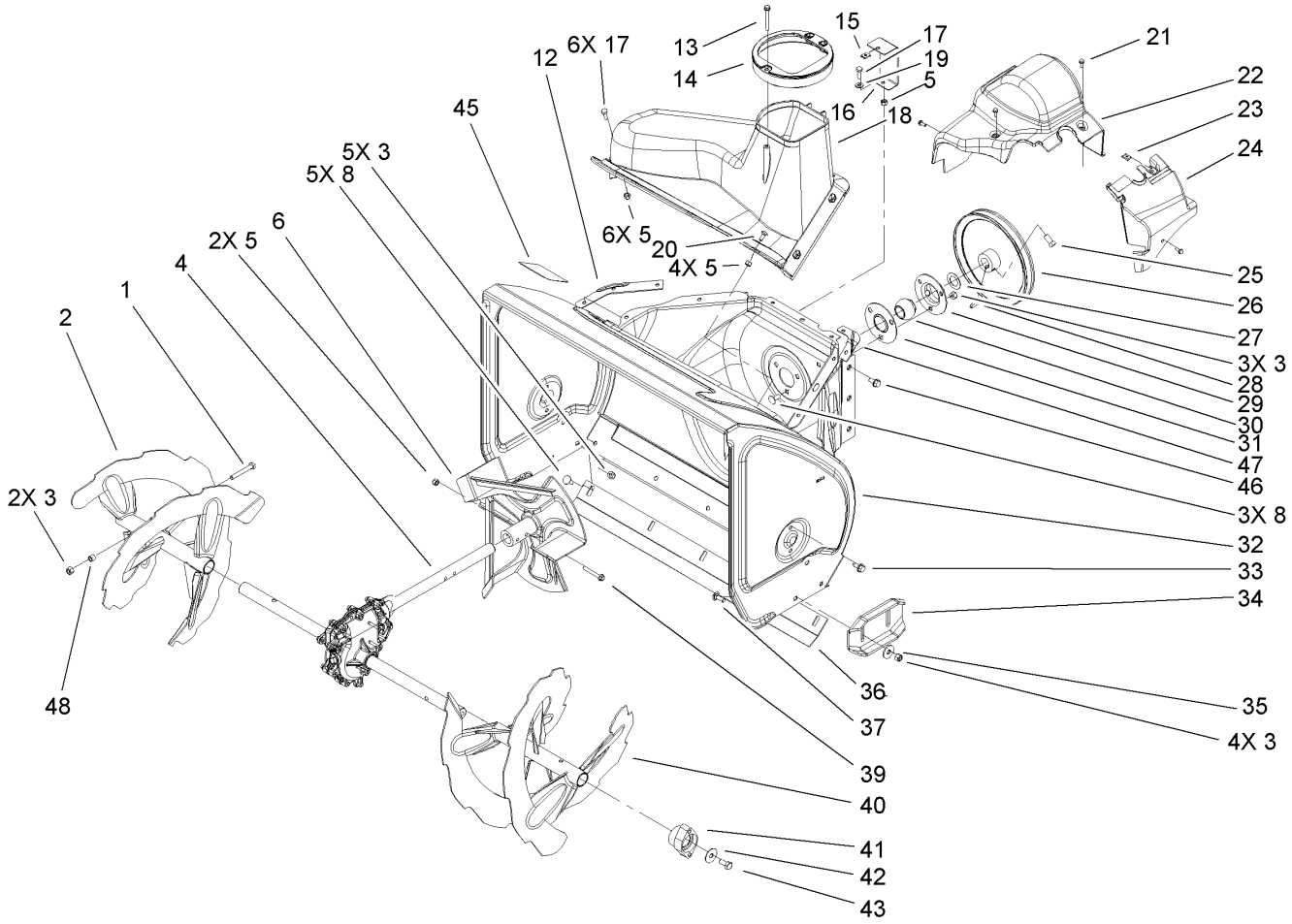

Auger and Housing Assembly

Ref	Part No.	Qty.	Description
1	322-11	2	Screw-HH
2	106-7291-03	1	Auger-RH
3	3296-29	14	Nut-Lock, NI
4	108-7329	1	28 Inch Auger Gearcase ASM
5	3296-42	13	Nut-Lock, NI
6	106-4576-03	1	Impeller ASM
8	3230-23	8	Screw-CARR
12	107-1017-03	1	Seal-Flange, Cover
13	107-3003	1	Screw-Plastite
14	107-3006	1	Guide-Chute
15	107-1013	1	Nut-Speed, U-Type
16	107-1014-03	1	Bracket-Cover, Clip Nut
17	321-4	7	Screw-HH
18	108-0017	1	Cover
19	3256-22	1	Washer-Flat
20	3229-1	4	Screw-CARR
21	32144-112	4	Screw-HWH
22	107-1001	1	Cover-Belt
23	701493	1	Nut-Speed
24	107-1016	1	Cover-Extension, Belt
25	3242-4	2	Screw-Set, SQH
26	62-1300	1	Pulley-Impeller
27	252-80	1	Washer-Thrust
28	3257-23	1	Key-Woodruff

Ref	Part No.	Qty.	Description
29	26-6110	1	Flange-Cup, Bearing
30	63-3450	1	Bearing-Ball
31	26-6120	1	Flange-Cup, Bearing
32	107-3824	1	Housing- Auger, 28 Inch
33	32144-70	4	Screw-HWHTF
34	106-4588-01	2	Skid
35	52-2861	4	Washer
36	106-4573-01	1	Scraper-Fixed
37	3230-16	4	Screw-CARR
39	321-44	2	Screw-HHF
40	106-7301-03	1	LH Auger ASM
41	106-4570	2	Auger-Bearing
42	3-0750	2	Washer
43	323-4	2	Screw-HH
45	107-3040	1	Decal-Danger, Auger
46	32144-14	6	Screw-HWHTF
47	108-0039-03	1	Seal
48	1-633545	2	Spacer

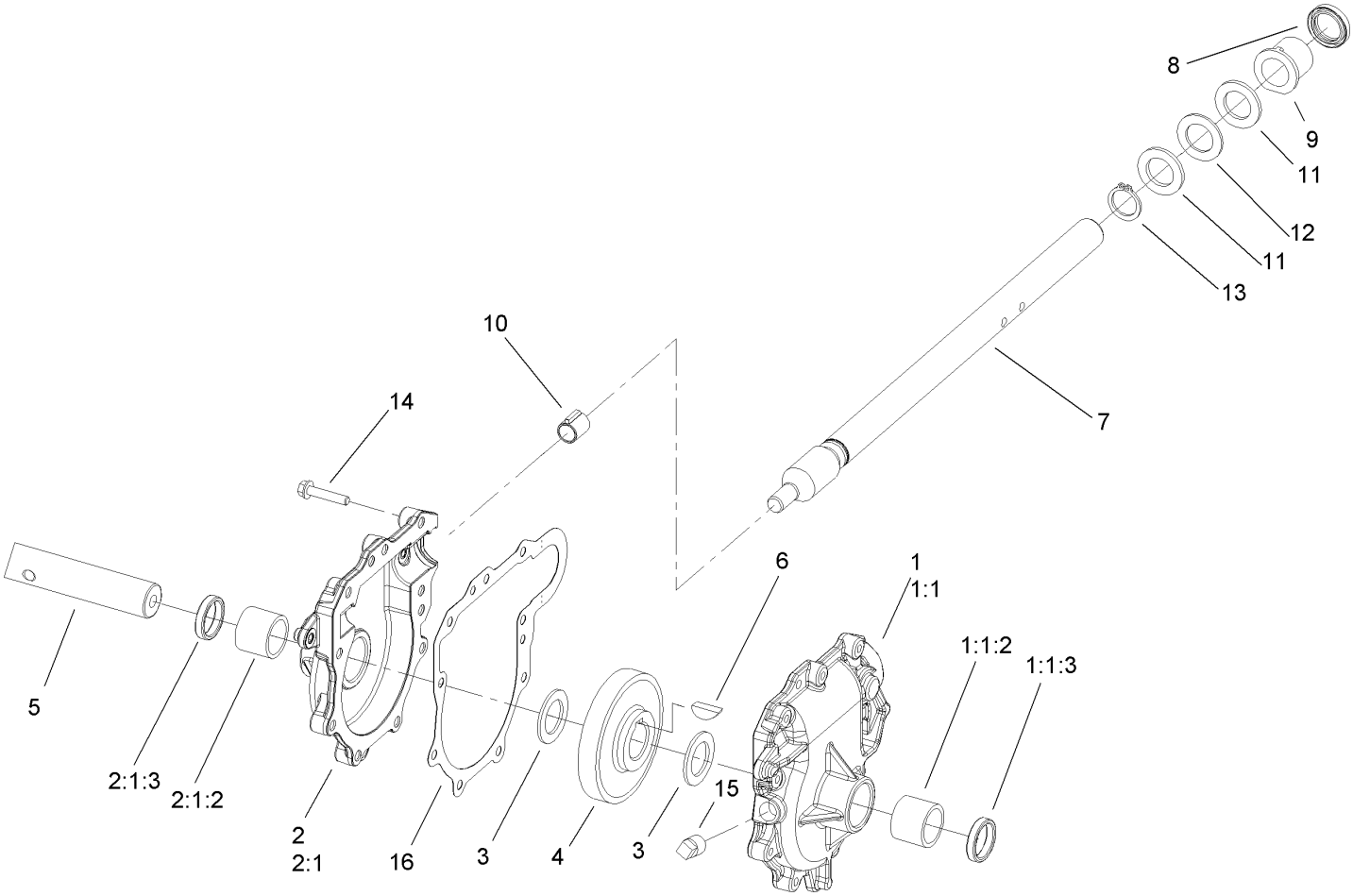

28 Inch Auger Gearcase Assembly No. 108-7329

Ref	Part No.	Qty.	Description
1	108-7325	1	LH Auger Gearcase ASM
❶1:1		1	Gearcase-Auger, LH
1:1:2	112-6635	1	Bushing-Sleeve
1:1:3	7-0045	1	Seal-Oil
2	108-7327	1	RH Auger Gearcase ASM
❶2:1		1	Gearcase-Auger, RH
2:1:2	112-6635	1	Bushing-Sleeve
2:1:3	7-0045	1	Seal-Oil
3	252-71	2	Washer-Thrust
4	62-0120	1	Gear-Helical
5	106-4421	1	Shaft-Auger
6	3257-10	1	Key-Woodruff
7	66-7811	1	Shaft-Impeller
8	253-149	1	Seal-Oil
9	37-6560	1	Bushing-Input
10	62-1150	1	Bushing-Worm
11	252-78	2	Washer-Thrust
12	252-76	1	Bearing-Thrust
13	32151-33	1	Ring-Retaining, EXT
14	108-4862	9	Screw-HWHTF
15	281-1	1	Plug-Pipe, SQH
16	108-7330	1	Gasket-Gearcase, Auger

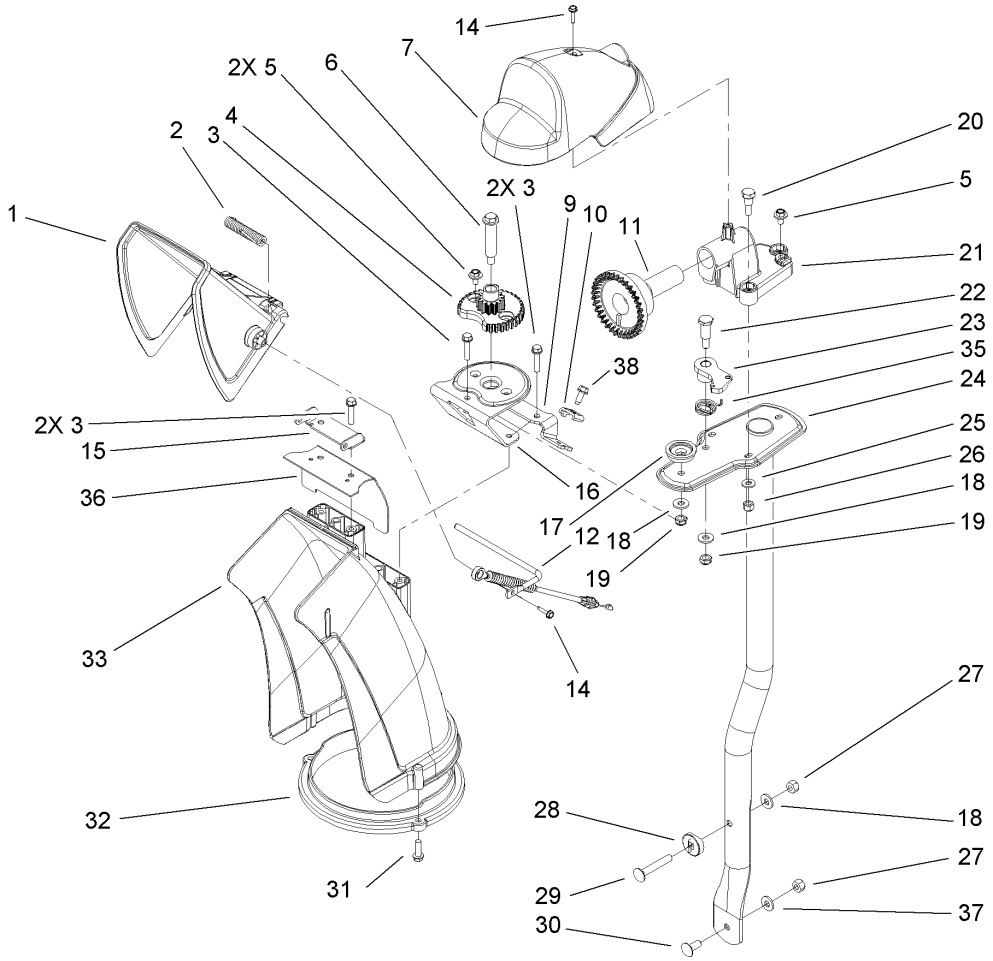

Chute Assembly

Ref	Part No.	Qty.	Description
1	112-6629	1	Deflector-Chute, Ce
2	106-4594	1	Spring-Torsion
3	46-8092	5	Screw-Plastite
4	106-4472	1	Gear-Chute
5	46-6810	3	Screw And Washer ASM
6	100-9880	1	Bolt-Shoulder
7	106-4585	1	Cover-Gear, Chute
9	106-7296	1	Bracket-Cable, Clamp
10	106-7297	1	Clamp-Cable
11	106-4471	1	Gear-Face
12	107-1021	1	Rod-Deflector
14	98-1375	2	Screw-HWH
15	106-7266	1	Bracket-Deflector
16	106-4582-03	1	Bracket-Support, Chute
17	106-4422	1	Spacer-Chute
18	3256-2	3	Washer-Flat
19	3296-47	2	Nut-Lock, NI
20	106-7276	3	Screw-Shoulder
21	106-7257	1	Mount-Gear, Face
22	63-2650	1	Screw-Shoulder
23	106-4476	1	Latch-Chute
24	106-7253-03	1	Tube-Support
25	3256-22	3	Washer-Flat
26	3296-42	3	Nut-Lock, NI

Ref	Part No.	Qty.	Description
27	3296-29	2	Nut-Lock, NI
28	106-7260	1	Washer-Curved
29	3230-5	1	Screw-CARR
30	3230-23	1	Screw-CARR
31	46-8091	3	Screw-HWH
32	105-9991	1	Ring-Chute
33	106-4440	1	Chute-Discharge
35	108-7315	1	Spring-Torsion
36	108-5052	1	Seal-Chute
37	3290-456	1	Washer-Belleville
38	32144-10	1	Screw-HWH

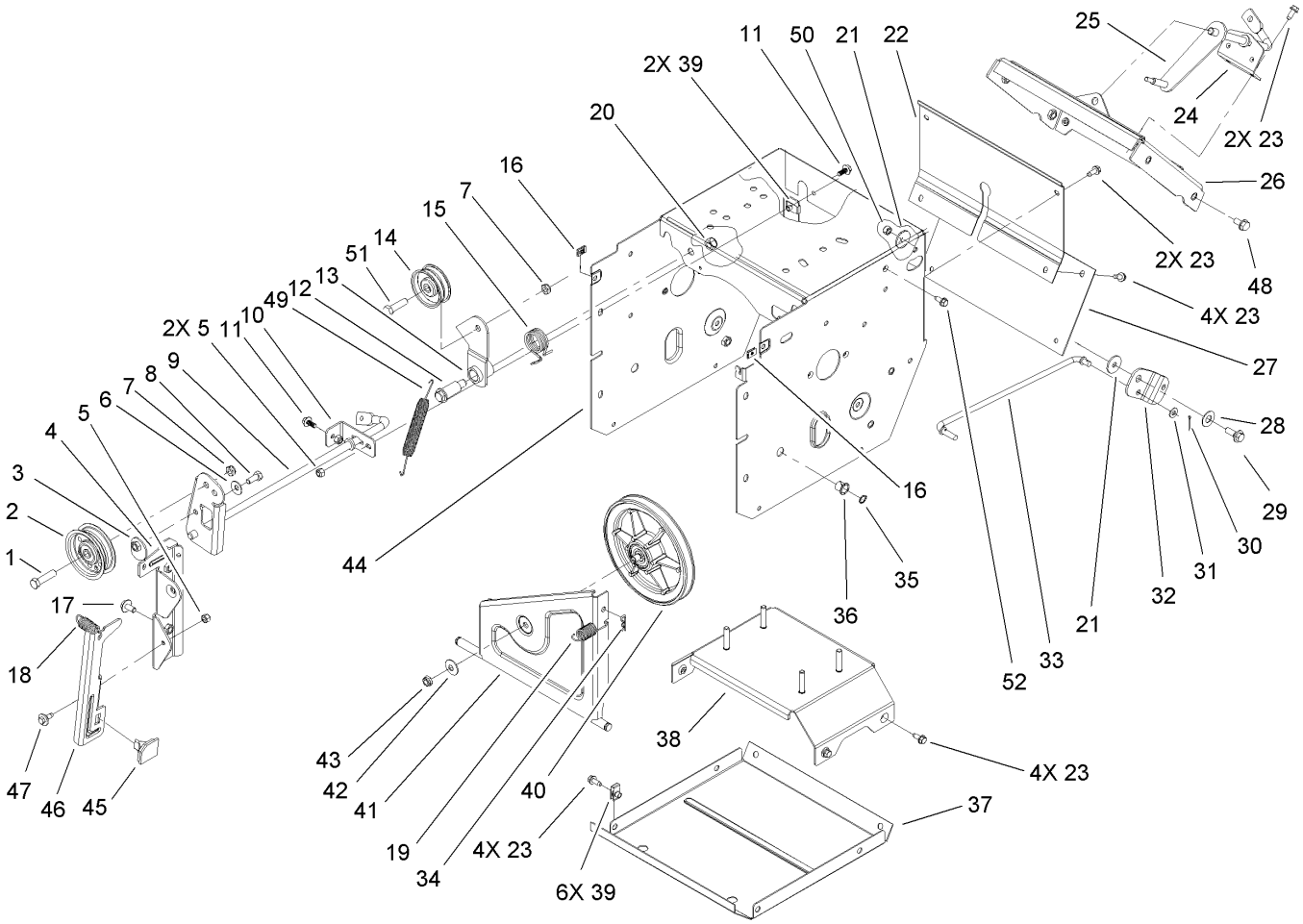

Frame Assembly

Ref	Part No.	Qty.	Description
1	323-8	1	Screw-HH
2	92-7104	1	Pulley-Idler
3	107-1047	1	Nut
4	107-1039	1	Bracket-Idler, Impeller
5	3296-42	3	Nut-Lock, NI
6	3290-456	1	Washer-Belleville
7	3296-59	2	Nut-Lock, NI
8	322-3	1	Screw-HH
9	107-3838-03	1	Impeller Clutch ASM
10	106-7341	1	Bracket-Rear, Clutch
11	99-6810	2	Screw-HH
12	108-5056	1	Bolt-Shoulder
13	108-5058	1	Arm-Idler, Traction
14	3-4244	1	Pulley-Idler
15	108-7332	1	Spring-Torsion
16	107-1013	2	Nut-Speed, U-Type
17	3234-7	2	Screw-HHF
18	107-1045	1	Spring-Extension
19	107-1003	1	Spring-Extension
20	3296-76	1	Nut-Lock, NI
21	5-4460	2	Washer-Pivot
22	108-0022-01	1	Cover-Upper
23	32144-10	16	Screw-HWH
24	108-0036	1	Bracket-Rod, Shift

Ref	Part No.	Qty.	Description
25	106-7268	1	Lever-Control, Traction
26	108-0026-01	1	Shift Plate ASM
27	106-7345-01	1	Cover-Lower
28	25-5640	1	Washer
29	27-0410	1	Screw-Shoulder
30	3272-4	1	Pin-Cotter
31	3256-23	1	Washer-Flat
32	107-1011	1	Bellcrank-Drive
33	106-4467	1	Link-Control, Speed
34	3290-307	1	Pin-Hair
35	32151-61	2	Ring-Retaining
36	256-257	2	Bushing-Nyliner
37	106-7330-01	1	Pan-Bottom
38	112-8128	1	Frame Brace ASM
39	107069	8	Clip
40	108-0031	1	Traction Pulley ASM
41	108-7307	1	Friction Wheel Bracket ASM
42	3290-340	1	Washer-Belleville
43	3296-5	1	Nut-Lock
44	114-9259-01	1	Traction Frame ASM
45	66-8060	1	Pad-Brake
46	107-1000	1	Arm-Brake
47	92-9698	1	Screw-Shoulder
48	32144-14	4	Screw-HWHTF

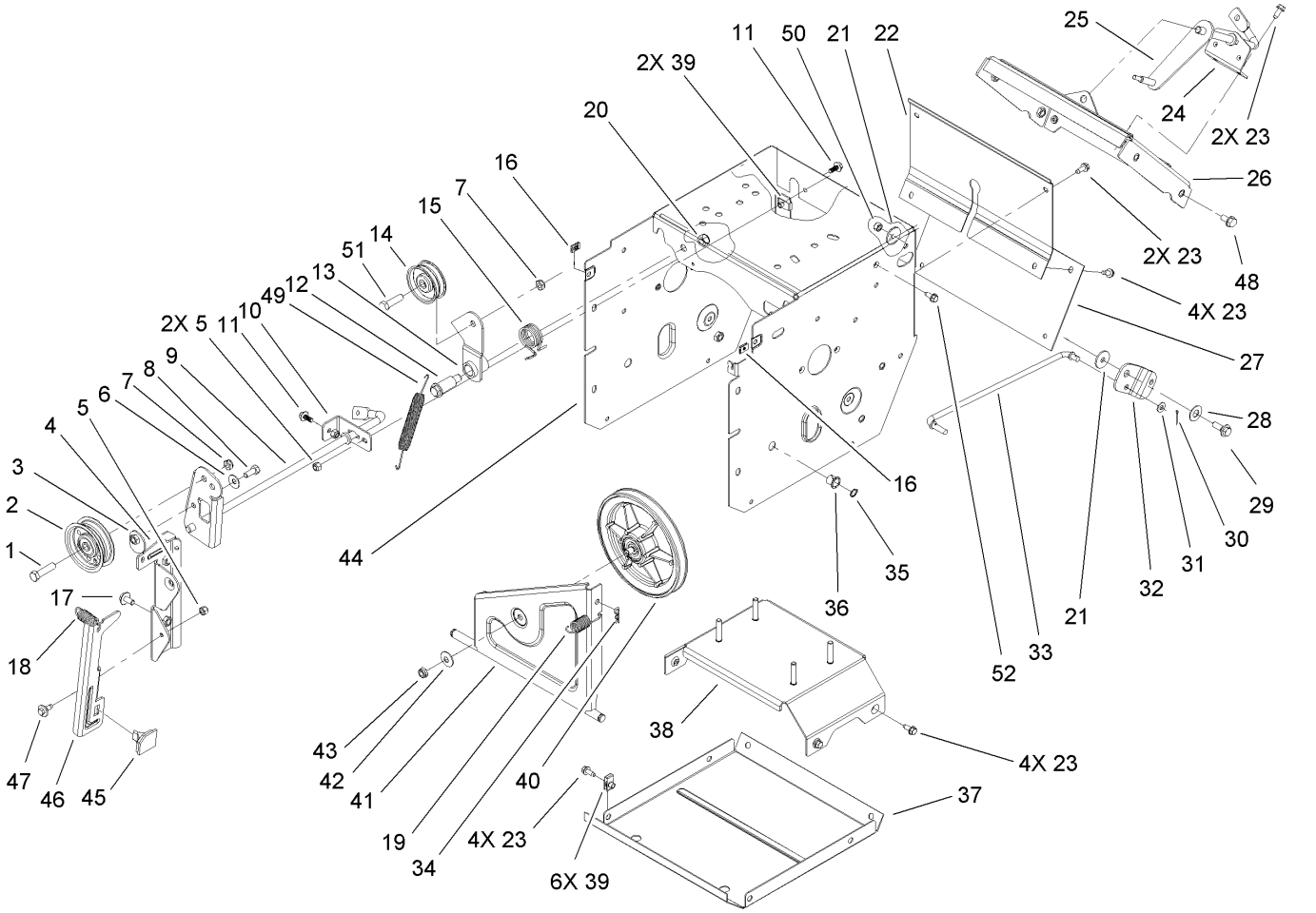

Frame Assembly (continued)

Ref	Part No.	Qty.	Description
49	108-2976	1	Spring-Extension
50	3296-29	1	Nut-Lock, NI
51	323-29	1	Screw-HH
52	32144-4	1	Screw-HWH

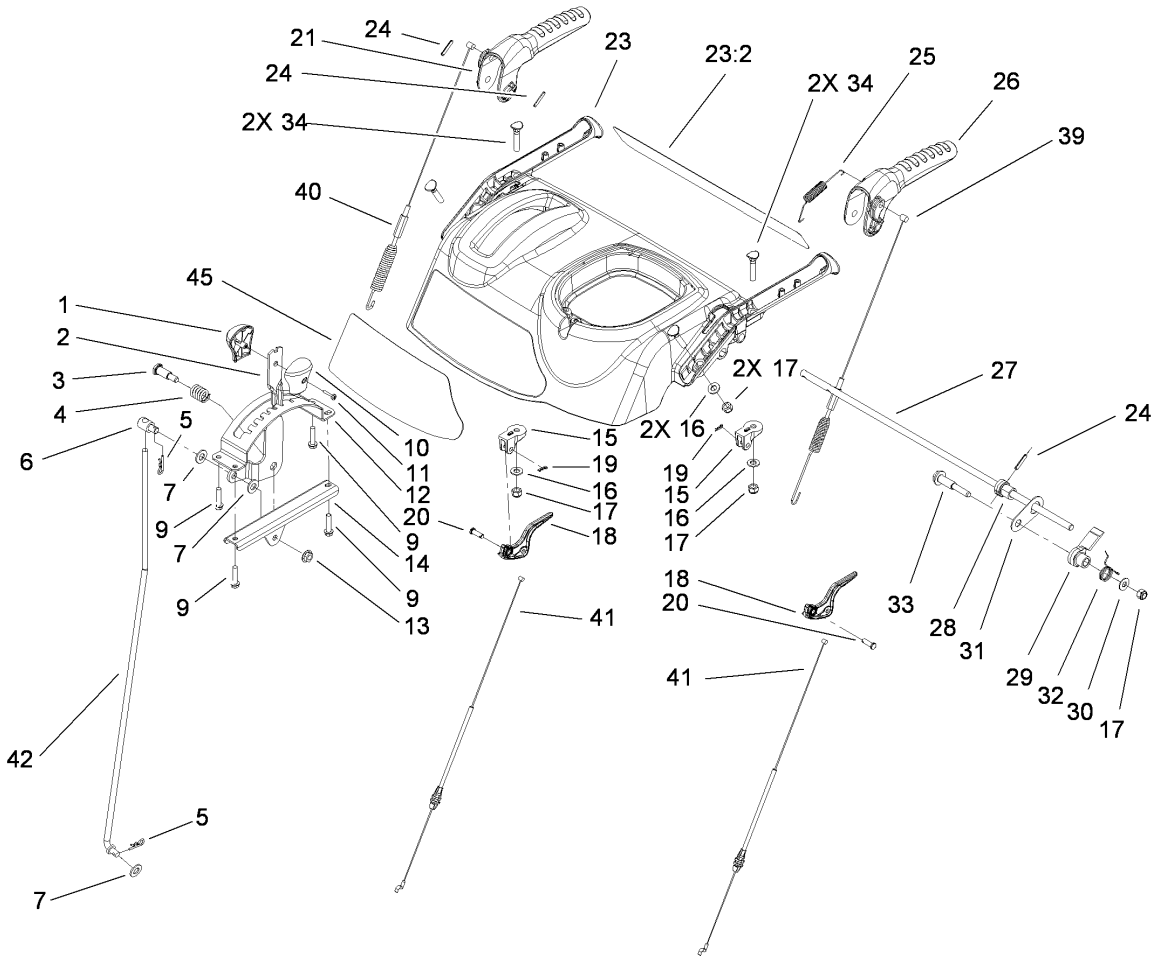

Handle Assembly

Ref	Part No.	Qty.	Description
1	106-4423	1	Knob-Shift, RH
2	106-7278-03	1	Selector-Speed
3	63-2650	1	Screw-Shoulder
4	108-7313	1	Spring-Compression
5	3290-307	2	Pin-Hair
6	110-3446	1	Trunion-Rod
7	3256-24	3	Washer-Flat
9	46-8092	4	Screw-Plastite
10	105-9999	1	Knob-Shift, LH
11	94-4496	1	Screw-PPH
12	106-7277-03	1	Guide-Selector, Speed
13	32128-13	1	Nut-HF
14	106-7279-03	1	Mount-Selector, Speed
15	105-9980	2	Mount-Clutch, Lever
16	3256-70	4	Washer-Flat
17	3296-72	5	Nut-Lock, NI
18	106-4505	2	Lever-Clutch
19	108-2992	2	Pin-Hair
20	1-808265	2	Pin-Clevis
21	106-4413	1	Lever-Auger
23	112-6633	1	Panel-Control
23:2	112-6627	1	Decal-Back, Control Panel
24	32121-125	3	Pin-Spring
25	107-3001	1	Spring-Tension

Ref	Part No.	Qty.	Description
26	106-4410	1	Lever-Traction
27	105-9996	1	Rod-Lockout
28	107-1043	1	Cam-Lockout
29	108-0023	1	Latch-Lockout
30	98-3499	1	Washer-Flat
31	107-3000	1	Link-Lockout
32	108-0024	1	Spring-Torsion
33	106-4412	1	Screw-Shoulder
34	107-3018	4	Screw-Handle
39	115-5671	1	Cable-Traction
40	115-5680	1	Cable-Auger
41	107-8896	2	Cable-Clutch
42	107-1005	1	Rod-Shift
45	112-8145	1	Decal-Control Panel

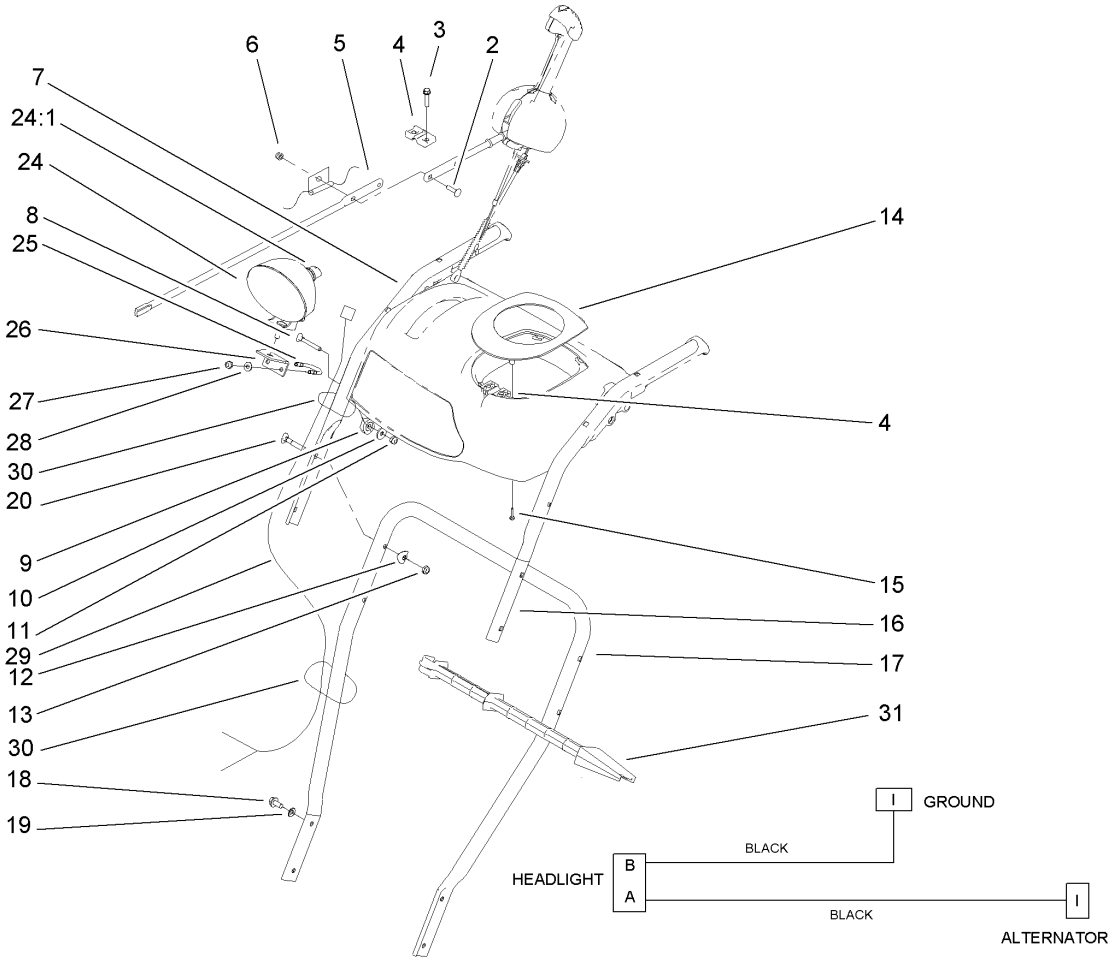

Handle and Control Assembly

Ref	Part No.	Qty.	Description
2	3229-30	2	Screw-CARR
3	46-8092	2	Screw-Plastite
4	105-9987	2	Support-Rod
5	106-7283	1	Rod-Chute, Front
6	3296-73	2	Nut-Lock, NI
7	108-0038-03	1	Handle-Upper, RH
8	95-4453	2	Screw
9	106-4509	2	Clamp-Cable
10	87-6630	2	Washer-Plain
11	3296-73	2	Nut-Lock, NI
12	107-3844	4	Washer
13	3296-72	4	Nut-Lock, NI
14	106-4586	1	Cover-Panel, Control
15	94-4496	2	Screw-PPH
16	108-0037-03	1	Handle-Upper, LH
17	105-9981-03	1	Handle-Lower
18	32144-14	4	Screw-HWHTF
19	3290-475	4	Washer-Belleville
20	92-2260	4	Screw-Handle
24	106-4510	1	Headlamp ASM
24:1	108-0008	1	Lamp-12 Volt
25	107-3024	1	Clamp
26	107-1020-03	1	Bracket-Light
27	3296-73	2	Nut-Lock, NI

Ref	Part No.	Qty.	Description
28	3256-1	2	Washer-Flat
29	106-4511	1	Harness-Wire
30	614249	2	Strap-Tie
31	110-3408	1	Stick-Cleanout

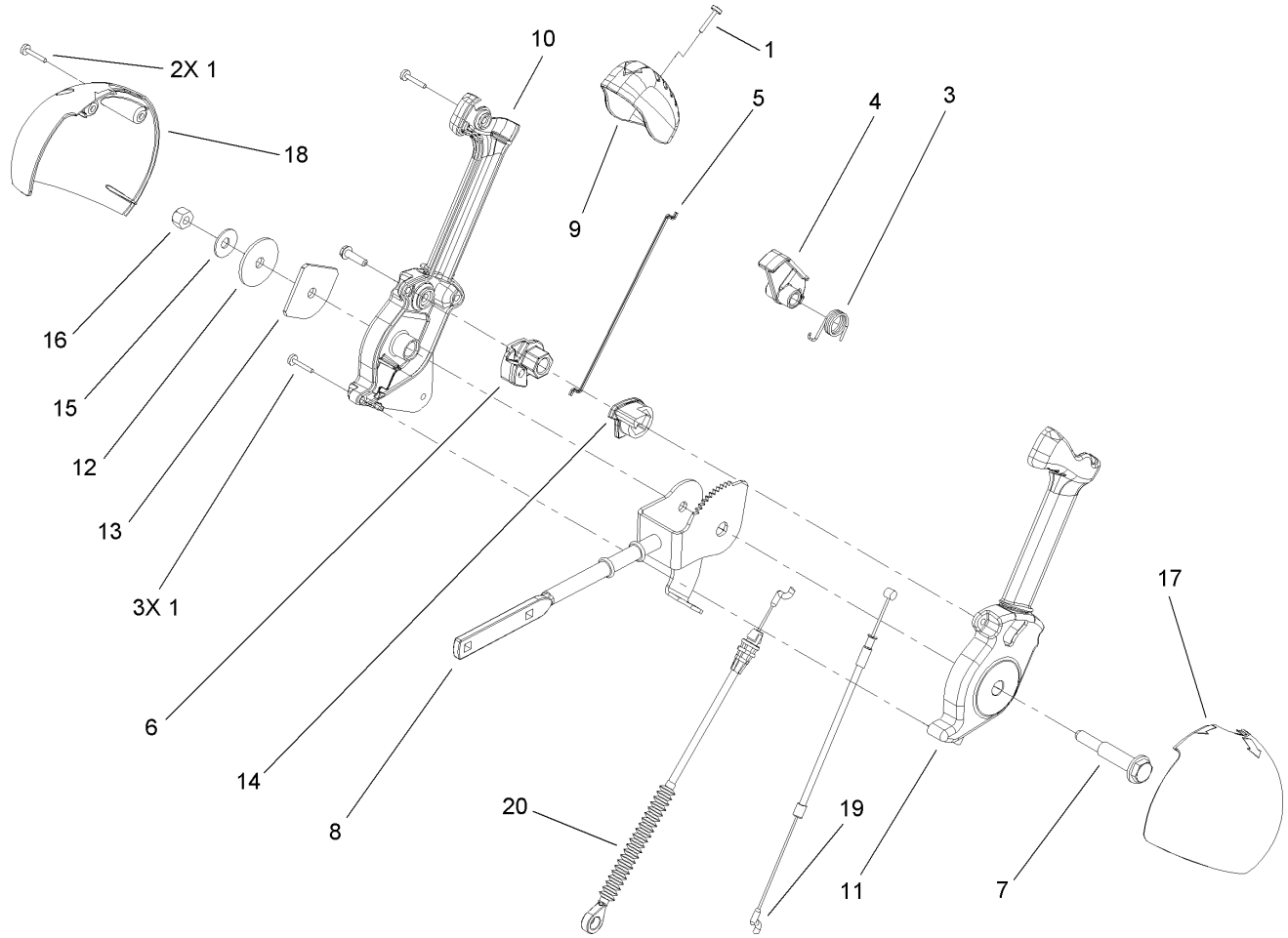

Lever Chute Control Assembly

Ref	Part No.	Qty.	Description
1	94-4496	6	Screw-PPH
3	105-9982	1	Spring-Torsion
4	105-9984	1	Trigger-Latch
5	105-9985	1	Link-Latch
6	105-9988	1	Lever-Cable, Deflector
7	105-9995	1	Screw-Shoulder
8	106-4479	1	Rod-Control, Chute
9	106-7280	1	Cap-Lever
10	106-7281	1	Lever-Chute Control, RH
11	106-7282	1	Lever-Chute Control, LH
12	107-3002	1	Washer-Nylon
13	106-7295	1	Plate-Friction
14	106-7310	1	Pawl-Latch
15	3290-456	1	Washer-Belleville
16	3296-29	1	Nut-Lock, NI
17	105-9986	1	Cover-Chute Lever, LH
18	106-7292	1	Cover-Chute Lever, RH
19	105-9989	1	Cable-Release, Chute
20	105-9990	1	Cable-Control, Deflector

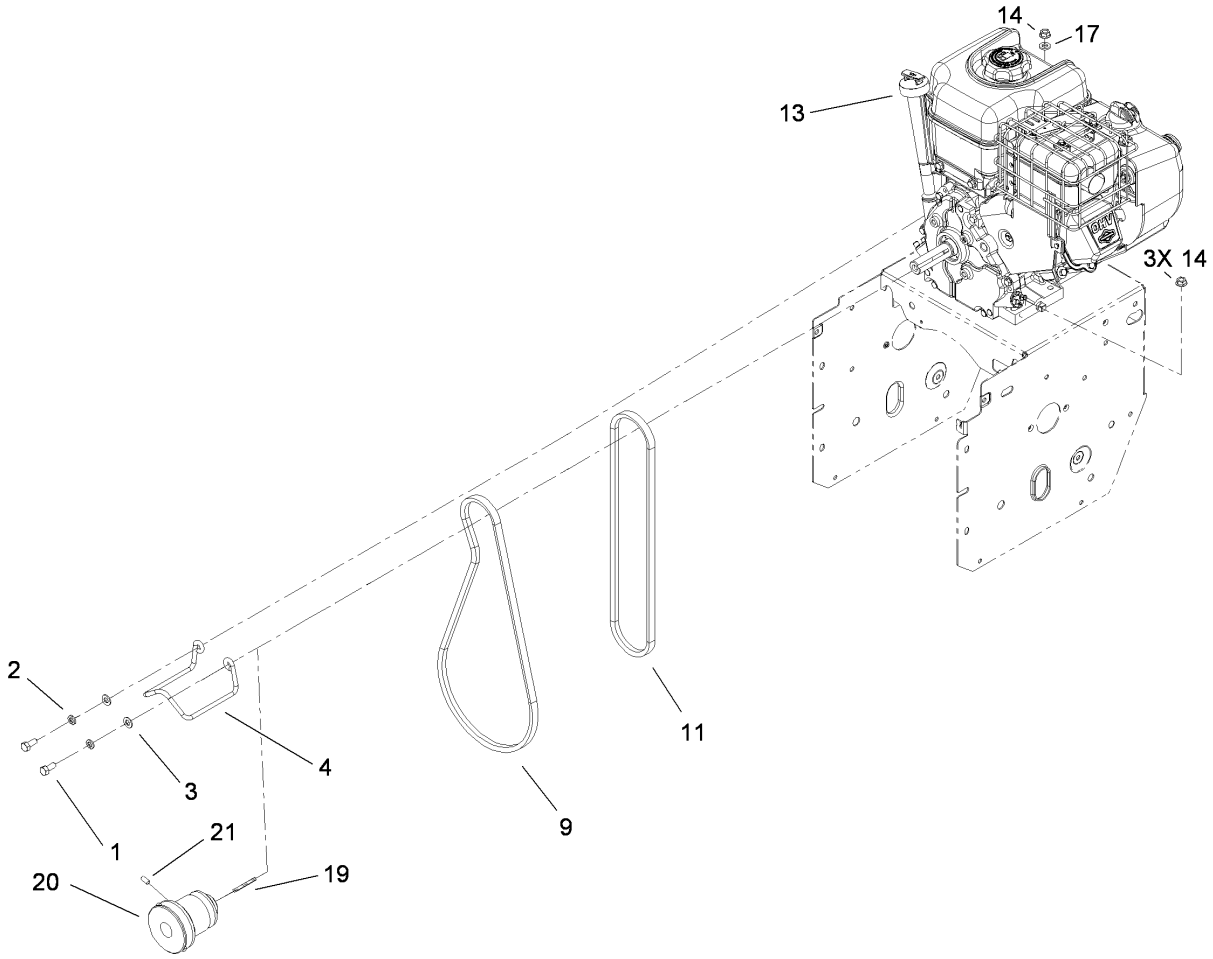

Engine Assembly

Ref	Part No.	Qty.	Description
1	3210-3	2	Screw-HH
2	3253-4	2	Washer-Lock
3	3256-23	2	Washer-Flat
4	107-3835	1	Guide-Belt
9	106-4498	1	Belt-V
11	94-8812	1	V Belt-Traction
❶❷13		1	Engine-Briggs, 15D104-0112-E1
14	32128-20	4	Nut-HF
17	3256-2	1	Washer-Flat
19	7-0036	1	Key-Square
20	114-9252	1	Pulley-Engine
21	3245-9	2	Screw-Set

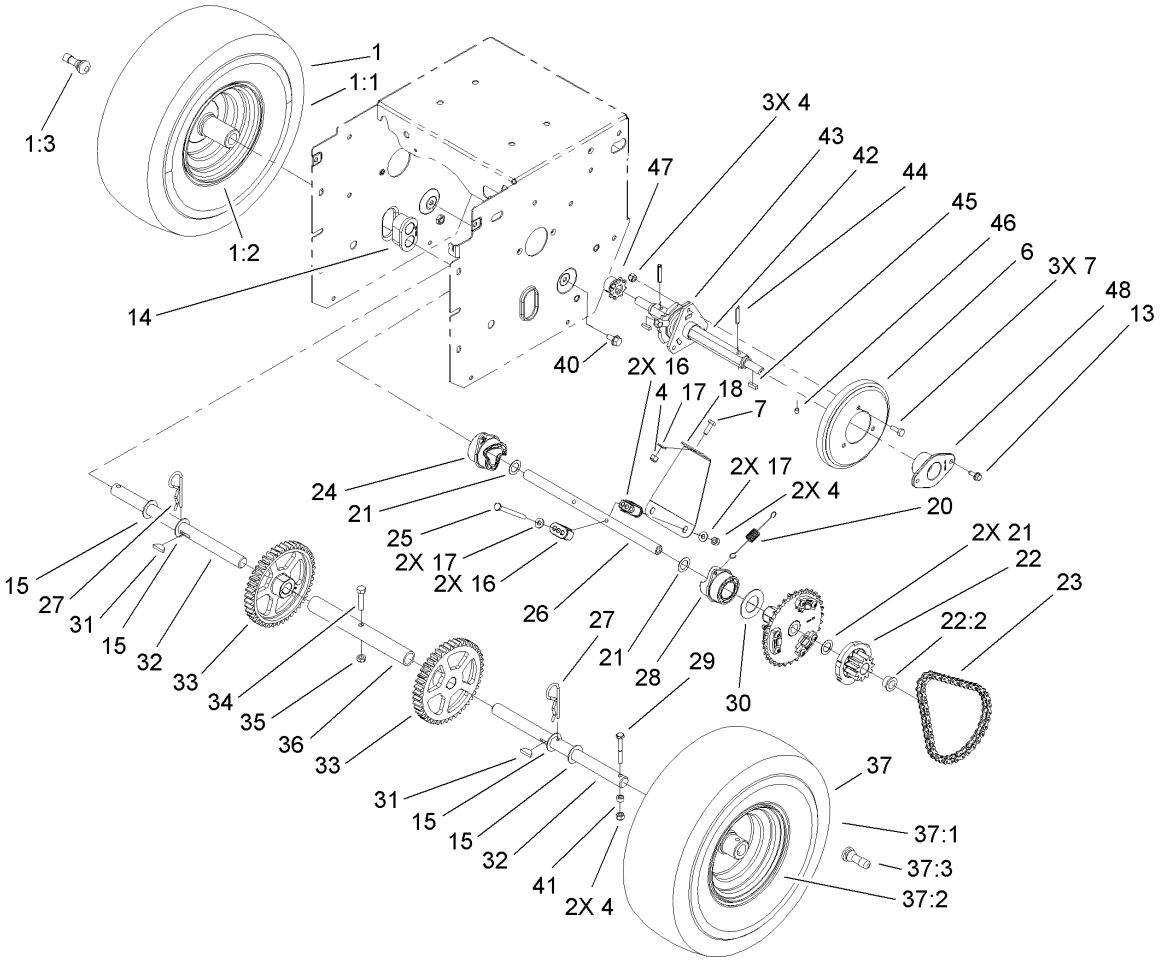

Wheel Clutch Assembly

Ref	Part No.	Qty.	Description
❶1		1	RH Wheel And Tire ASM
1:1	107-3042	1	Tire
1:2	107-3043	1	Rim-Tire
1:3	232-27	1	Stem-Valve
4	3296-42	8	Nut-Lock, NI
6	106-4480	1	Wheel-Friction
7	321-4	4	Screw-HH
13	32144-10	4	Screw-HWH
14	106-4558	2	Bearing-Axle
15	3-8664	4	Washer-Thrust
16	107-8889	4	Guide-Collar
17	3256-22	5	Washer-Flat
18	107-8892-03	1	Brace-Collar, Shift
20	107-8893	2	Spring-Extension
21	108-0015	4	Washer-Flat
22	107-8894	2	11T Gear ASM
22:2	108-2973	2	Bushing-Flange
23	108-0016	2	Chain-Roller
23	2710-6	2	Link-Connecting
24	107-8888	1	Collar-Shift, RH
25	321-23	2	Screw-HH
26	107-8883	1	Shaft-Intermediate
27	3290-343	2	Pin-Hair
28	107-8887	1	Collar-Shift, LH

Ref	Part No.	Qty.	Description
29	108-2975	2	Screw-HH
30	107-8891	2	Washer-Thrust
31	3257-7	2	Key-Woodruff
32	107-8898	2	Shaft-Axle
33	106-4572	2	Gear-Axle, 44 Tooth
34	322-17	1	Screw-HH
35	3296-47	1	Nut-Lock, NI
36	106-7259	1	Tube-Axle
❶37		1	LH Wheel And Tire ASM
37:1	107-3042	1	Tire
37:2	107-3043	1	Rim-Tire
37:3	232-27	1	Stem-Valve
40	32144-14	2	Screw-HWHTF
41	55-9370	2	Spacer-Blade, Rotor
42	108-7314	1	Shaft-Hex
43	106-4434	1	Trunion-Hex
44	32121-9	2	Pin-Roll, Slotted
45	94-8850	2	Key-Square
46	3245-32	4	Screw-HSH
47	106-7317	2	Sprocket-8 Tooth
48	108-7319	2	Retainer-Bearing

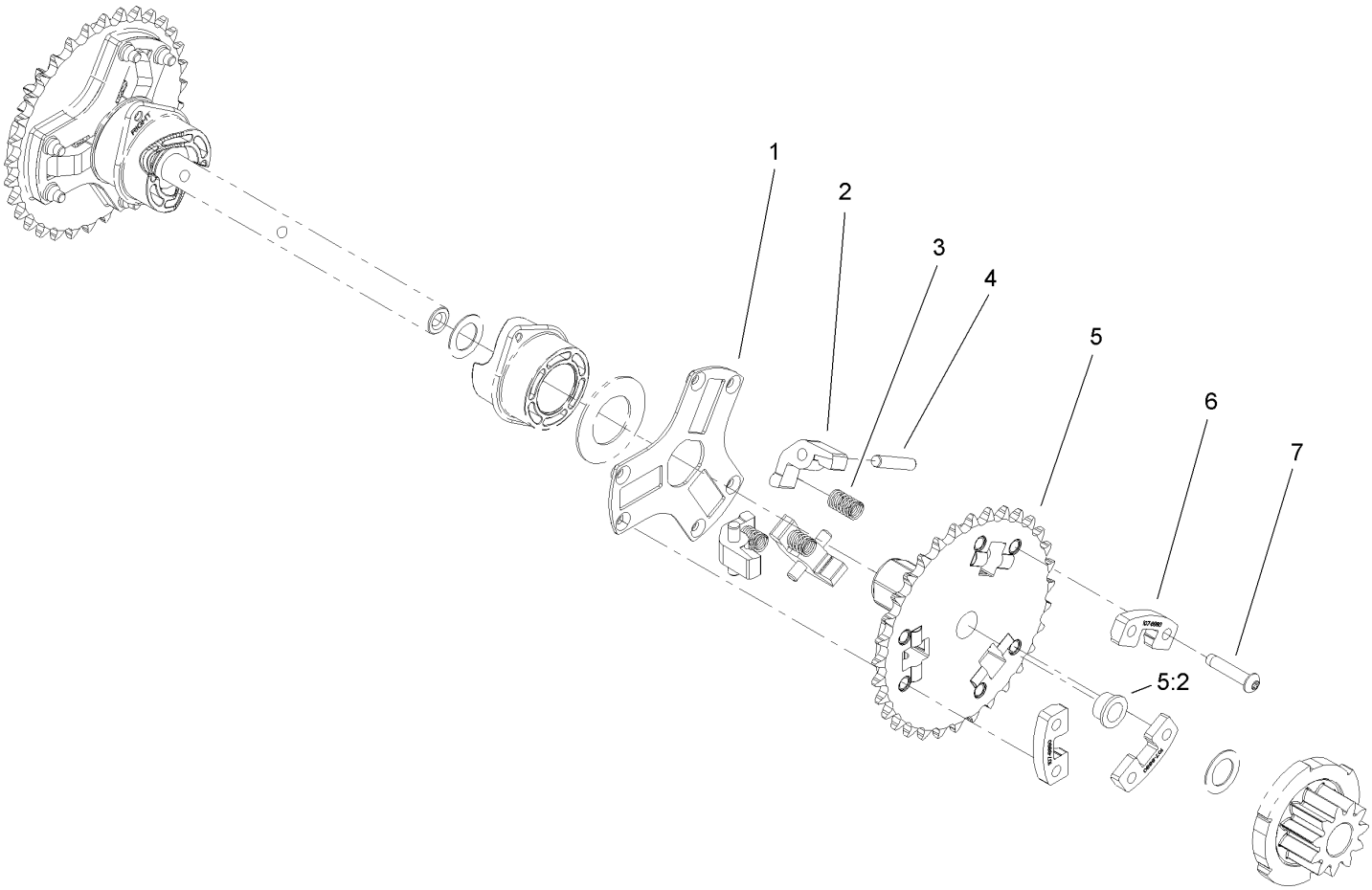

Wheel Clutch Sprocket Assembly

Ref	Part No.	Qty.	Description
1	107-8886	2	Retainer-Pawl Pin
2	107-8879	6	Pawl-Clutch
3	107-8885	6	Spring-Compression
4	107-8899	6	Pin-Dowel
5	107-8895	2	32T Sprocket ASM
5:2	108-2973	2	Bushing-Flange
6	107-8880	6	Support-Pawl
7	108-0035	12	Screw-Torx Button Head

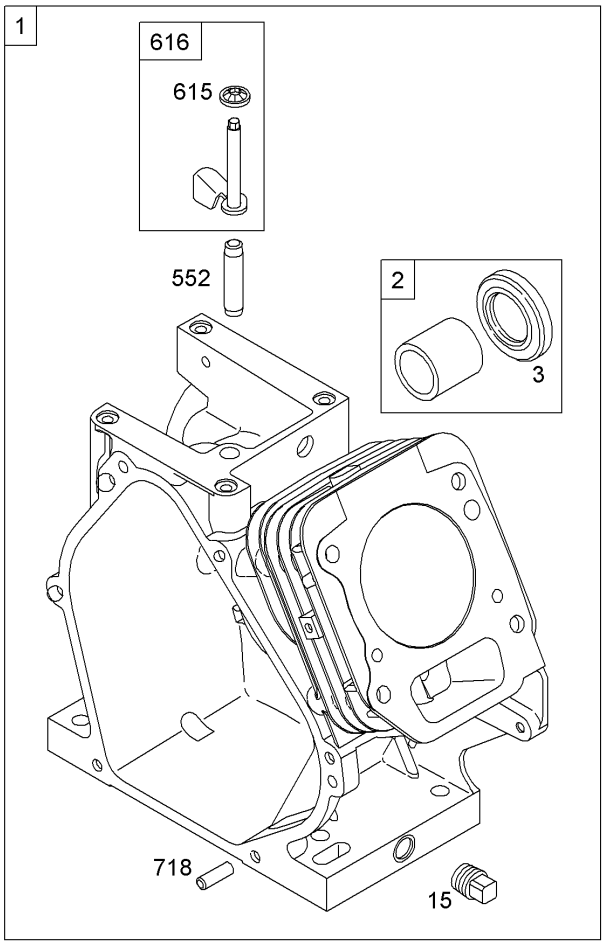

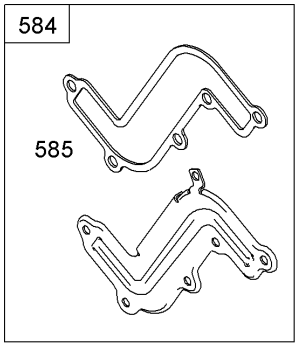

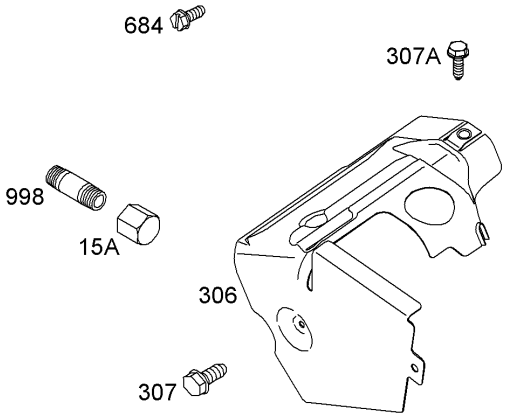

Assemblies include all parts shown in frames

Cylinder Assembly
Briggs and Stratton 15D104-0112-E1

Ref	Part No.	Qty.	Description
❷1	794188	1	Cylinder ASM
❷2	399269	1	Bushing And Seal Kit (Magneto Side)
❷❹3	299819s	1	Seal-Oil (Magneto Side)
❷15	691686	1	Plug-Drain, Oil (Square Head)
❷15A	695757	1	Plug-Oil Drain
❷306	695710	1	Shield-Cylinder
❷307	699483	1	Screw (Cylinder Shield)
❷307A	699234	1	Screw (Cylinder Shield)
❷552	692346	1	Bushing-Crank, Governor
❷584	791759	1	Cover-Passage, Breather
❷❹585	791760	1	Cup-Flywheel
❷615	692576	1	Retainer-Shaft, Governor
❷616	692547	1	Crank-Governor
❷684	793369	1	Screw (Breather Passage Cover)
❷718	690959	1	Pin-Locating
❷998	794701	1	Pipe-Oil

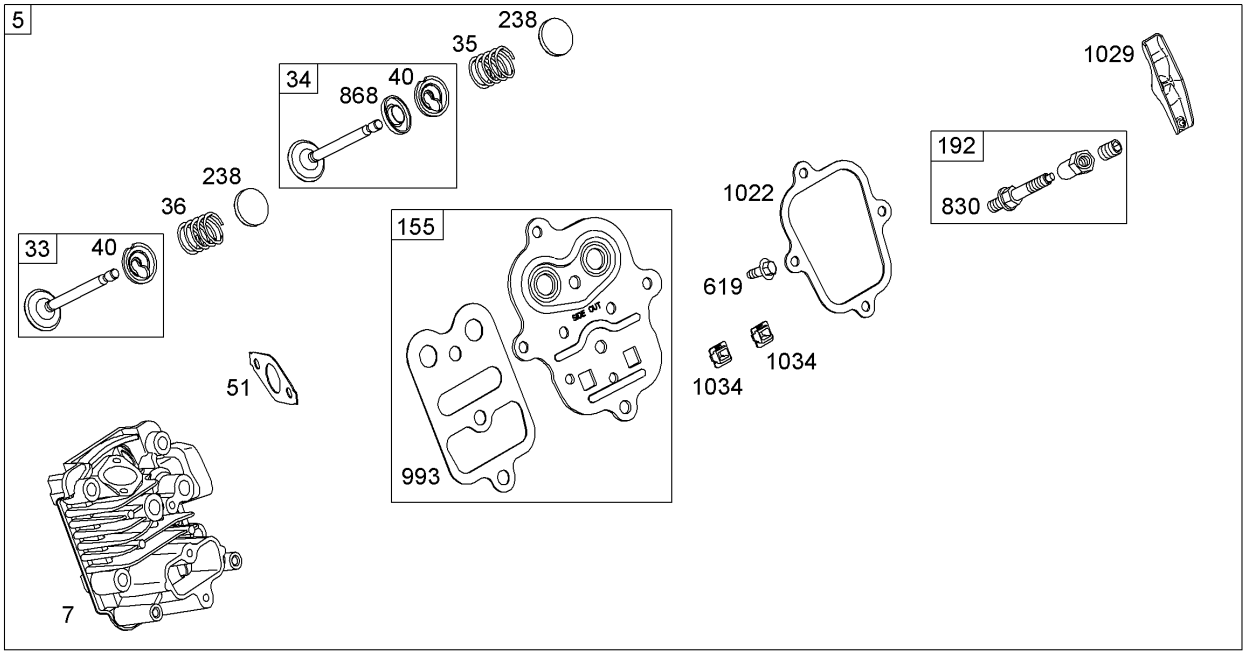

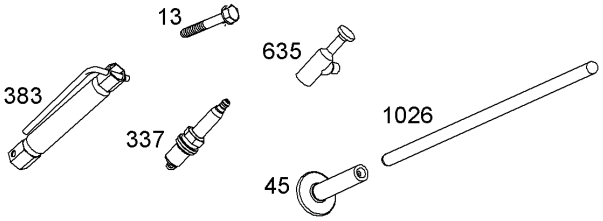

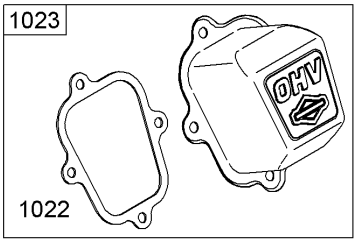

Assemblies include all parts shown in frames

Cylinder Head Assembly
Briggs and Stratton 15D104-0112-E1

Ref	Part No.	Qty.	Description
❷5	791720	1	Head-Cylinder
❷❹7 ❻	791716	1	Gasket-Head, Cylinder
❷13	699482	1	Screw (Cylinder Head)
❷33	499642	1	Valve-Exhaust
❷34	499641	1	Valve-Intake
❷35	691304	1	Spring-Valve (Intake)
❷36	691304	1	Spring-Valve (Exhaust)
❷40	692194	1	Retainer-Valve
❷45	690977	1	Tappet-Valve
❷❹51 ❻	791718	1	Gasket-Intake
❷155	698214	1	Plate-Head, Cylinder
❷192	694543	1	Adjuster-Arm, Rocker
❷238	691300	1	Cap-Valve
❷337	691043	1	Spark Plug
❷383	19374s	1	Wrench-Spark Plug
❷619	699480	1	Screw (Cylinder Head Plate)
❷635	692927	1	Boot-Sparkplug
❷830	694544	1	Stud (Rocker Arm)
❷❹868 ❻	692044	1	Seal-Valve
❷914	699480	1	Screw (Rocker Cover) (Bottom)
❷914A	692557	1	Screw (Rocker Cover) (Top)
❷914B	697551	1	Screw (Rocker Cover) (Center)

Ref	Part No.	Qty.	Description
❷❹993 ❻	694088	1	Gasket-Head Plate, Cylinder
❷❹1022 ❻	691890	1	Gasket-Cover, Rocker
❷1023	499924	1	Cover-Arm, Rocker
❷1026	790287	1	Rod-Push
❷1029	691230	1	Arm-Rocker
❷1034	691343	1	Guide-Rod, Push

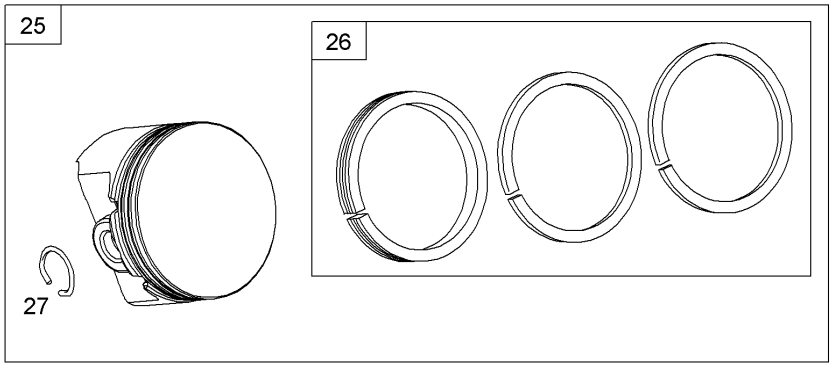

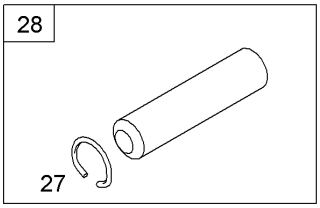

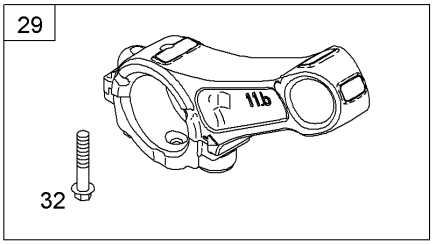

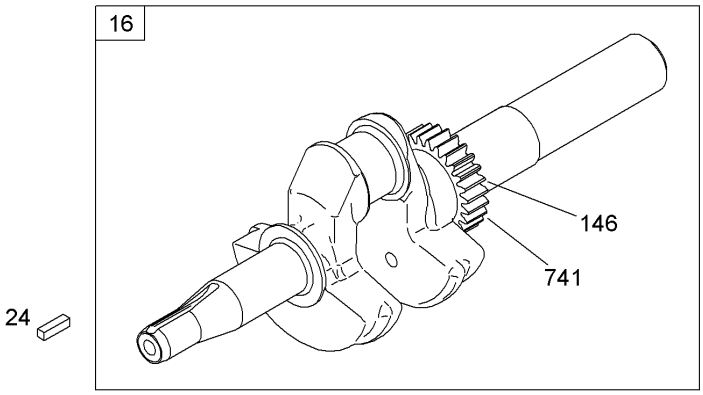

Assemblies include all parts shown in frames

Crankshaft Assembly
Briggs and Stratton 15D104-0112-E1

Ref	Part No.	Qty.	Description
❷16	791721	1	Crankshaft
❷24	222698s	1	Key-Flywheel
❷25	791786	1	Piston ASM (STD)
❷25	791791	1	Piston ASM (.020 O S)
❷26	791787	1	Ring Set (STD)
❷26	791792	1	Ring Set (.020 O S)
❷27	690975	1	Lock-Pin, Piston
❷28	690229	1	Pin-Piston (STD)
❷29	791783	1	Rod-Connecting
❷32	791784	1	Screw (Connecting Rod)
❷146	690979	1	Key-Timing
❷741	695087	1	Gear-Timing

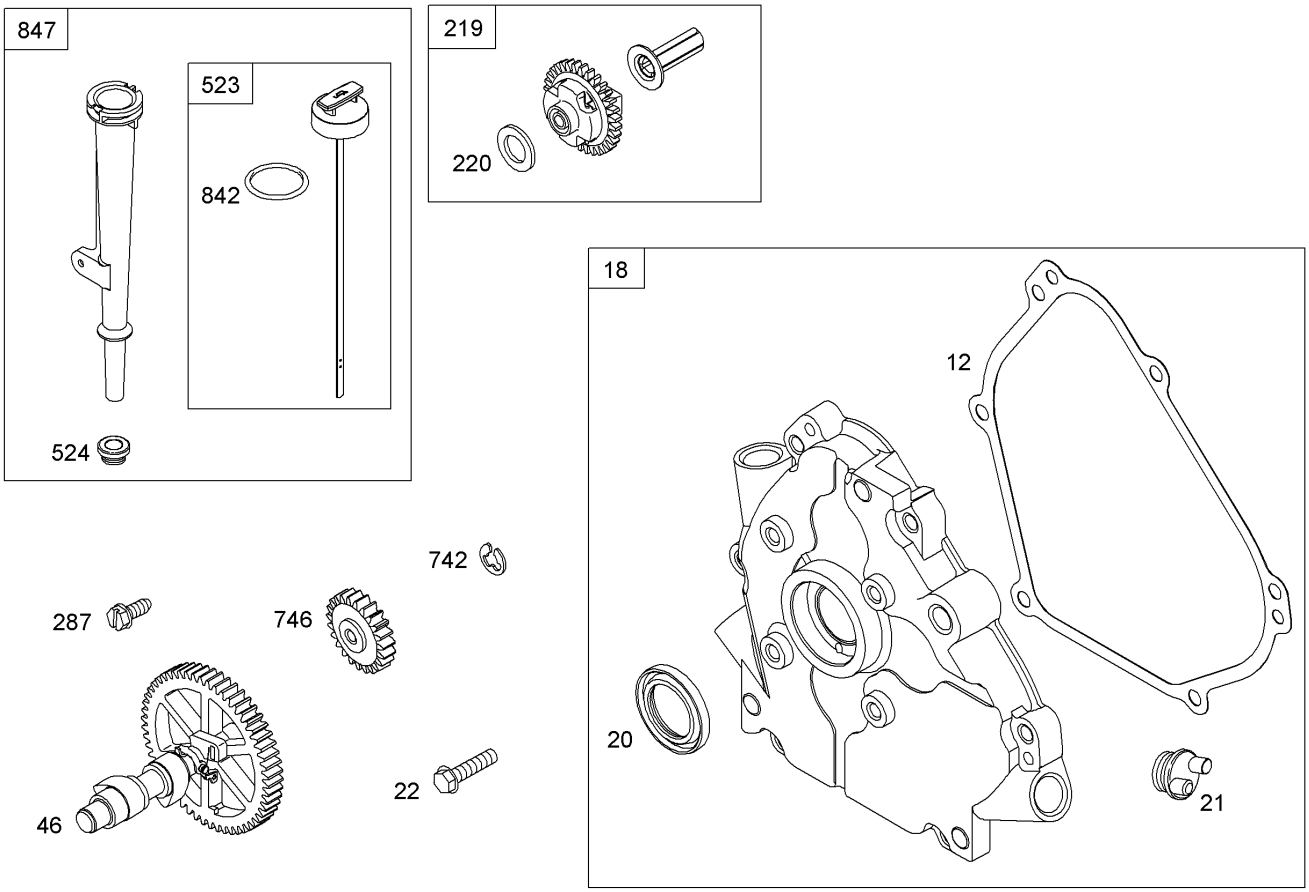

Assemblies include all parts shown in frames

Crankcase Assembly
Briggs and Stratton 15D104-0112-E1

Ref	Part No.	Qty.	Description
❷12	699485	1	Gasket-Cover, Crankcase
❷18	699696	1	Cover-Crankcase
❷20	692550	1	Seal-Oil (PTO Side)
❷21	281658S	1	Cap-Fill, Oil
❷22	699478	1	Screw (Crankcase Cover)
❷46	693404	1	Camshaft
❷219	693578	1	Gear-Governor
❷220	691724	1	Washer (Governor Gear)
❷287	699629	1	Screw (Dipstick Tube)
❷523	693618	1	Dipstick
❷524	281370S	1	Seal-Tube, Dipstick
❷742	692564	1	Retainer-E Ring
❷746	790278	1	Gear-Idler
❷842	691031	1	Seal-O Ring (Dipstick Tube)
❷847	693617	1	Dipstick And Tube ASM

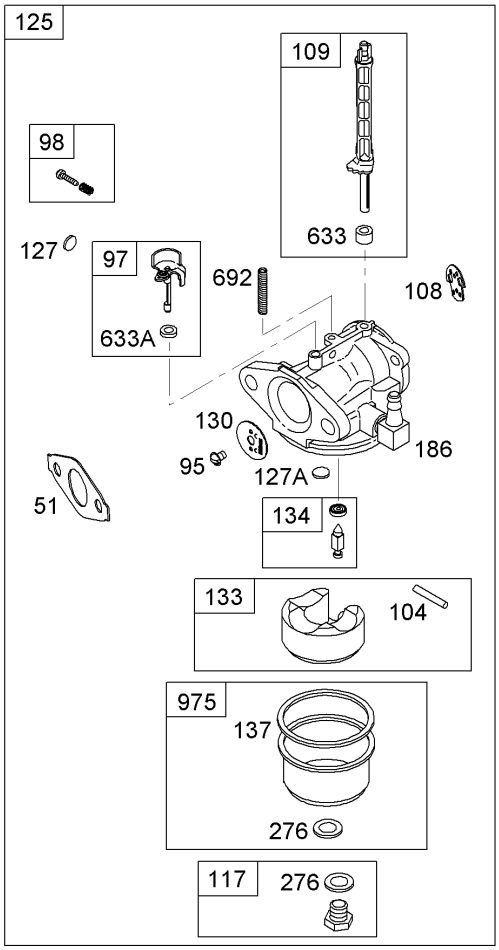

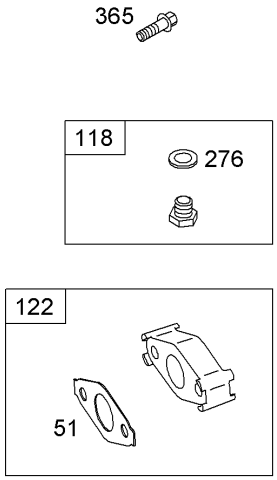

Assemblies include all parts shown in frames

Carburetor Assembly
Briggs and Stratton 15D104-0112-E1

Ref	Part No.	Qty.	Description
❷❸51 ❹❺	791718	1	Gasket-Intake
❷95	691636	1	Screw (Throttle Valve)
❷97	690024	1	Shaft-Throttle
❷98	398185	1	Idle Speed Kit
❷❸104	691242	1	Pin-Hinge, Float
❷108	695807	1	Valve-Choke
❷109	791957	1	Shaft-Choke
❷117	694176	1	Jet-Main (STD)
❷118	690048	1	Jet-Main (High Altitude)
❷122	791717	1	Spacer-Carburetor
❷125	794588	1	Carburetor
❷127	694468	1	Plug-Welch
❷❸127A	691739	1	Plug-Welch
❷130	691181	1	Valve-Throttle
❷133	398187	1	Float-Carburetor
❷❸134	398188	1	Needle And Seat Kit
❷❸137 ❺	693981	1	Gasket-Bowl, Float
❷186	692317	1	Connector-Hose
❷❸276	271716	1	Washer-Sealing
❷365	699484	1	Screw (Carburetor)
❷❸633 ❺	693867	1	Seal-Shaft, Choke Throttle

Ref	Part No.	Qty.	Description
❷❸633A ❺	691321	1	Seal-Shaft, Choke Throttle
❷692	690572	1	Spring-Detent
❷975	790559	1	Bowl-Float

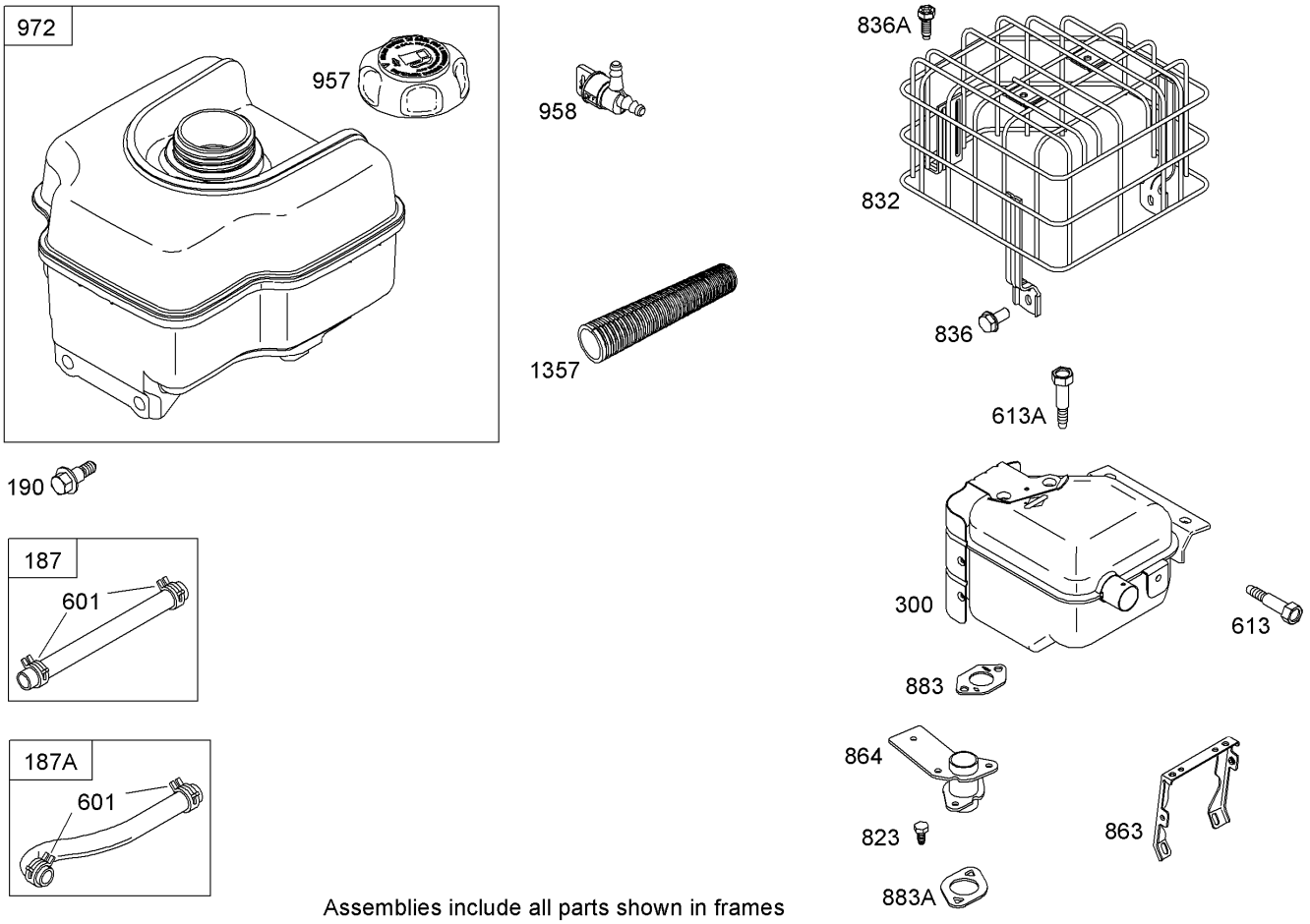

Assemblies include all parts shown in frames

Muffler and Fuel Tank Assembly
Briggs and Stratton 15D104-0112-E1

Ref	Part No.	Qty.	Description
❷187	791766	1	Line-Fuel (Cut To Required Length)
❷187A	791867	1	Line-Fuel (Molded)
❷190	699220	1	Screw (Fuel Tank)
❷300	699512	1	Muffler
❷601	791850	1	Clamp-Hose
❷613	697812	1	Screw (Muffler)
❷613A	699480	1	Screw (Muffler)
❷823	699209	1	Screw (Muffler Adapter)
❷832	699313	1	Guard-Muffler
❷836	791972	1	Screw (Muffler Guard)
❷836A	699234	1	Screw (Muffler Guard)
❷863	699849	1	Bracket-Muffler
❷864	699232	1	Adapter-Muffler
❷❹883	692237	1	Gasket-Exhaust
❷❹883A	691893	1	Gasket-Exhaust
❷957	792647	1	Cap-Tank, Fuel
❷958	698180	1	Valve-Shut Off, Fuel
❷972	694260	1	Tank-Fuel
❷1357	794700	1	Sleeve-Fuel Line

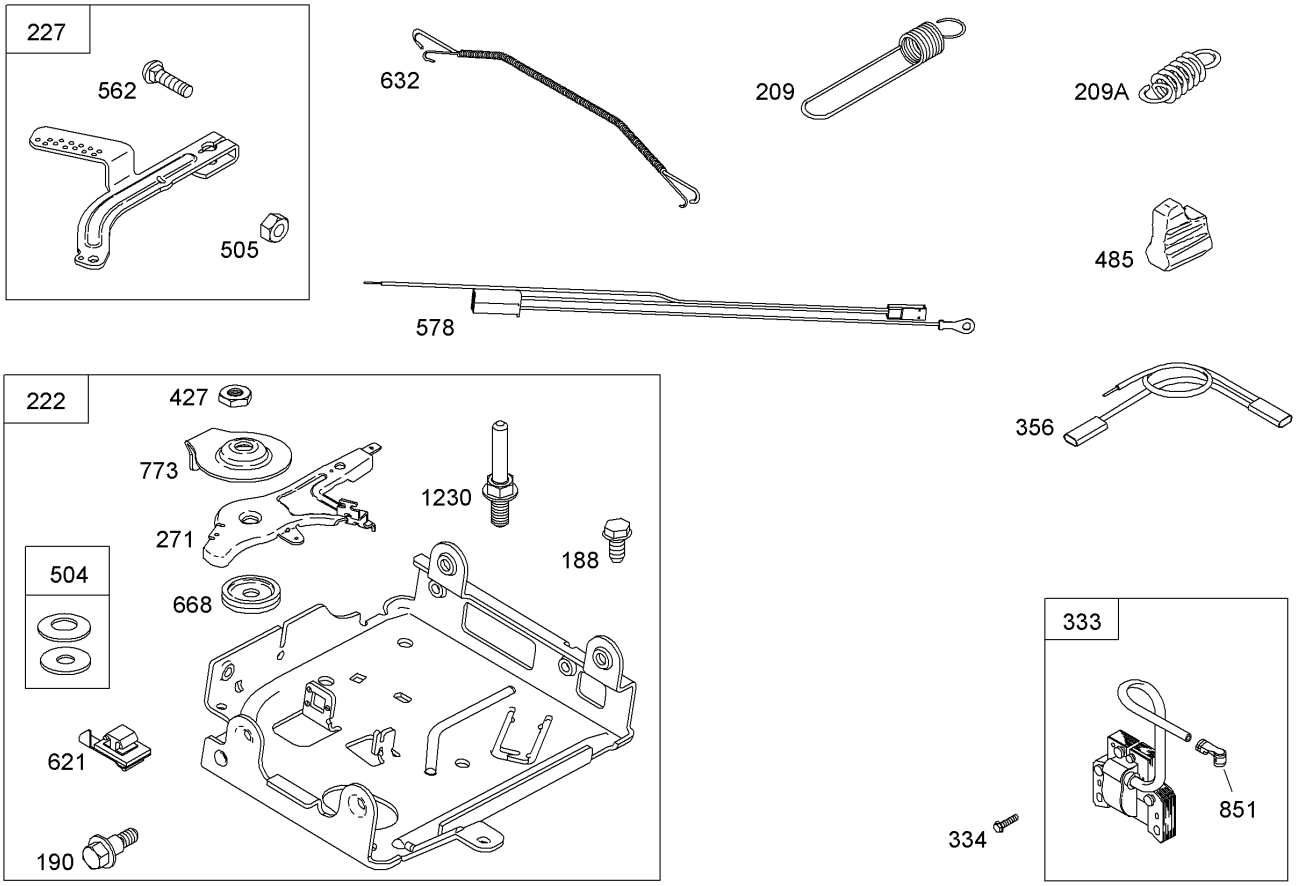

Assemblies include all parts shown in frames

Governor Assembly
Briggs and Stratton 15D104-0112-E1

Ref	Part No.	Qty.	Description
❷188	699479	1	Screw (Control Bracket)
❷190	699220	1	Screw (Fuel Tank)
❷209	692571	1	Spring-Governor
❷209A	691278	1	Spring-Governor
❷222	793109	1	Bracket-Control
❷227	692573	1	Lever-Control, Governor
❷271	698038	1	Lever-Control
❷333	695711	1	Armature-Magneto
❷334	699477	1	Screw (Magneto Armature)
❷356	695731	1	Wire-Stop
❷427	694255	1	Nut (Control Bracket)
❷485	695755	1	Knob-Control
❷504	694254	1	Friction Washer Set
❷505	691251	1	Nut (Governor Control Lever)
❷562	691119	1	Bolt (Governor Control Lever)
❷578	794819	1	Wire ASM
❷621	692310	1	Switch-Stop
❷632	692653	1	Link-Spring, Mechanical Governor
❷668	694257	1	Spacer
❷773	694258	1	Retainer
❷851	493880s	1	Terminal-Spark Plug
❷1230	699847	1	Screw (Control Bracket)

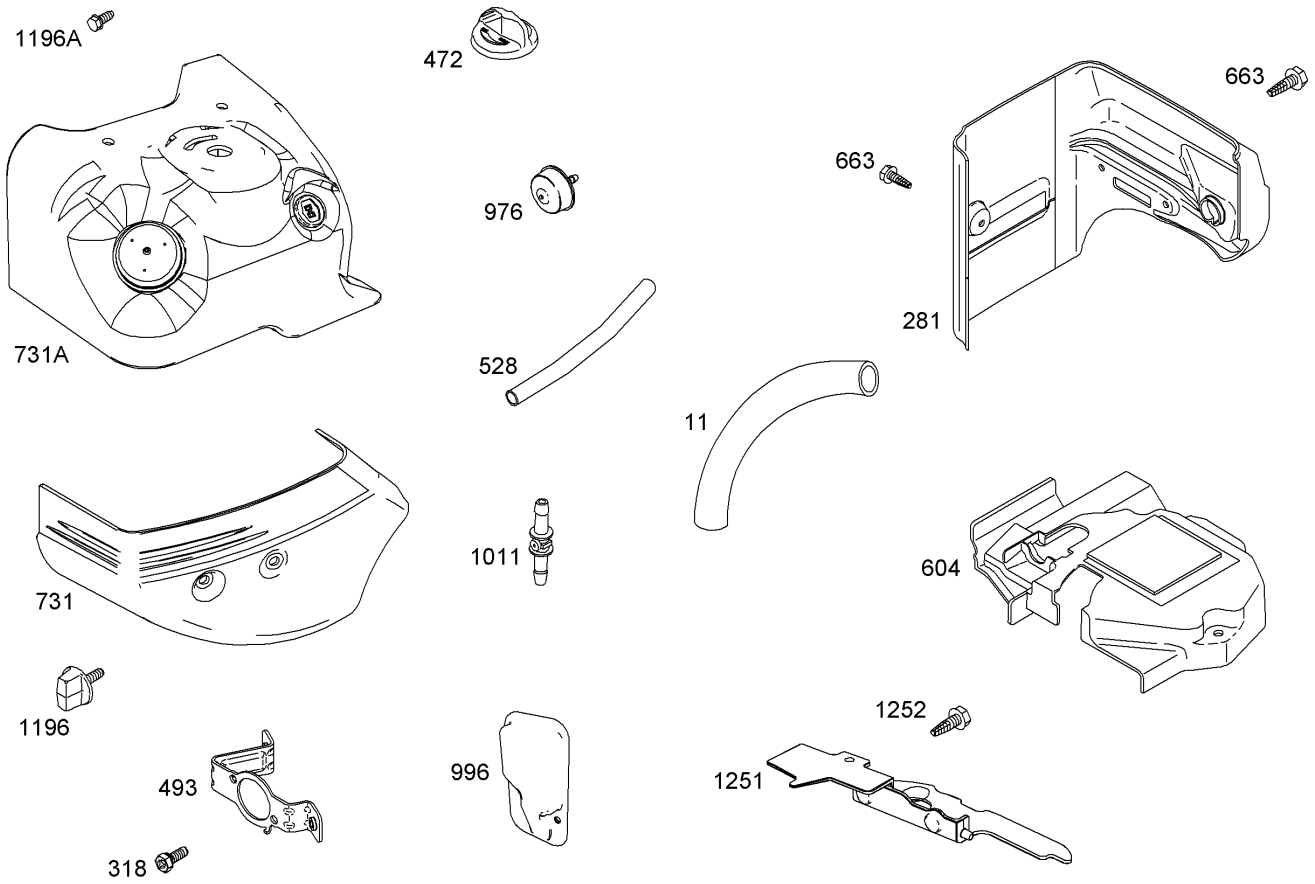

Assemblies include all parts shown in frames

Shroud Assembly
Briggs and Stratton 15D104-0112-E1

Ref	Part No.	Qty.	Description
❷11	695745	1	Tube-Breather
❷281	793131	1	Panel-Control
❷318	690370	1	Screw (Mounting Bracket)
❷472	791958	1	Knob-Choke Shaft
❷493	695744	1	Bracket-Mounting
❷528	793006	1	Hose-Primer
❷604	793134	1	Cover-Control
❷663	699854	1	Screw (Control Panel)
❷731	794703	1	Hood-Snow
❷731A	794704	1	Hood-Snow
❷976	790221	1	Primer-Carburetor
❷996	794687	1	Shield-Carburetor
❷1011	794544	1	Tube-Vent
❷1196	696692	1	Screw (Snow Hood)
❷1196A	699854	1	Screw (Snow Hood)
❷1251	794702	1	Shield-Snow
❷1252	699234	1	Screw (Snow Shield)

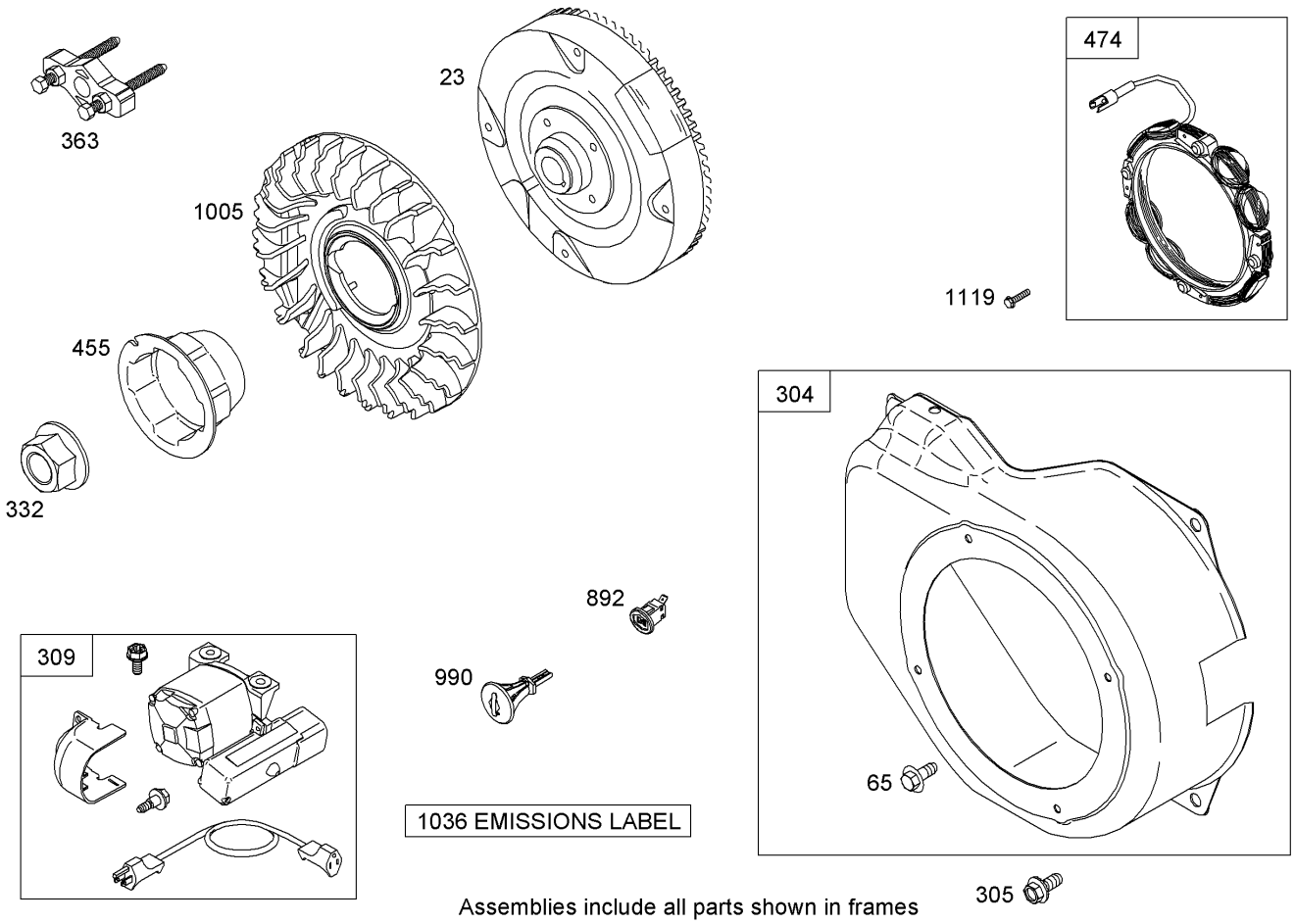

Assemblies include all parts shown in frames

Blower Housing Assembly
Briggs and Stratton 15D104-0112-E1

Ref	Part No.	Qty.	Description
❷23	699516	1	Flywheel
❷65	699228	1	Screw (Rewind Starter)
❷304	699598	1	Housing-Blower
❷305	699480	1	Screw (Blower Housing)
❷309	699786	1	Motor-Starter (230V)
❷309	699192	1	Motor-Starter (120V)
❷332	792723	1	Nut (Flywheel)
❷363	19203	1	Puller-Flywheel
❷455	692591	1	Cup-Flywheel
❷474	791743	1	Alternator
❷892	791944	1	Switch-Key
❷990	695756	1	Key
❷1005	794273	1	Fan-Flywheel
❷1036		1	Label-Emissions
❷1119	699772	1	Screw (Alternator)

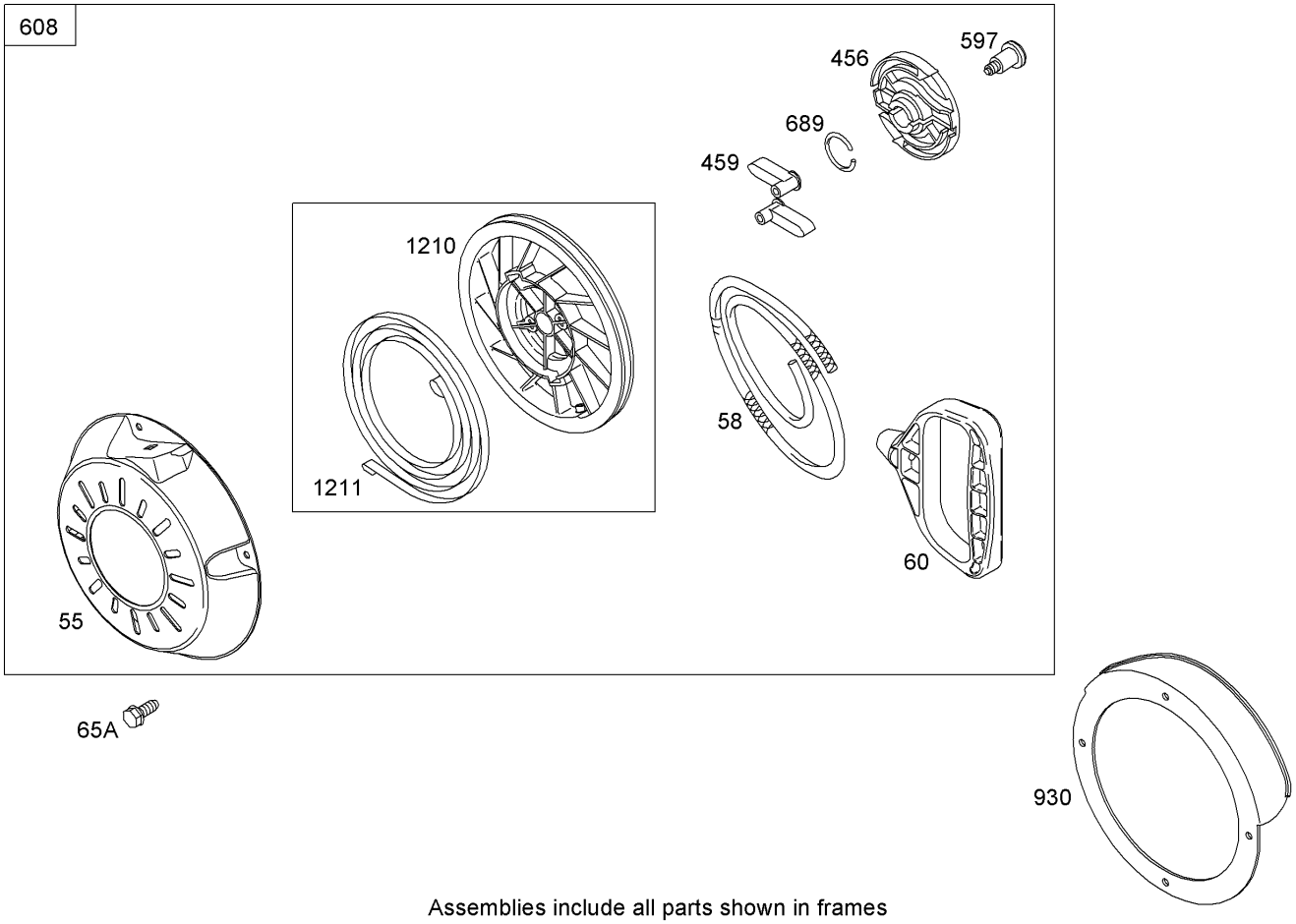

Assemblies include all parts shown in frames

Rewind Starter Assembly
Briggs and Stratton 15D104-0112-E1

Ref	Part No.	Qty.	Description
❷55	696710	1	Housing-Rewind Starter
❷65A	699851	1	Screw (Rewind Starter)
❷58	693389	1	Rope-Starter
❷60	699334	1	Grip-Starter Rope
❷456	692299	1	Plate-Friction, Pawl
❷459	281505s	1	Ratchet-Pawl
❷597	691696	1	Screw (Pawl Friction Plate)
❷608	699335	1	Starter-Rewind
❷689	691855	1	Spring-Friction
❷930	696709	1	Guard-Rewind
❷1210	498144	1	Pulley And Spring ASM (Pulley)
❷1211	498144	1	Pulley And Spring ASM (Spring)

358 ENGINE GASKET SET

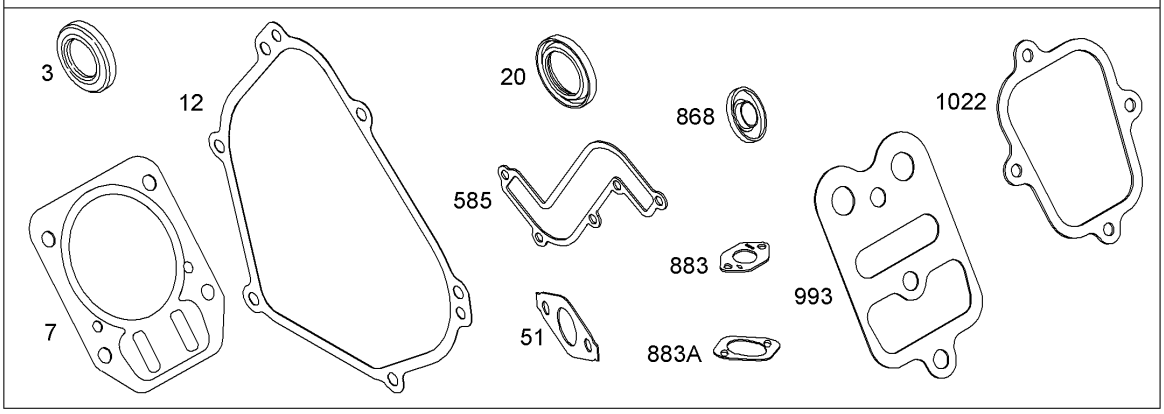

1095 VALVE GASKET SET

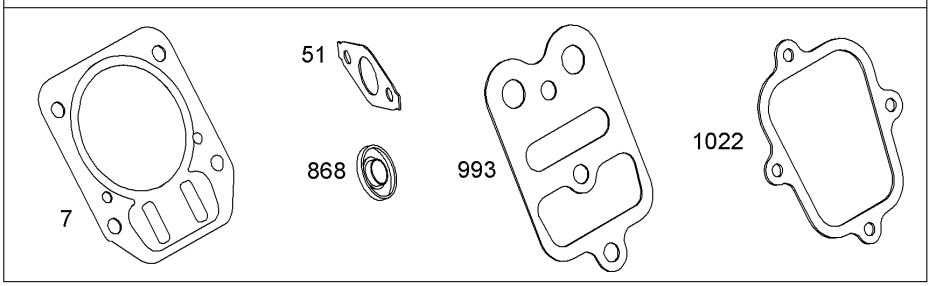

Assemblies include all parts shown in frames

Gasket Kit
Briggs and Stratton 15D104-0112-E1

Ref	Part No.	Qty.	Description
❷❹3	299819s	1	Seal-Oil (Magneto Side)
❷❹7 ❻	791716	1	Gasket-Head, Cylinder
❷❹12	699485	1	Gasket-Cover, Crankcase
❷❹20	691952	1	Seal-Oil (PTO Side)
❷❺51 ❹❺	791718	1	Gasket-Intake
❷358	791797	1	Engine Gasket Set
❷❹585	791760	1	Cup-Flywheel
❷❹868 ❻	692044	1	Seal-Valve
❷❹883	692237	1	Gasket-Exhaust
❷❹883A	691893	1	Gasket-Exhaust
❷❹993 ❻	694088	1	Gasket-Head Plate, Cylinder
❷❹1022 ❻	691890	1	Gasket-Cover, Rocker
❷1095	791798	1	Valve Gasket Set

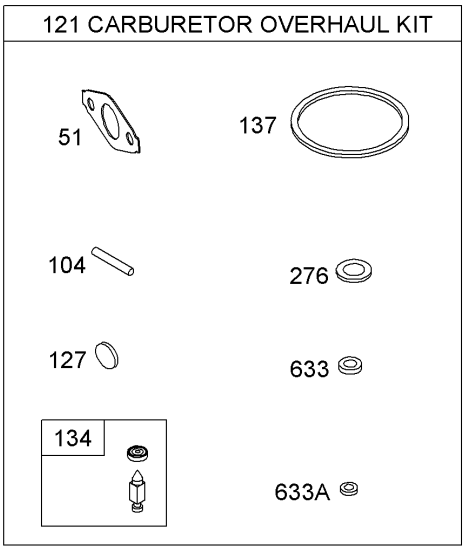

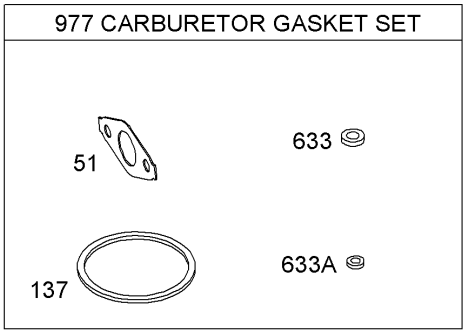

Assemblies include all parts shown in frames

Carburetor Overhaul Kit
Briggs and Stratton 15D104-0112-E1

Ref	Part No.	Qty.	Description
❷❸51 ❹❺	791718	1	Gasket-Intake
❷❸104	691242	1	Pin-Hinge, Float
❷121	792006	1	Carburetor Overhaul Kit
❷❸127	691739	1	Plug-Welch
❷❸134	398188	1	Needle And Seat Kit
❷❸137 ❺	693981	1	Gasket-Bowl, Float
❷❸276	271716	1	Washer-Sealing
❷❸633 ❺	691321	1	Seal-Shaft, Choke Throttle
❷❸633A ❺	693867	1	Seal-Shaft, Choke Throttle
❷977	792007	1	Carburetor Gasket Set

Attachments and Accessories

For 38637 - Power Max 828 OXE Snowthrower

Product Name	Model/Part
Tire Chain Kit	107-3813
Snow Cab	107-3814
Weight Kit	107-3815
28 Inch Drift Breaker	107-3817

NOTES

TORO®