FORM NO. 3316–133

TORO®

MODEL NO. 20922B–3900001 & UP

PARTS CATALOG

48cm REAR BAGGING MOWER

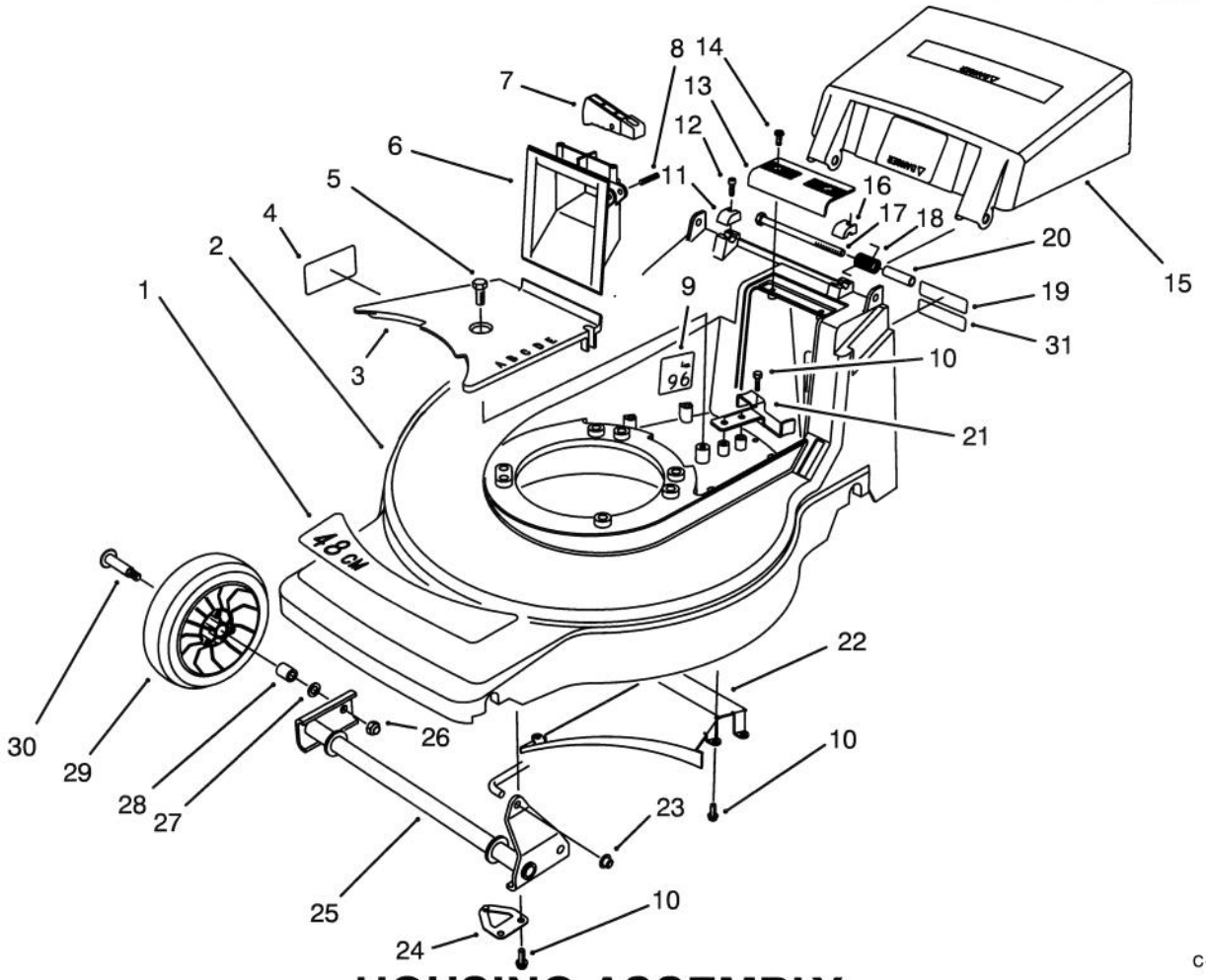

C–1515

HOUSING ASSEMBLY

Ref. No.	Part No.	Description	No. Used
1	71–9860	Decal – 48cm	1
2	16–1669	Housing – 48cm (Incl. Ref. # 4)	1
3	71–7920	Cover – Belt	1
4	62–3860	Decal – Danger	1
5	32144–70	Screw – Hex. Flange Hd.	1
6	71–7870	Grip – Lower	1
7	71–7930	Trigger – H.O.C.	1
8	3284–5	Pin – Roll	1
9		Decal – Noise Rating	1
10	32144–4	Screw – Thread Forming	10
11	71–7910	Cap – Hinge Bolt R.H.	1
12	65–5210	Screw – Thread Forming	2
13	71–7860	Grip – Upper	1
14	32144–97	Screw – Thread Forming	2
15	71–9800	Door – Discharge	1
16	71–7900	Cap – Hinge Bolt L.H.	1

Ref. No.	Part No.	Description	No. Used
17	322–29	Screw – Cap Hex. Hd.	2
18	71–9840	Spring – Door	2
19	66–0680	Decal – French Regulation	1
20	71–8580	Spacer – Door	2
21	71–7890	Guide – Belt Rear	1
22	71–7990	Ramp – Discharge	1
23	32112–11	Nut – Push	1
24	71–8830	Retainer – Shaft	2
25	71–7820	Pivot – Front	1
26	3296–5	Nut – Lock	2
27	40–1940	Washer – Wheel	2
28	27–6250	Bushing – Wheel	4
29	46–1113	Wheel & Tire Assembly (Incl. Ref. #28)	2
30	27–6230	Bolt – Wheel	2
31		Decal – Power Rating	1

© The TORO Company – 1993
All Rights Reserved

TPS

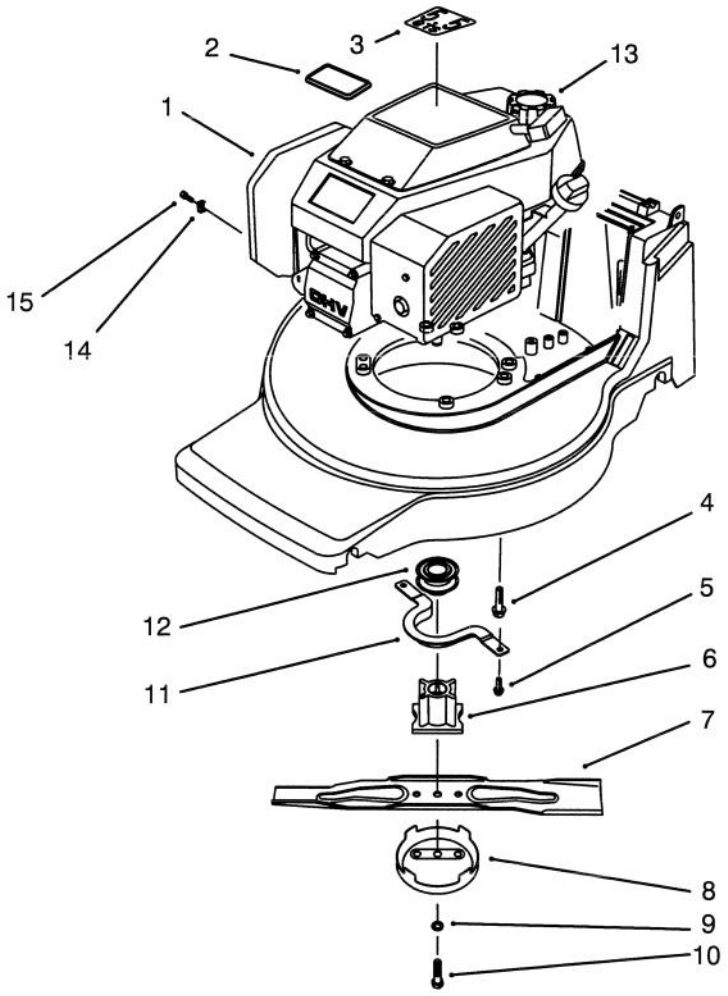

ENGINE ASSEMBLY

Ref. No.	Part No.	Description	No. Used
1	92–6528	Engine – Complete	1
2	92–2289	Plate – Toro Logo	1
3	80–4800	Decal – Recoil	1
4	32144–102	Screw – Thread Forming	3
5	32144–4	Screw – Thread Forming	2
6	71–7940	Retainer – Blade	1
7	71–8210	Blade – 48cm	1
8	80–2770	Cup – Anti–Scalp	1

Ref. No.	Part No.	Description	No. Used
9	3253–22	Washer – Lock	1
10	26–0672	Bolt – Blade	1
11	71–7960	Guide – Engine Belt	1
12	62–7550	Pulley – Driver	1
13	55–3570	Cap – Gas	1
14	2210–249	Clamp – Casing	1
15	86–7990	Screw – Clamp	1

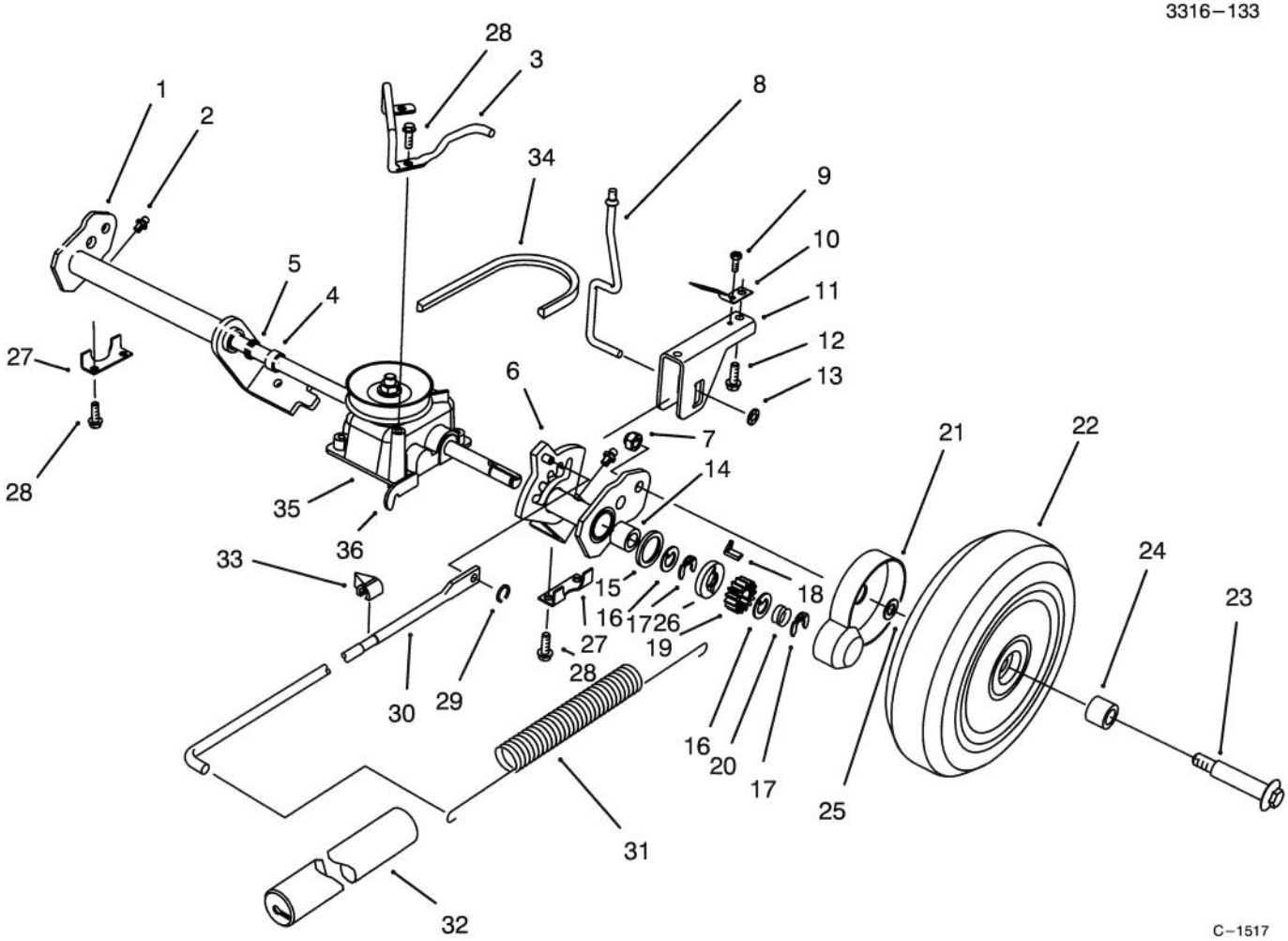

S. P. REAR AXLE ASSEMBLY

Ref. No.	Part No.	Description	No. Used
1	71–9820	Rear Pivot Assembly R.H. (Incl. Ref. #2, 4, 5 & 14)	1
2	302–26	Fitting – Grease	2
3	71–9850	Retainer – Belt	1
4	47–2890	Bushing – Sleeve	2
5	47–6730	Seal – Grease	2
6	71–9810	Rear Pivot Assembly L.H. (Incl. Ref. #2, 4, 5 & 14)	1
7	3296–5	Nut – Lock	2
8	71–7840	Rod – Trigger	1
9	32144–31	Screw – Thread Forming	1
10	71–8060	Spring – Trigger Return	2
11	71–8080	Saddle – H.O.C.	1
12	63–8590	Screw – Thread Forming	2
13	32112–13	Nut – Push	1
14	48–2060	Bearing – Needle	2
15	65–4710	Washer – Friction	2
16	65–4740	Washer – Keyed Thrust	4
17	65–2720	Ring – Retaining	4
18	66–6050	Key – Rocking L.H.	1
*	66–6040	Key – Rocking R.H.	1

Ref. No.	Part No.	Description	No. Used
19	65–4750	Gear – Pinion	2
20	65–4720	Spring – Compression	2
21	74–1660	Cover – Wheel	2
22	14–9959	Wheel, Tire & Gear Assy. (Incl. Ref. #24)	2
23	27–6230	Bolt – Wheel	2
24	27–6250	Bushing – Wheel	4
25	74–1670	Spacer – Wheel	2
26	65–4760	Washer – Clutch	2
27	71–7770	Plate – Rear Securing	2
28	32144–4	Screw – Thread Forming	6
29	32151–93	Ring – Grip	1
30	71–7970	Rod – Link	1
31	71–7740	Spring – Counterbalance	1
32	71–8450	Cover – Spring	1
33	71–7980	Indicator – H.O.C.	1
34	71–9450	V– Belt	1
35	71–9600	Gearcase Assembly (Incl. Ref. #36)	1
36	71–9630	Bracket – Traction	1

*Not Illustrated

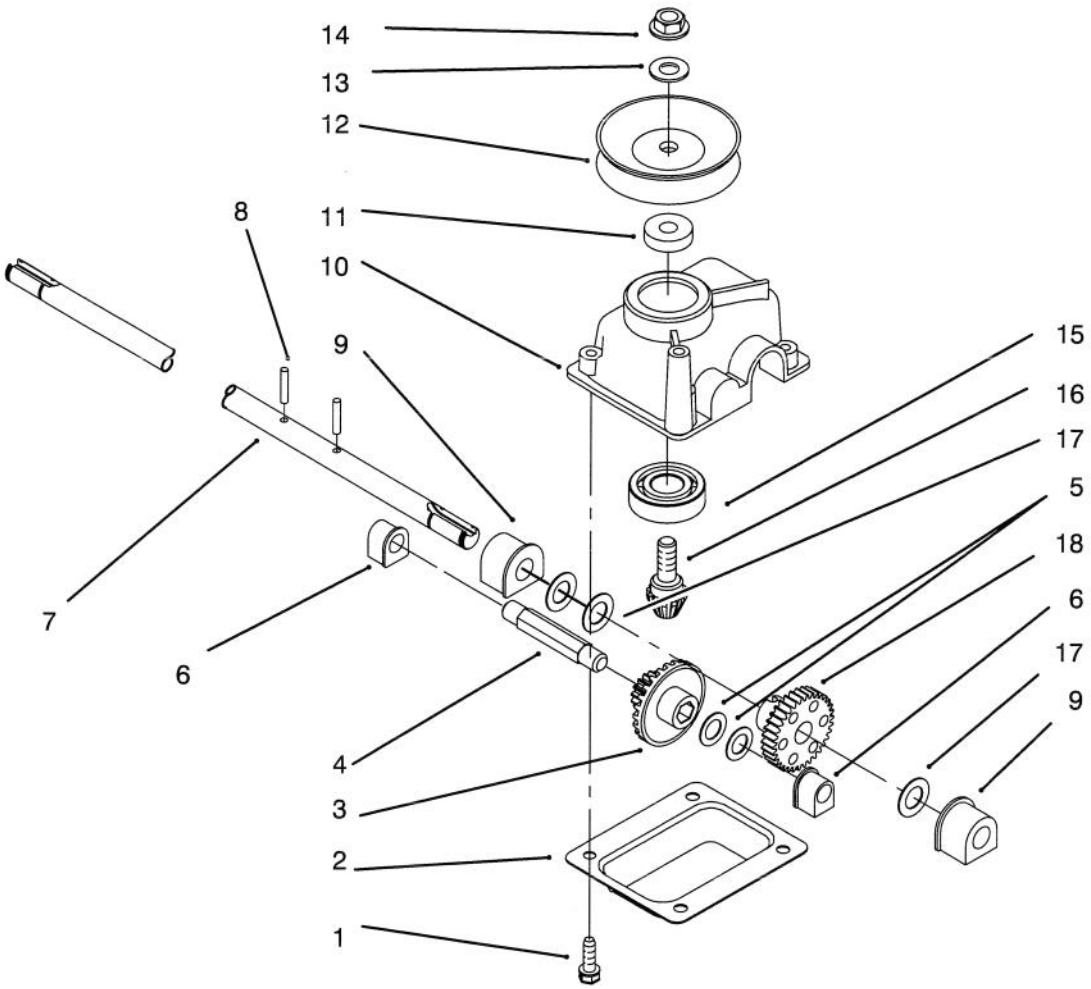

GEARCASE ASSEMBLY NO. 71–9600

Ref. No.	Part No.	Description	No. Used
1	49–2040	Screw – Taptite	4
2	614668	Cover – Gear Case	1
3	55–3760	Pinion – 15 Tooth	1
4	614696	Shaft – Intermediate	1
5	36–4791	Washer	2
6	60–8750	Bushing	2
7	71–9620	Shaft – Output	1
8	32121–114	Pin – Spirol	2
9	60–8850	Bushing – Output	2
10	614578	Gearcase	1

Ref. No.	Part No.	Description	No. Used
11	62–6660	Spacer	1
12	71–9610	Pulley – Half	2
13	3256–24	Washer	1
14	3296–5	Nut	1
15	38–7820	Bearing – Ball	1
16	60–8890	Gear – Bevel Pinion	1
17	36–4780	Washer – Thrust	3
18	614596	Gear 34 Tooth	1
*	71–9600	Gear Case Ass'y Complete	1

*Not Illustrated

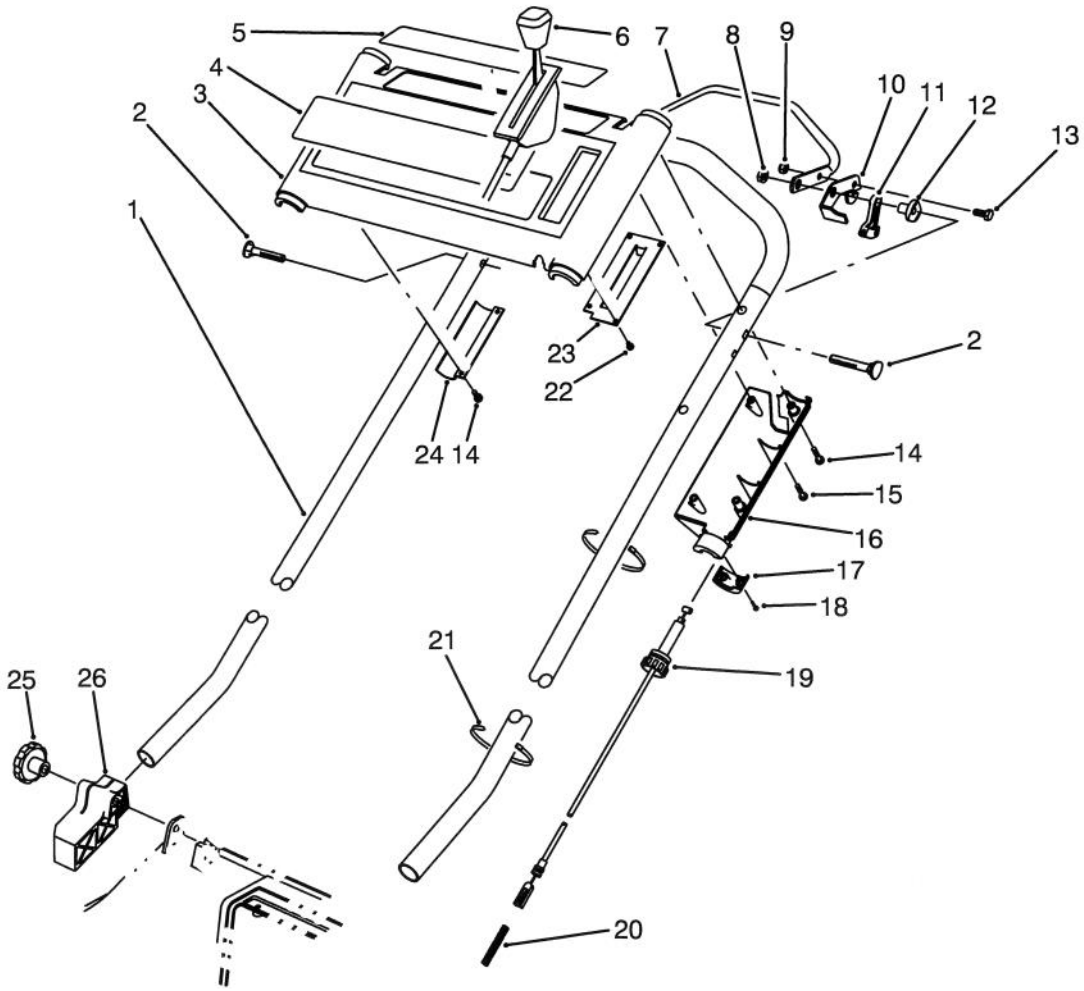

C–0367

S. P. HANDLE ASSEMBLY

Ref. No.	Part No.	Description	No. Used
1	71–9020	Handle	1
2	17–9426	Screw – Handle	2
3	16–1709	Panel – Control (Incl Ref. #4, & 5)	1
4	71–9863	Decal – TORO OHV	1
5	71–9865	Decal – Danger	1
6	71–8393	Control – Throttle Bend Type #1 Sheath Lg. 42.50 Wire Lg. 2 1/2	1
7	46–9900	Bar – Control	1
8	3296–29	Nut – Flange Lock	2
9	3296–42	Nut – Lock	1
10	46–8800	Lever – Control	1
11	46–5520	Lever – Traction	1
12	66–0330	Support – Spacer	2

Ref. No.	Part No.	Description	No. Used
13	321–3	Screw – Cap Hex. Hd.	1
14	32144–97	Screw – Thread Forming	5
15	32104–121	Screw – Thread Forming	1
16	71–7680	Cover – Throttle Lower	1
17	71–7630	Cap – Throttle Lower	1
18	32144–99	Screw – Thread Forming	2
19	71–8110	Cable – Traction	1
20	71–8310	Spring – Compression	1
21	3290–378	Tie – Cable	2
22	32144–98	Screw – Thread Forming	4
23	71–8040	Plate – Throttle	1
24	71–8130	Bracket – Panel	1
25	19–4050	Knob – Handle	2
26	71–8100	Mount – Handle R.H.	1
*	71–8090	Mount – Handle L.H.	1

*Not Illustrated

3316–133

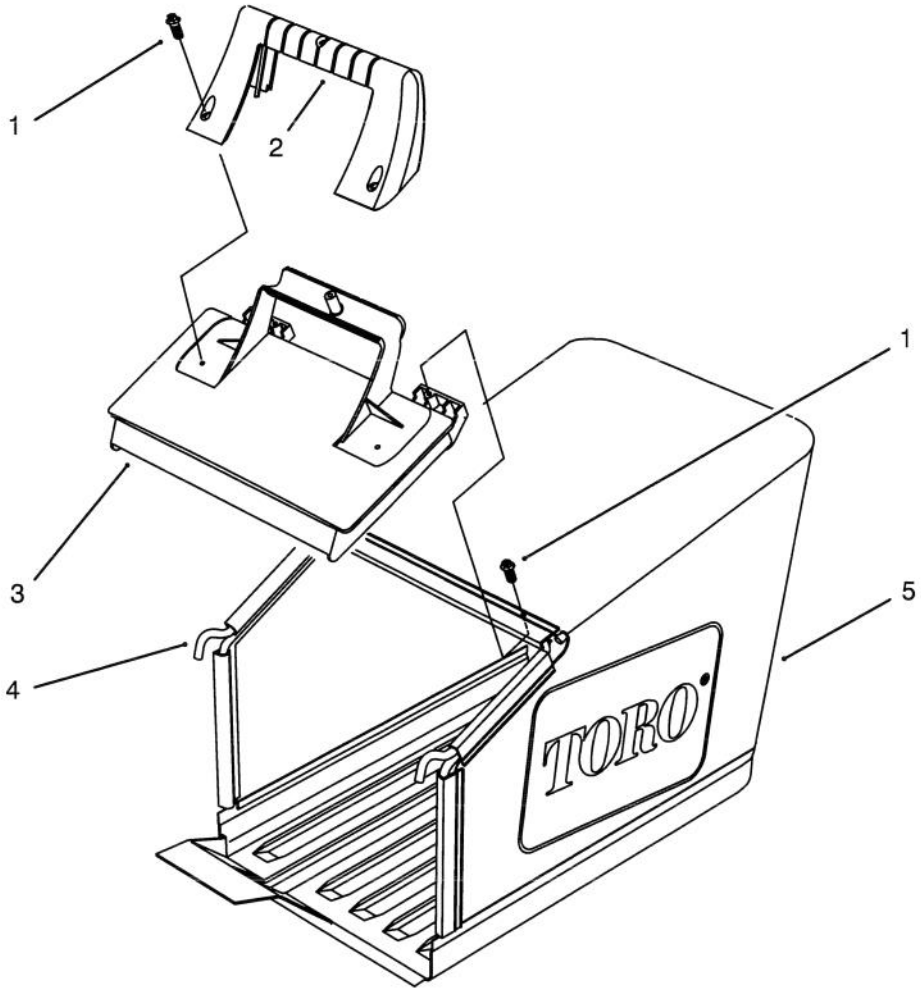

C–1509

GRASS BAG ASSEMBLY

Ref. No.	Part No.	Description	No. Used
1	32144–111	Screw – Hex Washer Hd Thr'd Form	5
2	71–9480	Handle – Door	1

Ref. No.	Part No.	Description	No. Used
3	71–9470	Door – Bag	1
4	71–9900	Frame – Bag	1
5	71–9460	Bag – Grass	1

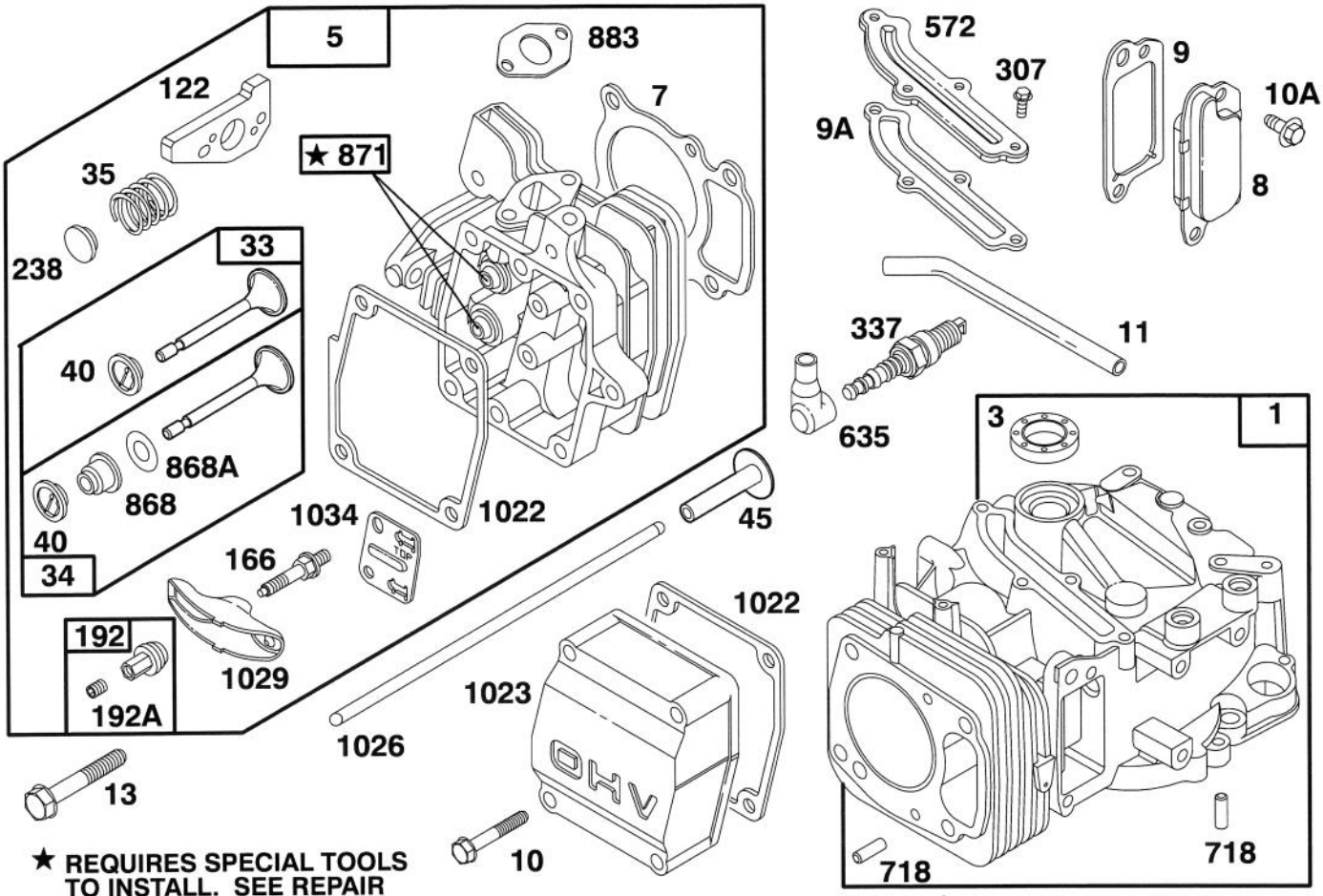

★ REQUIRES SPECIAL TOOLS TO INSTALL. SEE REPAIR INSTRUCTION MANUAL.

Assemblies include all parts shown in frames.

ENGINE GTS 150

Ref. No.	Part No.	Description	No. Used
1	77–7590	Cylinder Assy	1
*3	77–9060	Seal – Oil	1
5	77–7730	Head – Cylinder	1
*7	77–7740	Gasket – Cylinder Head	1
8	77–9260	Breather Assy	1
*9	77–9250	Gasket – Breather	1
*9A	77–7410	Gasket – Breather	1
10	77–7360	Screw – Hex Head (valve cover)	4
10A	77–9200	Screw – Hex Head	2
11	77–7350	Tube – Breather	1
13	77–7630	Screw – Cylinder Head	4
33	77–7860	Valve – Exhaust	1
34	77–7880	Valve – Intake	1
35	77–7810	Spring – Valve	2
40	77–7870	Retainer – Spring	2
45	77–7610	Tappet – Valve	2
†122	77–7820	Adapter Assy	1
166	77–7780	Stud – Rocker Arm	2
192	77–7910	Ball & Screw – Rocker Arm	2
192A	77–9090	Screw – Set	1
238	77–7800	Cap – Valve	2
307	77–7420	Screw – Cover Mtg (breather cover)	4

Ref. No.	Part No.	Description	No. Used
337	77–7330	Plug – Spark	1
572	77–7400	Cover – Breather	1
635	77–7340	Elbow – Spark Plug	1
718	77–7600	Pin – Cylinder	2
*868	77–7890	Seal Assy – Valve	1
*868A	77–7900	Gasket – Valve	1
871	77–7850	Bushing – Guide	1
*883	77–7760	Gasket – Exhaust	1
*1022	77–7320	Gasket – Rocker Cover	1
1023	77–7060	Cover – Valve	1
1026	77–7620	Rod – Push	2
1029	77–7790	Arm – Rocker	2
1034	77–7770	Guide – Push Rod	1
	77–9020	Short Block (Incl. Ref. # 1, 7, 9, 9A, 45, 122, 883, & 1022 pg. 9) (Incl. Ref. # 16, 18, 25, 28, 29, 46, 219, 230, 615, 616 979, & 1024 pg. 10) (Incl. Ref. # 63 pg. 12)	1

* Included in Gasket Set–Part No. 77–8900
†Included in Carburetor Overhaul Kit–Part No. 77–8920

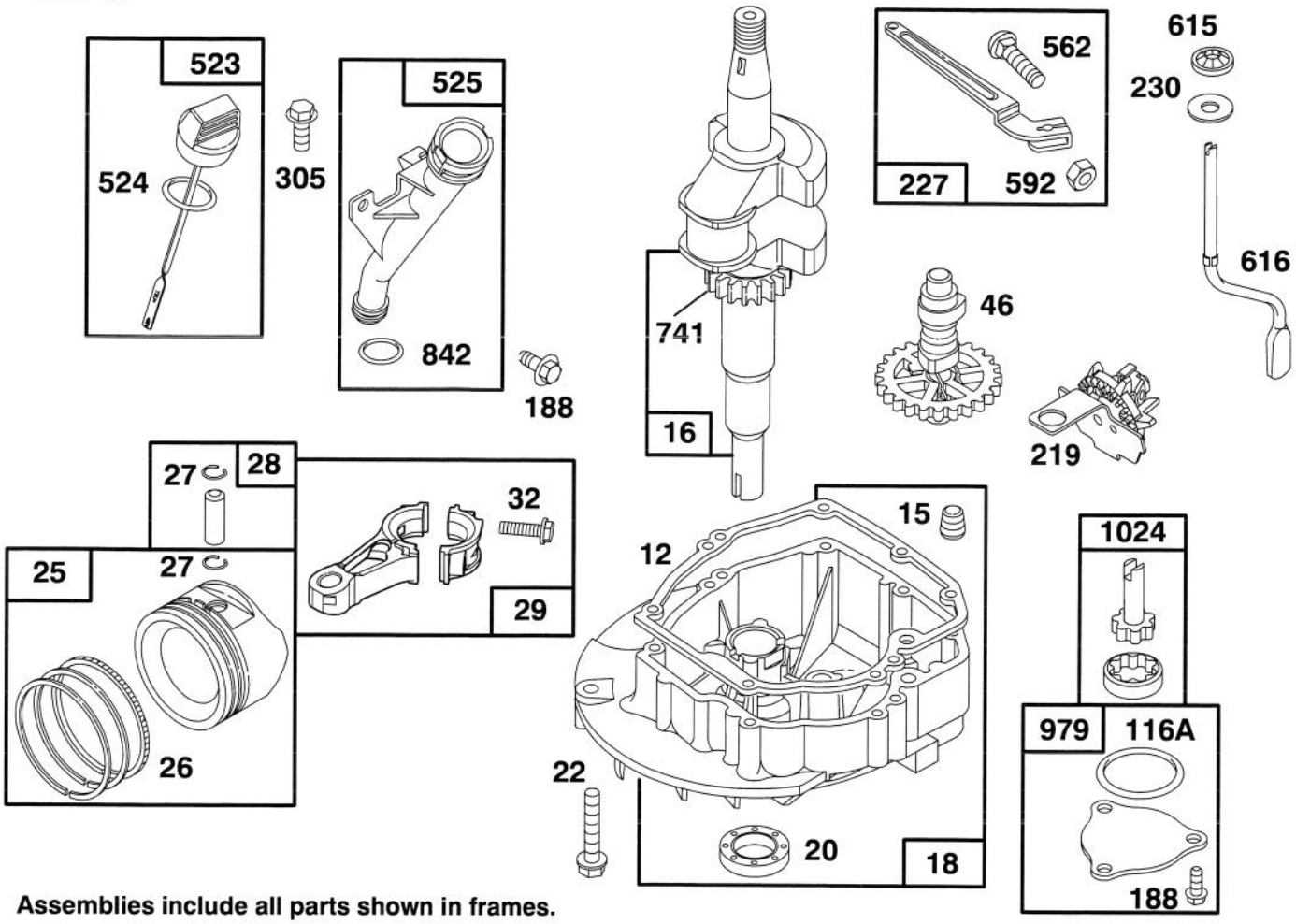

Assemblies include all parts shown in frames.

ENGINE GTS 150

Ref. No.	Part No.	Description	No. Used
*12	77–7550	Gasket – Engine Base	1
15	77–9240	Plug – Pipe	1
16	77–7520	Crankshaft	
		Note: Order Part No. 77–7540 For Timing Gear Key	1
18	77–7560	Base – Engine	1
*20	77–7570	Seal – Oil	1
22	77–9070	Screw– Engine Base	7
25	77–7690	Piston Assy (Std)	1
26	77–7700	Ring Set (Std)	1
27	77–7710	Lock – Piston Pin	2
28	77–7720	Pin Assy – Piston	1
29	77–7670	Rod – Connecting	1
32	77–7680	Screw – Connecting Rod	2
46	77–7490	Gear – Cam	1
*116A	77–7660	O–Ring	1

Ref. No.	Part No.	Description	No. Used
188	77–7450	Screw – Hex Head	5
219	77–7500	Gear – Governor	1
227	77–7370	Lever Assy – Governor	1
230	77–7470	Washer	1
305	77–8310	Screw – Hex Head	2
523	77–7260	Dipstick – Oil	1
*524	77–7270	Seal – O Ring	1
525	77–7280	Tube – Oil Filler	1
562	77–7380	Bolt – Governor Lever	1
592	77–7390	Nut – Hex	1
615	77–7480	Pushnut	1
616	77–7460	Crank – Governor	1
741	77–7530	Gear – Timing	1
*842	77–7300	Seal – O Ring	1
979	77–7650	Cover – Oil Pump	1
1024	77–7640	Pump – Oil	1

* Included in Gasket Set–Part No. 77–8900

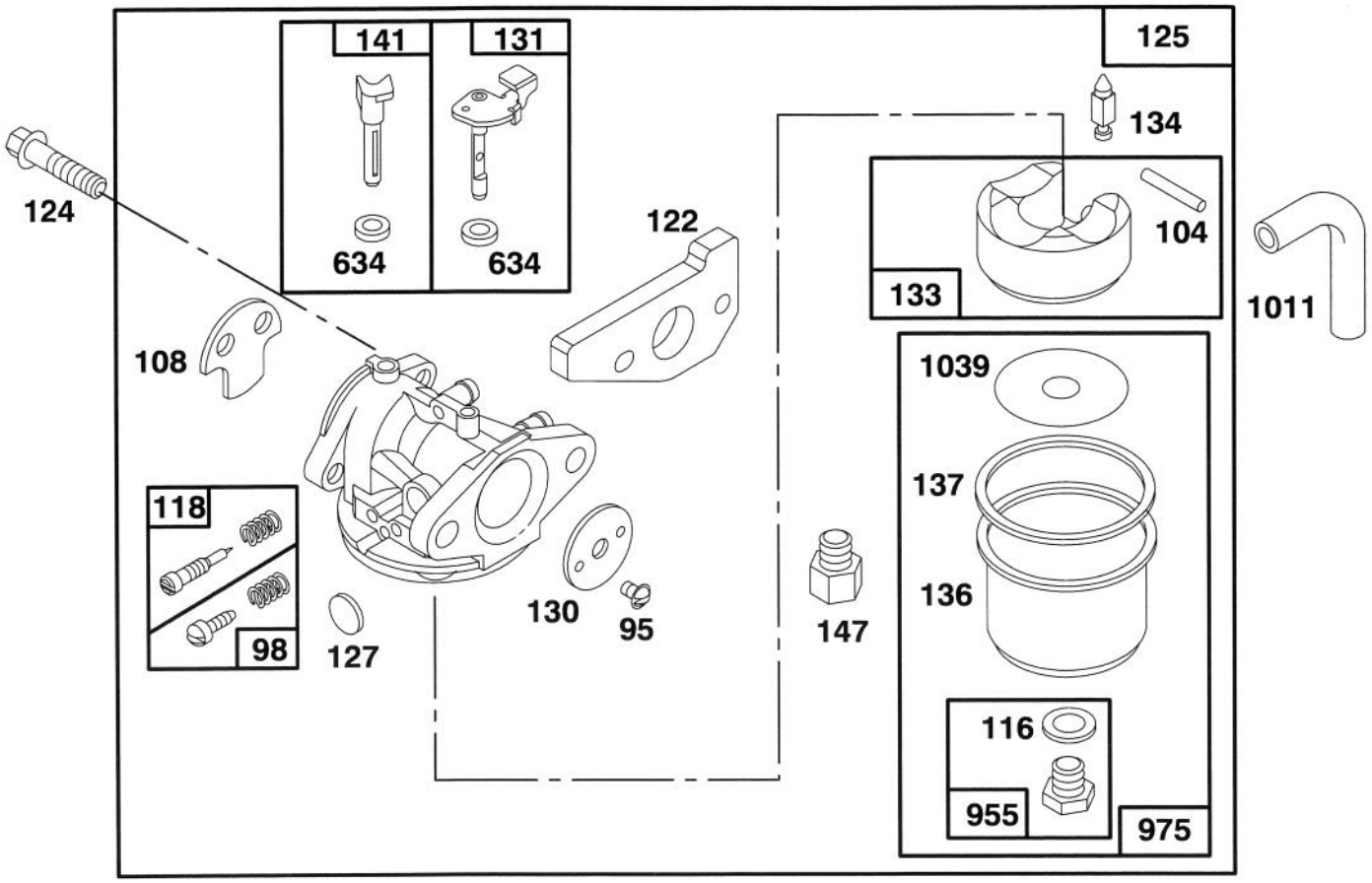

Assemblies include all parts shown in frames.

ENGINE GTS 150

Ref. No.	Part No.	Description	No. Used
95	77–8090	Screw – Valve Mtg	1
98	77–8240	Screw – Idle Adj	1
†104	77–8180	Pin – Float Hinge	1
108	77–8070	Valve – Choke	1
†‡116	77–8210	Sealing – Gasket	1
†118	77–8230	Valve & Spring – Needle	
†122	77–7820	Adapter Assy	1
124	77–7970	Screw – Hex Head (carb mtg)	2
125	77–8050	Carburetor Assy	1
†127	77–8100	Plug – Welch	1
130	77–8080	Valve – Throttle	1
131	77–8160	Shaft – Throttle	1
133	77–8170	Float – Carburetor	1

Ref. No.	Part No.	Description	No. Used
†134	77–8110	Valve – Inlet (Includes Seat)	1
136	77–7240	Bowl – Fuel	1
††137	77–8200	Gasket – Float Bowl	1
141	77–8130	Shaft – Choke	1
147	77–8120	Adapter – Jet	
		Note: For High Altitude Jet, Order Part No. 77–9000	1
‡634	77–8150	Washer – Seal	2
955	77–8220	Screw – Hex Head	1
975	77–8190	Bowl Assy – Carburetor	1
1011	77–8040	Tube – Vent	1
†1039	77–7250	Limiter – Float	1

† Included in Carburetor Overhaul Kit–Part No. 77–8920

‡ Included in Carburetor Gasket Kit–Part No. 77–8930

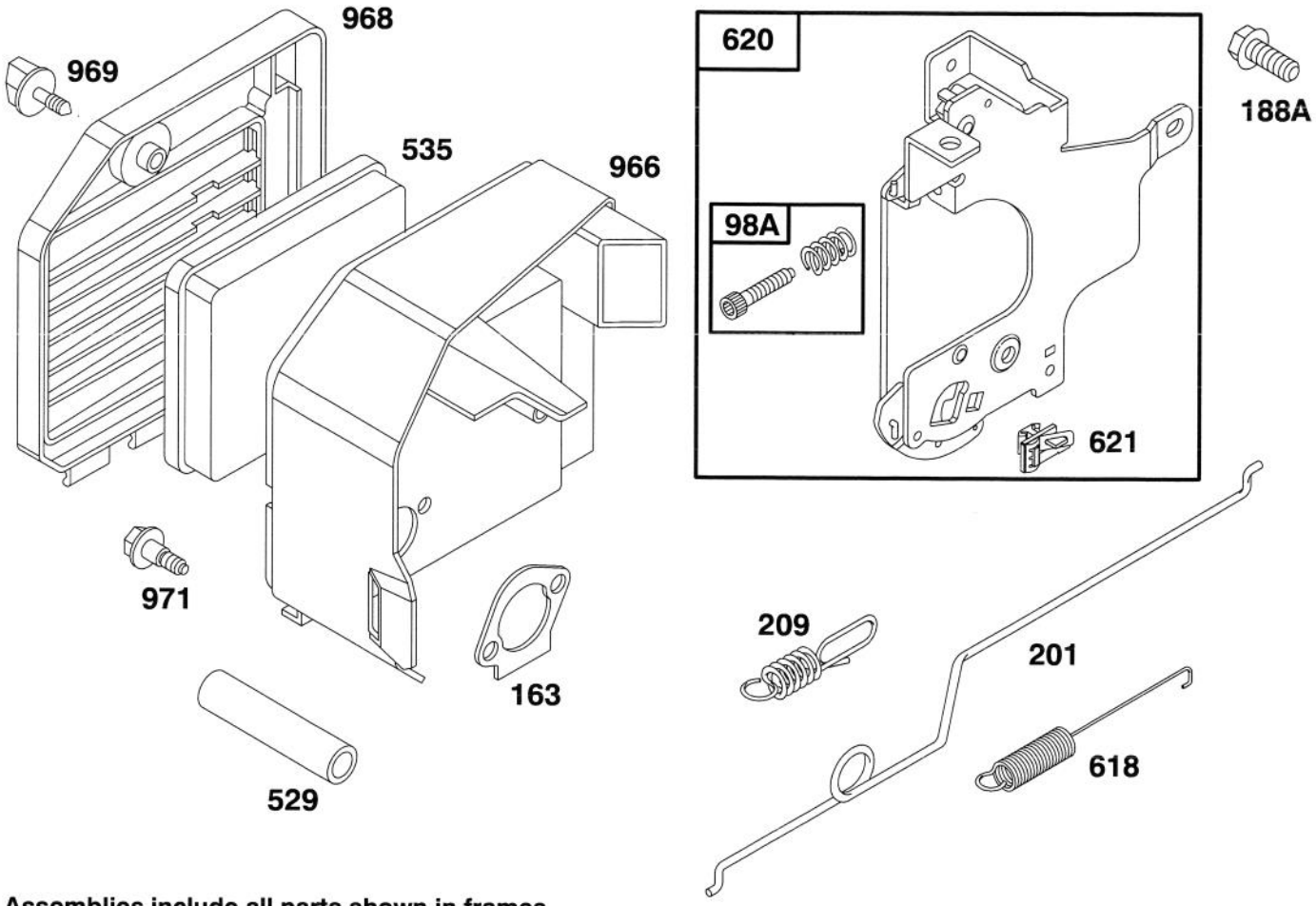

Assemblies include all parts shown in frames.

ENGINE GTS 150

Ref. No.	Part No.	Description	No. Used
98A	77–8020	Screw Assy – Speed Adj	1
*163	77–7960	Gasket – Air Cleaner	1
188A	77–9210	Screw – Hex Head	2
201	77–7980	Link – Governor	1
209	77–7990	Spring – Governor	1
529	77–8030	Tube – Breather	1
535	77–7950	Element – Filter	
		Note: 77–9010 Element – Paper (Optional)	1

Ref. No.	Part No.	Description	No. Used
618	77–8140	Spring – Choke	1
620	77–8000	Bracket – Carburetor	1
621	77–8010	Switch – Stop	1
966	77–7940	Base Air Cleaner	1
968	77–7040	Cover – Air Cleaner	1
969	77–7920	Screw – Air Cleaner	1
971	77–7930	Screw – Air Cleaner	3

* Included in Gasket Set–Part No. 77–8900

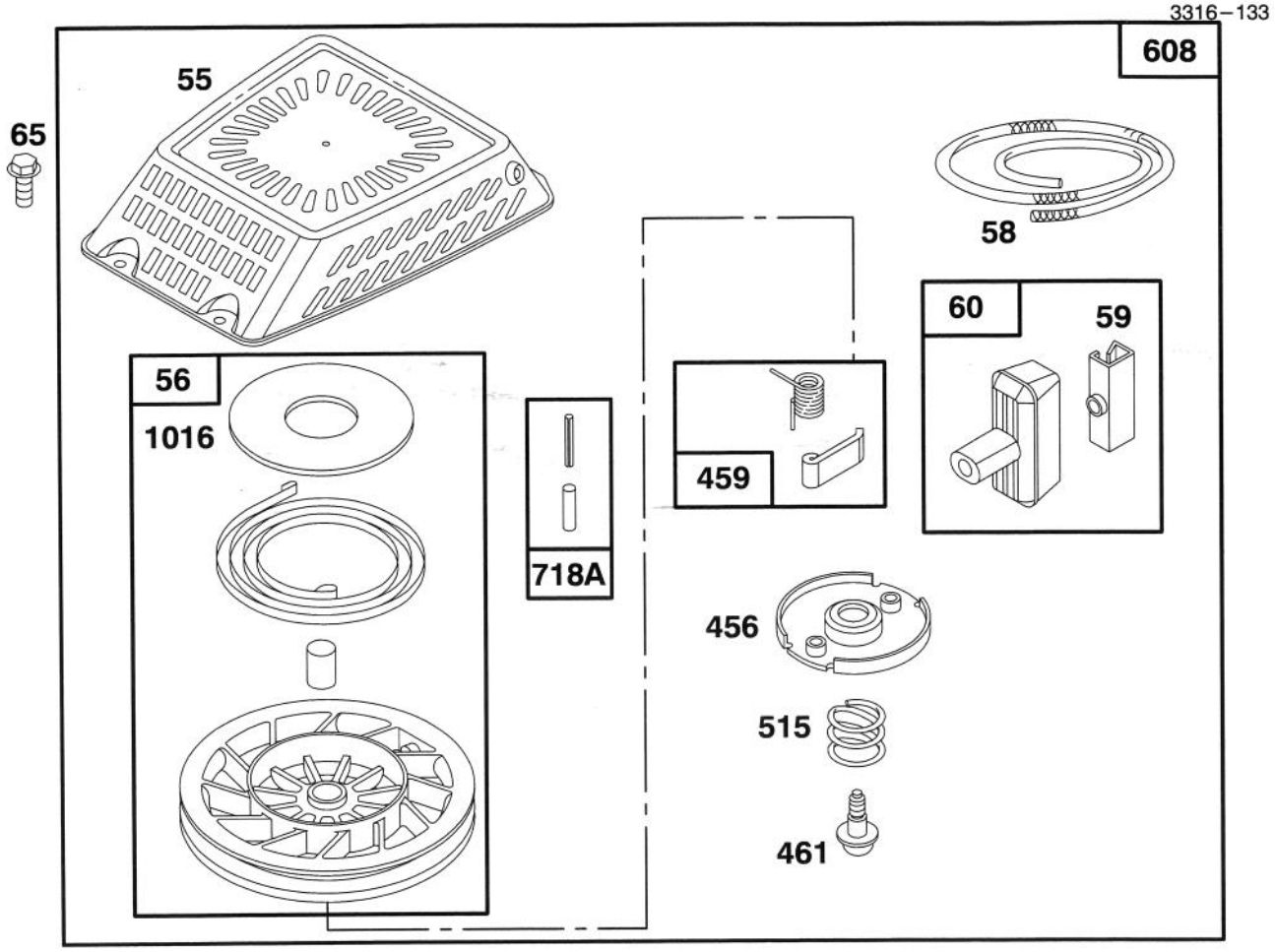

Assemblies include all parts shown in frames.

ENGINE GTS 150

Ref. No.	Part No.	Description	No. Used
55	77–8890	Housing – Rewind Starter	1
56	77–9270	Pulley – Rewind Starter	1
58	77–8480	Rope – Starter (Cut To Suit)	1
59	77–7210	Insert – Rewind Handle	1
60	77–8520	Handle – Rewind Starter	1
65	77–8300	Screw – Hex Head	4

Ref. No.	Part No.	Description	No. Used
456	77–8470	Retainer – Rewind Starter	1
459	77–8530	Pawl – Starter	2
461	77–8490	Screw – Rewind Starter	1
515	77–8500	Spring – Torsion	1
608	77–8840	Starter Assy – Rewind	1
718A	77–8550	Pin – Spring	1
1016	77–8570	Cover – Spring	1

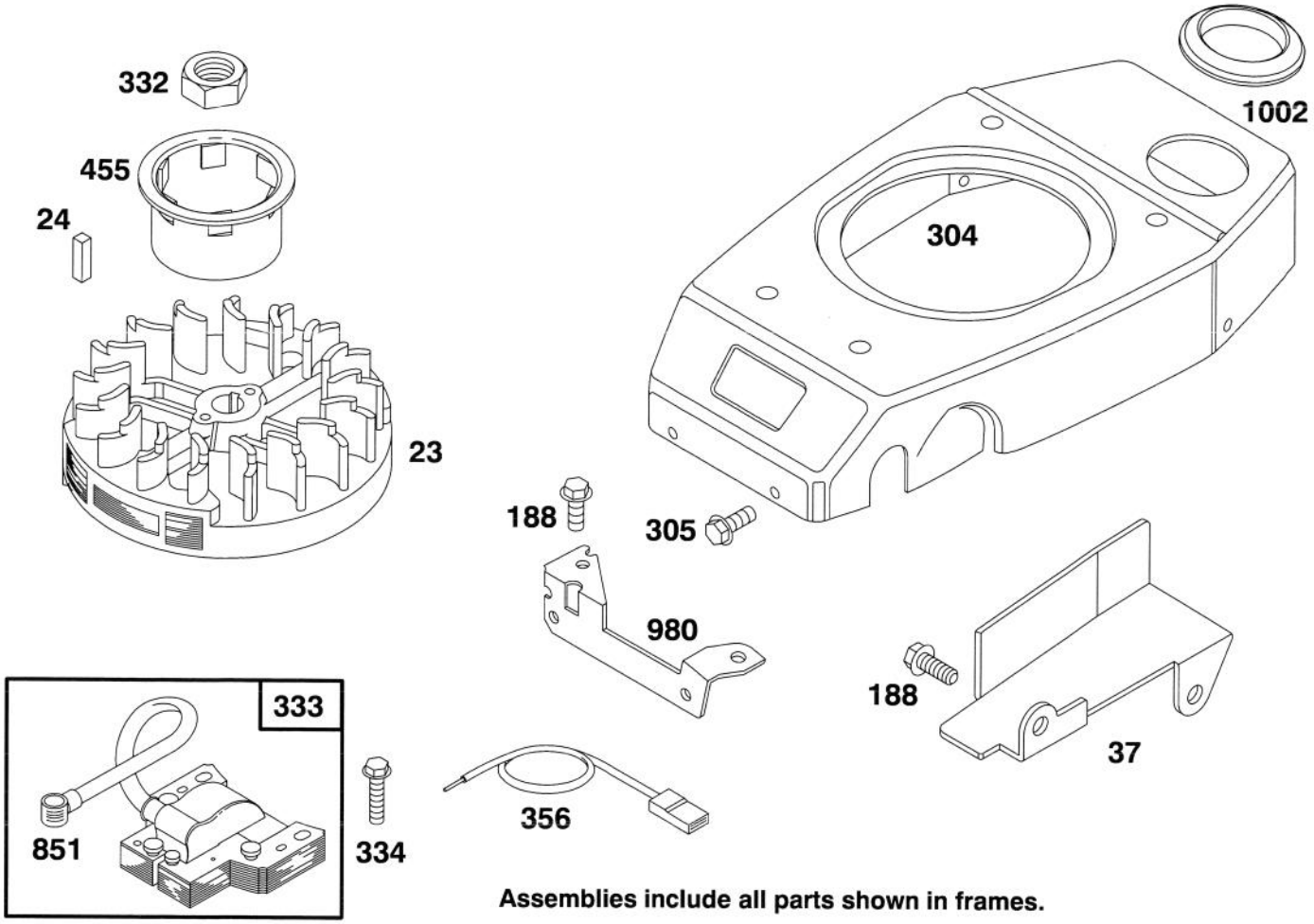

Assemblies include all parts shown in frames.

ENGINE GTS 150

Ref. No.	Part No.	Description	No. Used
23	77–8330	Flywheel – Magneto	1
24	77–8340	Key – Flywheel	1
37	77–7190	Guard – Flywheel	1
188	77–7450	Screw – Hex Head	2
304	77–8260	Housing – Blower	1
305	77–8310	Screw – Hex Head (blower hsg.)	4
332	77–8360	Nut – Flywheel	1

Ref. No.	Part No.	Description	No. Used
333	77–8420	Armature – Magneto	1
334	77–8440	Screw – Armature Mtg.	2
356	77–8400	Wire – Ground	1
455	77–8350	Cup – Starter	1
851	77–8430	Terminal – Spark Plug	1
980	77–7140	Bracket – Blower Housing	1
1002	77–7180	Grommet	1

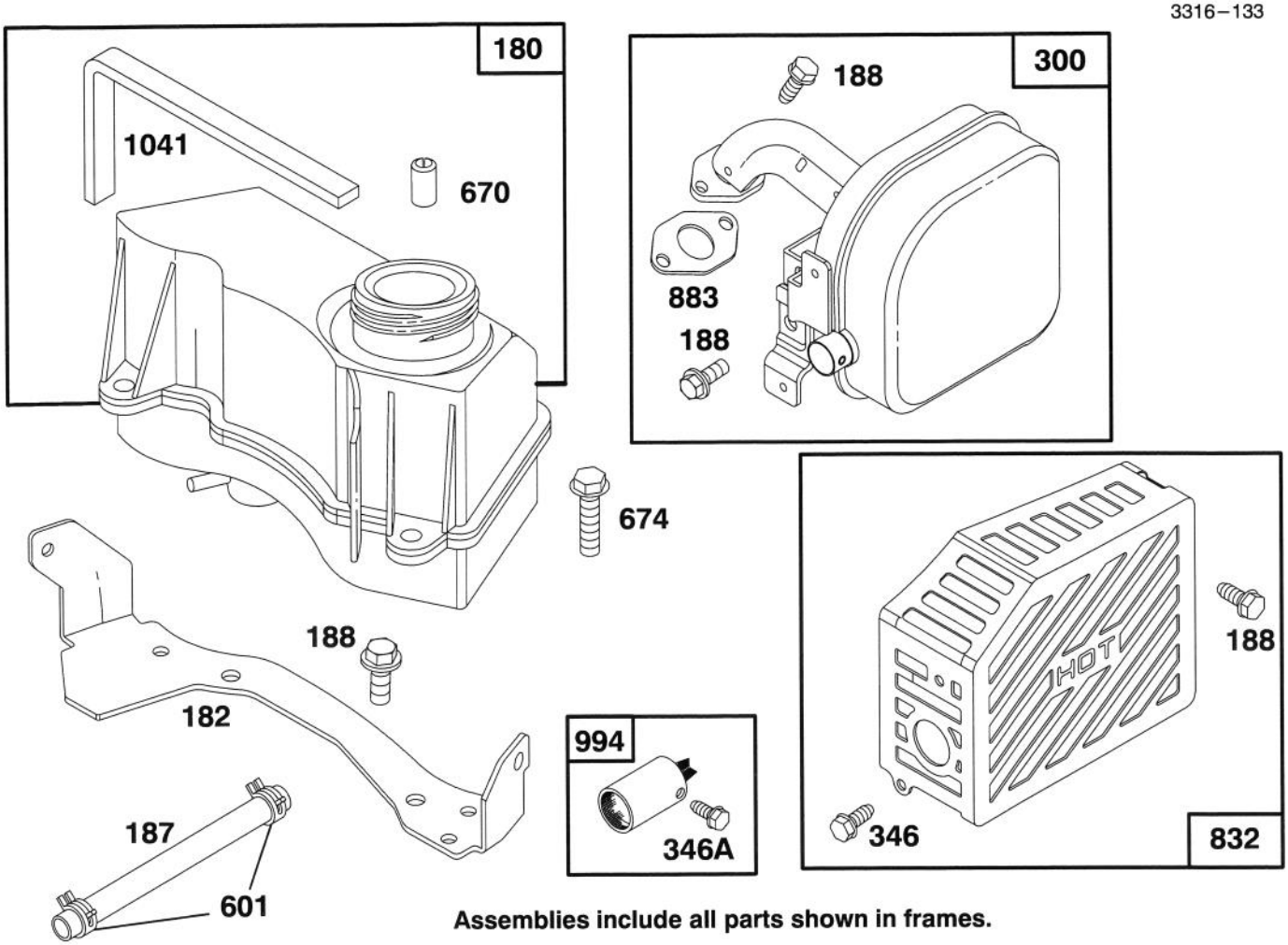

Assemblies include all parts shown in frames.

ENGINE GTS 150

Ref. No.	Part No.	Description	No. Used
180	77–8580	Tank Assy – Fuel	1
182	77–7170	Bracket – Fuel Tank	1
187	77–8620	Hose – Fuel (Cut To Suit)	1
188	77–7450	Screw – Hex Head	7
300	77–8640	Muffler – Exhaust	1
346	77–8650	Screw – Hex	2
346A	77–9050	Screw – Arrester Mtg.	1

Ref. No.	Part No.	Description	No. Used
601	77–8630	Clamp – Fuel Hose	2
670	77–9030	Spacer – Fuel Tank (includes 2)	1
674	77–8600	Screw – Tank Mtg	2
832	77–7290	Guard – Muffler	1
*883	77–7760	Gasket – Exhaust	1
994	77–9040	Arrester – Spark	1
*1041	77–8590	Seal – Foam	1

* Included in Gasket Set–Part No. 77–8900

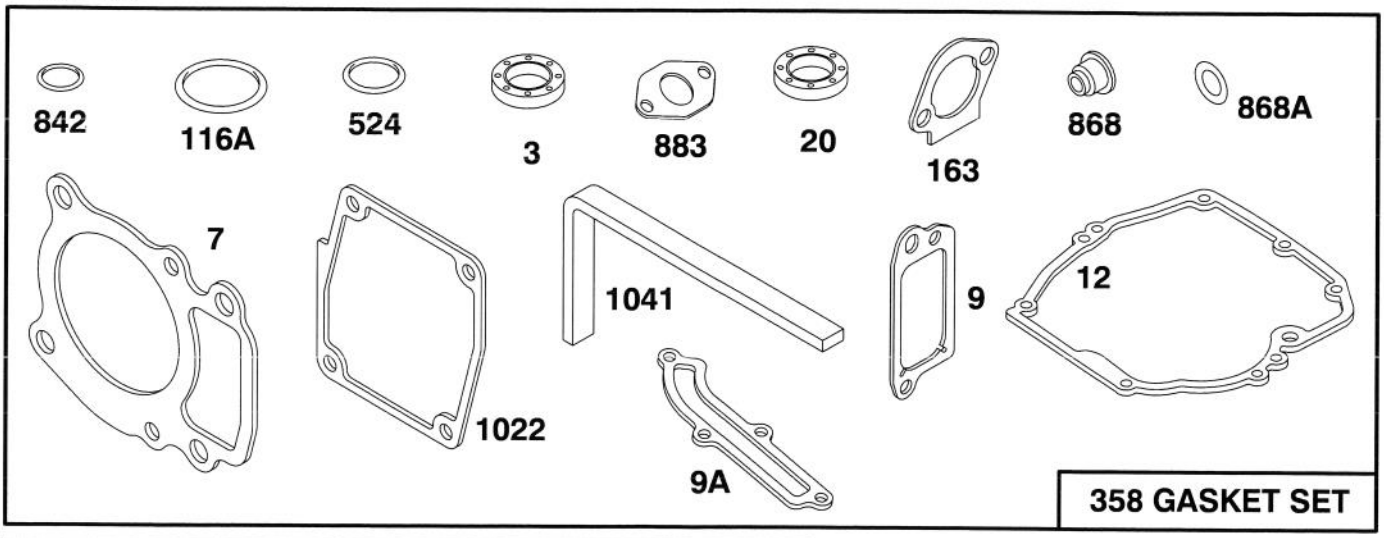

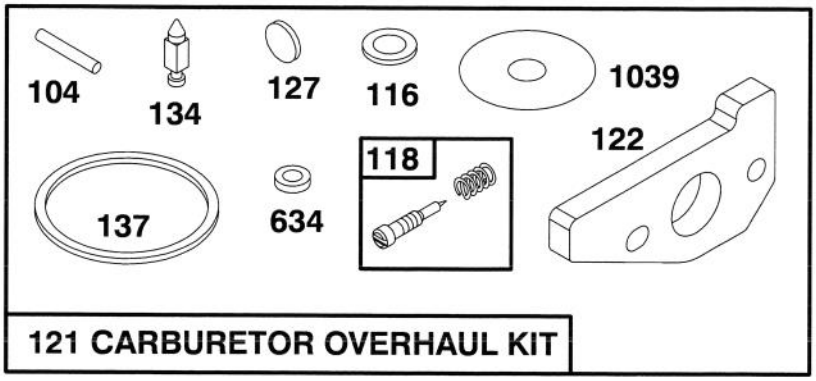

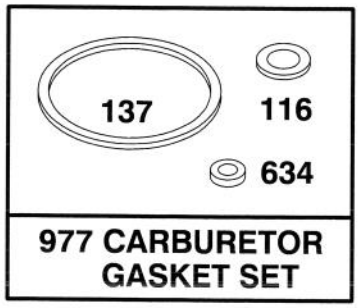

Assemblies include all parts shown in frames.

ENGINE GTS 150

Ref. No.	Part No.	Description	No. Used
*3	77–9060	Seal – Oil	1
*7	77–7740	Gasket – Cylinder Head	1
*9	77–9250	Gasket – Breather	1
*9A	77–7410	Gasket – Breather	1
*12	77–7550	Gasket – Engine Base	1
*20	77–7570	Seal – Oil	1
†104	77–8180	Pin – Float Hinge	1
†‡116	77–8210	Sealing – Gasket	1
*116A	77–7660	O–Ring	1
†118	77–8230	Valve & Spring – Needle	1
121	77–8920	Overhaul Kit – Carburetor	1
†122	77–7820	Adapter Assy.	1
†127	77–8100	Plug – Welch	1
†134	77–8110	Valve – Inlet (Includes Seat)	1

Ref. No.	Part No.	Description	No. Used
†‡137	77–8200	Gasket – Float Bowl	1
*163	77–7960	Gasket – Air Cleaner	1
358	77–8900	Gasket Set	1
*524	77–7270	Seal – O Ring	1
‡634	77–8150	Washer – Seal	2
*842	77–7300	Seal – O Ring	1
*868	77–7890	Seal Assy. – Valve	1
*868A	77–7900	Seal – Valve	1
*883	77–7760	Gasket – Exhaust	1
977	77–8930	Carburetor Gasket Set	1
*1022	77–7320	Gasket – Rocker Cover	1
†1039	77–7250	Limiter – Float	1
*1041	77–8590	Seal – Foam	1

* Included in Gasket Set–Part No. 77–8900 ‡ Included in Carburetor Gasket Kit–Part No. 77–8930
†Included in Carburetor Overhaul Kit–Part No. 77–8920

TORO PART NUMBER INDEX

Part No.	Description	Pg. No.	Ref. No.	Qty.
614578	Gearcase	4	10	1
614596	Gear 34 Tooth	4	18	1
614668	Cover – Gear Case	4	2	1
614696	Shaft – Intermediate	4	4	1
14–9959	Wheel, Tire & Gear Assy.	3	22	2
16–1669	Housing – 48cm	1	2	1
16–1709	Panel – Control	5	3	1
17–9426	Screw – Handle	5	2	2
19–4050	Knob – Handle	5	25	2
26–0672	Bolt – Blade	2	10	1
27–6230	Bolt – Wheel	3	23	2
27–6230	Bolt – Wheel	1	30	2
27–6250	Bushing – Wheel	3	24	4
27–6250	Bushing – Wheel	1	28	4
36–4780	Washer – Thrust	4	17	3
36–4791	Washer	4	5	2
38–7820	Bearing – Ball	4	15	1
40–1940	Washer – Wheel	1	27	2
46–1113	Wheel & Tire Assembly	1	29	2
46–5520	Lever – Traction	5	11	1
46–8800	Lever – Control	5	10	1
46–9900	Bar – Control	5	7	1
47–2890	Bushing – Sleeve	3	4	2
47–6730	Seal – Grease	3	5	2
48–2060	Bearing – Needle	3	14	2
49–2040	Screw – Taptite	4	1	4
55–3570	Cap – Gas	2	13	1
55–3760	Pinion – 15 Tooth	4	3	1
60–8750	Bushing	4	6	2
60–8850	Bushing – Output	4	9	2
60–8890	Gear – Bevel Pinion	4	16	1
62–3860	Decal – Danger	1	4	1
62–6660	Spacer	4	11	1
62–7550	Pulley – Driver	2	12	1
63–8590	Screw – Thread Forming	3	12	2
65–2720	Ring – Retaining	3	17	4
65–4710	Washer – Friction	3	15	2
65–4720	Spring – Compression	3	20	2
65–4740	Washer – Keyed Thrust	3	16	4
65–4750	Gear – Pinion	3	19	2
65–4760	Washer – Clutch	3	26	2
65–5210	Screw – Thread Forming	1	12	2
66–0330	Support – Spacer	5	12	2
66–0680	Decal – French Regulation	1	19	1
66–6040	Key – Rocking R.H.	3	*	1
66–6050	Key – Rocking L.H.	3	18	1
71–7630	Cap – Throttle Lower	5	17	1
71–7680	Cover – Throttle Lower	5	16	1
71–7740	Spring – Counterbalance	3	31	1
71–7770	Plate – Rear Securing	3	27	2
71–7820	Pivot – Front	1	25	1
71–7840	Rod – Trigger	3	8	1
71–7860	Grip – Upper	1	13	1
71–7870	Grip – Lower	1	6	1
71–7890	Guide – Belt Rear	1	21	1
71–7900	Cap – Hinge Bolt L.H.	1	16	1
71–7910	Cap – Hinge Bolt R.H.	1	11	1
71–7920	Cover – Belt	1	3	1
71–7930	Trigger – H.O.C.	1	7	1
71–7940	Retainer – Blade	2	6	1
71–7960	Guide – Engine Belt	2	11	1
71–7970	Rod – Link	3	30	1
71–7980	Indicator – H.O.C.	3	33	1
71–7990	Ramp – Discharge	1	22	1
71–8040	Plate – Throttle	5	23	1
71–8060	Spring – Trigger Return	3	10	2
71–8080	Saddle – H.O.C.	3	11	1
71–8090	Mount – Handle L.H.	5	*	1
71–8100	Mount – Handle R.H.	5	26	1
71–8110	Cable – Traction	5	19	1
71–8130	Bracket – Panel	5	24	1
71–8210	Blade – 48cm	2	7	1
71–8310	Spring – Compression	5	20	1
71–8393	Control – Throttle	5	6	1
71–8450	Cover – Spring	3	32	1
71–8580	Spacer – Door	1	20	2
71–8830	Retainer – Shaft	1	24	2
71–9020	Handle	5	1	1
71–9450	V– Belt	3	34	1
71–9460	Bag – Grass	6	5	1
71–9470	Door – Bag	6	3	1
71–9480	Handle – Door	6	2	1
71–9600	Gear Case Ass'y Complete	4	*	1
71–9600	Gearcase Assembly	3	35	1
71–9610	Pulley – Half	4	12	2
71–9620	Shaft – Output	4	7	1
71–9630	Bracket – Traction	3	36	1
71–9800	Door – Discharge	1	15	1
71–9810	Rear Pivot Assembly L.H.	3	6	1
71–9820	Rear Pivot Assembly R.H.	3	1	1
71–9840	Spring – Door	1	18	2
71–9850	Retainer – Belt	3	3	1
71–9860	Decal – 48cm	1	1	1
71–9863	Decal – TORO OHV	5	4	1
71–9865	Decal – Danger	5	5	1
71–9900	Frame – Bag	6	4	1
74–1660	Cover – Wheel	3	21	2
74–1670	Spacer – Wheel	3	25	2
77–7040	Cover – Air Cleaner	10	968	1
77–7060	Cover – Valve	7	1023	1
77–7140	Bracket – Blower Housing	12	980	1
77–7170	Bracket – Fuel Tank	13	182	1
77–7180	Grommet	12	1002	1
77–7190	Guard – Flywheel	12	37	1
77–7210	Insert – Rewind Handle	11	59	1
77–7240	Bowl – Fuel	9	136	1
77–7250	Limiter – Float	14	1039	1
77–7260	Dipstick – Oil	8	523	1
77–7270	Seal – O Ring	14	*524	1
77–7270	Seal – O Ring	8	*524	1
77–7280	Tube – Oil Filler	8	525	1
77–7290	Guard – Muffler	13	832	1
77–7300	Seal – O Ring	14	*842	1
77–7300	Seal – O Ring	8	*842	1
77–7320	Gasket – Rocker Cover	14	*1022	1
77–7320	Gasket – Rocker Cover	7	*1022	1
77–7330	Plug – Spark	7	337	1
77–7340	Elbow – Spark Plug	7	635	1
77–7350	Tube – Breather	7	11	1
77–7360	Screw – Hex Head	7	10	4
77–7370	Lever Assy – Governor	8	227	1
77–7380	Bolt – Governor Lever	8	562	1
77–7390	Nut – Hex	8	592	1
77–7400	Cover – Breather	7	572	1
77–7410	Gasket – Breather	14	*9A	1
77–7410	Gasket – Breather	7	*9A	1
77–7420	Screw – Cover Mtg	7	307	4
77–7450	Screw – Hex Head	12	188	2
77–7450	Screw – Hex Head	13	188	7
77–7450	Screw – Hex Head	8	188	5
77–7460	Crank – Governor	8	616	1
77–7470	Washer	8	230	1
77–7480	Pushnut	8	615	1
77–7490	Gear – Cam	8	46	1

*Not Illustrated

TORO PART NUMBER INDEX (Cont.)

Part No.	Description	Pg. No.	Ref. No.	Qty.
77–7500	Gear – Governor	8	219	1
77–7520	Crankshaft	8	16	1
77–7530	Gear – Timing	8	741	1
77–7550	Gasket – Engine Base	14	*12	1
77–7550	Gasket – Engine Base	8	*12	1
77–7560	Base – Engine	8	18	1
77–7570	Seal – Oil	14	*20	1
77–7570	Seal – Oil	8	*20	1
77–7590	Cylinder Assy	7	1	1
77–7600	Pin – Cylinder	7	718	2
77–7610	Tappet – Valve	7	45	2
77–7620	Rod – Push	7	1026	2
77–7630	Screw – Cylinder Head	7	13	4
77–7640	Pump – Oil	8	1024	1
77–7650	Cover – Oil Pump	8	979	1
77–7660	O–Ring	14	*116A	1
77–7660	O–Ring	8	*116A	1
77–7670	Rod – Connecting	8	29	1
77–7680	Screw – Connecting Rod	8	32	2
77–7690	Piston Assy (Std)	8	25	1
77–7700	Ring Set (Std)	8	26	1
77–7710	Lock – Piston Pin	8	27	1
77–7720	Pin Assy – Piston	8	28	1
77–7730	Head – Cylinder	7	5	1
77–7740	Gasket – Cylinder Head	14	*7	1
77–7740	Gasket – Cylinder Head	7	*7	1
77–7760	Gasket – Exhaust	14	*883	1
77–7760	Gasket – Exhaust	7	*883	1
77–7770	Guide – Push Rod	7	1034	1
77–7780	Stud – Rocker Arm	7	166	2
77–7790	Arm – Rocker	7	1029	2
77–7800	Cap – Valve	7	238	2
77–7810	Spring – Valve	7	35	1
77–7820	Adapter Assy	7	122	1
77–7820	Adapter Assy	9	122	1
77–7820	Adapter Assy.	14	122	1
77–7850	Bushing – Guide	7	871	1
77–7860	Valve – Exhaust	7	33	1
77–7870	Retainer – Spring	7	40	2
77–7880	Valve – Intake	7	34	1
77–7890	Seal Assy – Valve	7	*868	1
77–7890	Seal Assy. – Valve	14	*868	1
77–7900	Gasket – Valve	7	*868A	1
77–7900	Seal – Valve	14	*868A	1
77–7910	Ball & Screw – Rocker Arm	7	192	2
77–7920	Screw – Air Cleaner	10	969	1
77–7930	Screw – Air Cleaner	10	971	3
77–7940	Base Air Cleaner	10	966	1
77–7950	Element – Filter	10	535	1
77–7960	Gasket – Air Cleaner	10	*163	1
77–7960	Gasket – Air Cleaner	14	*163	1
77–7970	Screw – Hex Head	9	124	2
77–7980	Link – Governor	10	201	1
77–7990	Spring – Governor	10	209	1
77–8000	Bracket – Carburetor	10	620	1
77–8010	Switch – Stop	10	621	1
77–8020	Screw Assy – Speed Adj	10	98	1
77–8030	Tube – Breather	10	529	1
77–8040	Tube – Vent	9	1011	1
77–8050	Carburetor Assy	9	125	1
77–8070	Valve – Choke	9	108	1
77–8080	Valve – Throttle	9	130	1
77–8090	Screw – Valve Mtg	9	95	1
77–8100	Plug – Welch	14	127	1
77–8100	Plug – Welch	9	127	1
77–8110	Valve – Inlet	14	134	1
77–8110	Valve – Inlet	9	134	1
77–8120	Adapter – Jet	9	147	1
77–8130	Shaft – Choke	9	141	1
77–8140	Spring – Choke	10	618	1
77–8150	Washer – Seal	14	634	2
77–8150	Washer – Seal	9	634	2
77–8160	Shaft – Throttle	9	131	1
77–8170	Float – Carburetor	9	133	1
77–8180	Pin – Float Hinge	14	104	1
77–8180	Pin – Float Hinge	9	104	1
77–8190	Bowl Assy – Carburetor	9	975	1
77–8200	Gasket – Float	14	137	
77–8200	Gasket – Float	9	137	
77–8210	Sealing – Gasket	9	116	1
77–8220	Screw – Hex Head	9	955	1
77–8230	Valve & Spring – Needle	14	118	1
77–8230	Valve & Spring – Needle	9	118	
77–8240	Screw – Idle Adj	9	98	1
77–8260	Housing – Blower	12	304	1
77–8300	Screw – Hex Head	11	65	4
77–8310	Screw – Hex Head	12	305	1
77–8310	Screw – Hex Head	8	305	2
77–8330	Flywheel – Magneto	12	23	1
77–8340	Key – Flywheel	12	24	1
77–8350	Cup – Starter	12	455	1
77–8360	Nut – Flywheel	12	332	1
77–8400	Wire – Ground	12	356	1
77–8420	Armature – Magneto	12	333	1
77–8430	Terminal – Spark Plug	12	851	1
77–8440	Screw – Armature Mtg.	12	334	2
77–8470	Retainer – Rewind Starter	11	456	1
77–8480	Rope – Starter	11	58	1
77–8490	Screw – Rewind Starter	11	461	1
77–8500	Spring – Torsion	11	515	1
77–8520	Handle – Rewind Starter	11	60	1
77–8530	Pawl – Starter	11	459	1
77–8550	Pin – Spring	11	718A	1
77–8570	Cover – Spring	11	1016	1
77–8580	Tank Assy – Fuel	13	180	1
77–8590	Seal – Foam	13	*1041	1
77–8590	Seal – Foam	14	*1041	1
77–8600	Screw – Tank Mtg	13	674	2
77–8620	Hose – Fuel	13	187	1
77–8630	Clamp – Fuel Hose	13	601	2
77–8640	Muffler – Exhaust	13	300	1
77–8650	Screw – Hex	13	346	2
77–8840	Starter Assy – Rewind	11	608	1
77–8890	Housing – Rewind Starter	11	55	1
77–8900	Gasket Set	14	358	1
77–8920	Overhaul Kit – Carburetor	14	121	1
77–8930	Carburetor Gasket Set	14	977	1
77–9020	Short Block	7		1
77–9030	Spacer – Fuel Tank	13	670	1
77–9040	Arrester – Spark	13	994	1
77–9050	Screw – Arrester Mtg.	13	346A	1
77–9060	Seal – Oil	14	*3	1
77–9060	Seal – Oil	7	*3	1
77–9070	Screw– Engine Base	8	22	7
77–9090	Screw – Set	7	192A	1
77–9200	Screw – Hex Head	7	10A	2
77–9210	Screw – Hex Head	10	188A	2
77–9240	Plug – Pipe	8	15	1
77–9250	Gasket – Breather	14	*9	1
77–9250	Gasket – Breather	7	*9	1
77–9260	Breather Assy	7	8	1
77–9270	Pulley – Rewind Starter	11	56	1
80–2770	Cup – Anti–Scalp	2	8	1
80–4800	Decal – Recoil	2	3	1

*Not Illustrated

TORO PART NUMBER INDEX (Cont.)

Part No.	Description	Pg. No.	Ref. No.	Qty.
86–7990	Screw – Clamp	2	15	1
92–2289	Plate – Toro Logo	2	2	1
92–6528	Engine – Complete	2	1	1
2210–249	Clamp – Casing	2	14	1
302–26	Fitting – Grease	3	2	2
321–3	Screw – Cap Hex. Hd.	5	13	1
322–29	Screw – Cap Hex. Hd.	1	17	2
3253–22	Washer – Lock	2	9	1
3256–24	Washer	4	13	1
3284–5	Pin – Roll	1	8	1
3290–378	Tie – Cable	5	21	2
3296–5	Nut	4	14	1
3296–5	Nut – Lock	3	7	2
3296–5	Nut – Lock	1	26	2
3296–29	Nut – Flange Lock	5	8	2
3296–42	Nut – Lock	5	9	1
32104–121	Screw – Thread Forming	5	15	1
32112–11	Nut – Push	1	23	1
32112–13	Nut – Push	3	13	1
32121–114	Pin – Spirol	4	8	2
32144–4	Screw – Thread Forming	2	5	2
32144–4	Screw – Thread Forming	1	10	10
32144–4	Screw – Thread Forming	3	28	6
32144–31	Screw – Thread Forming	3	9	1
32144–70	Screw – Hex. Flange Hd.	1	5	1
32144–97	Screw – Thread Forming	1	14	2
32144–97	Screw – Thread Forming	5	14	5
32144–98	Screw – Thread Forming	5	22	4
32144–99	Screw – Thread Forming	5	18	2
32144–102	Screw – Thread Forming	2	4	3
32144–111	Screw – Hex Washer	6	1	5
32151–93	Ring – Grip	3	29	1

*Not Illustrated

PRODUCT CHANGES

In an effort to make improvements available to TORO owners as quickly as possible, minor changes are incorporated into Toro's products from time to time that do not become immediately shown in the Parts Catalog. If such a change has been made in your unit, which is not reflected in your manual, see your TORO Distributor or his Authorized TORO Service Dealer for information and part numbers.

COUNTRIES OTHER THAN THE UNITED STATES OR CANADA

Customers who have purchased TORO products exported from the United States or Canada should contact their Toro Distributor (Dealer) to obtain guarantee policies for your country, province or state. If for any reason you are dissatisfied with your Distributor's service or have difficulty obtaining guarantee information, contact the TORO importer. If all other remedies fail, you may contact us at The Toro Company.

MAINTENANCE RECORD

Date								

Compliance with Radio Interference Regulations Certified.
Certifie Conforme au Reglement sur le Brouillage Radioelectrique.

Litho in U.S.A.

MAINTENANCE RECORD

Date								

MAINTENANCE RECORD

Date								