FORM NO. 3316–134

TORO®

MODEL NO. 20928B–3900001 & UP

PARTS CATALOG

48cm REAR BAGGING MOWER

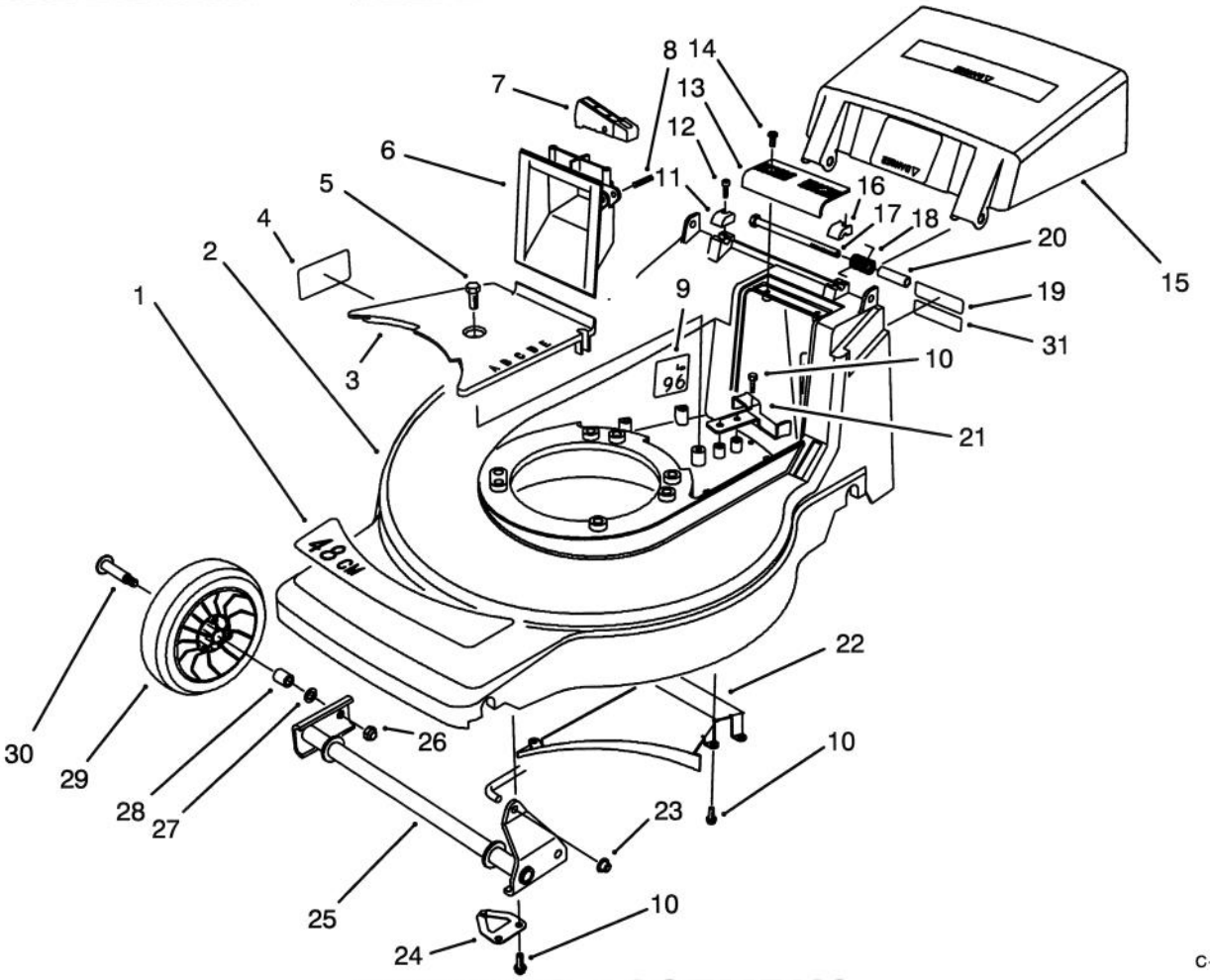

C–1515

HOUSING ASSEMBLY

Ref. No.	Part No.	Description	No. Used
1	71–9860	Decal – 48cm	1
2	16–1669	Housing – 48cm (Incl. Ref. #4)	1
3	71–7920	Cover – Belt	1
4	62–3860	Decal – Danger	1
5	32144–70	Screw – Hex. Flange Hd.	1
6	71–7870	Grip – Lower	1
7	71–7930	Trigger – H.O.C.	1
8	3284–5	Pin – Roll	1
9		Decal – Noise Rating	1
10	32144–4	Screw – Thread Forming	10
11	71–7910	Cap – Hinge Bolt R.H.	1
12	65–5210	Screw – Thread Forming	2
13	71–7860	Grip – Upper	1
14	32144–97	Screw – Thread Forming	2
15	71–9800	Door – Discharge	1
16	71–7900	Cap – Hinge Bolt L.H.	1

Ref. No.	Part No.	Description	No. Used
17	322–29	Screw – Cap Hex. Hd.	2
18	71–9840	Spring – Door	2
19	66–0680	Decal – French Regulation	1
20	71–8580	Spacer – Door	2
21	71–7890	Guide – Belt Rear	1
22	71–7990	Ramp – Discharge	1
23	32112–11	Nut – Push	1
24	71–8830	Retainer – Shaft	2
25	71–7820	Pivot – Front	1
26	3296–5	Nut – Lock	2
27	40–1940	Washer – Wheel	2
28	27–6250	Bushing – Wheel	4
29	46–1113	Wheel & Tire Assembly (Incl. Ref. #28)	2
30	27–6230	Bolt – Wheel	2
31		Decal – Power Rating	1

© The TORO Company – 1993
All Rights Reserved

TPS

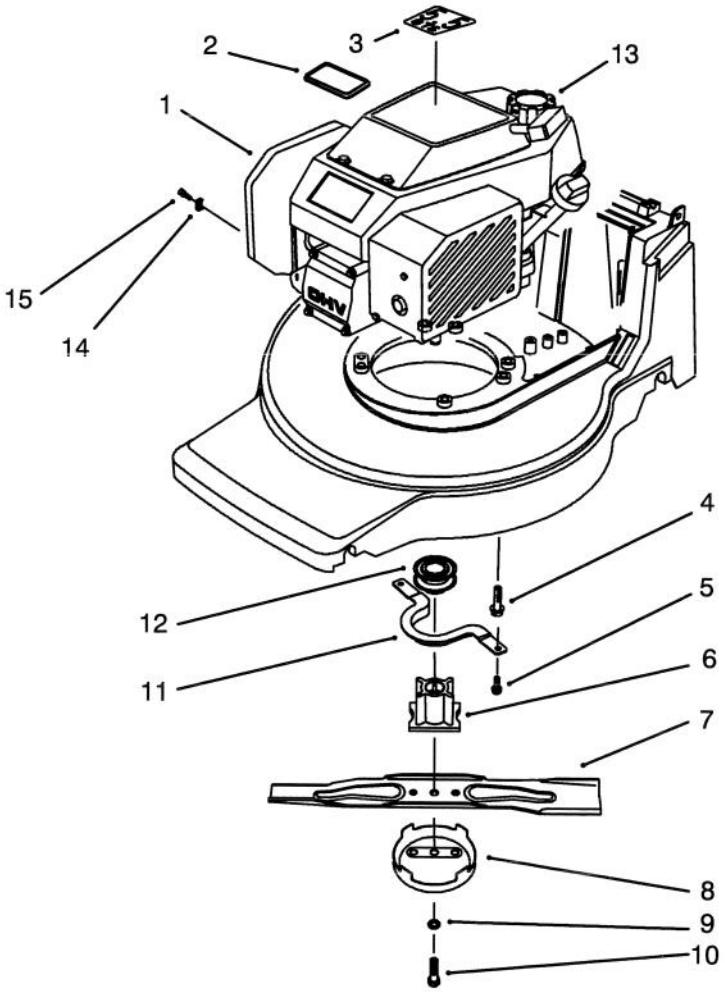

ENGINE ASSEMBLY

Ref. No.	Part No.	Description	No. Used
1	77–8950	Engine – Complete	1
2	92–2289	Plate – Toro Logo	1
3	80–4800	Decal – Recoil	1
4	32144–102	Screw – Thread Forming	3
5	32144–4	Screw – Thread Forming	2
6	71–7940	Retainer – Blade	1
7	71–8210	Blade – 48cm	1
8	80–2770	Cup – Anti–Scalp	1

Ref. No.	Part No.	Description	No. Used
9	3253–22	Washer – Lock	1
10	26–0672	Bolt – Blade	1
11	71–7960	Guide – Engine Belt	1
12	62–7550	Pulley – Driver	1
13	55–3570	Cap – Gas	1
14	2210–249	Clamp – Casing	1
15	86–7990	Screw – Clamp	1

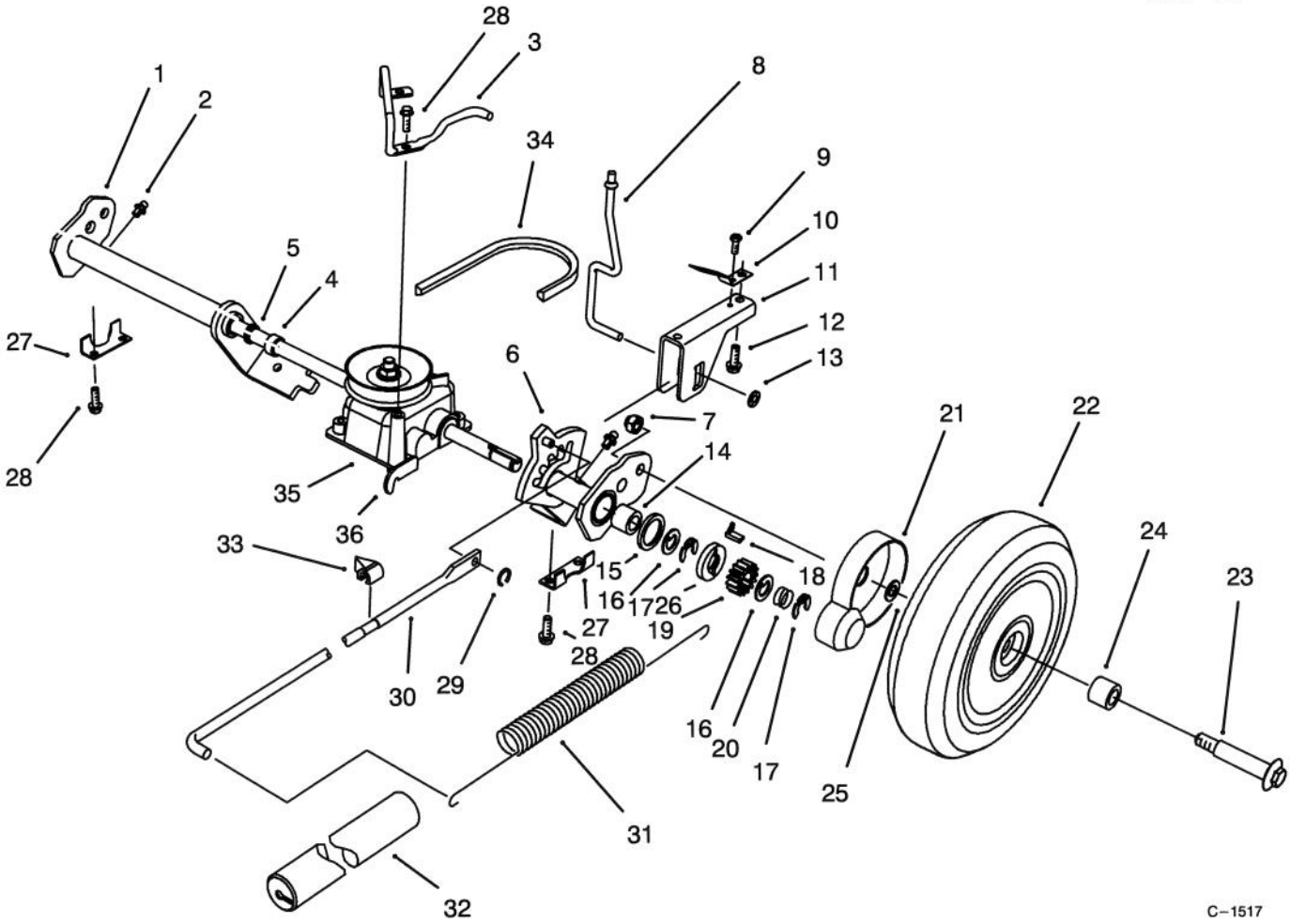

S. P. REAR AXLE ASSEMBLY

Ref. No.	Part No.	Description	No. Used
1	71–9820	Rear Pivot Assembly R.H. (Incl. Ref. #2, 4, 5 & 14)	1
2	302–26	Fitting – Grease	2
3	71–9850	Retainer Belt	1
4	47–2890	Bushing – Sleeve	2
5	47–6730	Seal – Grease	2
6	71–9810	Rear Pivot Assembly L.H. (Incl. Ref. #2, 4, 5 & 14)	1
7	3296–5	Nut – Lock	2
8	71–7840	Rod – Trigger	1
9	32144–31	Screw – Thread Forming	1
10	71–8060	Spring – Trigger Return	2
11	71–8080	Saddle – H.O.C.	1
12	63–8590	Screw – Thread Forming	2
13	32112–13	Nut – Push	1
14	48–2060	Bearing – Needle	2
15	65–4710	Washer – Friction	2
16	65–4740	Washer – Keyed Thrust	4
17	65–2720	Ring – Retaining	4
18	66–6050	Key – Rocking L.H.	1
*	66–6040	Key – Rocking R.H.	1

Ref. No.	Part No.	Description	No. Used
19	65–4750	Gear – Pinion	2
20	65–4720	Spring – Compression	2
21	74–1660	Cover – Wheel	2
22	14–9959	Wheel, Tire & Gear Assy. (Incl. Ref. #24)	2
23	27–6230	Bolt – Wheel	2
24	27–6250	Bushing – Wheel	4
25	74–1670	Spacer – Wheel	2
26	65–4760	Washer – Clutch	2
27	71–7770	Plate – Rear Securing	2
28	32144–4	Screw – Thread Forming	6
29	32151–93	Ring – Grip	1
30	71–7970	Rod – Link	1
31	71–7740	Spring – Counterbalance	1
32	71–8450	Cover – Spring	1
33	71–7980	Indicator – H.O.C.	1
34	71–9450	V–Belt	1
35	71–9600	Gearcase Assembly (Incl. Ref. #36)	1
36	71–9630	Bracket – Traction	1

*Not Illustrated

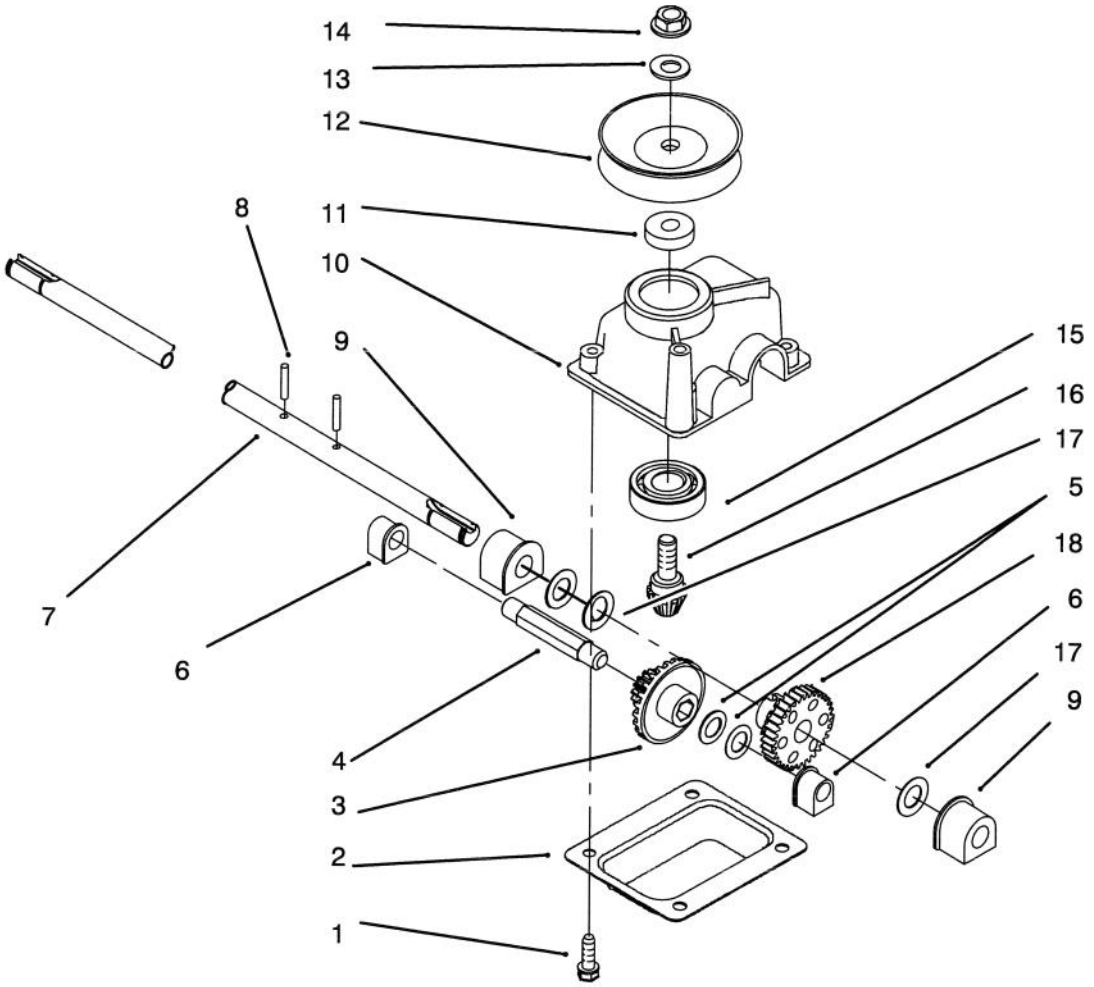

GEARCASE ASSEMBLY NO. 71–9600

Ref. No.	Part No.	Description	No. Used
1	49–2040	Screw – Taptite	4
2	614668	Cover – Gear Case	1
3	55–3760	Pinion – 15 Tooth	1
4	614696	Shaft – Intermediate	1
5	36–4791	Washer	2
6	60–8750	Bushing	2
7	71–9620	Shaft – Output	1
8	32121–114	Pin – Spirol	2
9	60–8850	Bushing – Output	2
10	614578	Gearcase	1

Ref. No.	Part No.	Description	No. Used
11	62–6660	Spacer	1
12	71–9610	Pulley – Half	2
13	3256–24	Washer	1
14	3296–5	Nut	1
15	38–7820	Bearing – Ball	1
16	60–8890	Gear – Bevel Pinion	1
17	36–4780	Washer – Thrust	3
18	614596	Gear 34 Tooth	1
*	71–9600	Gear Case Ass'y Complete	1

*Not Illustrated

3316–134

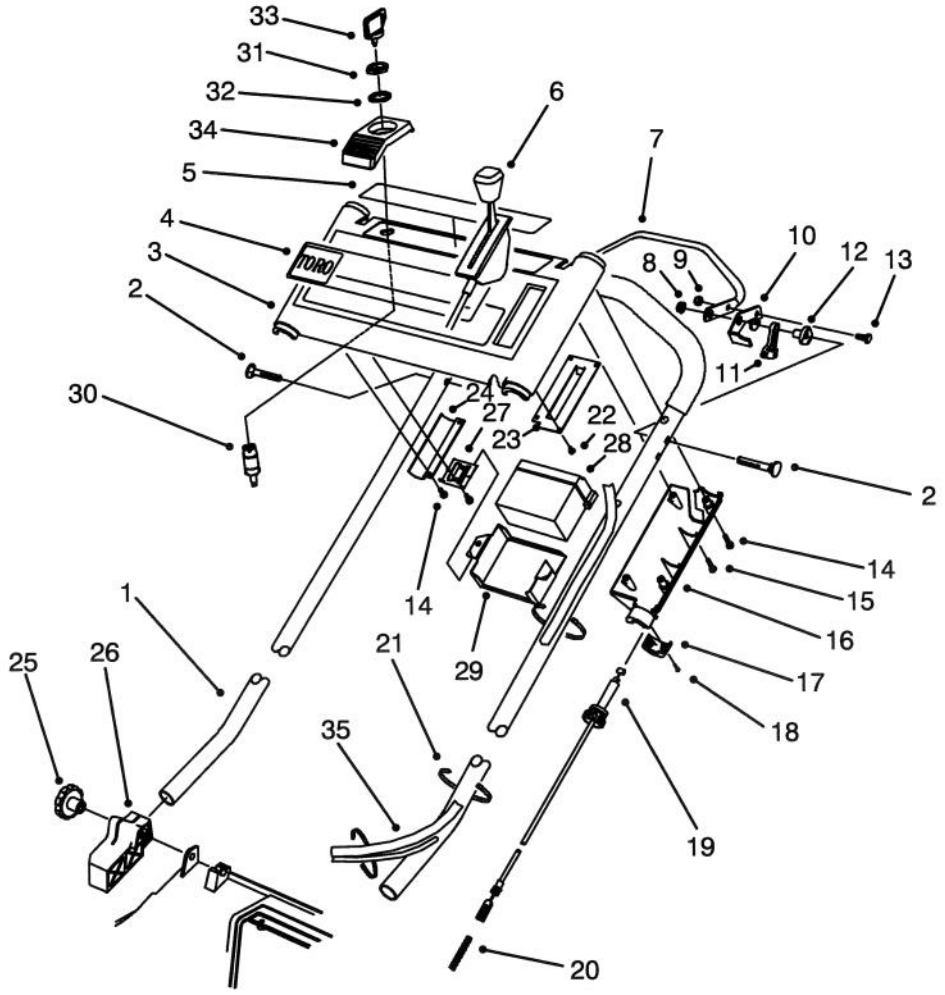

C–0517

S. P. HANDLE ASSEMBLY

Ref. No.	Part No.	Description	No. Used
1	71–9020	Handle	1
2	17–9426	Screw – Handle	2
3	16–1719	Panel – Control (Incl Ref. #4, & 5)	1
4	71–9864	Decal – TORO K.L.	1
5	71–9866	Decal – Danger	1
6	71–8393	Control – Throttle Bend Type #1 Sheath Lg. 42.50 Wire Lg. 2 1/2	1
7	46–9900	Bar – Control	1
8	3296–29	Nut – Flange Lock	2
9	3296–42	Nut – Lock	1
10	46–8800	Lever – Control	1
11	46–5520	Lever – Traction	1
12	66–0330	Support – Spacer	2
13	321–3	Screw – Cap Hex. Hd.	1
14	32144–97	Screw – Thread Forming	9
15	32104–121	Screw – Thread Forming	1
16	71–7680	Cover – Throttle Lower	1
17	71–7630	Cap – Throttle Lower	1

Ref. No.	Part No.	Description	No. Used
18	32144–99	Screw – Thread Forming	2
19	71–8110	Cable – Traction	1
20	71–8310	Spring – Compression	1
21	3290–378	Tie – Cable	3
22	32144–98	Screw – Thread Forming	4
23	71–8040	Plate – Throttle	1
24	71–8130	Bracket – Panel	1
25	19–4050	Knob – Handle	2
26	71–8100	Mount – Handle R.H.	1
*	71–8090	Mount – Handle L.H.	1
27	71–8280	Bracket – Battery	2
28	63–8570	Battery Ass'y	1
29	63–8480	Retainer – Battery	1
30	46–5780	Switch – Starter (Incl. Ref. #31, & 32)	1
31	218–461	Nut – Lock	1
32	3254–5	Washer – Lock	1
33	63–8360	Key – Ignition	1
34	71–8200	Bracket – Ignition Switch	1
35	80–4791	Wire Harness	1
*	22–4710	Charger – Battery	1

*Not Illustrated

ENGINE GTS–150

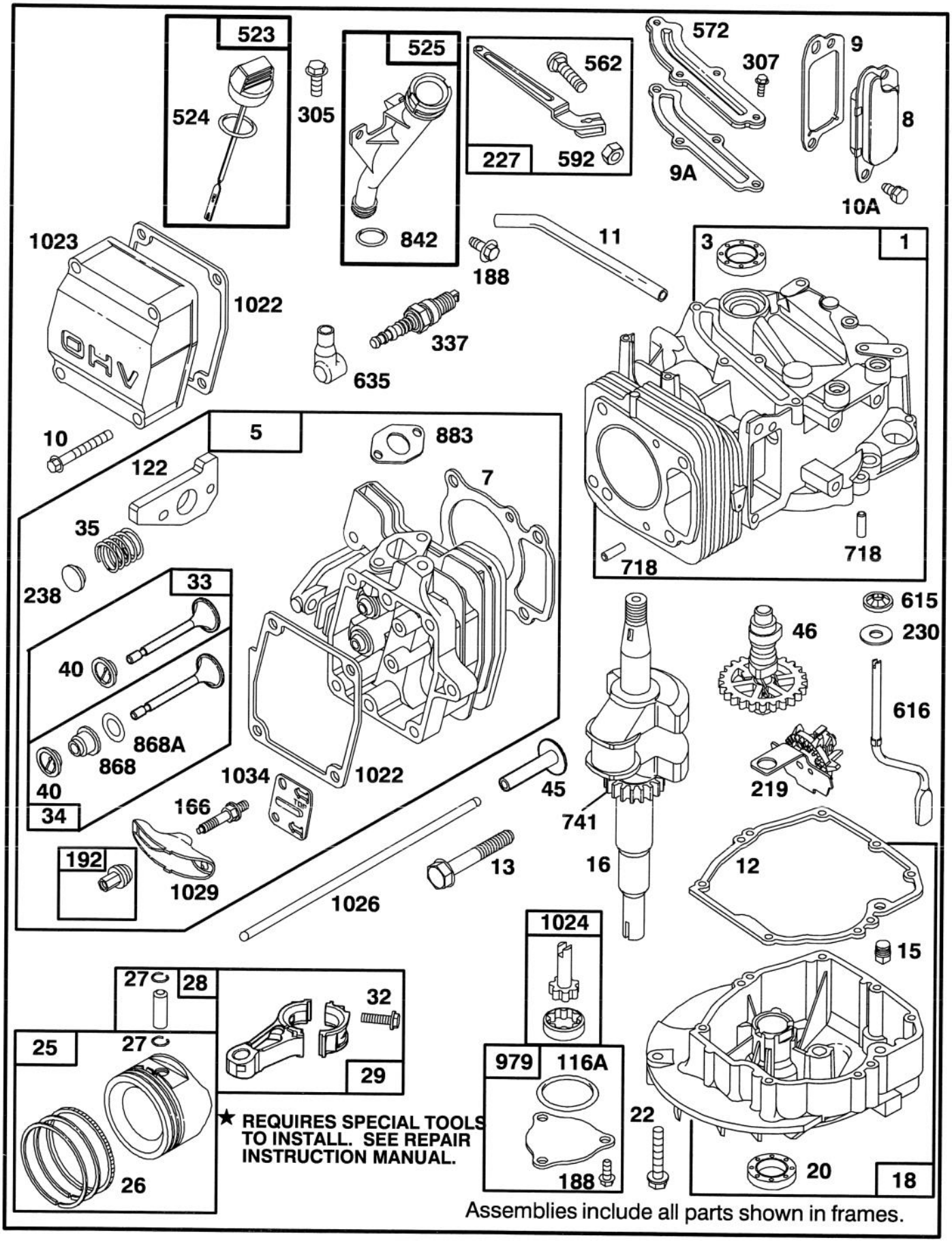

ENGINE GTS–150

Ref. No.	Part No.	Description	No. Used
1	77–7590	Cylinder Assy.	1
*3	77–9060	Seal – Oil	1
5	77–7730	Head – Cylinder	1
*7	77–7740	Gasket – Cylinder Head	1
8	77–9260	Breather Valve	1
*9	77–9250	Gasket – Breather	1
*9A	77–7410	Gasket – Breather	1
10	77–7360	Screw – Hex. Head (valve cover)	4
10A	77–9200	Screw – Hex Hd.	2
11	77–7350	Tube – Breather	1
*12	77–7550	Gasket – Engine Base	1
13	77–7630	Screw – Cylinder Head	4
15	77–9240	Plug – Pipe	1
16	77–7520	Crankshaft Note: Order Part No. 77–7540 For Timing Gear Key	1
18	77–7560	Base – Engine	1
*20	77–7570	Seal – Oil	1
22	77–9070	Screw – Engine Base Note: Order Part No. 77–9080 For Hole Nearest Breather	7
25	77–7690	Piston Assy. (Std.)	1
26	77–7700	Ring Set (Std.)	1
27	77–7710	Lock – Piston Pin	2
28	77–7720	Pin – Piston (STD)	1
29	77–7670	Rod – Connecting	1
32	77–7680	Screw – Connecting Rod	2
33	77–7860	Valve – Exhaust	1
34	77–7880	Valve – Intake	1
35	77–7810	Spring – Valve	2
40	77–7870	Retainer – Spring	2
45	77–7610	Tappet – Valve	2
46	77–7490	Gear – Cam	1
*116A	77–7660	Seal – O Ring	1
†122	77–7820	Adapter Assy.	1
166	77–7780	Stud – Rocker Arm	2
188	77–7450	Screw – Sem (Breather Mounting, pump cover)	5
192	77–7910	Nut – Hex Special	2
219	77–7500	Gear – Governor	1
227	77–7370	Lever – Governor	1
230	77–7470	Washer – Thrust	1
238	77–7800	Cap – Valve	2
305	77–8310	Screw – Hex. Head	2
307	77–7420	Screw – Sem (Breather Cover)	4
337	77–7330	Plug – Spark	1
523	77–7260	Dipstick – Oil	1
*524	77–7270	Seal – Intake Elbow	1
525	77–7280	Tube – Oil Filler	1
562	77–7380	Bolt – Governor Lever	1
572	77–7400	Baffle – Cylinder	1
592	77–7390	Nut – Hex.	1
615	77–7480	Push Nut	1
616	77–7460	Crank – Governor	1
635	77–7340	Elbow – Spark Plug	1
718	77–7600	Dowel – Sleeve	2
741	77–7530	Gear – Timing	1
*842	77–7300	Seal – O Ring	1
*868	77–7890	Seal Assy. – Valve	1
*868A	77–7900	Gasket – Valve	1
*883	77–7760	Gasket – Exhaust	1
979	77–7650	Cover – Oil Pump	1
*1022	77–7320	Gasket – Rocker Cover	1
1023	77–7060	Cover – Valve	1
1024	77–7640	Pump – Oil	1
1026	77–7620	Rod – Push	2
1029	77–7790	Arm – VLV Rocker	2
1034	77–7770	Guide – Push Rod	1
	77–9020	Short Block (Incl. Ref. #1, 7, 9, 9A, 16, 18, 25, 28, 29, 45, 46, 122, 219, 230, 615, 616, 883, 979, 1022, 1024 pg. 6) (Incl. Ref. #163 pg. 8)	1

*Included in Gasket Set
†Included in Carburetor Overhaul Kit

ENGINE GTS–150

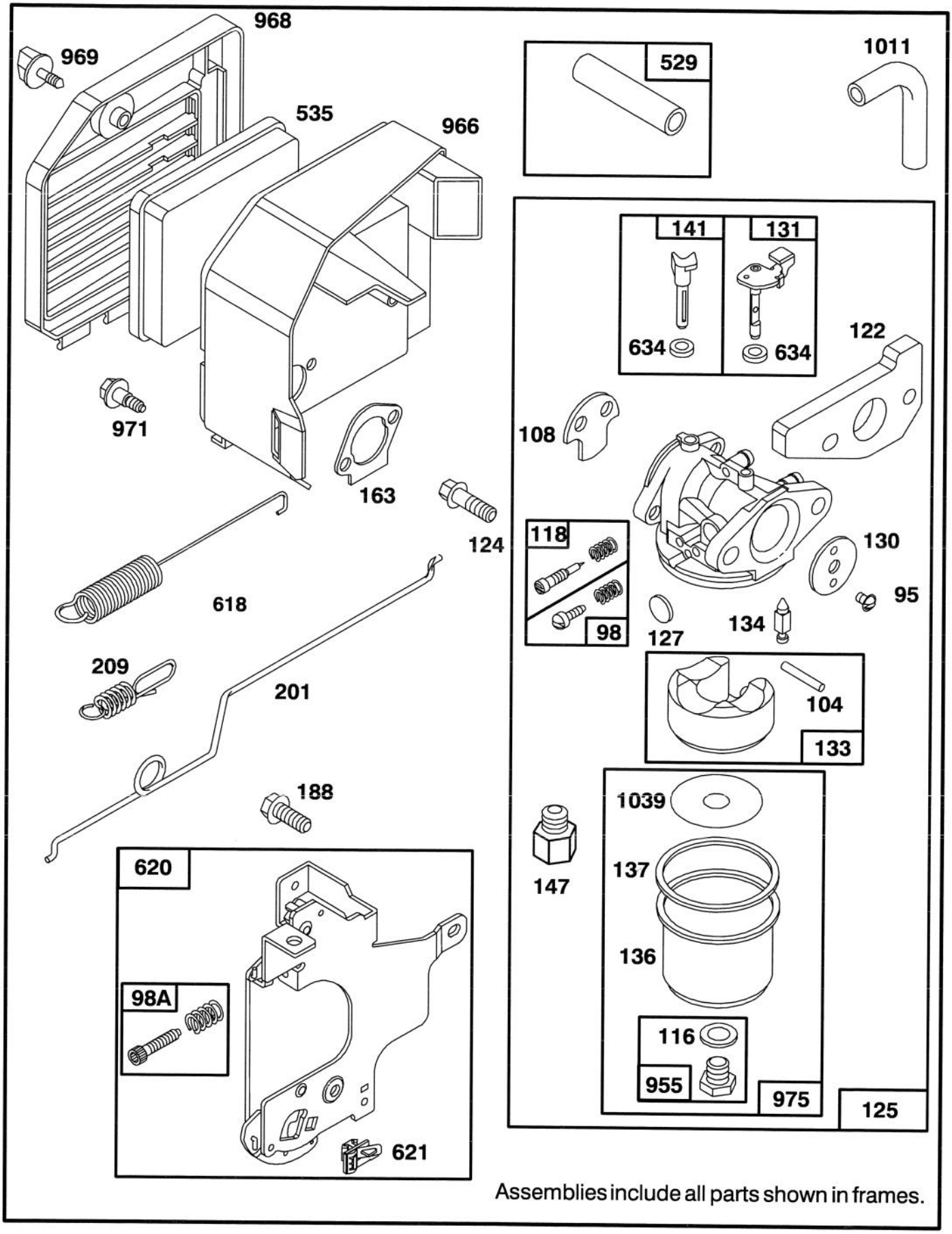

Assemblies include all parts shown in frames.

ENGINE GTS–150

Ref. No.	Part No.	Description	No. Used
95	77–8090	Screw – Round Head	1
98	77–8240	Screw – Idle Adj.	1
98A	77–8020	Screw Assy – Speed Adj.	1
†104	77–8180	Pin – Float Hinge	1
108	77–8070	Valve – Choke	1
†116	77–8210	Washer – Fuel Bowl	1
†118	77–8230	Valve & Kit – Needle	1
†122	77–7820	Adapter Assy.	1
124	77–7970	Screw – Hex Head (Carburetor Mounting)	2
125	77–8050	Carburetor Assy.	1
†127	77–8100	Plug – Welch	1
130	77–8080	Valve – Throttle	1
131	77–8160	Shaft – Throttle	1
133	77–8170	Float – Carburetor	1
†134	77–8110	Valve – Float (Includes Seat)	1
136	77–7240	Bowl – Fuel	1
†137	77–8200	Gasket – Fuel Bowl	1
141	77–8130	Shaft – Choke	1
147	77–8120	Adapter – Jet Note: For High Altitude Jet, Order Part No. 77–9000	1

Ref. No.	Part No.	Description	No. Used
*163	77–7960	Gasket – Air Cleaner	1
188	77–7450	Screw – Hex. Head (connecting bracket)	2
201	77–7980	Link – Governor	1
209	77–7990	Spring – Governor	1
529	77–8030	Tube – Breather	1
535	77–7950	Element – Filter Note: 77–9010 – Element Paper (Optional)	1
618	77–8140	Spring – Return	1
620	77–8000	Bracket – Carburetor	1
621	77–8010	Switch – Stop	1
†634	77–8150	Washer – Seal	2
955	77–8220	Screw – Hex. Head	1
966	77–7940	Base Air Cleaner	1
968	77–7040	Cover – Air Cover	1
969	77–7920	Screw – Air Cleaner	1
971	77–7930	Screw – Air Cleaner	3
975	77–8190	Bowl Assy. – Carburetor	1
1011	77–8040	Tube – Vent	1
†1039	77–7250	Limiter – Float	1

*Included in Gasket Set
†Included in Carburetor Overhaul Kit

ENGINE GTS–150

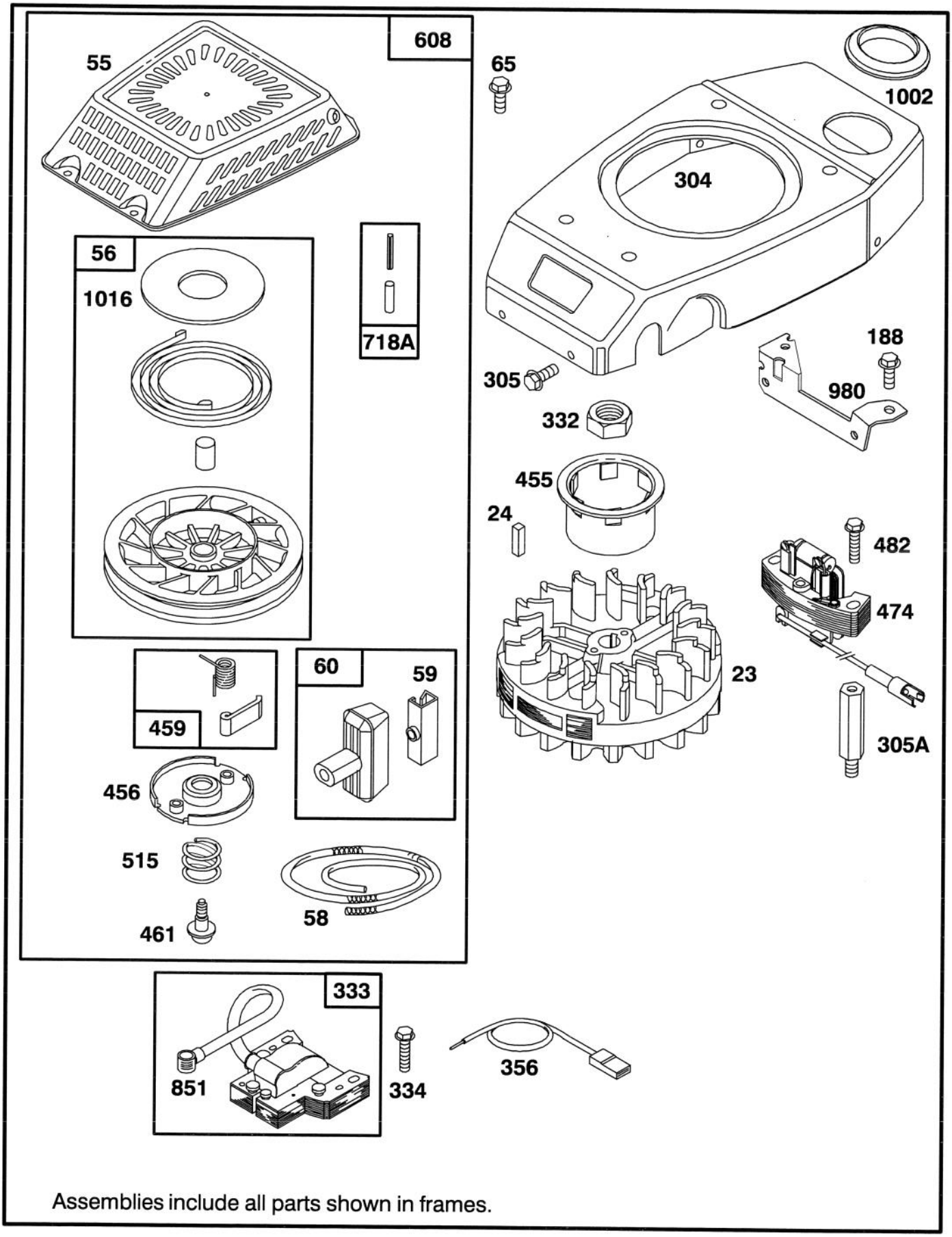

Assemblies include all parts shown in frames.

ENGINE GTS–150

Ref. No.	Part No.	Description	No. Used
23	77–8320	Flywheel – Magneto	1
24	77–8340	Key – Flywheel	1
55	77–8460	Housing – Rewind Starter	1
56	77–9270	Pulley – Rewind Starter	1
58	77–8480	Spool – Starter Rope (Cut To Suit)	1
59	77–7210	Insert – Starter Grip	1
60	77–8520	Grip – Starter Rope	1
65	77–8300	Screw – Hex. Head	4
188	77–7450	Screw – Hex. Head (Blower bracket)	2
304	77–8250	Housing – Blower	1
305	77–8310	Screw – Hex. Head (Blower Housing)	4
305A	77–8390	Stud – Mtg.	2
332	77–8360	Nut – Hexagon	1
333	77–8420	Armature – Magneto	1
334	77–8440	Screw – Sem	2
356	77–8400	Wire – Ground	1
455	77–8350	Cup – Starter	1
456	77–8470	Retainer – Spring	1
459	77–8530	Pawl & spring – Ratchet	2
461	77–8490	Screw – Rewind Starter	1
474	77–8370	Alternator	1
482	77–8870	Screw – Sem	2
515	77–8500	Spring – Retainer	1
608	77–8840	Starter Assy. – Rewind	1
718A	77–8550	Dowel – Sleeve	1
851	77–8430	Terminal – Spark Plug	1
980	77–7140	Bracket – Blower Housing	1
1002	77–7180	Grommet	1
1016	77–8570	Cover – Pulley	1

ENGINE GTS–150

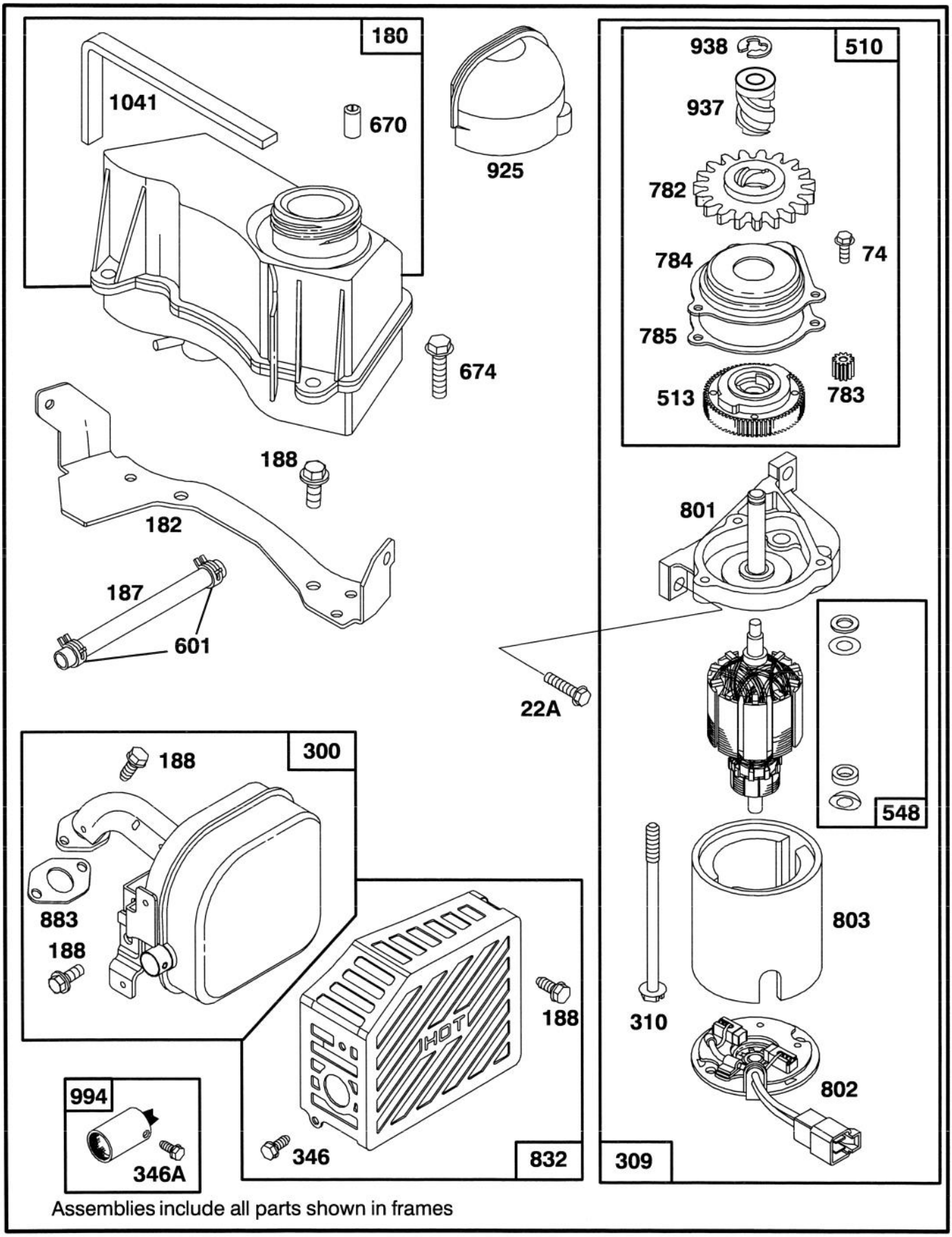

Assemblies include all parts shown in frames

ENGINE GTS–150

Ref. No.	Part No.	Description	No. Used
22A	77–8720	Screw – Carb. Mtg.	2
74	77–8800	Screw – Sem	3
180	77–8580	Tank Assy. – Fuel	1
182	77–7170	Bracket – Fuel Tank	1
187	77–8620	Hose – Fuel (Cut To Suit)	1
188	77–7450	Screw – Hex. Head (Muffler guard, muffler manifold to head, connecting bracket, Tk bracket)	7
300	77–8640	Muffler – Exhaust	1
309	77–8670	Motor Starter	1
310	77–8710	Bolt – Thru	2
346	77–8650	Screw – Self Tap (Muffler Guard)	2
346A	77–9050	Screw – Arrester Mtg.	1
510	77–8910	Drive – Starter	1
513	77–8770	Clutch – Starter	1
548	77–8740	Washer – Starter	1
601	77–8630	Clamp – Fuel Hose	2
670	77–9030	Spacer – Fuel Tank (Incl. 2)	1
674	77–8600	Screw – Tank Mtg.	2
782	77–8810	Gear – Starter	1
783	77–8760	Gear – Pinion	1
784	77–8780	Cover – Gear	1
785	77–8790	Gasket – Gear Cover	1
801	77–8680	Cap – Drive	1
802	77–8690	Cap – End	1
803	77–8700	Housing – Starter	1
832	77–9290	Guard – Muffler	1
*883	77–7760	Gasket – Exhaust	1
925	77–7200	Cover – Starter	1
937	77–8820	Drive – Starter	1
938	77–8830	Retainer – Lock	1
994	77–9040	Arrester – Spark	1
*1041	77–8590	Seal – Foam	1

*Included in Gasket Set

ENGINE GTS–150

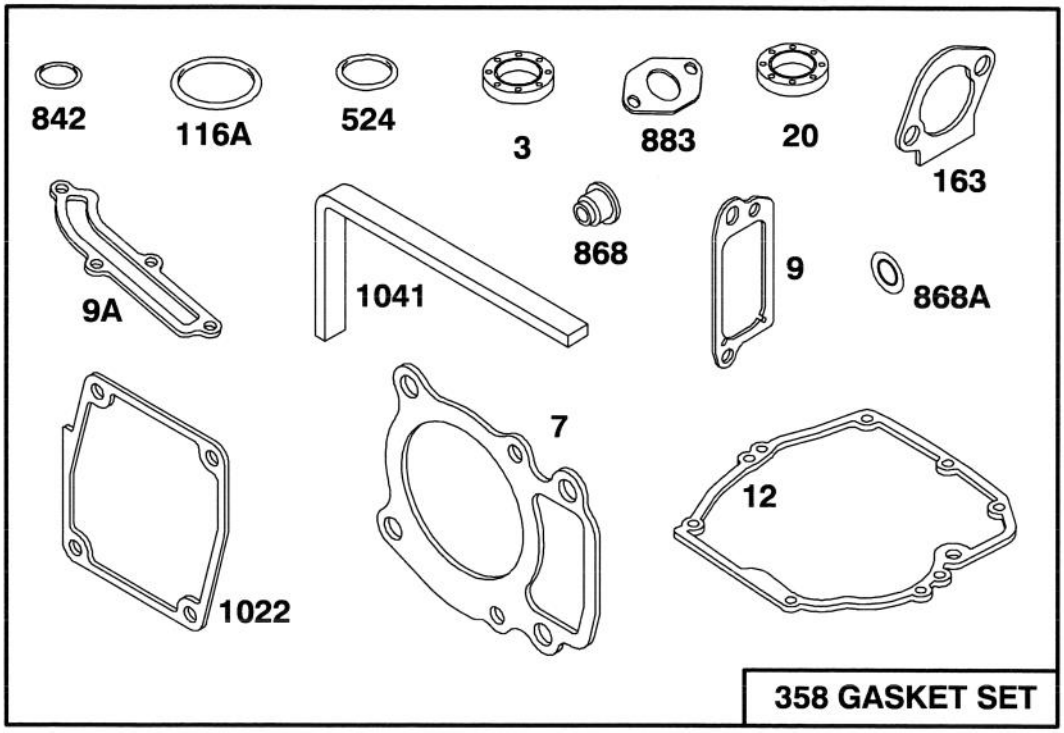

358 GASKET SET

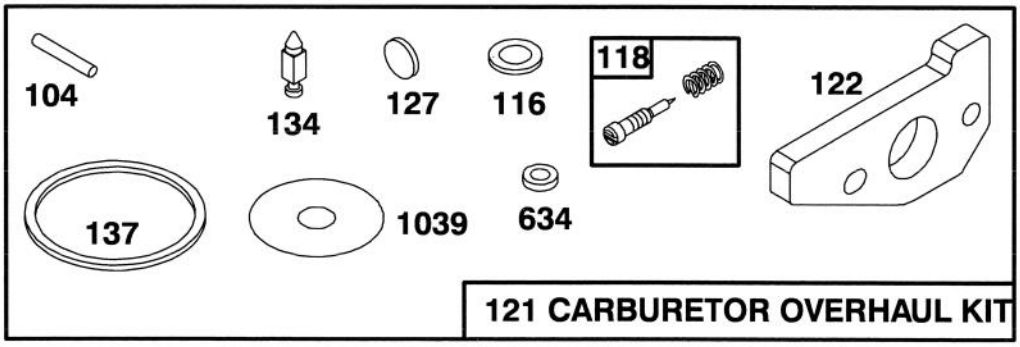

121 CARBURETOR OVERHAUL KIT

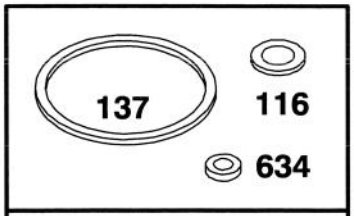

977 CARBURETOR GASKET SET

Assemblies include all parts shown in frames.

ENGINE GTS–150

Ref. No.	Part No.	Description	No. Used
* 3	77–9060	Seal – Oil	1
* 7	77–7740	Gasket – Cylinder Head	1
* 9	77–9250	Gasket – Valve Cover	1
* 9A	77–7410	Gasket – Breather	1
* 12	77–7550	Gasket – Engine Base	1
* 20	77–7570	Seal – Oil	1
† 104	77–8180	Pin – Float Hinge	1
†‡116	77–8210	Washer – Fuel Bowl	1
*116A	77–7660	Seal – O Ring	1
† 118	77–8230	Valve & Kit – Needle	1
† 121	77–8920	Overhaul Kit – Carburetor	1
† 122	77–7820	Adapter Assy.	1
† 127	77–8100	Plug – Welch	1
† 134	77–8110	Valve – Float (Includes Seat)	1
†‡137	77–8200	Gasket – Fuel Bowl	1
* 163	77–7960	Gasket – Air Cleaner	1
358	77–8900	Gasket Set	1
* 524	77–7270	Seal – Intake Elbow	1
‡ 634	77–8150	Washer – Seal	2
* 842	77–7300	Seal – O Ring	1
* 868	77–7890	Seal Assy. – Valve	1
*868A	77–7900	Gasket – Valve	1
* 883	77–7760	Gasket – Exhaust	1
977	77–8930	Gasket Set – Carburetor	1
*1022	77–7320	Gasket – Rocker Cover	1
†1039	77–7250	Limiter – Float	1
*1041	77–8590	Seal – Foam	1

† Included In Carburetor Overhaul Kit
‡ Included In Carburetor Gasket Set
*Included In Gasket Set

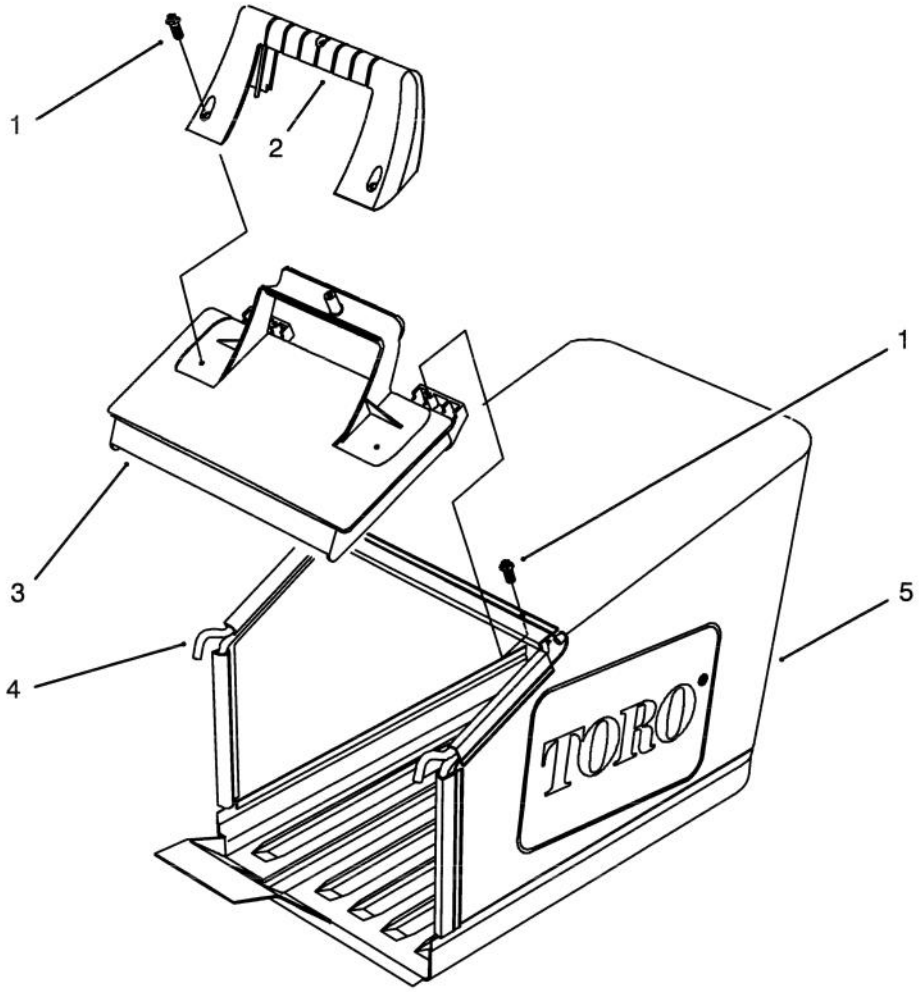

C–1509

GRASS BAG ASSEMBLY

Ref. No.	Part No.	Description	No. Used
1	32144–111	Screw – Hex Washer Hd Thr'd Form	5
2	71–9480	Handle – Door	1

Ref. No.	Part No.	Description	No. Used
3	71–9470	Door – Bag	1
4	71–9900	Frame – Bag	1
5	71–9460	Bag – Grass	1

TORO PART NUMBER INDEX

	Decal – Noise Rating	1	9	1
	Decal – Power Rating	1	31	1
614578	Gearcase	4	10	1
614596	Gear 34 Tooth	4	18	1
614668	Cover – Gear Case	4	2	1
614696	Shaft – Intermediate	4	4	1
14–9959	Wheel, Tire & Gear Assy.	3	22	2
16–1669	Housing – 48cm	1	2	1
16–1719	Panel – Control	5	3	1
17–9426	Screw – Handle	5	2	2
19–4050	Knob – Handle	5	25	2
22–4710	Charger – Battery	5	*	1
26–0672	Bolt – Blade	2	10	1
27–6230	Bolt – Wheel	3	23	2
27–6230	Bolt – Wheel	1	30	2
27–6250	Bushing – Wheel	3	24	4
27–6250	Bushing – Wheel	1	28	4
36–4780	Washer – Thrust	4	17	3
36–4791	Washer	4	5	2
38–7820	Bearing – Ball	4	15	1
40–1940	Washer – Wheel	1	27	2
46–1113	Wheel & Tire Assembly	1	29	2
46–5520	Lever – Traction	5	11	1
46–5780	Switch – Starter	5	30	1
46–8800	Lever – Control	5	10	1
46–9900	Bar – Control	5	7	1
47–2890	Bushing – Sleeve	3	4	2
47–6730	Seal – Grease	3	5	2
48–2060	Bearing – Needle	3	14	2
49–2040	Screw – Taptite	4	1	4
55–3570	Cap – Gas	2	13	1
55–3760	Pinion – 15 Tooth	4	3	1
60–8750	Bushing	4	6	2
60–8850	Bushing – Output	4	9	2
60–8890	Gear – Bevel Pinion	4	16	1
62–3860	Decal – Danger	1	4	1
62–6660	Spacer	4	11	1
62–7550	Pulley – Driver	2	12	1
63–8360	Key – Ignition	5	33	1
63–8480	Retainer – Battery	5	29	1
63–8570	Battery Ass'y	5	28	1
63–8590	Screw – Thread Forming	3	12	2
65–2720	Ring – Retaining	3	17	4
65–4710	Washer – Friction	3	15	2
65–4720	Spring – Compression	3	20	2
65–4740	Washer – Keyed Thrust	3	16	4
65–4750	Gear – Pinion	3	19	2
65–4760	Washer – Clutch	3	26	2
65–5210	Screw – Thread Forming	1	12	2
66–0330	Support – Spacer	5	12	2
66–0680	Decal – French Regulation	1	19	1
66–6040	Key – Rocking R.H.	3	*	1
66–6050	Key – Rocking L.H.	3	18	1
71–7630	Cap – Throttle Lower	5	17	1
71–7680	Cover – Throttle Lower	5	16	1
71–7740	Spring – Counterbalance	3	31	1
71–7770	Plate – Rear Securing	3	27	2
71–7820	Pivot – Front	1	25	1
71–7840	Rod – Trigger	3	8	1
71–7860	Grip – Upper	1	13	1
71–7870	Grip – Lower	1	6	1
71–7890	Guide – Belt Rear	1	21	1
71–7900	Cap – Hinge Bolt L.H.	1	16	1
71–7910	Cap – Hinge Bolt R.H.	1	11	1
71–7920	Cover – Belt	1	3	1
71–7930	Trigger – H.O.C.	1	7	1
71–7940	Retainer – Blade	2	6	1
71–7960	Guide – Engine Belt	2	11	1
71–7970	Rod – Link	3	30	1
71–7980	Indicator – H.O.C.	3	33	1
71–7990	Ramp – Discharge	1	22	1
71–8040	Plate – Throttle	5	23	1
71–8060	Spring – Trigger Return	3	10	2
71–8080	Saddle – H.O.C.	3	11	1
71–8090	Mount – Handle L.H.	5	*	1
71–8100	Mount – Handle R.H.	5	26	1
71–8110	Cable – Traction	5	19	1
71–8130	Bracket – Panel	5	24	1
71–8200	Bracket – Ignition Switch	5	34	1
71–8210	Blade – 48cm	2	7	1
71–8280	Bracket – Battery	5	27	2
71–8310	Spring – Compression	5	20	1
71–8393	Control – Throttle	5	6	1
71–8450	Cover – Spring	3	32	1
71–8580	Spacer – Door	1	20	2
71–8830	Retainer – Shaft	1	24	2
71–9020	Handle	5	1	1
71–9450	V–Belt	3	34	1
71–9460	Bag – Grass	16	5	1
71–9470	Door – Bag	16	3	1
71–9480	Handle – Door	16	2	1
71–9600	Gear Case Ass'y Complete	4	*	1
71–9600	Gearcase Assembly	3	35	1
71–9610	Pulley – Half	4	12	2
71–9620	Shaft – Output	4	7	1
71–9630	Bracket – Traction	3	36	1
71–9800	Door – Discharge	1	15	1
71–9810	Rear Pivot Assembly L.H.	3	6	1
71–9820	Rear Pivot Assembly R.H.	3	1	1
71–9840	Spring – Door	1	18	2
71–9850	Retainer Belt	3	3	1
71–9860	Decal – 48cm	1	1	1
71–9864	Decal – TORO K.L.	5	4	1
71–9866	Decal – Danger	5	5	1
71–9900	Frame – Bag	16	4	1
74–1660	Cover – Wheel	3	21	2
74–1670	Spacer – Wheel	3	25	2
77–7040	Cover – Air Cover	9	968	1
77–7060	Cover – Valve	7	1023	1
77–7140	Bracket – Blower Housing	11	980	1
77–7170	Bracket – Fuel Tank	13	182	1
77–7180	Grommet	11	1002	1
77–7200	Cover – Starter	13	925	1
77–7210	Insert – Starter Grip	11	59	1
77–7240	Bowl – Fuel	9	136	1
77–7250	Limiter – Float	9	1039	1
77–7250	Limiter – Float	15	1039	1
77–7260	Dipstick – Oil	7	523	1
77–7270	Seal – Intake Elbow	15*	524	1
77–7270	Seal – Intake Elbow	7	*524	1
77–7280	Tube – Oil Filler	7	525	1
77–7300	Seal – O Ring	7	*842	1
77–7300	Seal – O Ring	15*	842	1
77–7320	Gasket – Rocker Cover	7	*1022	1
77–7320	Gasket – Rocker Cover	15*	1022	1
77–7330	Plug – Spark	7	337	1
77–7340	Elbow – Spark Plug	7	635	1
77–7350	Tube – Breather	7	11	1
77–7360	Screw – Hex. Head	7	10	4
77–7370	Lever – Governor	7	227	1
77–7380	Bolt – Governor Lever	7	562	1
77–7390	Nut – Hex.	7	592	1
77–7400	Baffle – Cylinder	7	572	1
77–7410	Gasket – Breather	7	*9A	1
77–7410	Gasket – Breather	15*	9A	1
77–7420	Screw – Sem	7	307	4
77–7450	Screw – Hex. Head	11	188	2
77–7450	Screw – Hex. Head	13	188	7
77–7450	Screw – Hex. Head	9	188	2
77–7450	Screw – Sem	7	188	5
77–7460	Crank – Governor	7	616	1
77–7470	Washer – Thrust	7	230	1
77–7480	Push Nut	7	615	1
77–7490	Gear – Cam	7	46	1

*Not Illustrated

TORO PART NUMBER INDEX (Cont.)

Part No.	Description	Pg. No.	Ref. No.	Qty.
77–7500	Gear – Governor	7	219	1
77–7520	Crankshaft	7	16	1
77–7530	Gear – Timing	7	741	1
77–7550	Gasket – Engine Base	7	*12	1
77–7550	Gasket – Engine Base	15*	12	1
77–7560	Base – Engine	7	18	1
77–7570	Seal – Oil	7	*20	1
77–7570	Seal – Oil	15*	20	1
77–7590	Cylinder Assy.	7	1	1
77–7600	Dowel – Sleeve	7	718	2
77–7610	Tappet – Valve	7	45	2
77–7620	Rod – Push	7	1026	2
77–7630	Screw – Cylinder Head	7	13	4
77–7640	Pump – Oil	7	1024	1
77–7650	Cover – Oil Pump	7	979	1
77–7660	Seal – O Ring	15*	116A	1
77–7660	Seal – O Ring	7	*116A	1
77–7670	Rod – Connecting	7	29	1
77–7680	Screw – Connecting Rod	7	32	2
77–7690	Piston Assy. (Std.)	7	25	1
77–7700	Ring Set (Std.)	7	26	1
77–7710	Lock – Piston Pin	7	27	2
77–7720	Pin – Piston (STD)	7	28	1
77–7730	Head – Cylinder	7	5	1
77–7740	Gasket – Cylinder Head	7	*7	1
77–7740	Gasket – Cylinder Head	15*	7	1
77–7760	Gasket – Exhaust	13	*883	1
77–7760	Gasket – Exhaust	7	*883	1
77–7760	Gasket – Exhaust	15*	883	1
77–7770	Guide – Push Rod	7	1034	1
77–7780	Stud – Rocker Arm	7	166	2
77–7790	Arm – VLV Rocker	7	1029	2
77–7800	Cap – Valve	7	238	2
77–7810	Spring – Valve	7	35	2
77–7820	Adapter Assy.	7	122	1
77–7820	Adapter Assy.	9	122	1
77–7820	Adapter Assy.	15	122	1
77–7860	Valve – Exhaust	7	33	1
77–7870	Retainer – Spring	7	40	2
77–7880	Valve – Intake	7	34	1
77–7890	Seal Assy. – Valve	7	*868	1
77–7890	Seal Assy. – Valve	15*	868	1
77–7900	Gasket – Valve	7	*868A	1
77–7900	Gasket – Valve	15*	868A	1
77–7910	Nut – Hex Special	7	192	2
77–7920	Screw – Air Cleaner	9	969	1
77–7930	Screw – Air Cleaner	9	971	3
77–7940	Base Air Cleaner	9	966	1
77–7950	Element – Filter	9	535	1
77–7960	Gasket – Air Cleaner	9	*163	1
77–7960	Gasket – Air Cleaner	15*	163	1
77–7970	Screw – Hex Head	9	124	2
77–7980	Link – Governor	9	201	1
77–7990	Spring – Governor	9	209	1
77–8000	Bracket – Carburetor	9	620	1
77–8010	Switch – Stop	9	621	1
77–8020	Screw Assy – Speed Adj.	9	98A	1
77–8030	Tube – Breather	9	529	1
77–8040	Tube – Vent	9	1011	1
77–8050	Carburetor Assy.	9	125	1
77–8070	Valve – Choke	9	108	1
77–8080	Valve – Throttle	9	130	1
77–8090	Screw – Round Head	9	95	1
77–8100	Plug – Welch	9	127	1
77–8100	Plug – Welch	15	127	1
77–8110	Valve – Float	9	134	1
77–8110	Valve – Float	15	134	1
77–8120	Adapter – Jet	9	147	1
77–8130	Shaft – Choke	9	141	1
77–8140	Spring – Return	9	618	1
77–8150	Washer – Seal	9	634	2
77–8150	Washer – Seal	15	634	2
77–8160	Shaft – Throttle	9	131	1
77–8170	Float – Carburetor	9	133	1
77–8180	Pin – Float Hinge	9	104	1
77–8180	Pin – Float Hinge	15	104	1
77–8190	Bowl Assy. – Carburetor	9	975	1
77–8200	Gasket – Fuel Bowl	9	137	1
77–8200	Gasket – Fuel Bowl	15	137	1
77–8210	Washer – Fuel Bowl	9	116	1
77–8210	Washer – Fuel Bowl	15	116	1
77–8220	Screw – Hex. Head	9	955	1
77–8230	Valve & Kit – Needle	9	118	1
77–8230	Valve & Kit – Needle	15	118	1
77–8240	Screw – Idle Adj.	9	98	1
77–8250	Housing – Blower	11	304	1
77–8300	Screw – Hex. Head	11	65	4
77–8310	Screw – Hex. Head	11	305	4
77–8310	Screw – Hex. Head	7	305	2
77–8320	Flywheel – Magneto	11	23	1
77–8340	Key – Flywheel	11	24	1
77–8350	Cup – Starter	11	455	1
77–8360	Nut – Hexagon	11	332	1
77–8370	Alternator	11	474	1
77–8390	Stud – Mtg.	11	305A	2
77–8400	Wire – Ground	11	356	1
77–8420	Armature – Magneto	11	333	1
77–8430	Terminal – Spark Plug	11	851	1
77–8440	Screw – Sem	11	334	2
77–8460	Housing – Rewind Starter	11	55	1
77–8470	Retainer – Spring	11	456	1
77–8480	Spool – Starter Rope	11	58	1
77–8490	Screw – Rewind Starter	11	461	1
77–8500	Spring – Retainer	11	515	1
77–8520	Grip – Starter Rope	11	60	1
77–8530	Pawl & spring – Ratchet	11	459	2
77–8550	Dowel – Sleeve	11	718A	1
77–8570	Cover – Pulley	11	1016	1
77–8580	Tank Assy. – Fuel	13	180	1
77–8590	Seal – Foam	13	*1041	1
77–8590	Seal – Foam	15*	1041	1
77–8600	Screw – Tank Mtg.	13	674	2
77–8620	Hose – Fuel	13	187	1
77–8630	Clamp – Fuel Hose	13	601	2
77–8640	Muffler – Exhaust	13	300	1
77–8650	Screw – Self Tap	13	346	2
77–8670	Motor Starter	13	309	1
77–8680	Cap – Drive	13	801	1
77–8690	Cap – End	13	802	1
77–8700	Housing – Starter	13	803	1
77–8710	Bolt – Thru	13	310	2
77–8720	Screw – Carb. Mtg.	13	22A	2
77–8740	Washer – Starter	13	548	1
77–8760	Gear – Pinion	13	783	1
77–8770	Clutch – Starter	13	513	1
77–8780	Cover – Gear	13	784	1
77–8790	Gasket – Gear Cover	13	785	1
77–8800	Screw – Sem	13	74	3
77–8810	Gear – Starter	13	782	1
77–8820	Drive – Starter	13	937	1
77–8830	Retainer – Lock	13	938	1
77–8840	Starter Assy. – Rewind	11	608	1
77–8870	Screw – Sem	11	482	2
77–8900	Gasket Set	15	358	1
77–8910	Drive – Starter	13	510	1
77–8920	Overhaul Kit – Carburetor	15	121	1
77–8930	Gasket Set – Carburetor	15	977	1
77–8950	Engine – Complete	2	1	1
77–9020	Short Block	7		1
77–9030	Spacer – Fuel Tank	13	670	1
77–9040	Arrester – Spark	13	994	1
77–9050	Screw – Arrester Mtg.	13	346A	1
77–9060	Seal – Oil	7	*3	1
77–9060	Seal – Oil	15*	3	1

*Not Illustrated

TORO PART NUMBER INDEX (Cont.)

Part No.	Description	Pg. No.	Ref. No.	Qty.
77–9070	Screw – Engine Base	7	22	7
77–9200	Screw – Hex Hd.	7	10A	2
77–9240	Plug – Pipe	7	15	1
77–9250	Gasket – Valve Cover	15*	9	1
77–9250	Gasket – Breather	7	*9	1
77–9260	Breather Valve	7	8	1
77–9270	Pulley – Rewind Starter	11	56	1
77–9290	Guard – Muffler	13	832	1
80–2770	Cup – Anti–Scalp	2	8	1
80–4791	Wire Harness	5	35	1
80–4800	Decal – Recoil	2	3	1
86–7990	Screw – Clamp	2	15	1
92–2289	Plate – Toro Logo	2	2	1
218–461	Nut – Lock	5	31	1
2210–249	Clamp – Casing	2	14	1
302–26	Fitting – Grease	3	2	2
321–3	Screw – Cap Hex. Hd.	5	13	1
322–29	Screw – Cap Hex. Hd.	1	17	2
3253–22	Washer – Lock	2	9	1
3254–5	Washer – Lock	5	32	1
3256–24	Washer	4	13	1
3284–5	Pin – Roll	1	8	1
3290–378	Tie – Cable	5	21	3
3296–5	Nut	4	14	1
3296–5	Nut – Lock	3	7	2
3296–5	Nut – Lock	1	26	2
3296–29	Nut – Flange Lock	5	8	2
3296–42	Nut – Lock	5	9	1
32104–121	Screw – Thread Forming	5	15	1
32112–11	Nut – Push	1	23	1
32112–13	Nut – Push	3	13	1
32121–114	Pin – Spirol	4	8	2
32144–4	Screw – Thread Forming	2	5	2
32144–4	Screw – Thread Forming	1	10	10
32144–4	Screw – Thread Forming	3	28	6
32144–31	Screw – Thread Forming	3	9	1
32144–70	Screw – Hex. Flange Hd.	1	5	1
32144–97	Screw – Thread Forming	1	14	2
32144–97	Screw – Thread Forming	5	14	9
32144–98	Screw – Thread Forming	5	22	4
32144–99	Screw – Thread Forming	5	18	2
32144–102	Screw – Thread Forming	2	4	3
32144–111	Screw – Hex Washer Hd	16	1	5
32151–93	Ring – Grip	3	29	1

*Not Illustrated

PRODUCT CHANGES

In an effort to make improvements available to TORO owners as quickly as possible, minor changes are incorporated into Toro's products from time to time that do not become immediately shown in the Parts Catalog. If such a change has been made in your unit, which is not reflected in your manual, see your TORO Distributor or his Authorized TORO Service Dealer for information and part numbers.

COUNTRIES OTHER THAN THE UNITED STATES OR CANADA

Customers who have purchased TORO products exported from the United States or Canada should contact their Toro Distributor (Dealer) to obtain guarantee policies for your country, province or state. If for any reason you are dissatisfied with your Distributor's service or have difficulty obtaining guarantee information, contact the TORO importer. If all other remedies fail, you may contact us at The Toro Company.

MAINTENANCE RECORD

Date								

Compliance with Radio Interference Regulations Certified.
Certifie Conforme au Reglement sur le Brouillage Radioelectrique.

Litho in U.S.A.