FORM N0. 3316–141A

TORO®

MODEL NO. 73420–3900001 & UP
MODEL NO. 73440–3900001 & UP

PARTS CATALOG

WHEEL HORSE®

416–8 Garden Tractor
416–8e Garden Tractor

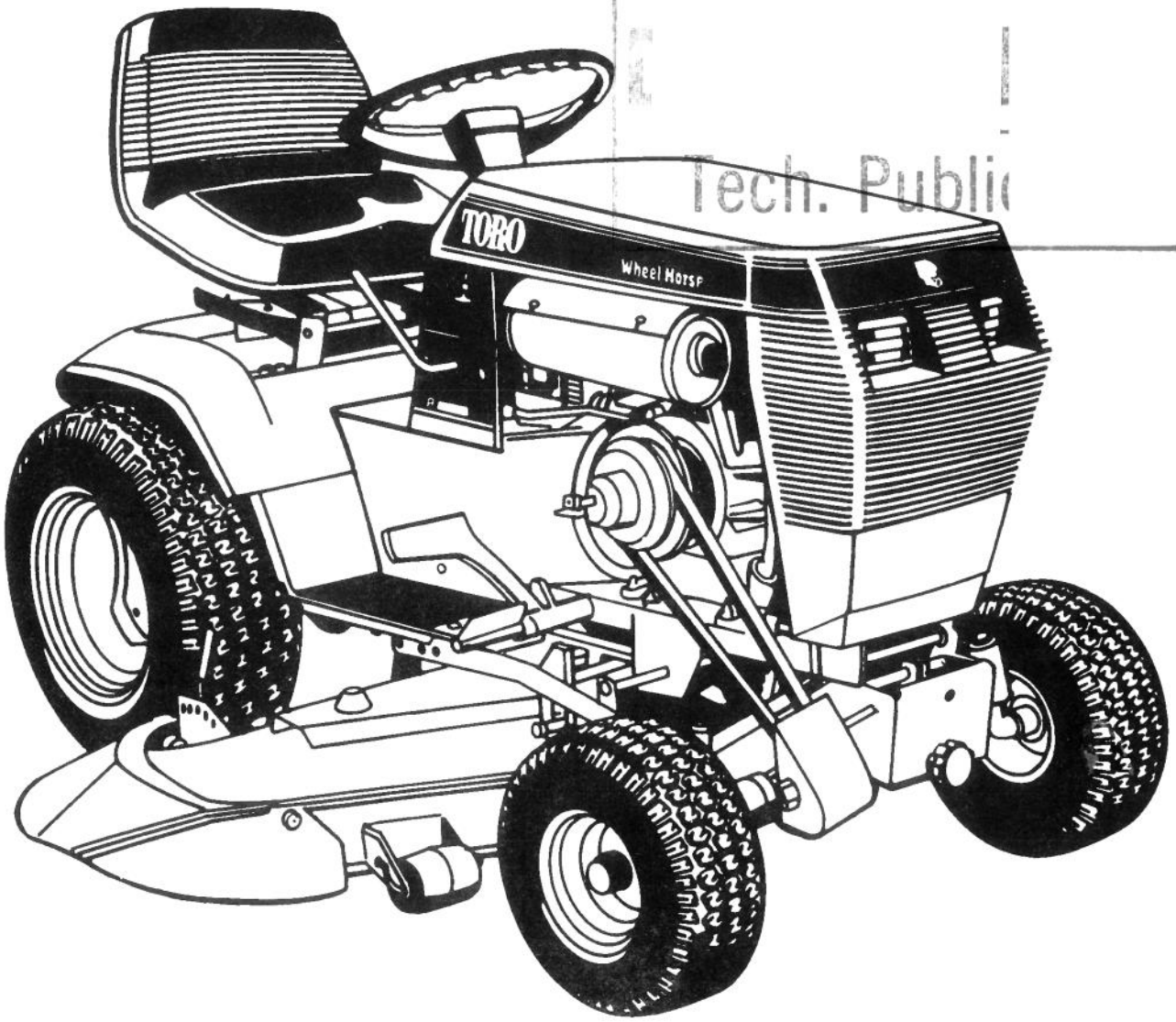

Tech. Publi

© The TORO Company –1993
All Rights Reserved

TPS

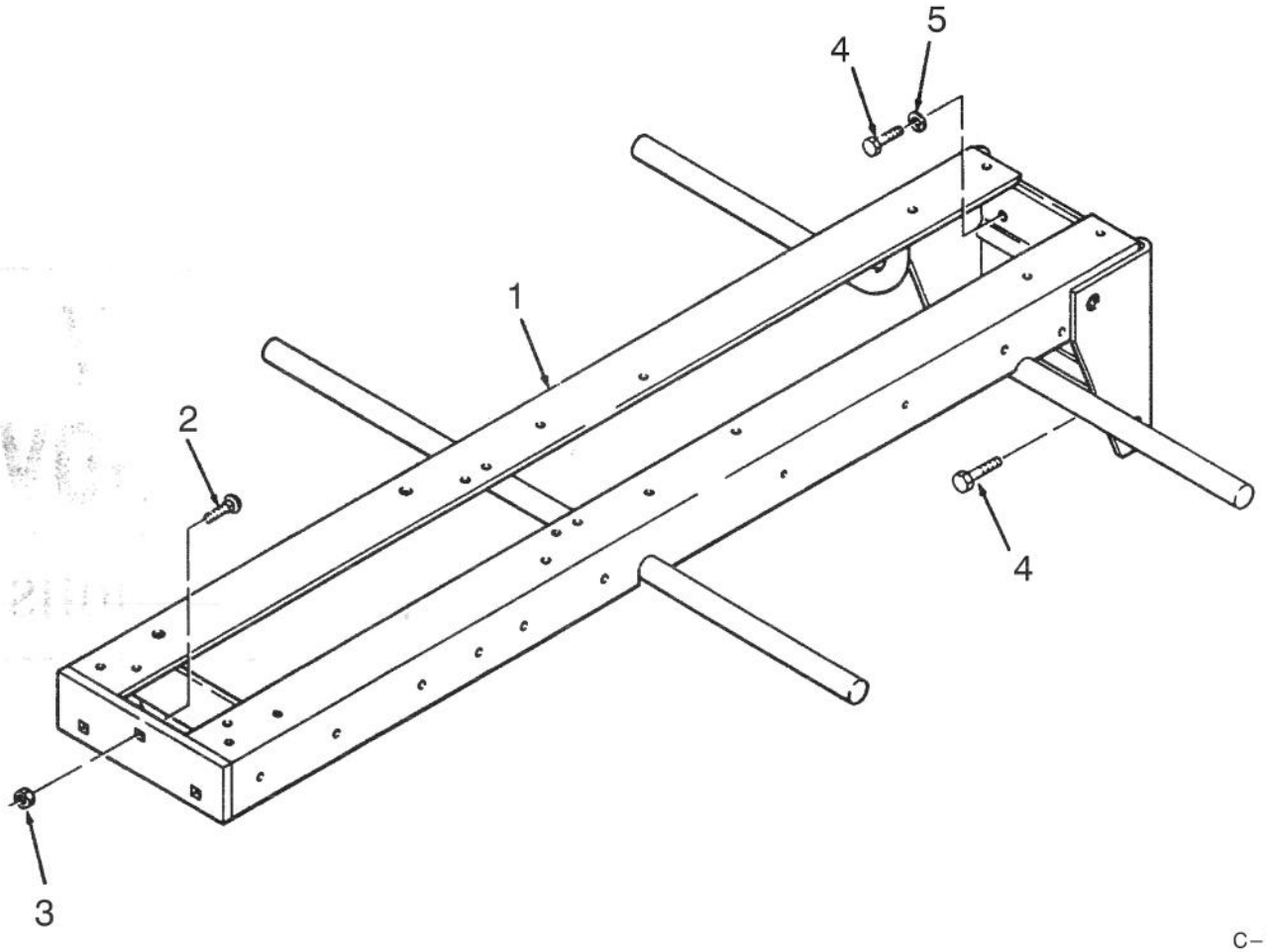

C–1471

FRAME

Ref. No.	Part No.	Description	No. Used
1	78–2680	Frame	1
2	3231–25	Bolt – Carriage	3
3	3296–39	Nut	3

Ref. No.	Part No.	Description	No. Used
4	323–5	Bolt	4
5	3253–21	Washer – Lock	4

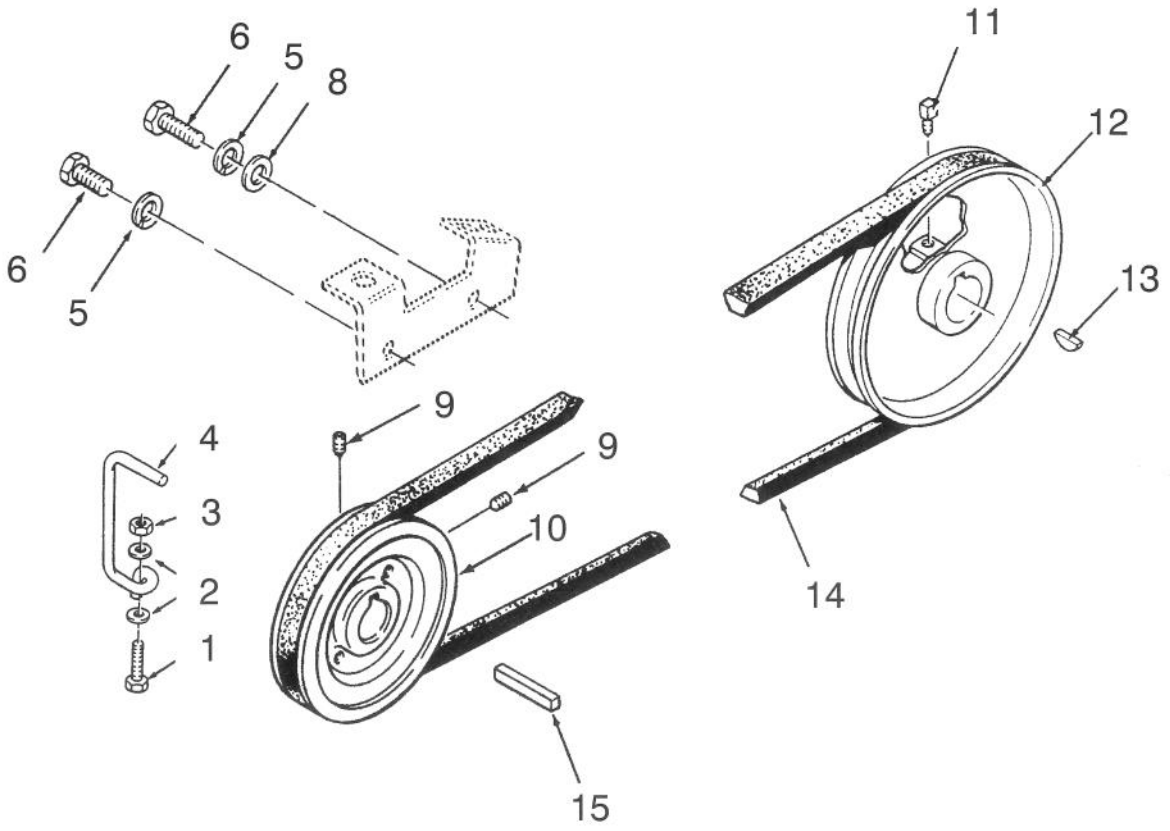

C–1656

DRIVE BELT AND PULLEYS

Ref. No.	Part No.	Description	No. Used
1	322–6	Bolt	2
2	3256–3	Washer	2
3	3296–29	Nut	2
4	120320	Guide – Belt	1
5	3253–21	Washer – Lock	3
6	323–6	Bolt	3
8	3256–25	Washer	3

Ref. No.	Part No.	Description	No. Used
9	3246–2	Screw – Set	2
10	7466	Pulley – Engine Drive	1
11	3242–2	Screw – Set	2
12	106165	Pulley – Transmission Drive	1
13	937221	Key – Hi–Pro	1
14	107939	Belt – Drive	1
15	105453	Key	1

TRANSMISSION 8–SPEED

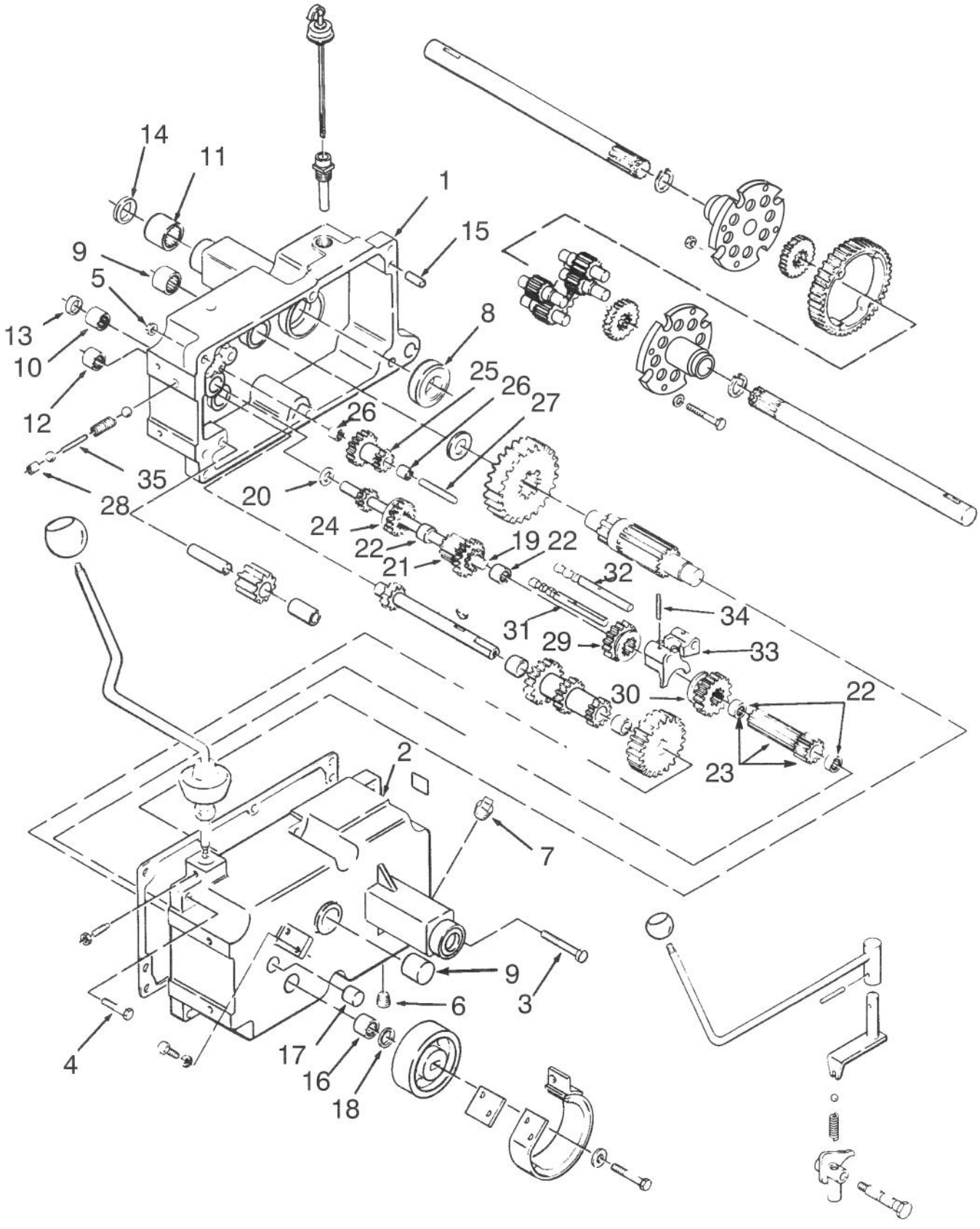

C–1473

TRANSMISSION 8–SPEED

Ref. No.	Part No.	Description	No. Used
*	110995	Transmission Assembly (Incl. Ref.#1–35)	1
1	111200	Case–Transmission, RH	1
2	111198	Case–Transmission, L.H.	1
3	323–15	Bolt	1
4	323–10	Bolt	5
5	3296–39	Nut	6
6	281–10	Plug – Pipe, Allen Hd	1
7	281–2	Plug – Pipe, Sq Hd	1
8	111199	Bearing – Ball	2
9	1532	Bearing – Needle	2
10	1542	Bearing – Needle	1
11	9416	Bearing – Needle	2
12	1529	Bearing – Needle	1
13	100442	Seal – Input Shaft	1
14	100443	Seal – Axle	2
15	3915	Pin – Locating	2
16	1523	Bearing – Needle	1
17	83–2890	Bearing – Needle	1
18	100441	Seal – Brake Shaft	1
19	7201	Shaft – Input	1
20	7418	Washer – Thrust	1
21	7204	Gear Assembly (Incl. Ref. #22)	1
22	1518	Bearing – Needle	4
23	5175	Gear Assembly (Incl. Ref. # 22)	1
24	7205	Gear – Sliding	1
25	7206	Gear – Reduction	1
26	7207	Bearing – Needle	2
27	7208	Shaft – Reduction Gear	1
28	1243	Cup – Plug	1
29	5173	Gear – 2nd & 3rd	1
30	5174	Gear – 1st & Reverse	1
31	5615	Rail – Shift, Front	1
32	5616	Rail – Shift, Rear	1
33	3503	Fork – Shift	2
34	933156	Pin – Spirol	2
35	5614	Pin – Shift	1

*Not Illustrated

TRANSMISSION 8–SPEED

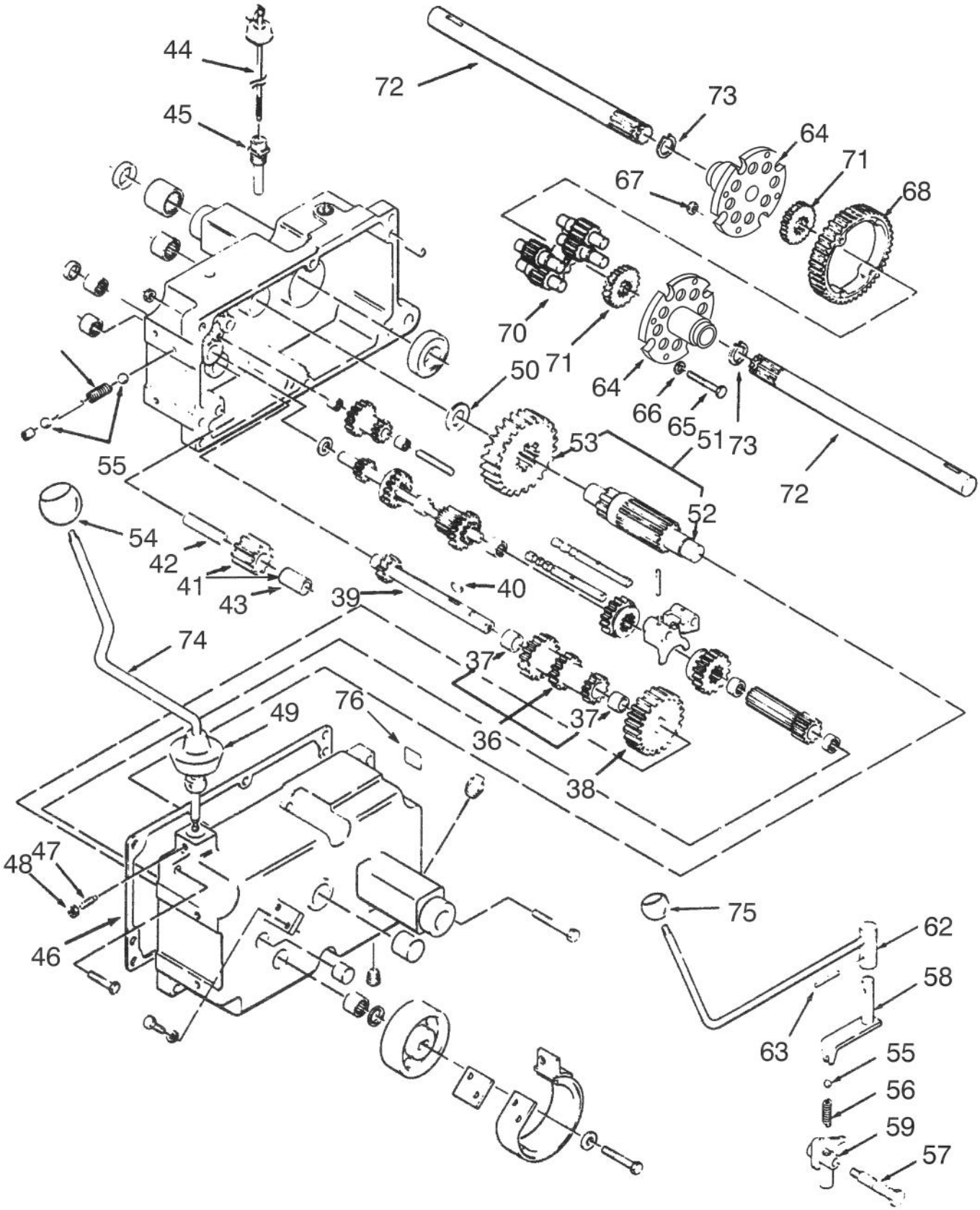

C–1473A

TRANSMISSION 8–SPEED

Ref. No.	Part No.	Description	No. Used
36	7269	Gear Assembly (Incl. Ref.#37)	1
37	1504	Bushing – Bronze	2
38	3527	Gear – Reduction	1
39	83–3530	Shaft – Cluster	1
40	937089	Key – Woodruff	1
41	4204	Gear Assembly, Reverse Idler (Incl. Ref. #43)	1
42	3909	Pin – Reverse Idler	1
43	1516	Bushing – Reverse Idler	1
44	101847	Dipstick	1
45	102703	Nipple – Transmission Fill	1
46	3912	Gasket – Transmission	1
47	1239	Screw – Set, Special	1
48	3217–5	Nut	1
49	3577	Cover – Dust	1
50	9547	Washer – Thrust	1
51	102974	Gear Assembly (Incl. Ref.# 52 & 53)	1
52	101625	Shaft – Pinion	1
53	101626	Gear 44 Tooth	1
54	108758	Knob – Gear Shift	1
55	3517	Ball – Detent	3
56	106030	Spring – Detent	2
57	7213	Bolt – Detent	1
58	7214	Lever – Shift Hi–Low Range	1
59	116636	Fork – Shift Hi–Low Range	1
62	110727	Rod – Shift Hi–Low Range	1
63	933184	Pin – Spirol	1
64	111196	Cap – Diff End	2
65	911423	Bolt	4
66	107374	Washer – Special	4
67	108881	Nut	4
68	105061	Gear – Differential Ring 43 Tooth	1
70	101623	Gear – Differential Pinion	8
71	101889	Gear – Differential Axle	2
72	105875	Axle – Rear	2
73	105876	Ring – Special, Snap	2
74	110725	Stick Shift Assembly	1
75	83–2710	Knob – Hi–Lo Range Shift	1
76	104955	Decal – Unidrive	1

FRONT AXLE AND STEERING

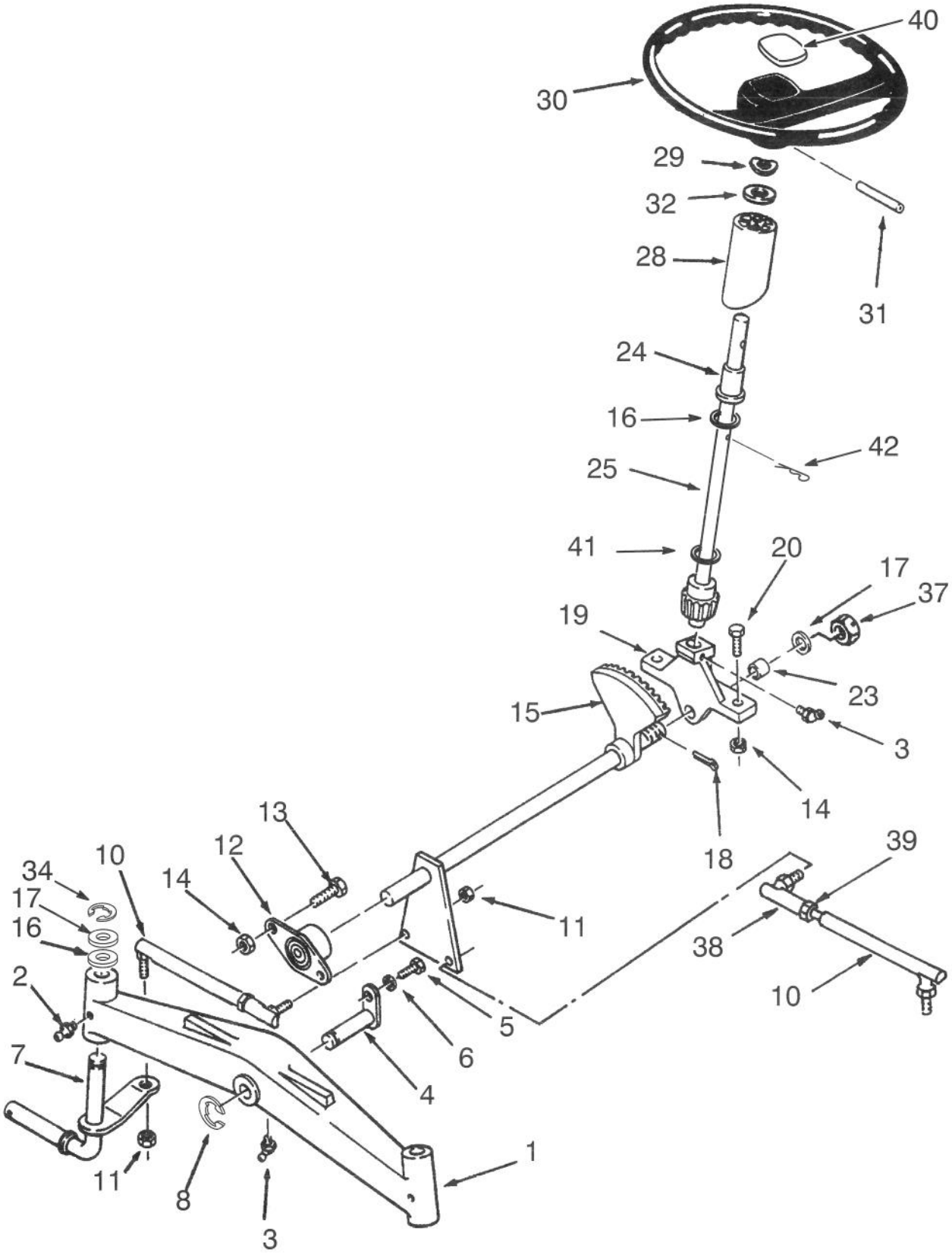

C–1474

FRONT AXLE AND STEERING

Ref. No.	Part No.	Description	No. Used
1	5638	Axle – Front	1
2	302–5	Fitting – Grease	2
3	1481	Fitting – Grease, 45°	2
4	6216	Pin & Plate	1
5	322–1	Bolt	1
6	3253–4	Washer – Lock	1
7	113381	Spindle – Front, L.H.	1
*	113382	Spindle – Front, RH	1
8	5618	Ring – Retaining	1
10	78–2900	Tie Rod Assembly (Incl. Ref. # 38 & 39)	2
11	9156934	Nut	4
12	6472	Bearing – Flanged	1
13	323–6	Bolt	2
14	3296–39	Nut – Lock	4
15	78–2880	Shaft	1
16	5210	Washer – Shim	8
17	1278	Washer – Shim	3
18	3272–19	Pin – Cotter	1

Ref. No.	Part No.	Description	No. Used
19	88–2710	Support – Steering	1
20	323–9	Bolt	2
23	6397	Bearing	1
24	109189	Bearing	1
25	92–4987	Steering Shaft Assembly	1
28	113443	Tube – Steering	1
29	7896	Washer – Bowed	1
30	76–1420	Steering Wheel (Incl. Ref. #40)	1
31	32121–111	Pin – Spirol	1
32	109262	Washer – Special	2
34	32120–93	Ring – Retaining	2
37	32136–5	Nut – Slotted	1
38	78–2920	Joint – Ball	1
39	915002	Nut	1
40	78–0370	Insert	1
41	237–69	"O"Ring	1
42	3272–21	Pin – Cotter	1

*Not Illustrated

CLUTCH, BRAKE AND SPEED CONTROL LINKAGE

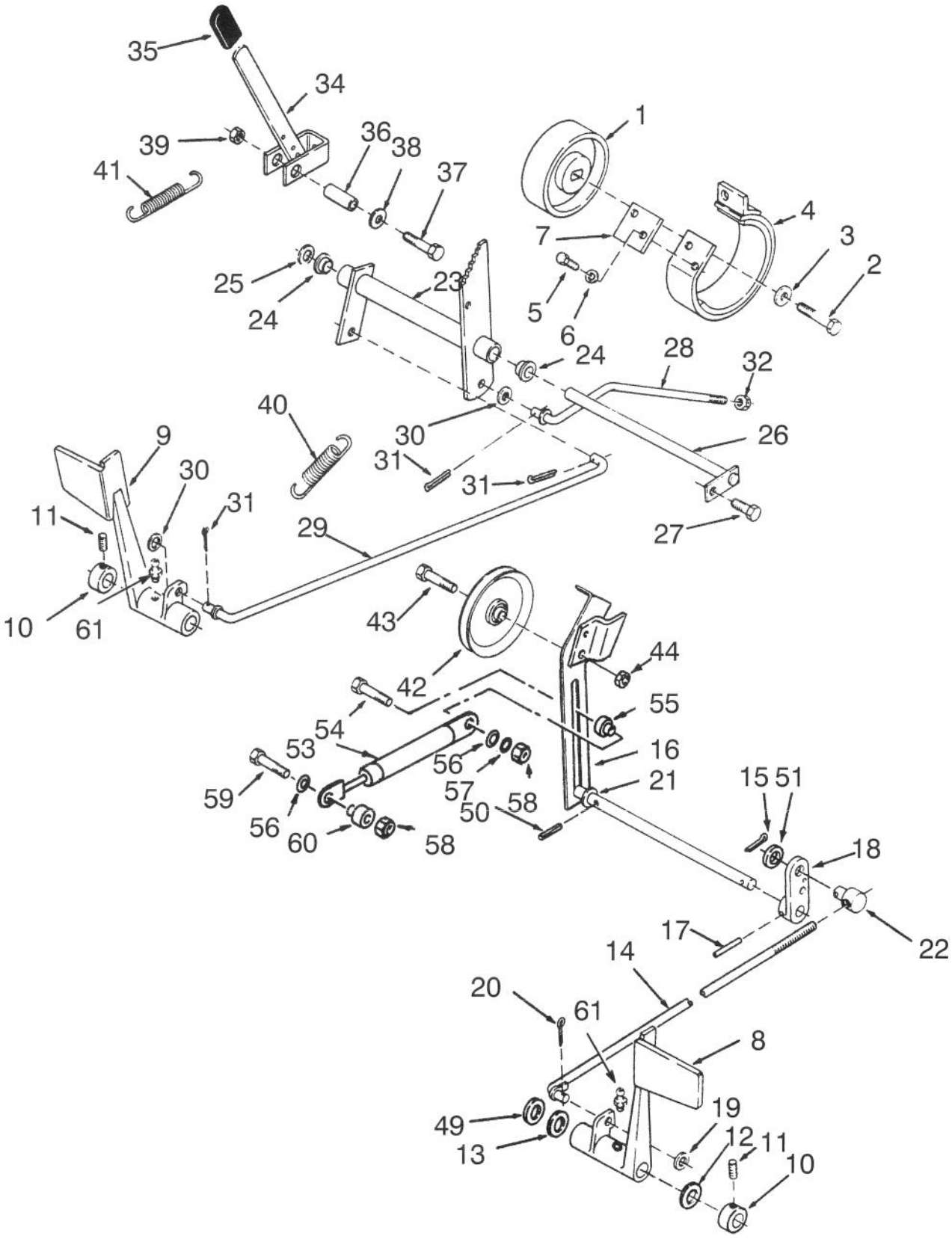

C–1475

CLUTCH, BRAKE AND SPEED CONTROL LINKAGE

Ref. No.	Part No.	Description	No. Used
1	106719	Drum – Brake	1
2	110234	Bolt	1
3	2844	Washer – Special	1
4	9593	Band – Brake	1
5	321–3	Bolt	2
6	3253–3	Washer – Lock	2
7	9598	Plate – Back–Up	1
8	114814	Pedal – Clutch	1
9	114813	Pedal – Brake	1
10	111383	Collar	2
11	3245–32	Screw – Set	2
12	7896	Washer – Bowed	1
13	1278	Washer – Shim	1
14	103347	Rod – Clutch	1
15	3272–6	Pin – Cotter	1
16	78–2970	Arm – Clutch Idler	1
17	933190	Pin – Spirol	1
18	105896	Arm – Clutch Rod	1
19	920248	Washer – Nylon	3
20	3272–10	Pin – Cotter	2
21	3765	Washer – Shim	1
22	101161	Trunnion – Clutch Rod	1
23	103543	Bell Crank – Brake Linkage	1
24	7879	Bushing	2
25	3256–26	Washer	1
26	106417	Rod – Bell Crank Pivot	1
27	9266944	Bolt	1
28	105900	Rod – Brake, Rear	1
29	105886	Rod – Brake, Front	1
30	920248	Washer – Nylon	2
31	3272–10	Pin – Cotter	3
32	3296–39	Nut	1
34	106451	Lever – Parking Brake	1
35	6820	Grip	1
36	102025	Spacer	1
37	323–9	Bolt	1
38	3256–24	Washer	1
39	102809	Nut – Special	1
40	107677	Spring – Brake Return	1
41	103628	Spring – Return	1
42	7451	Pulley – Idler	1
43	106193	Bolt – Special	1
44	3296–39	Nut	1
49	9202254	Washer – Special	1
50	933267	Pin – Spirol	1
51	3256–24	Washer	1
53	78–3240	Spring – Gas	1
54	321–6	Bolt	1
55	78–3260	Spacer	1
56	3256–22	Washer	2
57	3253–3	Washer – Lock	1
58	3296–42	Nut	2
59	321–9	Bolt	1
60	78–3250	Spacer	1
61	302–5	Fitting – Grease	2

HITCHES

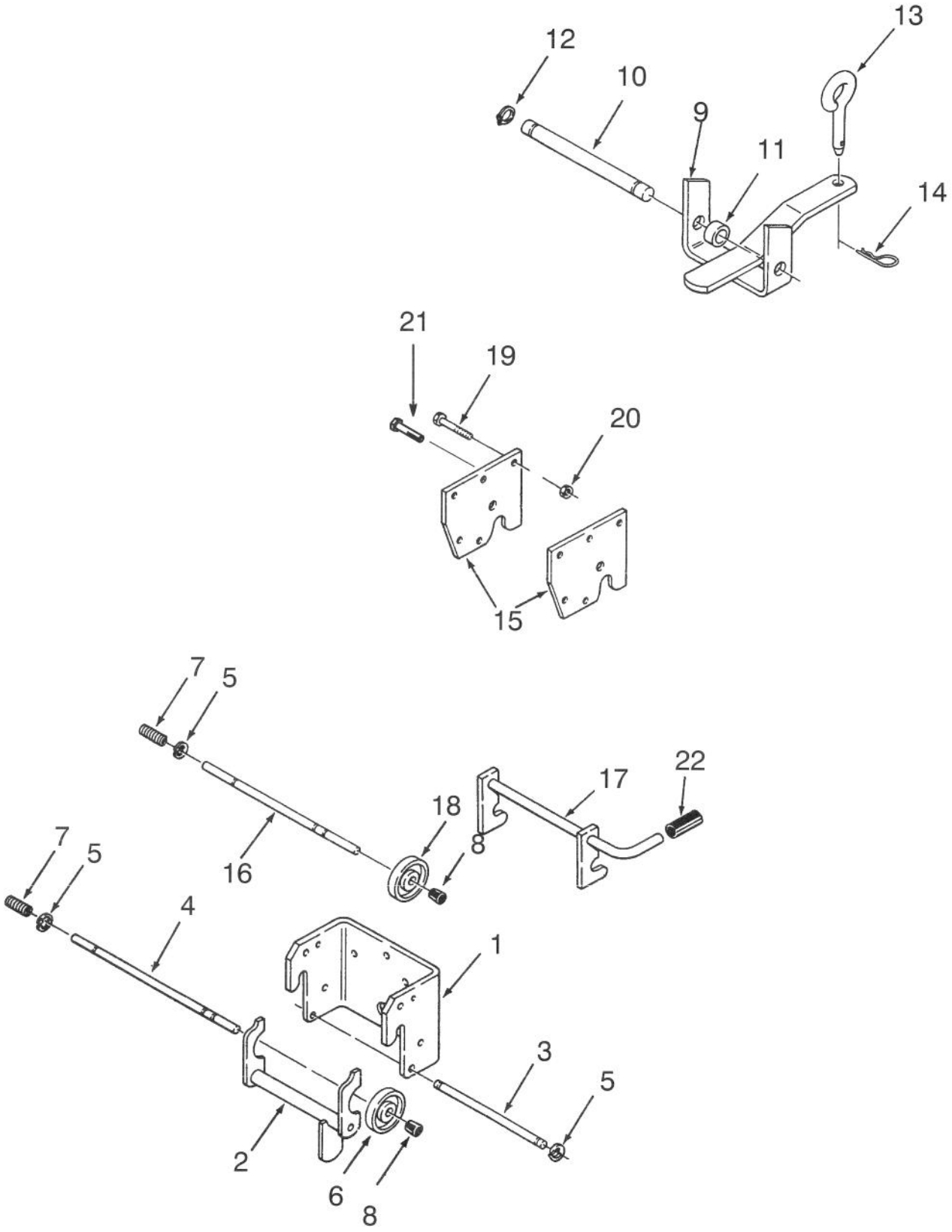

C–1476

HITCHES

Ref. No.	Part No.	Description	No. Used
1	101711	Housing – Front Hitch	1
2	105859	Latch – Front Hitch	1
3	101750	Rod	1
4	101751	Rod – Front Hitch Lock	1
5	105797	Ring – Retaining	8
6	101707	Lock	1
7	8616	Spring	2
8	105316	Cap – Lock Rod	2
9	1644	Hitch – Drawbar	1
10	105269	Shaft–Drawbar Hitch	1
11	9791204	Spacer	2
12	5618	Ring – Retaining	2
13	106634	Pin – Hitch	1
14	933505	Pin – Cotter	1
15	102644	Plate – Mid Hitch	2
16	117940	Rod – Mid Hitch Lock	1
17	117930	Latch – Mid Hitch	1
18	83–6520	Rod – Lock	1
19	3251–25	Bolt	3
20	3296–39	Nut	5
21	323–7	Bolt	2
22	9038	Grip	1

MANUAL LIFT LINKAGE

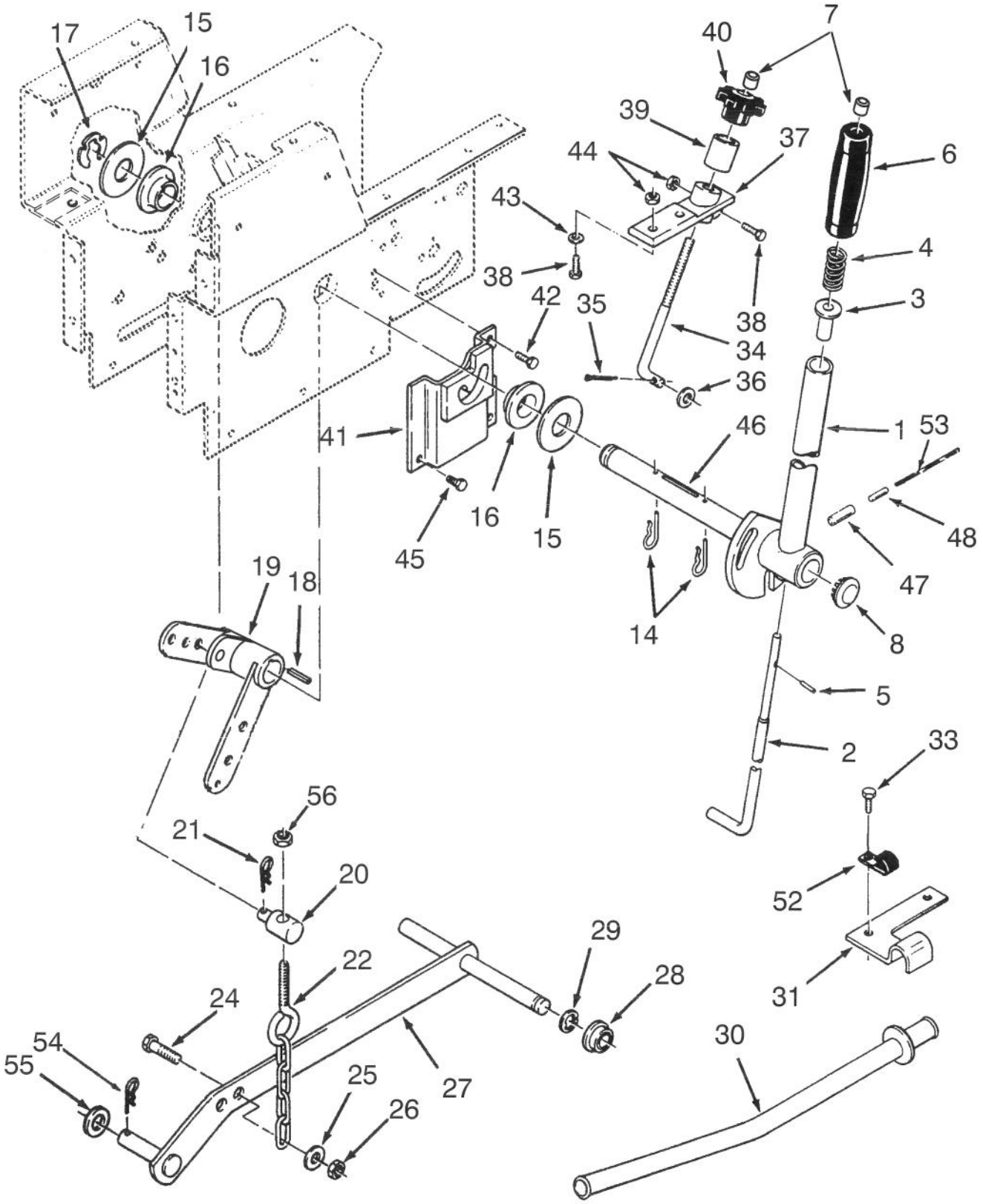

C–1653

MANUAL LIFT LINKAGE

Ref. No.	Part No.	Description	No. Used
1	108563	Lever – Lift (Incl. Ref.# 46, 47, & 48)	1
2	106257	Rod – Latch	1
3	8130	Retainer – Spring	1
4	3624	Spring	1
5	933148	Pin – Spirol	1
7	105316	Cap – Rod	2
6	6542	Grip – Lift Lever	1
8	4944	Button – Plug	1
14	933507	Pin – Cotter	2
15	3256–30	Washer	3
16	106269	Bushing	2
17	106414	Retainer	1
18	1121	Key	1
19	78–1550	Lever – Lift	1
20	6739	Trunnion	1
21	9335044	Pin – Cotter	1
22	106522	Chain – Lift	1
24	322–6	Bolt	1
25	3256–23	Washer	1
26	3296–29	Nut	1
27	113445	Bar – Lift	1
28	6229	Bearing	1
29	5701	Ring – Retaining	1

Ref. No.	Part No.	Description	No. Used
30	105845	Tube – Rear Lift Cable	1
31	108903	Clamp – Tube	1
33	3235–22	Bolt	2
34	110653	Rod – Height Control	1
35	3272–10	Pin – Cotter	1
36	3256–5	Washer	1
37	106345	Casting – Height Control	1
38	322–5	Bolt	3
39	106258	Sleeve	1
40	5280	Knob – Height Control	1
41	106411	Latch Bracket	1
42	9266944	Bolt	1
43	3256–23	Washer	2
44	3296–29	Nut	3
45	926696	Bolt	2
46	108565	Shaft	1
47	32121–103	Pin – Spirol	1
48	32121–25	Pin – Roll	1
52	8830	Clamp	1
53	111154	Wire – Lock	1
54	933505	Pin – Cotter	1
55	3256–26	Washer	1
56	3296–39	Nut	1

HOOD ASSEMBLY

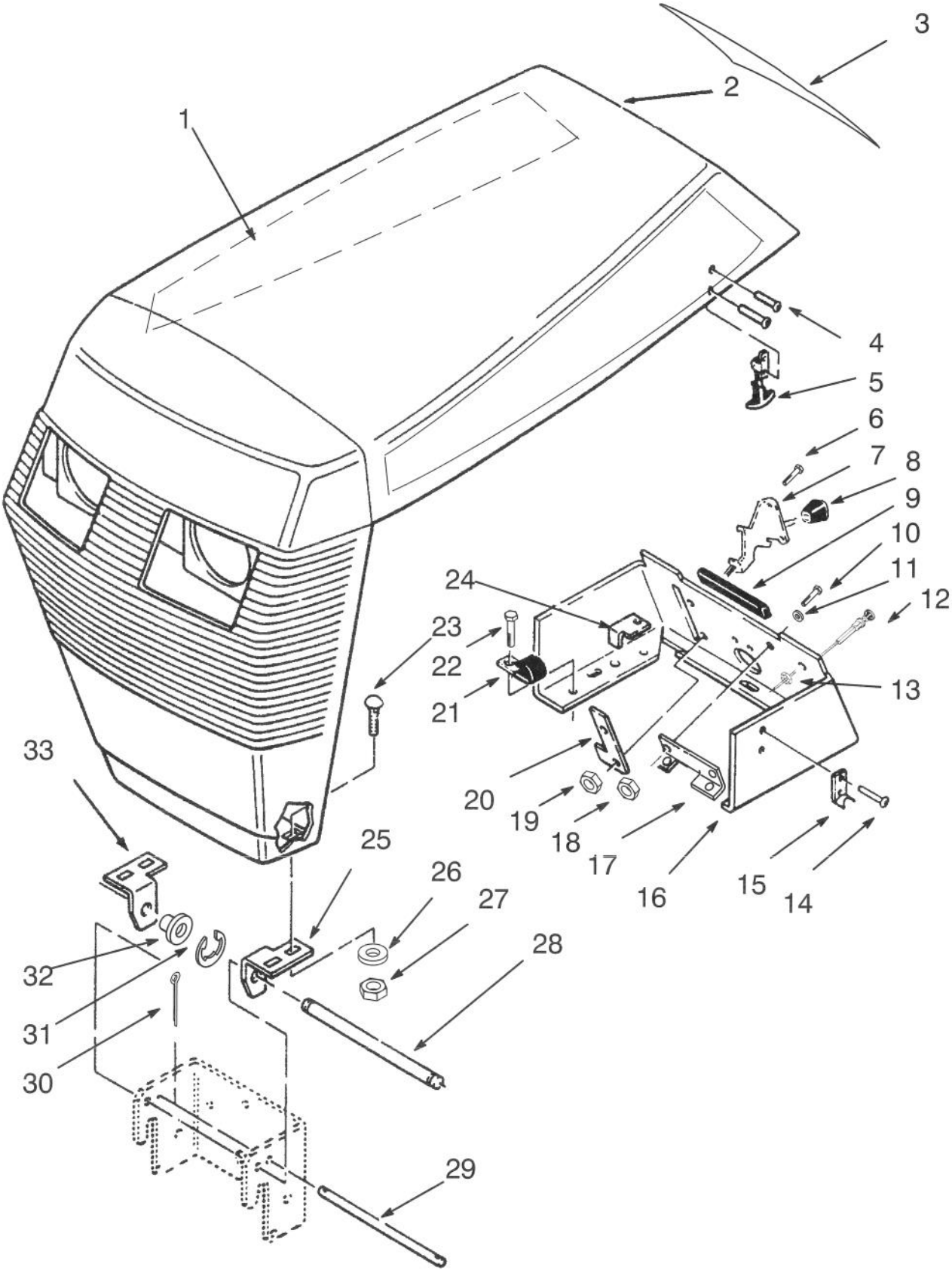

C–1652

HOOD ASSEMBLY

Ref. No.	Part No.	Description	No. Used
1	79–4640	Decal – 416–8 Speed R.H.	1
*	79–4650	Decal – 416–8 Speed L.H.	1
2	88–2782	Hood (Incl. Ref. # 3)	1
3	88–0020	Decal – Danger	1
4	117432	Rivet – Pop	4
5	117344	Handle Assembly (Incl. Ref. #15)	2
6	9107922	Screw	2
7	115392	Control – Throttle	1
8	116454	Knob – Control	1
9	111757	Edging – Console	1
10	9107622	Screw	2
11	9201504	Washer – Lock	2
12	114951	Control – Choke	1
13	109530	Nut	1
14	117431	Rivet – Pop	4
15	117343	Latch – Hood	2
16	111271	Console	1
17	112506	Bracket	1
18	9159604	Nut	2
19	9157404	Nut – Lock	2
20	120590	Stop – Throttle	1
21	111392	"J"Clip	1
22	9266944	Bolt – Washer Hd	3
23	3229–25	Bolt – Carriage	4
24	112415	Stop – PTO	1
25	116747	Bracket – L.H.	1
26	3256–22	Washer	4
27	32146–17	Nut	4
28	116745	Rod – Pivot	1
29	101850	Rod – Hood Stop	1
30	9320004	Pin – Cotter	2
31	105797	Ring – Retaining	2
32	5979	Bushing – Hood Pivot	2
33	116746	Bracket – RH	1

*Not Illustrated

HOOD STAND AND SUPPORTS

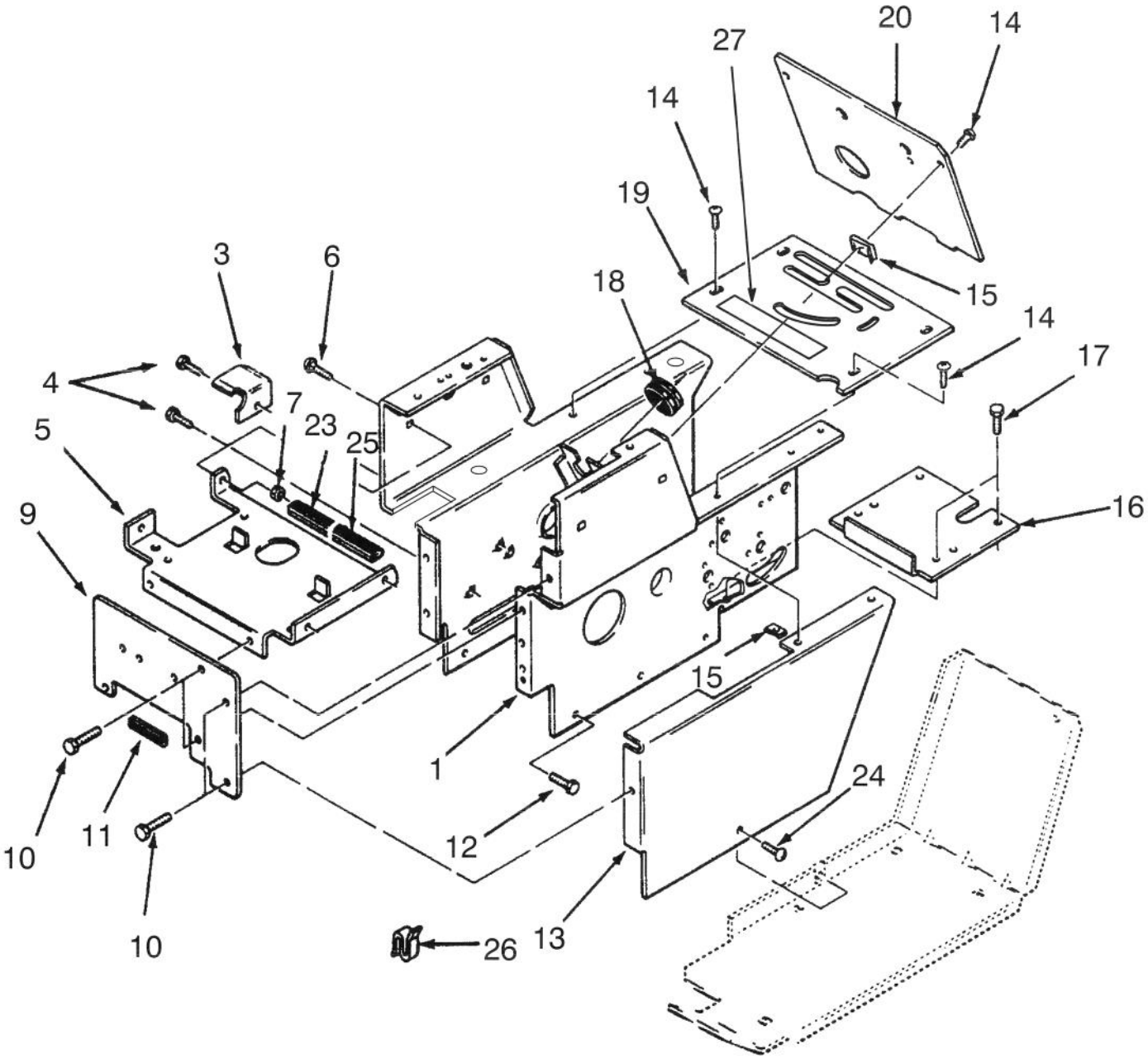

C–1479

HOOD STAND AND SUPPORTS

Ref. No.	Part No.	Description	No. Used
1	79–4900	Hoodstand	1
3	88–2170	Bracket – Belt	1
4	9266944	Bolt	1
5	78–3010	Bracket – Battery Support	1
6	117371	Bolt – Carriage	4
7	9151126	Nut	4
9	78–3020	Plate – Front	1
10	9266944	Bolt	1
11	106772	Trim – Edge 4"	1
12	9266944	Bolt	4
*	926696	Bolt	2
13	113935	Cover – Side, L.H.	1
14	9108372	Screw	6
15	107069	Nut – Speed	6
16	106250	Cover – Dust	1
17	9266944	Bolt	4
18	104248	Grommet	1
19	92–6529	Plate – Shift Cover (Incl. Ref.#27)	1
20	111034	Plate – Hood Stand	1
23	110142	Trim – Edge	1
24	9108372	Screw	1
25	106454	Trim – Edge	1
26	3023	Clip	1
27	79–0370	Decal – Danger	1

*Not Illustrated

FENDER AND SUPPORTS

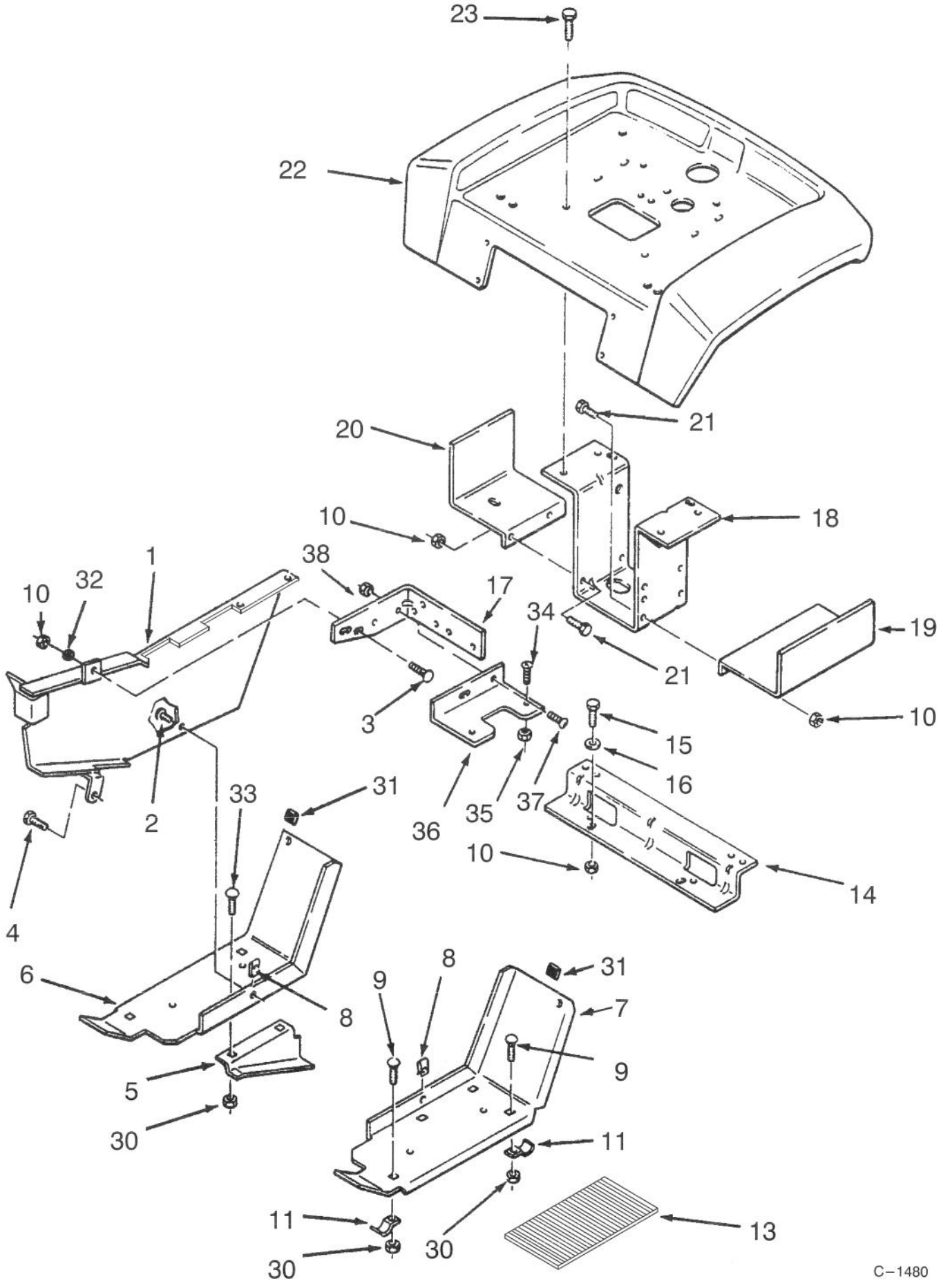

FENDER AND SUPPORTS

Ref. No.	Part No.	Description	No. Used
1	114877	Guard – Belt	1
2	9108372	Screw	2
3	116000	Bolt – Carriage	1
4	9266944	Bolt	1
5	106352	Guard – Lower Belt	1
6	106222	Footrest – RH	1
7	106223	Footrest – L.H.	1
8	107069	Clip	3
9	116000	Bolt – Carriage	6
10	3296–29	Nut	7
11	7456	Clamp	4
13	110636	Pad – Footrest	2
14	107951	Bracket – Fender Front	1
15	322–3	Bolt	2
16	3256–23	Washer	2
17	109554	Bracket – Belt Guard	1
18	79–4990	Bracket – Fender Support	1
19	108464	Support – Fuel Tank, L.H.	1
20	106236	Support – Fuel Tank, RH	1
21	322–3	Bolt	4
22	110960	Fender	1
23	9266944	Bolt	2
30	3296–29	Nut	6
31	111071	Bumper	2
32	108457	Nut – Push	1
33	118620	Bolt – Carriage	2
34	9107944	Screw – Machine	2
35	9157404	Nut	4
36	118280	Holder – Fuse	1
37	321–4	Bolt	2
38	3296–42	Nut	1

*Not Illustrated

3316–141A

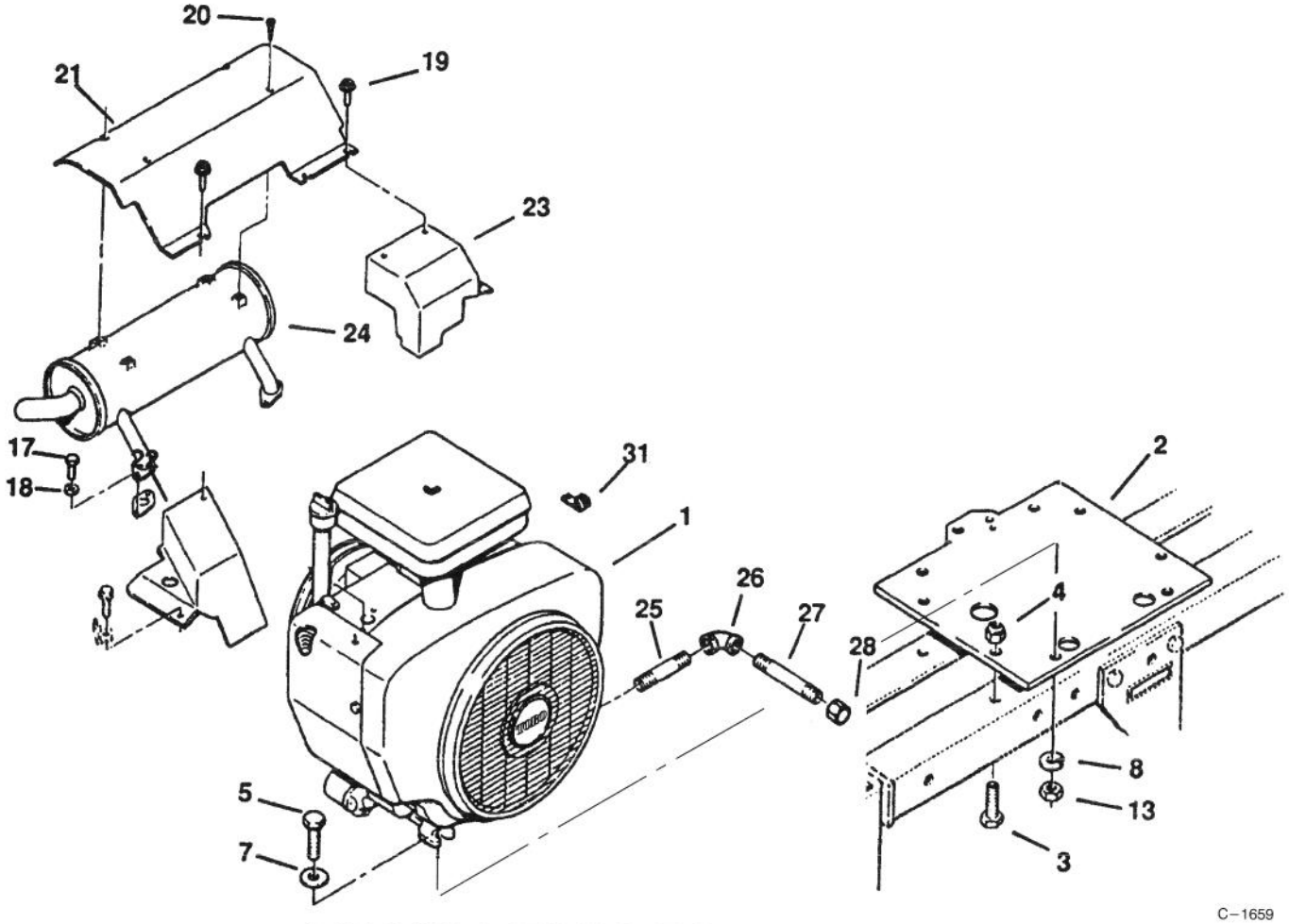

C–1659

ENGINE, TORO POWER PLUS

Ref. No.	Part No.	Description	No. Used
1	79–5210	Engine – 16HP TORO Power Plus P216G–I/10976D	1
2	116609	Plate – Engine	1
3	908035	Bolt	4
4	915553	Nut	4
5	908035	Bolt	4
7	3256–24	Washer	4
8	3253–24	Washer – Lock	4
13	32146–2	Nut	4
17	322–3	Bolt	4
18	3253–4	Washer	4
19	321–2	Bolt	3

Ref. No.	Part No.	Description	No. Used
20	910331	Screw	4
21	114217	Deflector – Air	1
22	114215	Cover – Exhaust, L.H.	1
23	114216	Cover – Exhaust, RH	1
24	116470	Muffler	1
25	114636	Pipe	1
26	114764	Elbow – 90°	1
27	114763	Pipe	1
28	5224	Cap	1
30	114214	Gasket – Exhaust	2
31	111357	Clip	1

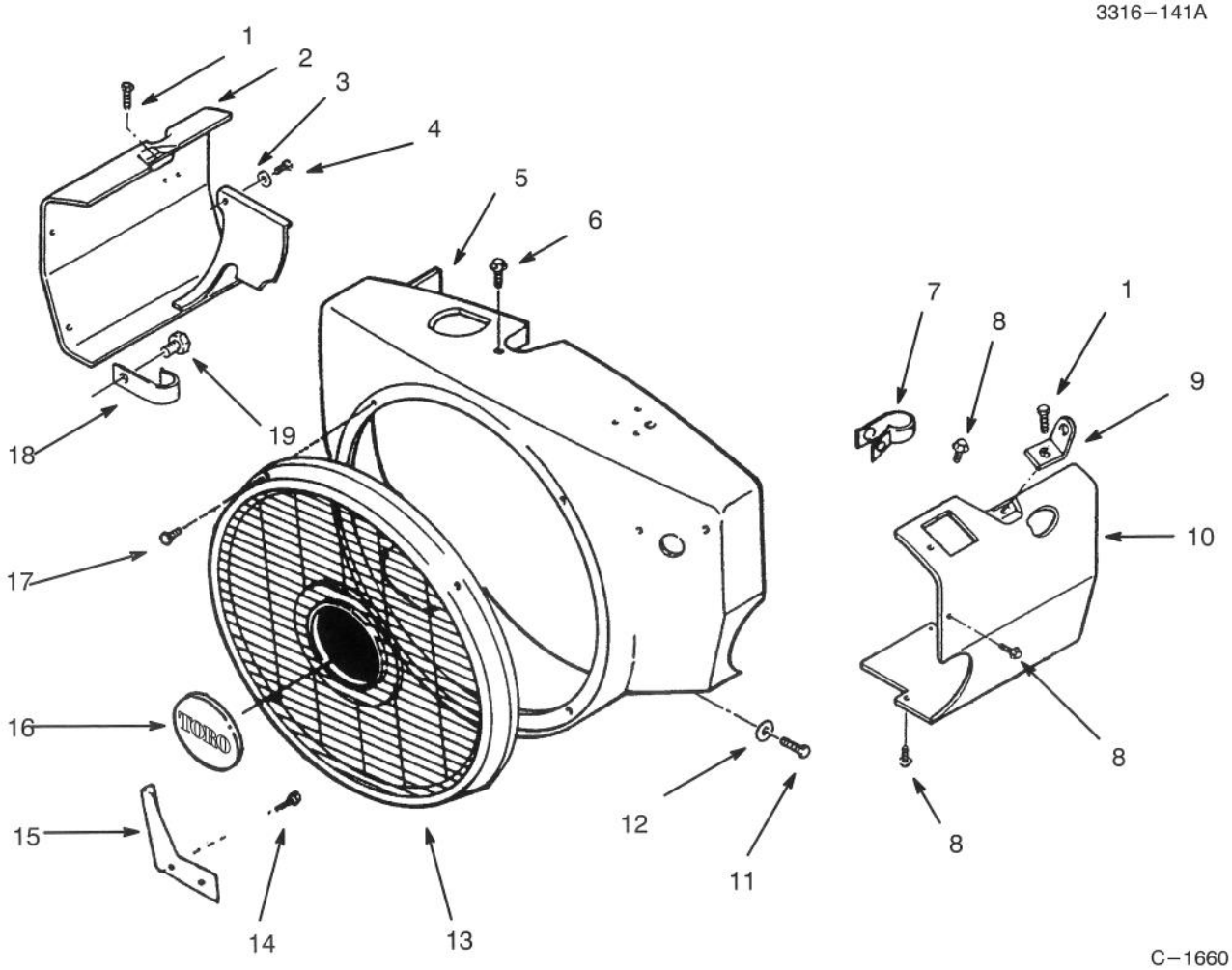

C–1660

BLOWER HOUSING

Ref. No.	Part No.	Description	No. Used
1	82–1600	Screw	2
2	92–0920	Housing – Cylinder Air, L.H.	1
3	NN10393	Washer	1
4	59–0980	Screw	1
5	NN10862	Housing – Blower	1
6	59–0970	Screw	1
7	NN10289	Clamp	1
8	NN10414	Screw	4
9	NN10296	Bracket – Lifting	2
10	92–0921	Housing – Cylinder Air, R.H.	1

Ref. No.	Part No.	Description	No. Used
11	NN10393	Screw	4
12	NN10356	Washer – Flat	1
13	82–0620	Guard – Stationary	1
14	82–0930	Screw	2
15	NN10832	Bracket	1
16	118530	Name Plate – Toro	1
17	82–1590	Screw	4
18	NN10348	Clip – Wire	1
19	82–1540	Screw	1

CYLINDER BLOCK

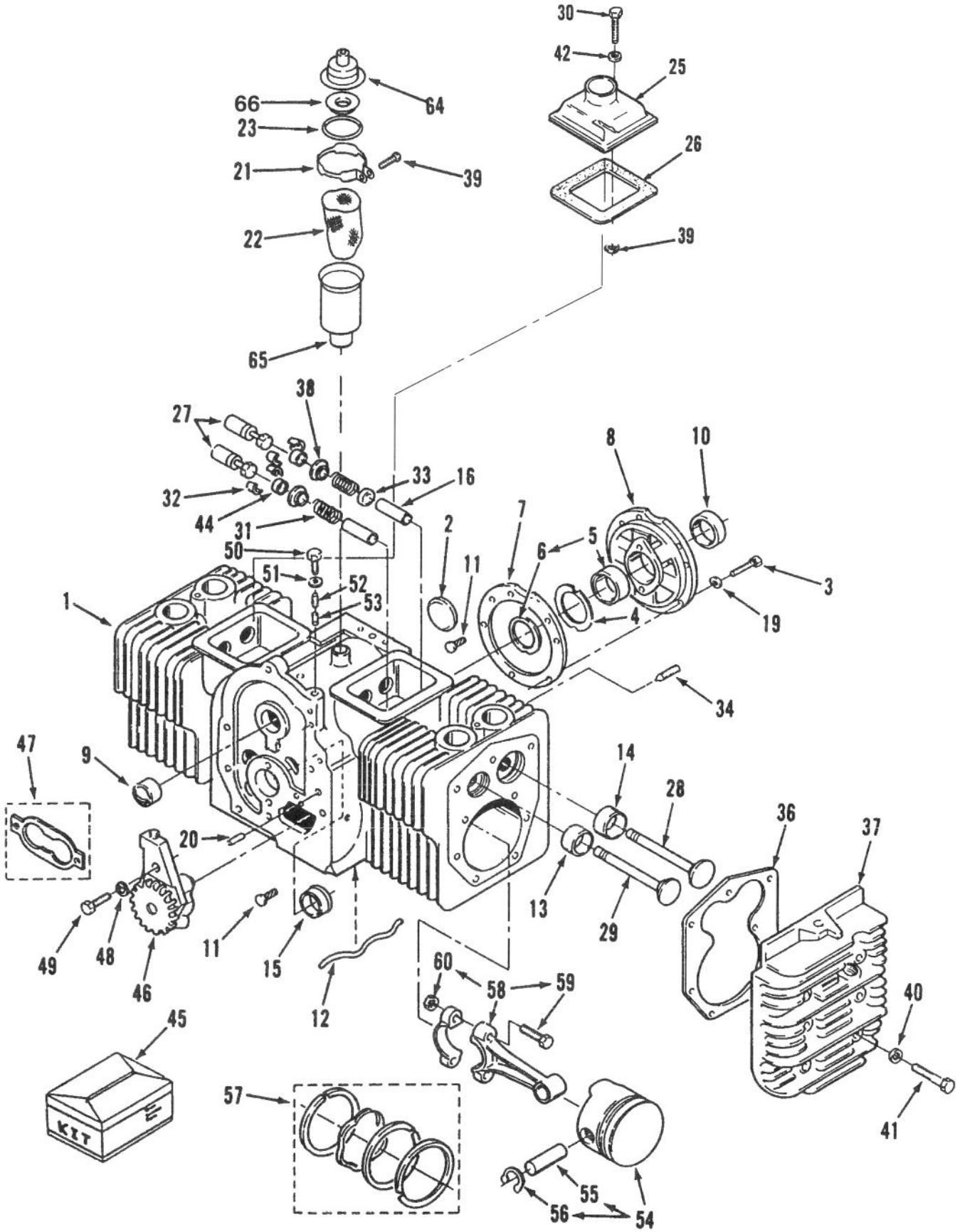

C–1661

CYLINDER BLOCK

Ref. No.	Part No.	Description	No. Used
1	92–0900	Block – Short	1
2	57–9690	Plug	1
3	59–0880	Bolt	5
4	57–8170	Shim 0.005"	A/R
5	57–8050	Bearing – Crankshaft, Rear, Standard	1
	NN10010	Bearing – Crankshaft, Rear .002" Under	1
	57–8060	Bearing – Crankshaft, Rear .010" Under	1
	NN10012	Bearing – Crankshaft, Rear .020" Under	1
	NN10013	Bearing – Crankshaft, Rear .030" Under	1
6	57–8160	Washer – Thrust	2
7	NN10554	Gasket	1
8	82–0020	Plate – Bearing	1
9	57–8160	Bearing – Camshaft	2
10	57–8000	Seal – Oil	1
11	NN10334	Pin – Stop	4
12	59–0290	Tube – Oil	1
13	NN10054	Insert – Exhaust Seat, Std.	2
	NN10055	Insert – Exhaust Seat .002" O.S	2
	NN10056	Insert – Exhaust Seat .005 O.S	2
	NN10057	Insert – Exhaust Seat .010" O.S	2
	NN10058	Insert – Exhaust Seat .025" O.S	2
14	NN10035	Insert – Intake Seat, Std.	2
	NN10036	Insert – Intake Seat .002" O.S	2
	NN10037	Insert – Intake Seat .005" O.S	2
	NN10038	Insert – Intake Seat .010" O.S	2
	NN10039	Insert – Intake Seat .025" O.S	2
15	NN10003	Bearing – Crankshaft, Front Standard	1
	NN10004	Bearing – Crankshaft, Front .002" Under	1
	NN10005	Bearing – Crankshaft, Front .010" Under	1
	NN10006	Bearing – Crankshaft, Front .020" Under	1
	NN10007	Bearing – Crankshaft, Front .030" Under	1
16	NN10479	Guide – Exhaust Valve	2
	NN10478	Guide – Intake Valve	2
19	82–1640	Washer – Spring	5
20	NN10336	Pin	2
21	82–0530	Clamp	1
22	57–8580	Breather – Baffle	1
23	82–0570	Seal	1

Ref. No.	Part No.	Description	No. Used
25	NN10821	Cover – Valve	2
26	57–8280	Gasket	2
27	NN10129	Tappet – Std.	4
	NN10130	Tappet .002" O.S	4
	NN10131	Tappet .004" O.S	4
28	NN10075	Valve – Intake	2
29	NN10075	Valve – Exhaust	2
30	NN10370	Bolt	2
31	NN10077	Spring	4
32	NN10082	Lock – Spring	8
33	NN10326	Seal	2
34	NN10385	Screw	2
36	NN10070	Gasket	2
37	NN10080	Head – Right Cylinder	1
	NN10079	Head – Left Cylinder	1
38	NN10078	Washer	4
39	82–1480	Screw	1
40	57–9770	Washer – Flat	18
41	NN10381	Bolt – Special	10
42	NN10359	Washer	2
44	71–5830	Cap – Valve	4
45	71–6290	Kit – Engine Gasket Valve Grind/Carbon Removal	1
46	NN10136	Pump – Oil, Complete	1
47	NN10134	Pump – Oil, Gasket Kit	1
48	82–1340	Washer – Flat	2
49	87–1370	Bolt	2
50	59–0910	Bolt	1
51	NN10361	Washer	1
52	NN10133	Spring	1
53	NN10135	Plunger	1
54	92–0901	Piston Pin & Retaining Rings STD	2
*	92–0902	Piston Pin & Retaining Rings .010"	2
*	92–0903	Piston Pin & Retaining Rings .020"	2
*	92–0904	Piston Pin & Retaining Rings .030"	2
55	NN10100	Piston Pin	2
56	NN10345	Retaining Ring	4
57	92–0905	Set – Piston Ring, Std.	2
	92–0906	Set – Piston Ring .005" O.S.	2
	92–0907	Set – Piston Ring .010" O.S	2
	92–0908	Set – Piston Ring .020" O.S	2
	92–0909	Set – Piston Ring .030" O.S	2
58	NN10125	Rod w/Bolts & Nuts – STD	2
	NN10126	Rod w/Bolts & Nuts – .010"	2
	NN10127	Rod w/Bolts & Nuts – .020"	2
	NN10128	Rod w/Bolts & Nuts – .030"	2
59	NN10120	Bolt – Special Rod	4
60	NN10428	Nut	4
64	82–0550	Breather Cap & Valve	1
65	82–0540	Tube – Baffle Breather	1
66	82–0560	Screen	2

*Not Illustrated

CRANKSHAFT, CAMSHAFT, FLYWHEEL

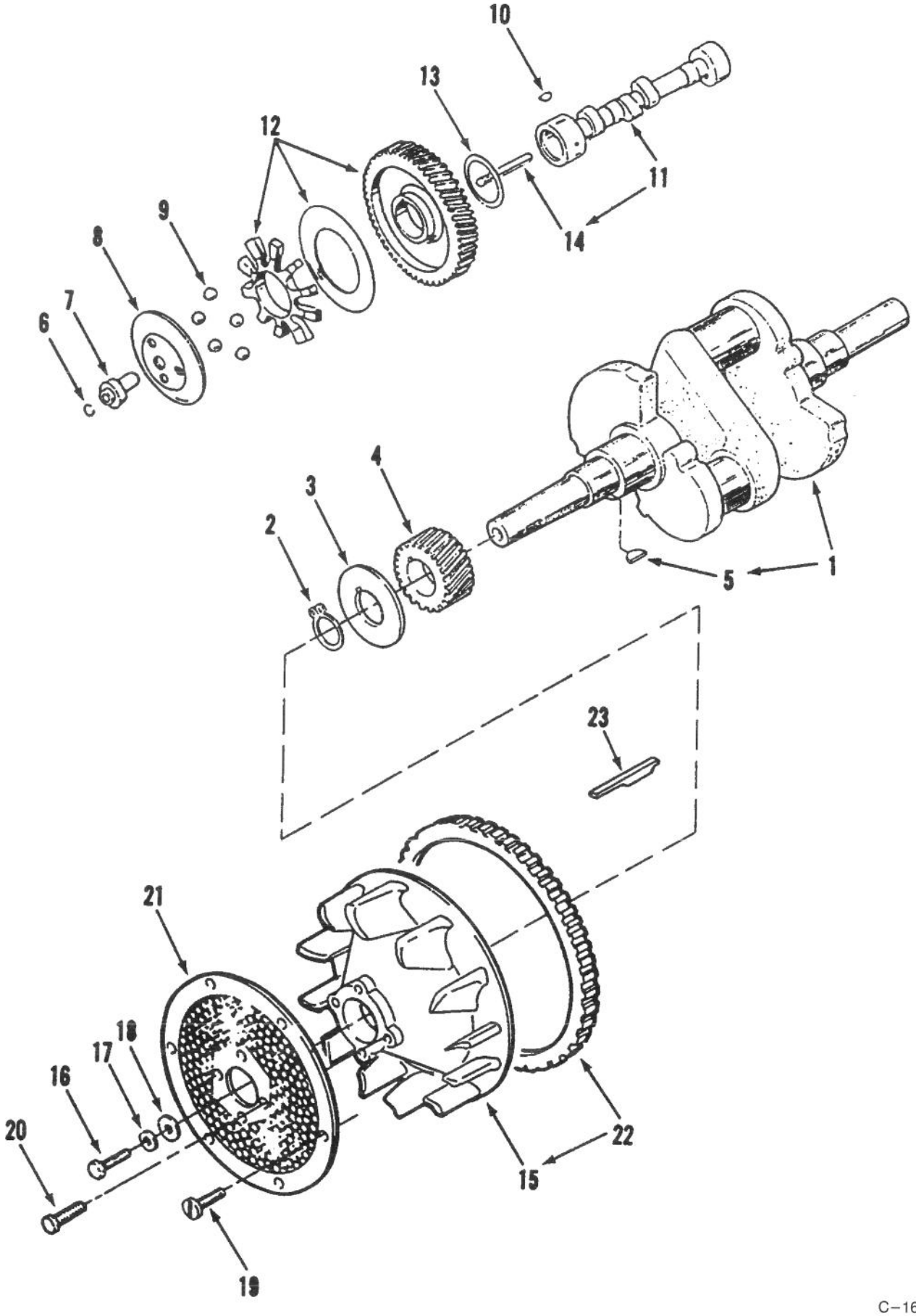

C–1662

CRANKSHAFT, CAMSHAFT, FLYWHEEL

Ref. No.	Part No.	Description	No. Used
1	NN10853	Crankshaft	1
2	57–9710	Ring – Retaining	1
3	NN10439	Washer	1
4	NN10438	Gear	1
5	NN10330	Key	1
6	NN10215	Ring – Retaining	1
7	NN10221	Hub – Governor Cup	1
8	NN10222	Cup – Governor	1
9	57–9640	Ball	1
10	57–9660	Key	1
11	NN10032	Camshaft (Incl. Item 13)	1
12	57–8210	Camshaft Gear (Incl. Gear, Spacer, & Plate)	1
13	NN10030	Washer	1
14	NN10214	Pin	1
15	NN10171	Flywheel (Incl. Ring Gear)	1
16	NN10021	Screw	1
17	82–1320	Washer	1
18	NN10355	Washer	1
19	NN10409	Screw	6
20	82–1400	Screw	4
21	79–6440	Screen	1
22	57–8180	Gear – Ring	1
23	82–1150	Key	1

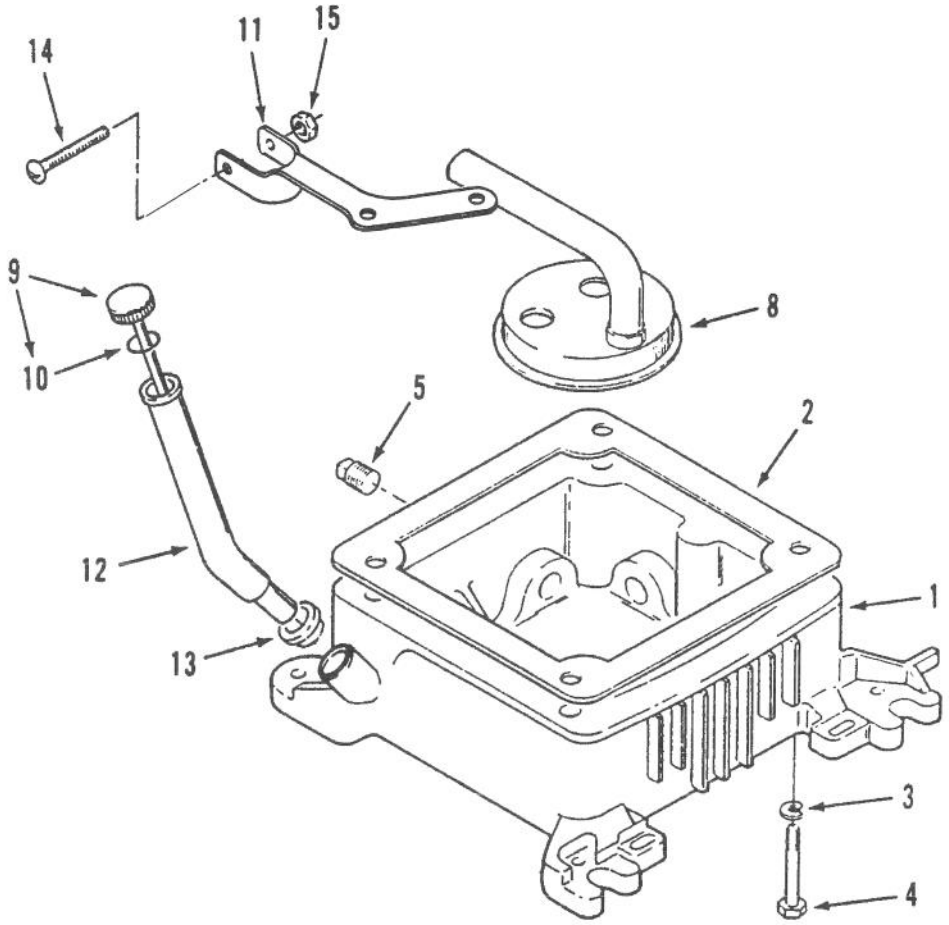

C–1663

OIL BASE AND FILL TUBE AND BRACKET

Ref. No.	Part No.	Description	No. Used
1	NN10018	Base – Oil (Incl. All Plugs & Plug Gasket)	1
2	57–8090	Gasket	1
3	82–1310	Washer – Lock	4
4	NN10379	Screw	4
5	82–1130	Plug – Sq Hd	2
8	NN10138	Cup – Oil Pump Intake	1
9	NN10159	Cap – Oil Fill & Indicator (Incl. "O"Ring)	1

Ref. No.	Part No.	Description	No. Used
10	NN10323	Ring – Oil	1
11	79–6460	Bracket	1
12	NN10854	Tube – Oil Fill, Chrome	1
13	NN10690	Seal	1
14	82–1560	Screw	1
15	82–1700	Nut – Speed	1

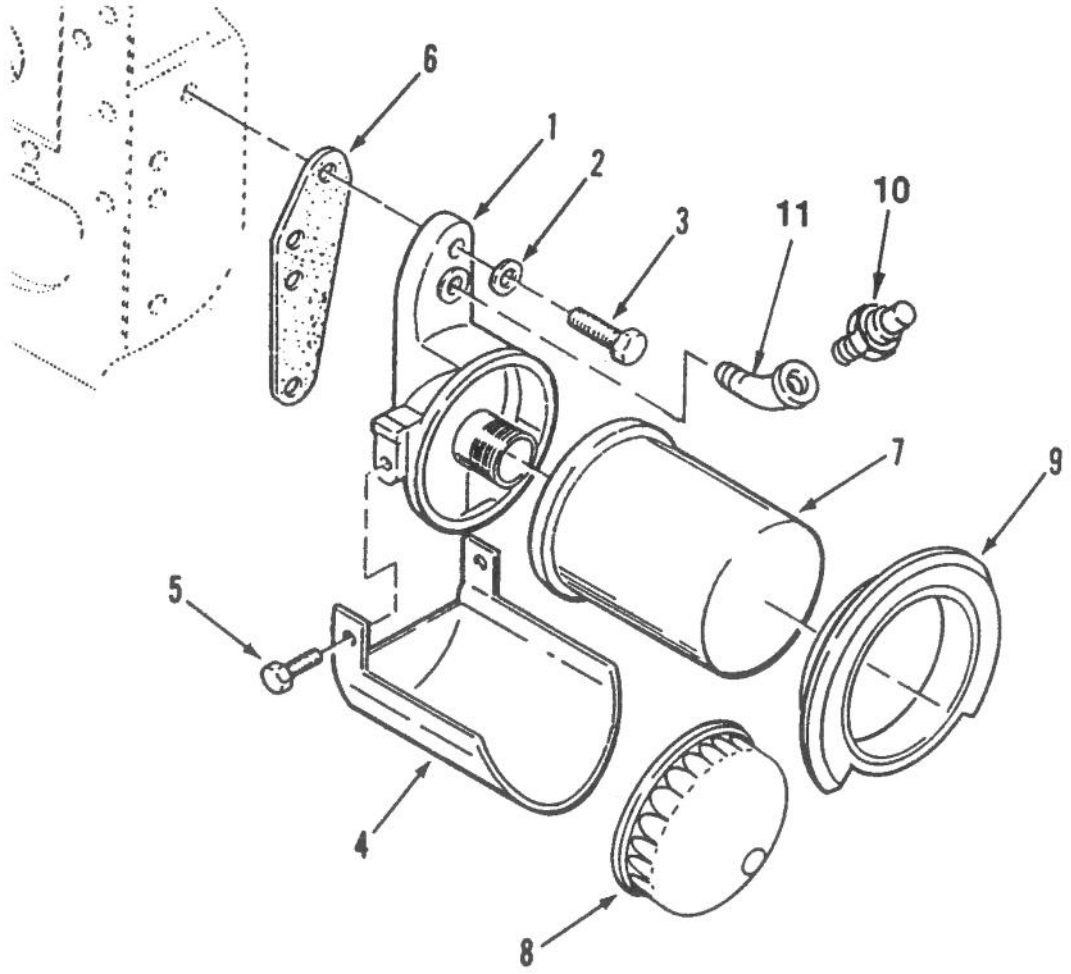

C–1664

OIL FILTER

Ref. No.	Part No.	Description	No. Used
1	82–0500	Adapter – Oil Filter	1
2	57–9750	Washer	2
3	NN10373	Screw	2
4	NN10894	Drain – Oil Filter	1
5	82–1510	Screw	2
6	79–6470	Gasket	1

Ref. No.	Part No.	Description	No. Used
7	NN10143	Filter – Oil	1
8	NN10465	Wrench	1
9	82–0680	Gasket	1
10	NN10824	Switch – Oil Pressure	1
11	92–0912	Elbow 45°	1

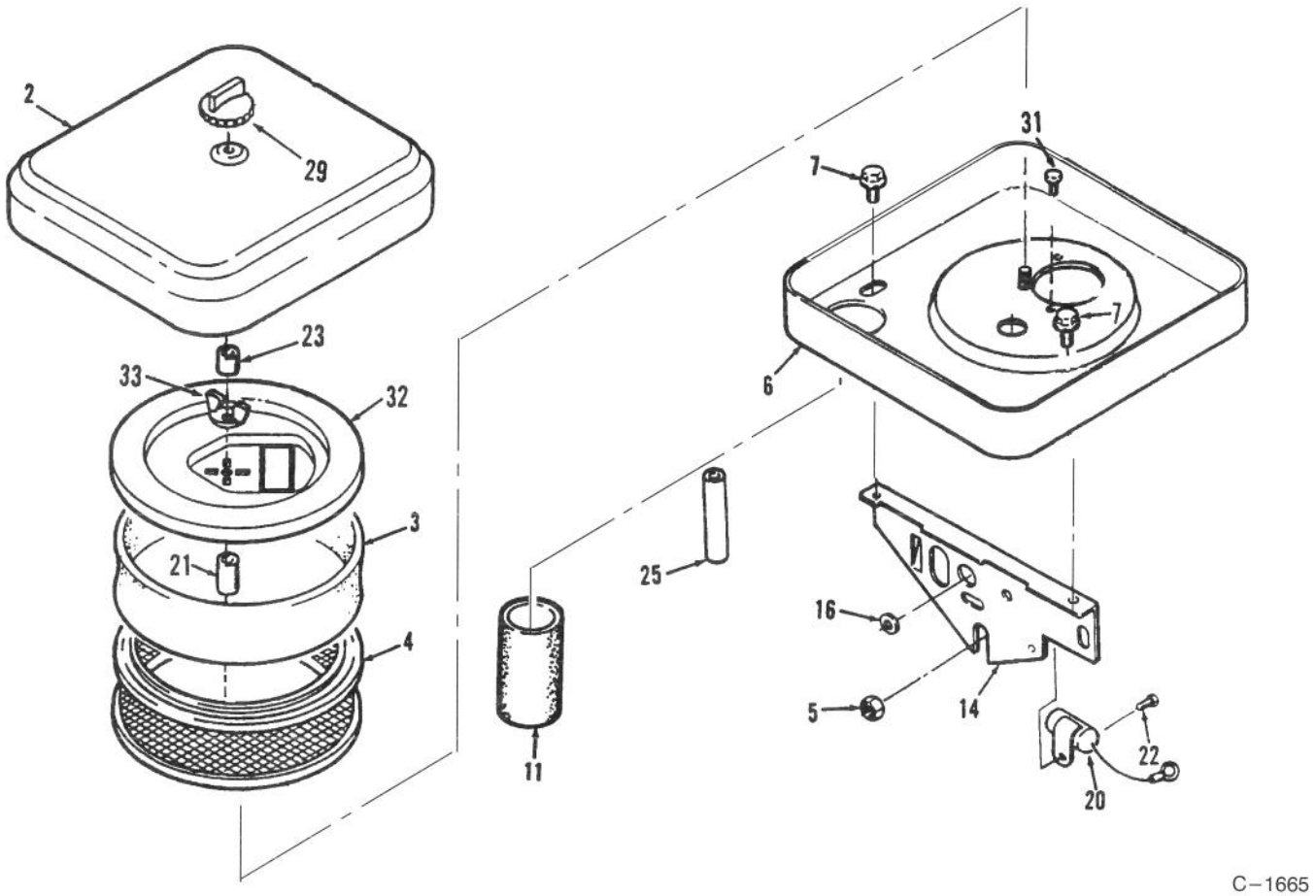

C–1665

AIR CLEANER

Ref. No.	Part No.	Description	No. Used
2	79–6320	Cover – Air Cleaner	1
3	NN10176	Element – Foam	1
4	NN10174	Element – Air Cleaner	1
5	82–1690	Nut – Flange	1
6	79–6330	Housing – Air Cleaner	1
7	82–1550	Screw – Hex. Hd	.2
11	NN10187	Tube – Air Intake	1
14	79–6340	Support – Air Cleaner	1
16	NN10309	Grommet	1

Ref. No.	Part No.	Description	No. Used
20	NN0980	Capacitor (300 VD)	1
22	NN10390	Screw – Hex. Hd.	1
23	79–6520	Spacer	1
25	92–0917	Tube	1
29	79–6350	Knob – Tool less	1
31	92–0915	Screw	1
32	92–0914	Cover – Element	1
33	92–0913	Nut – Wing	1

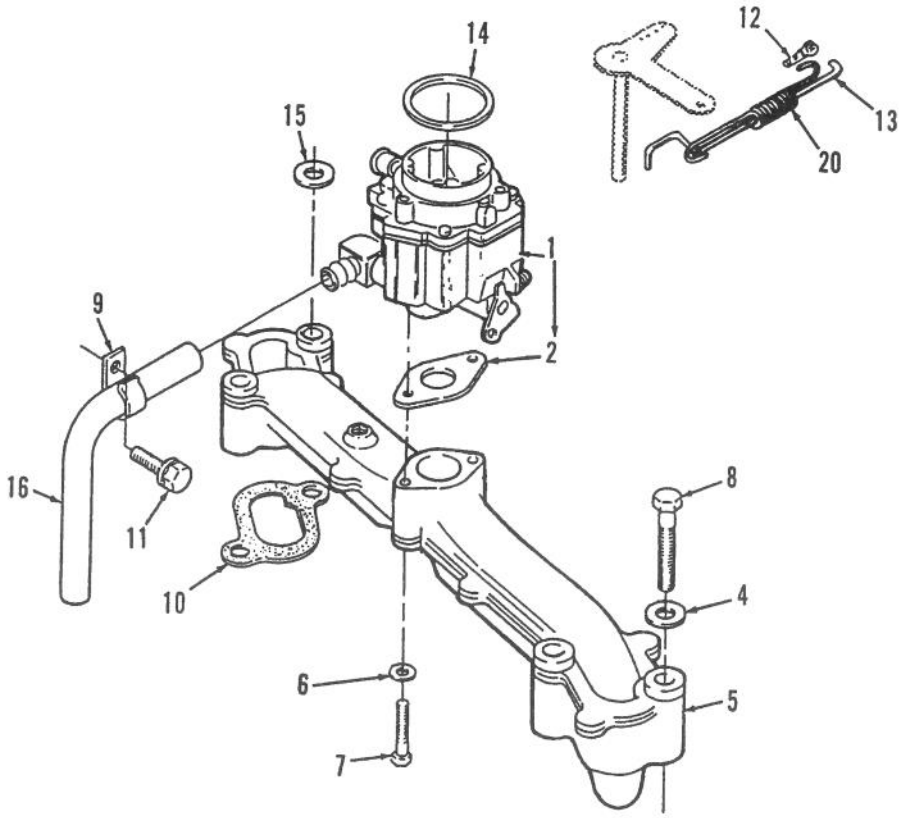

C–1666

INTAKE MANIFOLD

Ref. No.	Part No.	Description	No. Used
1	NN10504	Carburetor (Incl. Mounting Gasket, Elbow, & "O"Ring)	1
2	72–0850	Gasket	1
4	82–1350	Washer – Flat	4
5	92–0918	Manifold – Intake	1
6	82–1410	Washer – Flat	2
7	82–1410	Screw – Hex. Hd.	2
8	NN10375	Screw – Hex. Hd.	4
9	NN10348	Clip – Fuel Line	1

Ref. No.	Part No.	Description	No. Used
10	71–5980	Gasket	2
11	82–1450	Screw	2
12	57–9700	Clip – Retaining, Rod to Carburetor	1
13	92–0919	Rod – Governor Control	1
14	57–9620	"O"Ring	1
15	NN10362	Washer – Flat	1
16	NN10858	Hose – Fuel	1
20	NN10877	Spring – Governor Rod	1

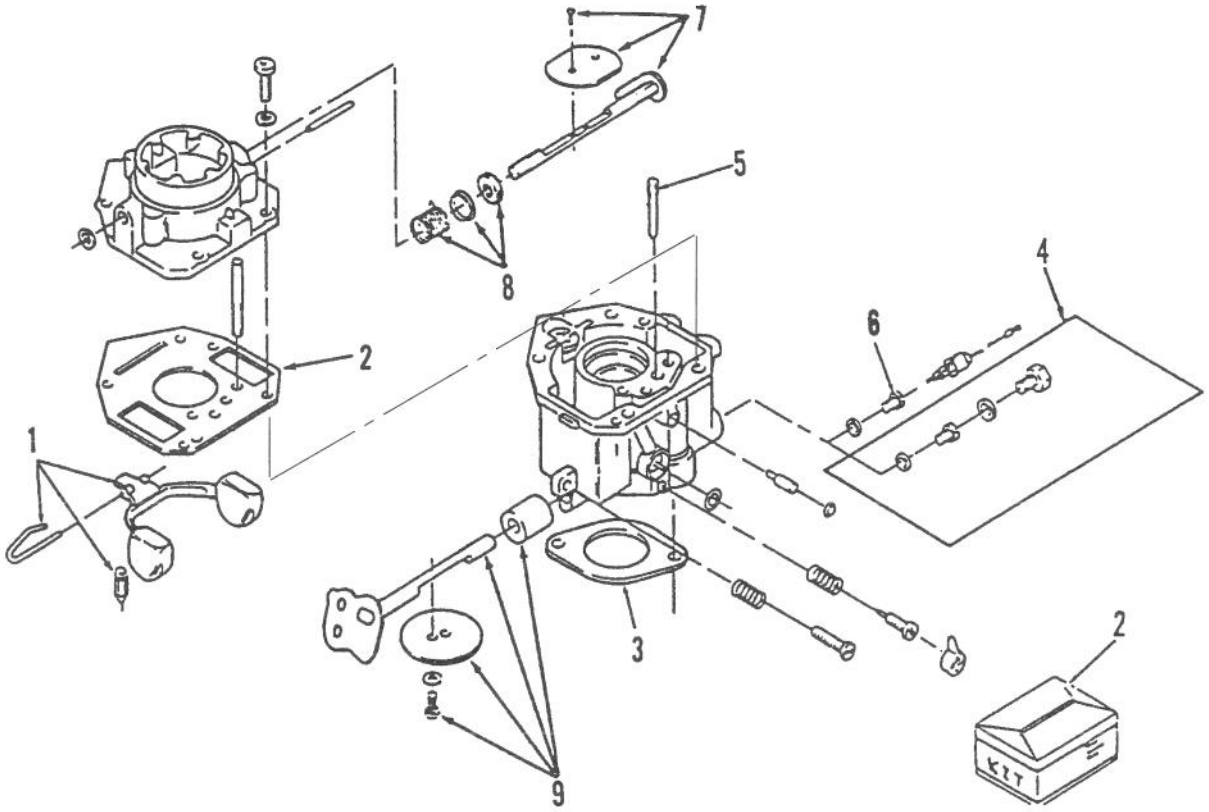

C–1667

CARBURETOR

Ref. No.	Part No.	Description	No. Used
1	NN10209	Kit – Float (Incl. Float, Pin, & Valve)	1
2	82–0780	Kit – Repair (Incl. Screw & Plug Package, Gasket Package, Float Valve, Idle Adjustment Needle & Spring, Mounting Gaskets, & Idle Limit Cap)	1
3	82–0850	Gasket – Carburetor Mtg. Jet (Power–Fixed & Opt. High Altitude)	1
4	NN10810	Kit – Fixed Jet	1

Ref. No.	Part No.	Description	No. Used
5	NN10201	Jet – Idle	1
6	NN10199	Jet – Power	1
7	NN10207	Kit – Choke Shaft (Incl. Choke Valve, Valve Screw – Set, & Air Filter)	1
8	NN10809	Kit – Choke Lever (Incl. Choke Lever Ring, Choke Spring, & Choke Collar)	1
9	NN10811	Kit – Throttle Shaft (Incl. Valve Screw – Set, Air Filter, & Throttle Valve)	1

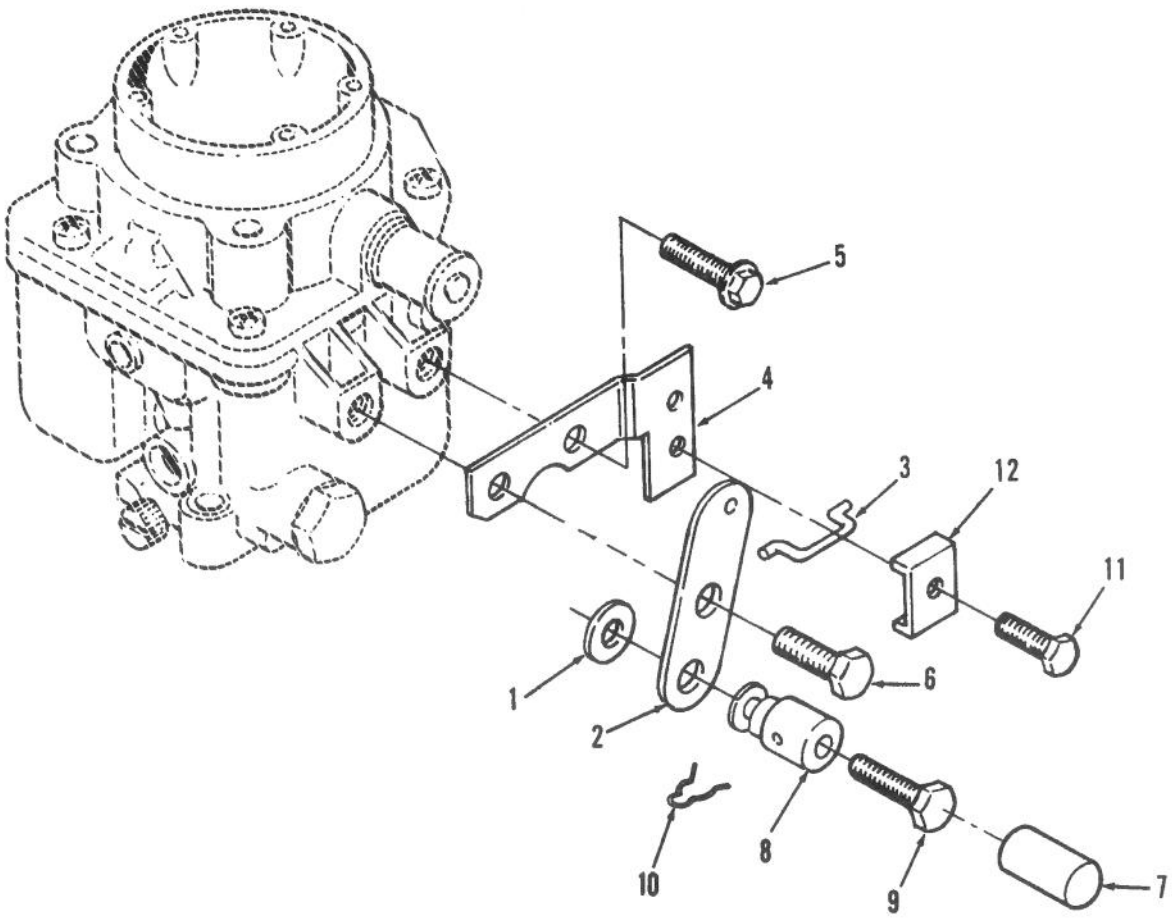

C–1668

CHOKE LINKAGE

Ref. No.	Part No.	Description	No. Used
1	59–0850	Washer	2
2	59–0460	Lever – Choke	1
3	57–9180	Link – Choke	1
4	59–0470	Bracket	1
5	NN10412	Screw	1
6	92–0916	Screw	1

Ref. No.	Part No.	Description	No. Used
7	NN10830	Plug	1
8	57–9170	Swivel – Choke Lever	1
9	NN10410	Screw	1
10	59–0720	Pin – Cotter	1
11	NN10784	Screw	1
12	57–9190	Clip	1

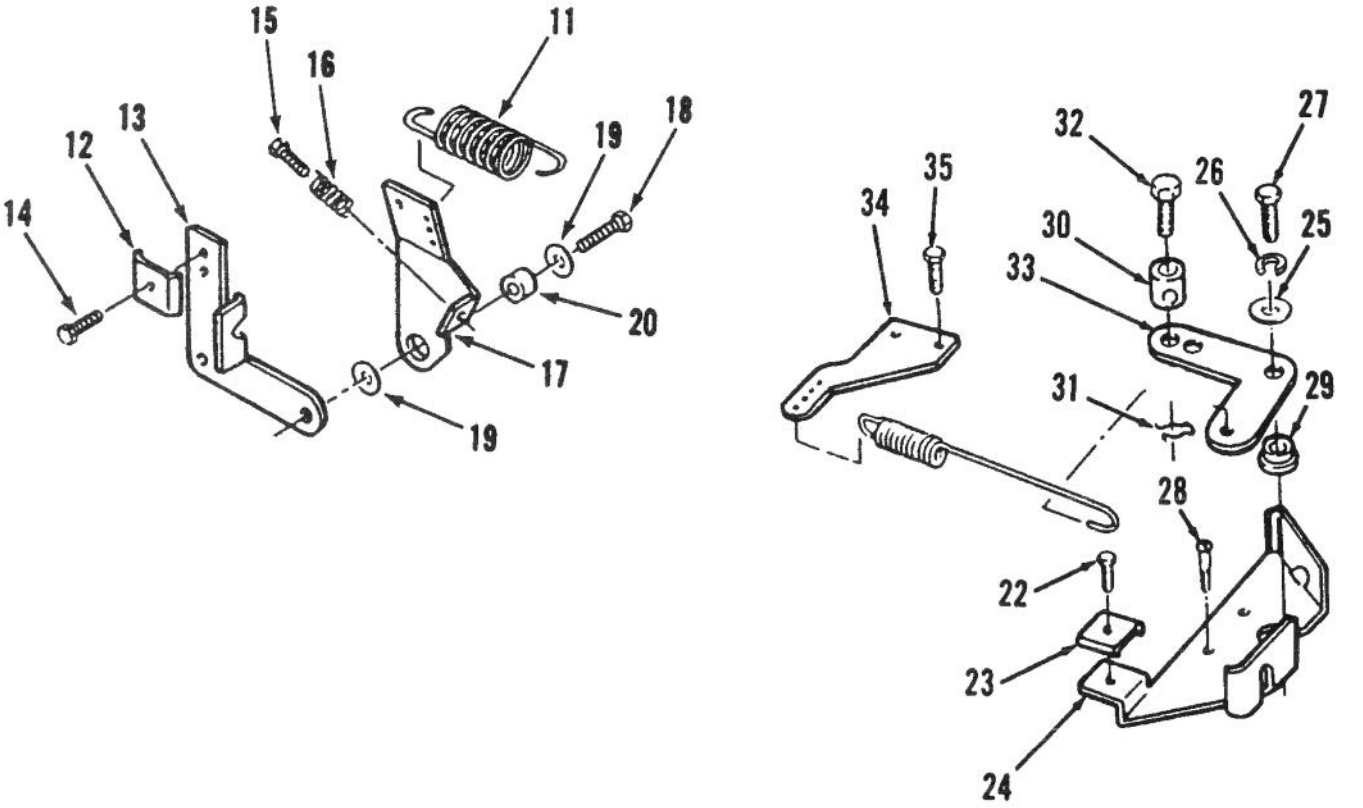

C–1669

GOVERNOR

Ref. No.	Part No.	Description	No. Used
11	NN10217	Spring – Governor, 5 Ball	1
12	57–9190	Clamp – Cable	1
13	79–6360	Bracket	1
14	NN10395	Screw	1
15	59–1030	Screw	1
16	NN10219	Spring	1
17	92–0922	Arm – Governor Control, w/o Swivel	1
18	59–1100	Screw	2
19	NN10357	Washer – Flat	1
20	NN10218	Bushing	1
22	59–1000	Screw	1
23	57–9190	Clamp – Throttle Cable	1

Ref. No.	Part No.	Description	No. Used
24	79–6390	Bracket – Governor Control	1
25	59–0830	Washer – Flat	1
26	82–1620	Washer – Lock	1
27	82–1370	Screw	1
28	201327	Screw	3
29	79–6400	Bushing – Governor Control	1
30	NN10320	Swivel – Throttle Control	1
31	59–0720	Pin – Cotter	1
32	NN10410	Screw – Machine	1
33	79–6410	Link – Governor Control	1
34	79–6420	Adapter – Governor Arm	1
35	59–1050	Screw	2

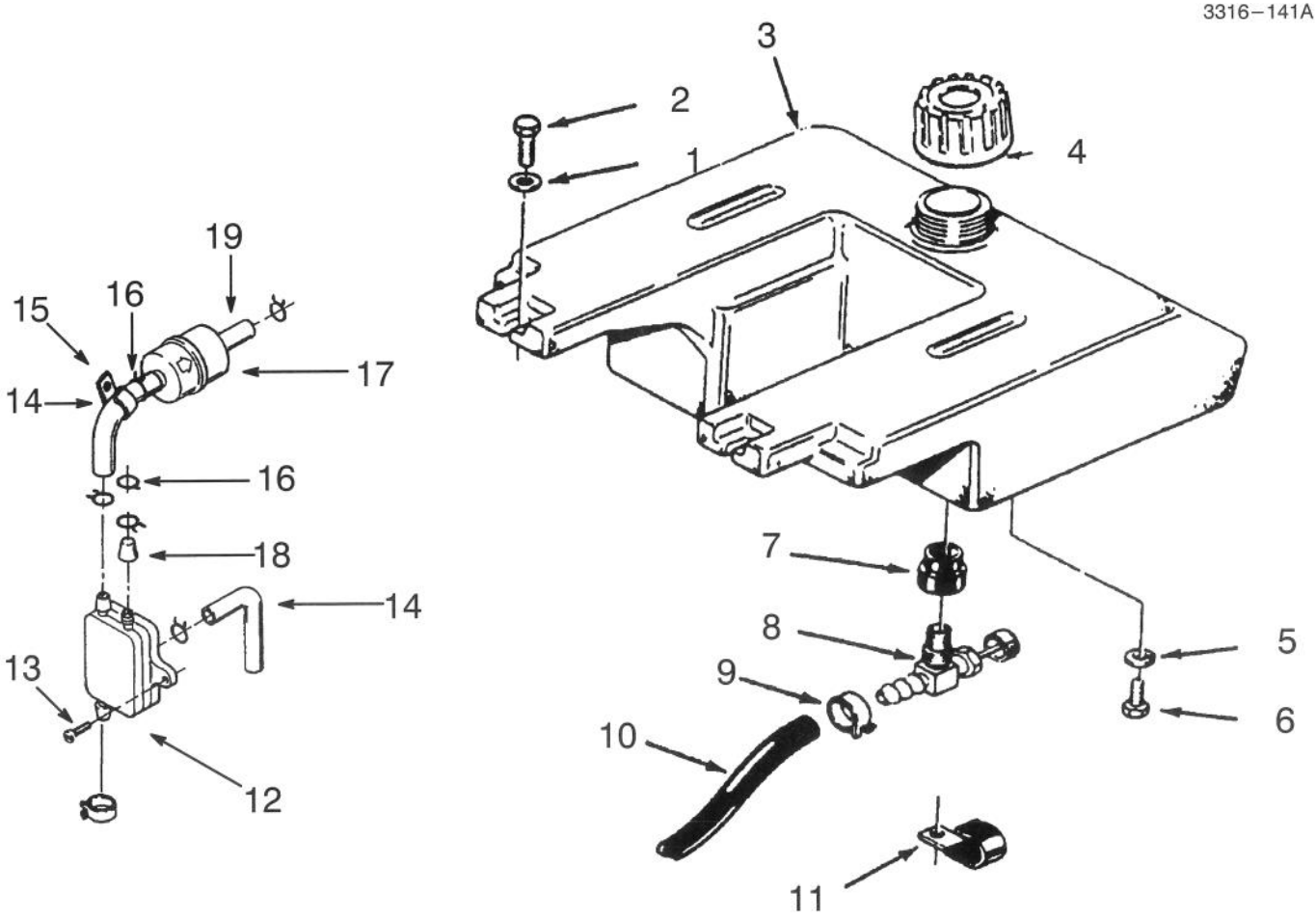

C–1647

FUEL SYSTEM

Ref. No.	Part No.	Description	No. Used
1	3256–4	Washer	2
2	926697	Bolt	2
3	106234	Tank – Fuel (Incl. Ref.# 5 & 7)	1
4	55–3570	Cap – Fuel	1
5	3253–4	Washer – Lock	1
6	322–2	Bolt	3
7	104047	Bushing	1
8	104048	Valve – Fuel Shut–Off	1
9	108898	Clamp	2

Ref. No.	Part No.	Description	No. Used
10	103787	Line – Fuel 50”	1
11	950154	Clamp	2
12	57–9080	Pump – Fuel	1
13	59–1050	Screw	1
14	NN10302	Line – Fuel 12”	2
15	NN10348	Clip – Wire	1
16	82–1080	Clamp – Hose 1/2	6
17	NN10506	Filter – Fuel	1
18	59–0370	Cap – Fuel Fitting	1
19	92–0923	Hose – Fuel	1

GEARCASE AND IGNITION CONTROLS

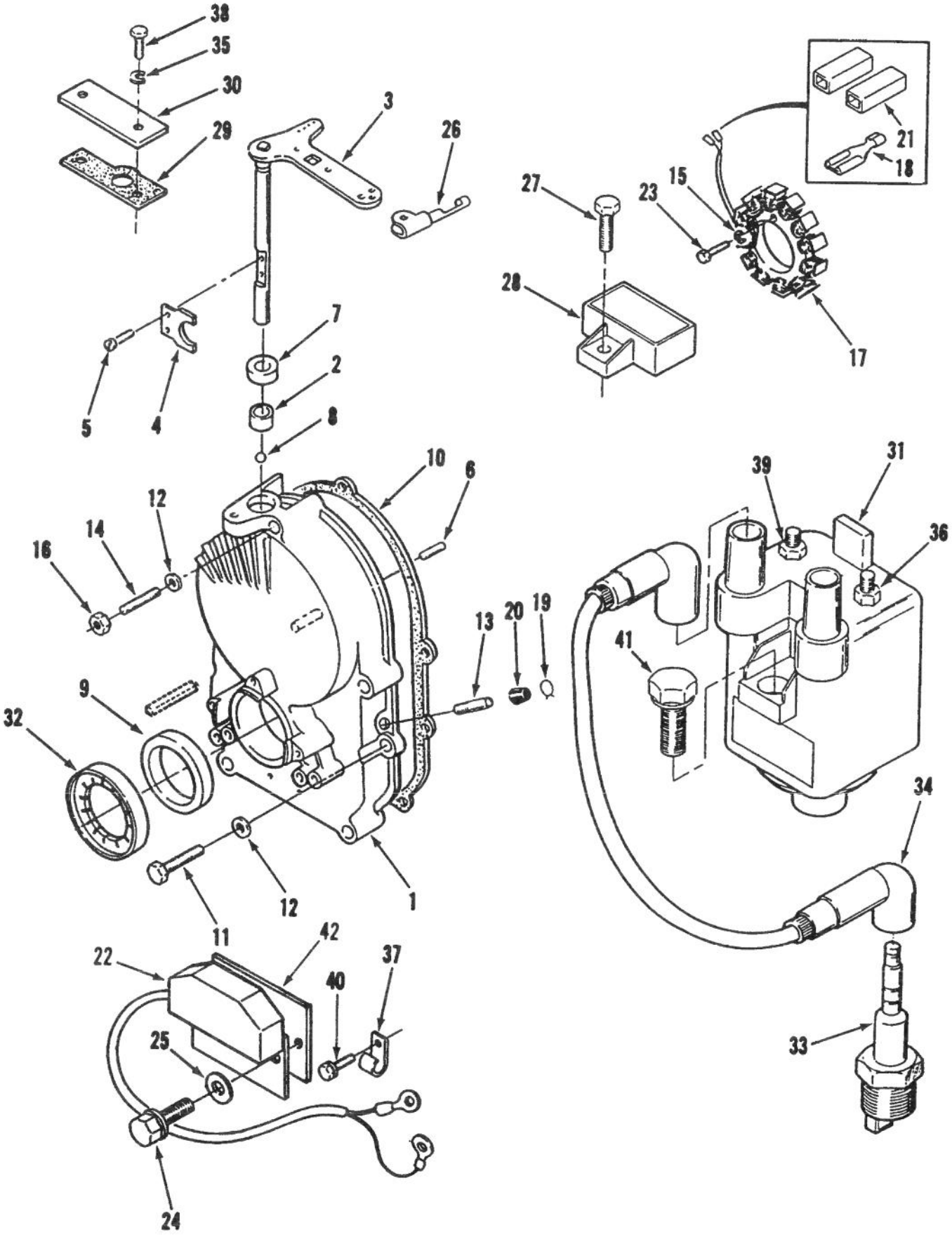

C–1670

GEARCASE AND IGNITION CONTROLS

Ref. No.	Part No.	Description	No. Used
1	NN10825	Kit – Gearcase (Incl. Ref.# 2–9, 13, 19, & 20)	1
2	57–9650	Bearing	1
3	NN10826	Governor Shaft & Arm–Chromed	1
4	59–0420	Yoke	1
5	59–0950	Screw	1
6	NN10335	Pin – Dowel	1
7	57–9570	Seal – Oil	1
8	NN10327	Bearing	1
9	57–9580	Seal – Oil	1
10	NN10895	Gasket	1
11	82–1410	Screw	4
12	57–9750	Washer	5
13	59–0360	Tube – Vacuum Port	1
14	NN10352	Stud – Gear Cover	1
15	3253–2	Washer – Lock	3
16	NN10426	Nut	1
17	NN10518	Stator w/Terminals	1
18	NN10290	Terminal – Stator Leads	3
19	57–9550	Clamp	1
20	59–0370	Cap	1
21	82–1000	Kit – Terminal Connector Body	1
22	NN10444	Control – Ignition	1
23	82–1500	Screw – Hex. Hd.	3
24	NN10394	Screw – Hex. Hd.	2
25	82–1660	Washer – Lock	2
26	57–9730	Clip – Retaining	1
27	NN10414	Screw – Hex. Hd	1
28	NN10261	Regulator – Voltage 20 amp	1
29	79–6490	Gasket – Plate	1
30	NN10515	Cover – Ignition Plunger	1
31	NN10245	Battery Ignition Coil	1
32	NN10247	Rotor – Ignition	1
33	57–9340	Plug – Spark	2
34	82–1340	Cable – Spark Plug	1
35	82–1340	Washer – Flat	2
36	NN10248	Nut	1
37	NN10348	Clip – Wire	1
38	82–1360	Screw – Hex. Hd	1
39	NN10249	Nut	1
40	82–1410	Screw – Hex. Hd.	1
41	NN10408	Screw – Hex. Hd.	2
42	NN10516	Indicator – Ignition Module	1

3316–141A

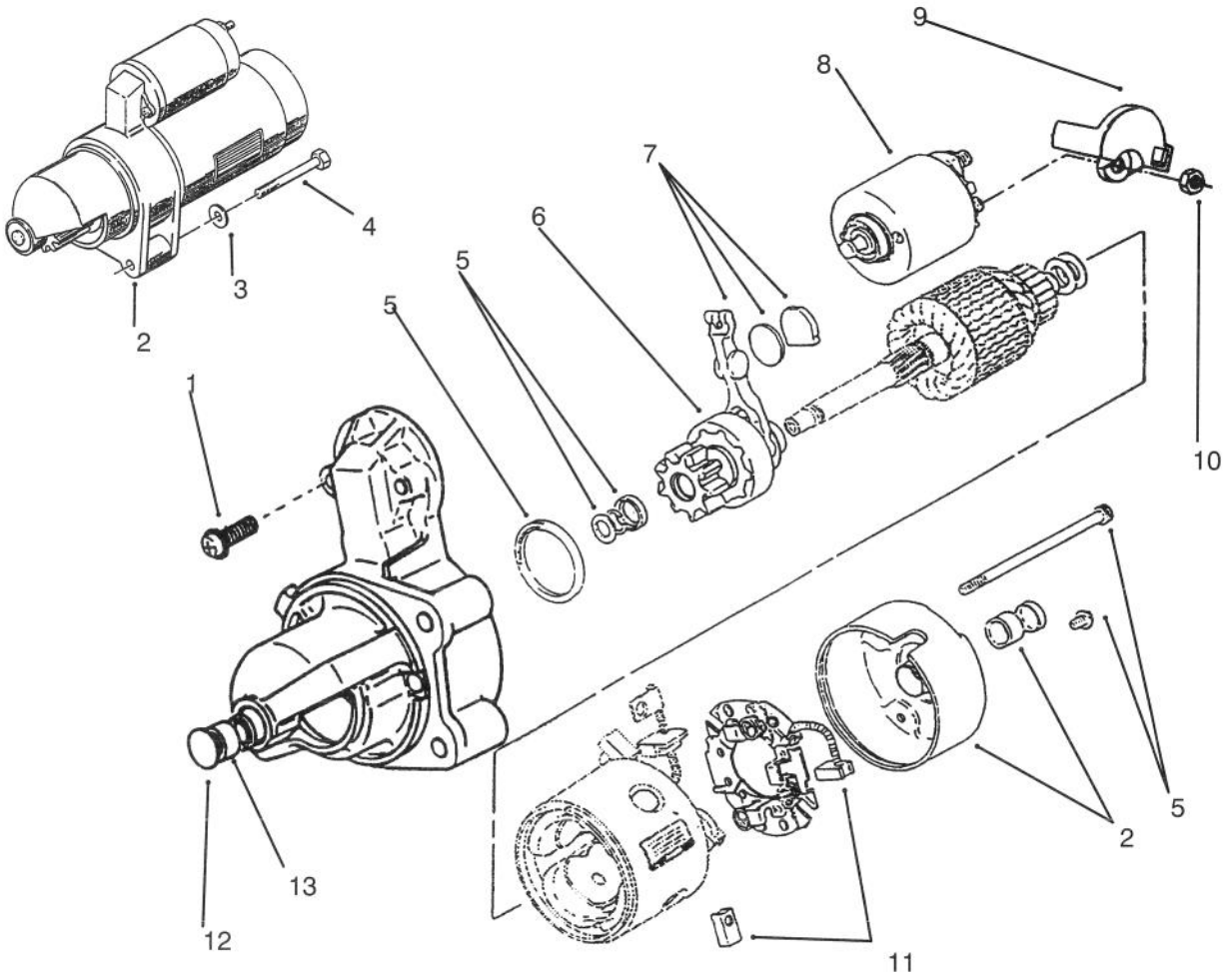

STARTER

Ref. No.	Part No.	Description	No. Used
1	NN10885	Starter Hdwr Kit (Incl. Solenoid Screws [2] Brush Holder Screws [2], Thru Bolts[2], Armature Shims [2], Pinion Stop Collar, & Pinion Retaining Ring)	1
2	71–6040	Starter, Complete – See Components Below	1
3	57–9770	Washer – Flat	2
4	79–6580	Screw – Cap	2
5	NN10886	Seal – Dust	1
6	NN10884	Clutch – Starter (Incl. Pinion Gear w/Clutch)	1
7	NN10266	Kit – Starter Shift Lever (Incl. Shift Lever, Wear Plate & Rubber Plug)	1
8	NN10887	Kit – Starter Solenoid (Incl. Solenoid, Spring, & Plunger)	1
9	NN10930	Cap – Starter Solenoid	1
10	NN10768	Nut	1
11	NN10883	Kit – Starter Brush (Incl. Positive Brush [2] & Negative Brush w/Pigtail)	1
12	62–2730	Kit – Bushing (Incl. Front Bushing & Rear Cap w/Bushing)	1
13	NN10929	Holder – Starter Brush (Incl. Brush Holder w/Negative Brush)	1

3316–141A

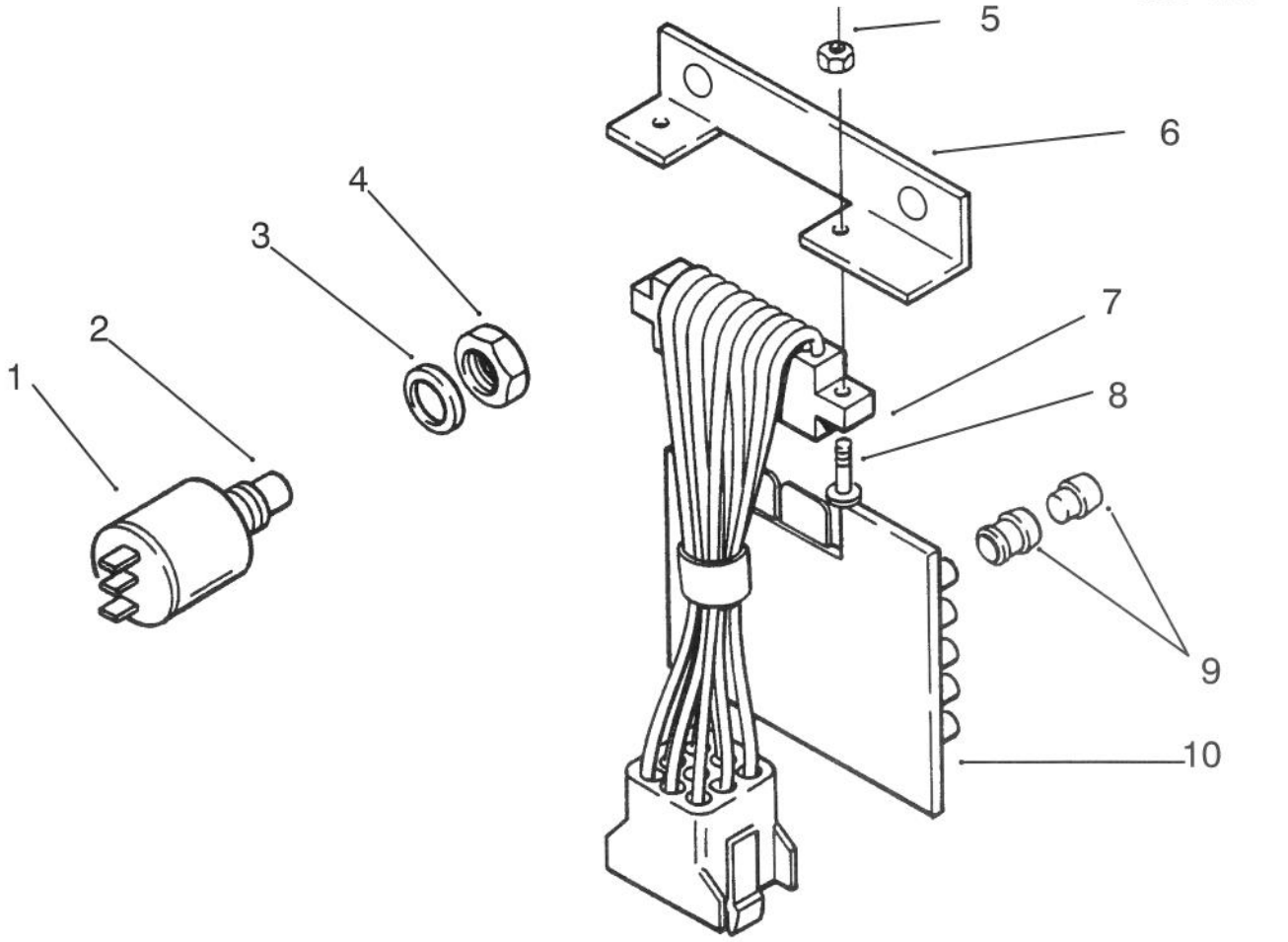

C–1497

ELECTRICAL SYSTEM

Ref. No.	Part No.	Description	No. Used
1	116796	Test Switch (Incl. Ref. #2–4)	1
2	117217	Button – Switch	1
3	111767	Washer	1
4	111359	Nut – Hex	1
5	9157324	Nut – Lock	2

Ref. No.	Part No.	Description	No. Used
6	112506	Bracket	1
7	117377	Harness – Wiring	1
8	9107562	Screw	2
9	111343	Bushing Assembly & Indicator Lens	5
10	114825	PC Board w/Lights	1

ELECTRICAL SYSTEM

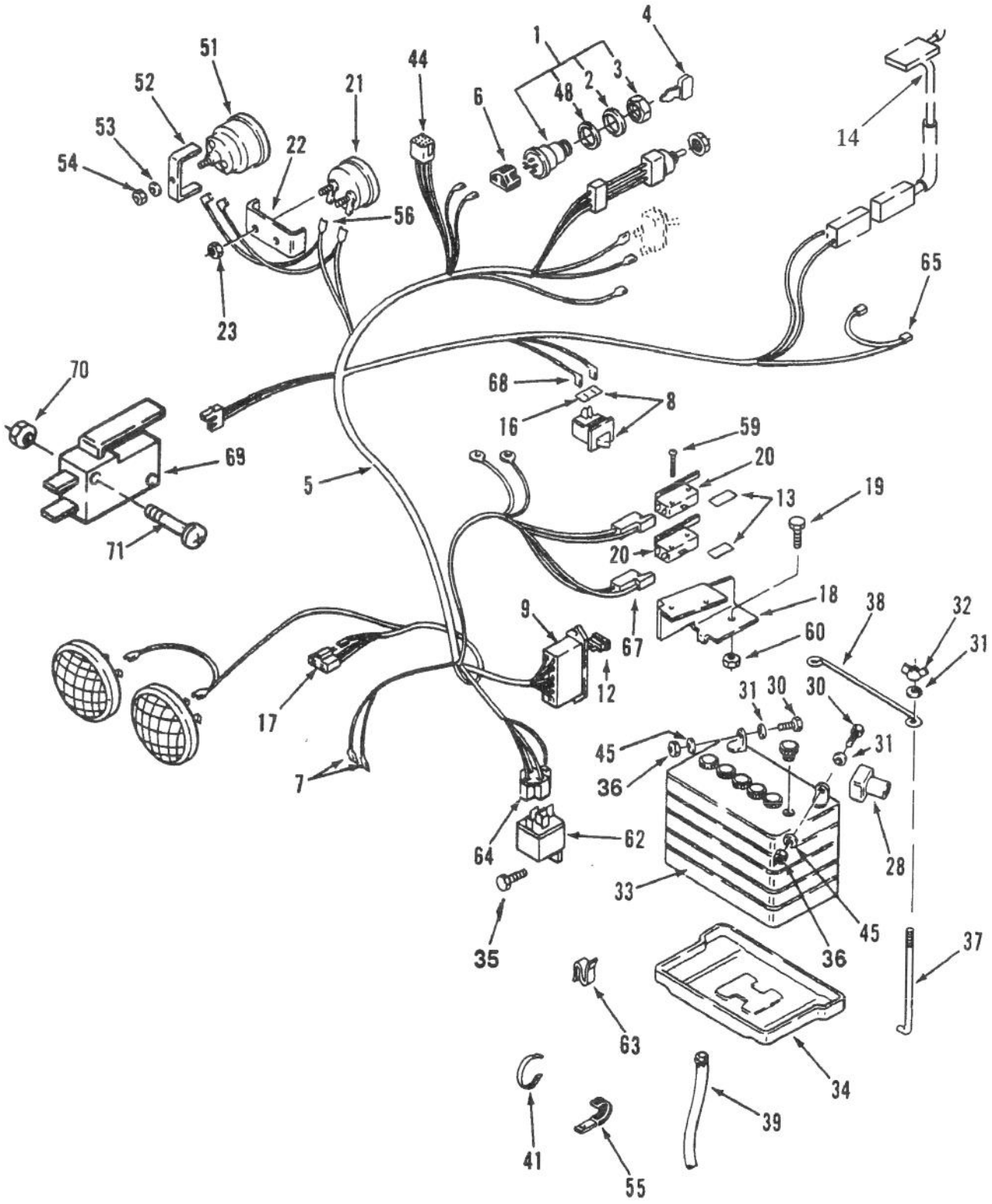

C–1657

ELECTRICAL SYSTEM

Ref. No.	Part No.	Description	No. Used
1	111216	Switch – Ignition	1
2	920160	Washer – Lock	1
3	101884	Nut – Special	1
4	62–7770	Key – Ignition, Padded	1
5	79–3600	Wiring Harness (Incl. Ref.# 6,7,9,17,44,65 & 68)	1
6	104926	Switch – Connector Body Ignition	1
7	518105	Terminal	1
8	103480	Switch – Clutch Interlock, (Incl. Ref.#16)	1
9	120930	Body – Fuse	1
12	109355	Fuse 15 Amp ATO or ATC	1
*	109102	Fuse 25 Amp ATO or ATC	1
*	NN10277	Fuse 30 Amp ATO or ATC	1
13	111642	Barrier – Switch Insulator	2
14	38–1420	Switch – Seat	1
16	110502	Shield – Dirt	1
17	112185	Body – Connector	1
18	115411	Support – Switch	1
19	926671	Bolt	1
20	111332	Switch – PTO Interlock	2
21	79–0060	Voltmeter	1
22	78–0080	Clamp – Voltmeter	1
23	5924	Nut	2
28	109553	Cover – Terminal	1
30	321–4	Bolt	2
31	3256–22	Washer	4

Ref. No.	Part No.	Description	No. Used
32	116497	Nut	4
33	105842	Battery	1
34	106948	Tray – Battery	1
35	910794	Screw	1
36	32146–7	Nut	2
37	113969	Hook – Battery Hold Down	2
38	113010	Hold Down – Battery	1
39	114720	Tube – Drain	1
41	100571	Tie – Cable	1
44	102651	Terminal	8
45	3253–3	Washer – Lock	4
48	920262	Washer – Special	1
51	78–0020	Meter – Hour (Incl. Ref.# 52–54)	1
52	114017	Clamp – Hour Meter	1
53	920120	Washer – Lock	1
54	915962	Nut – Hex	1
55	8830	Clip	1
59	910478	Screw	2
60	915732	Nut	2
62	116397	Relay	1
63	519337	Clip – Cable	1
64	518105	Terminal	1
65	6921	Terminal	1
68	518077	Terminal	2
69	111332	Switch – Parking Brake	1
70	915732	Nut – Hex	2
71	910948	Screw	2

*Not Illustrated

ELECTRICAL SYSTEM

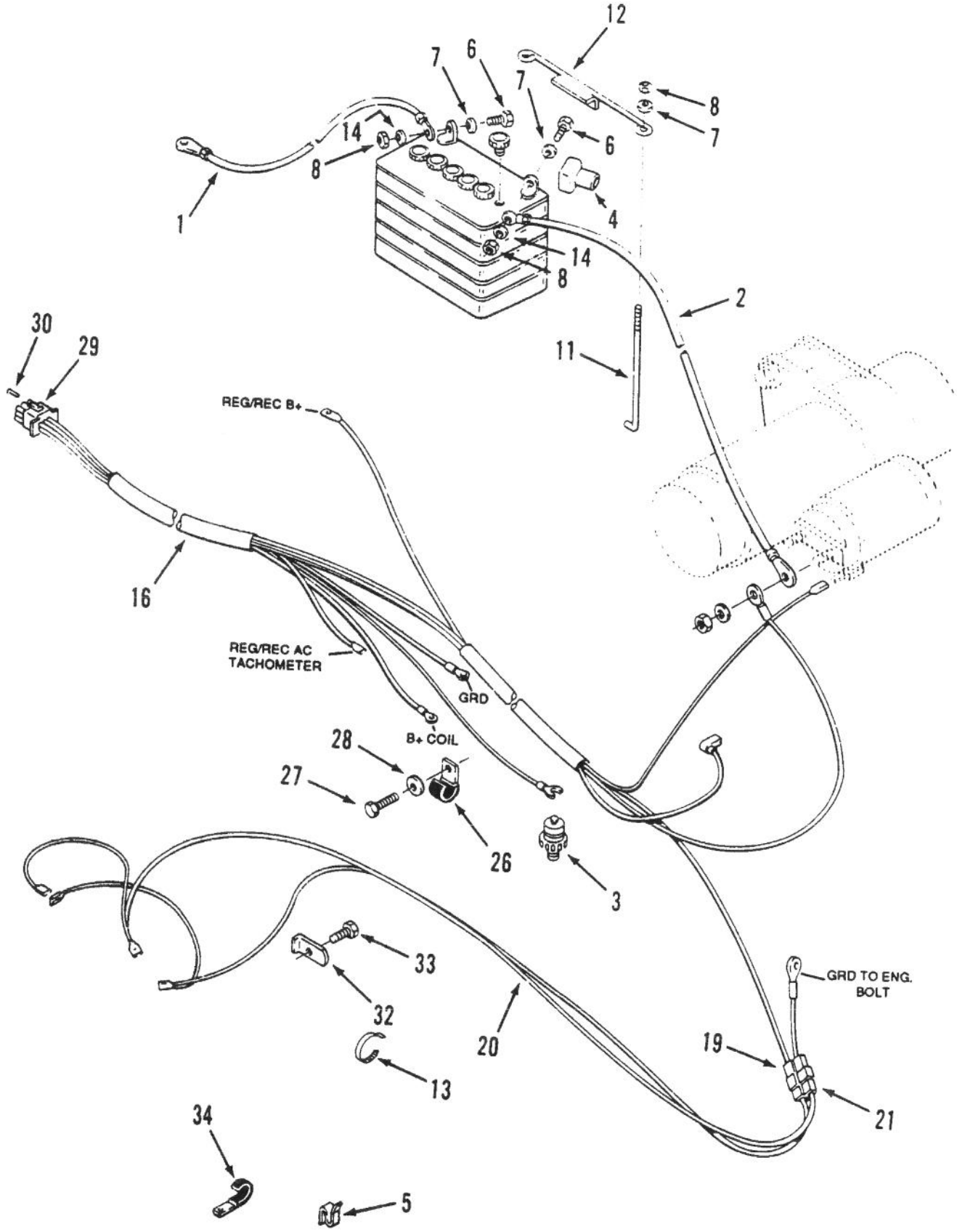

C–1673

ELECTRICAL SYSTEM

Ref. No.	Part No.	Description	No. Used
1	114210	Cable – Battery Ground	1
2	113825	Cable – Battery (+) to Solenoid	1
3	NN10824	Switch – Low Oil Pressure	1
4	109553	Cover – Terminal	2
5	3023	Clip – Small	1
6	321–4	Bolt	2
7	3256–22	Washer	4
8	116497	Nut	6
11	113969	Hook – Battery Hold Down	2
12	113010	Rod – Battery Hold Down	1
13	100571	Tie – Cable	1

Ref. No.	Part No.	Description	No. Used
16	NN10294	Harness – Engine Wiring	1
19	NN10278	Connector	1
20	114052	Harness – Headlight	1
21	109357	Connector	1
26	NN10348	Clip	1
27	NN10399	Screw	1
28	NN10425	Washer – Lock	1
29	NN10281	Connector	1
30	NN10279	Contact – Socket	1
32	109459	Clamp	2
33	926671	Bolt – Hex	2
34	8830	Clip	1

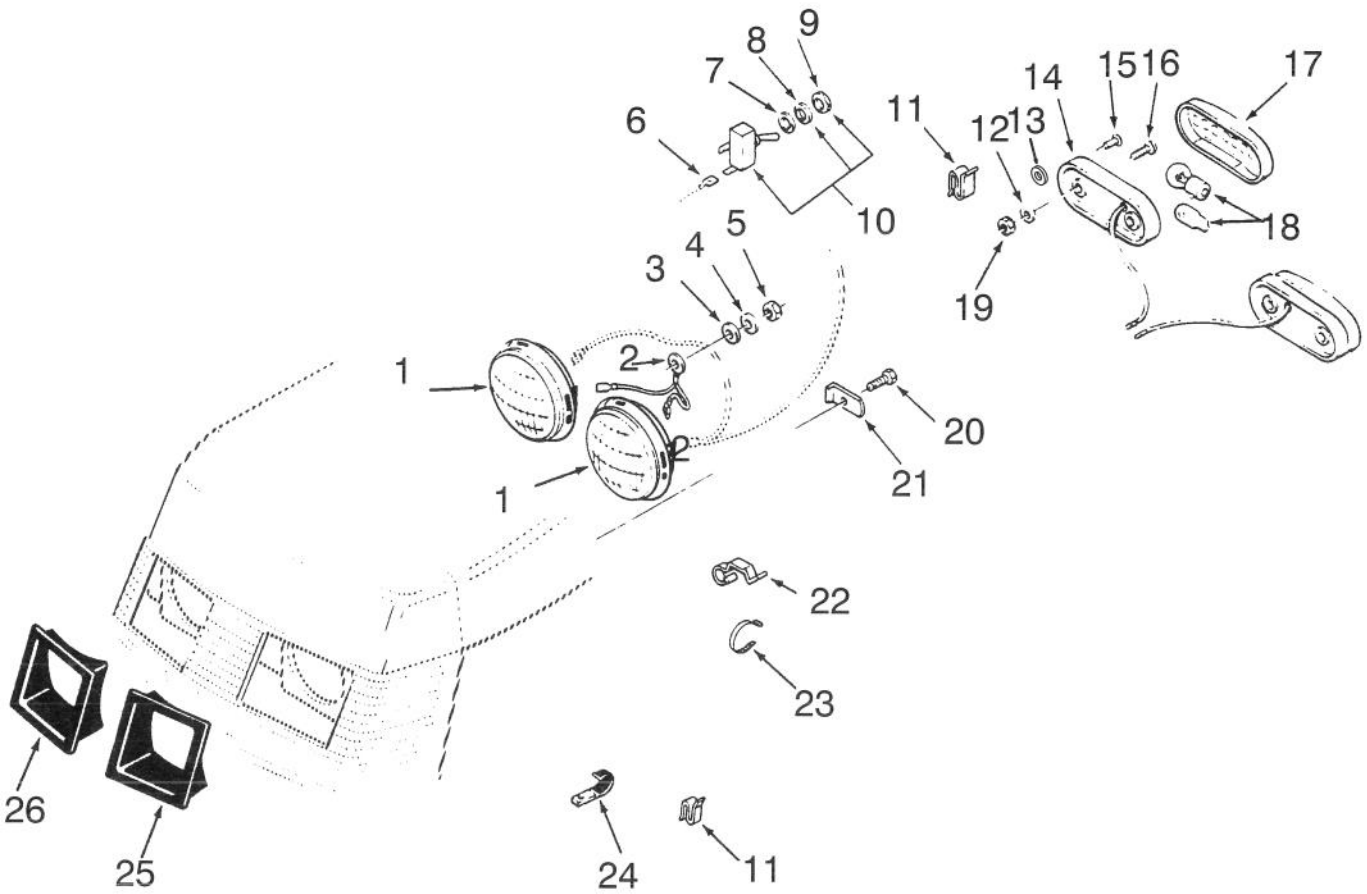

C–1498

ELECTRICAL SYSTEM

Ref. No.	Part No.	Description	No. Used
1	102881	Headlight	2
2	108130	Wire – Headlight Ground	1
3	3256–23	Washer	1
4	3254–2	Washer – Lock	1
5	3296–29	Nut	1
6	518104	Terminal	1
7	920259	Washer – Special	1
8	102950	Ring – Retaining	1
9	113179	Nut	1
10	102138	Switch – Light	1
11	3023	Clip – Small	1
12	3256–21	Washer	4
13	3254–1	Washer – Lock	4
14	105202	Base – Taillight, w/Bulb	2

Ref. No.	Part No.	Description	No. Used
15	3269–3	Rivet – Pop	4
16	910808	Screw	4
17	112564	Lens – Taillight	2
18	8043	Bulb – Light, Metal Base	2
*	109045	Bulb – Light, All Glass	2
19	915551	Nut	4
20	926671	Bolt	2
21	109459	Clamp	2
22	8519	Clip – Large	1
23	100571	Tie – Cable	1
24	8830	Clip	1
25	109495	Retainer – Headlight L.H.	1
26	109494	Retainer – Headlight RH	1

*Not Illustrated

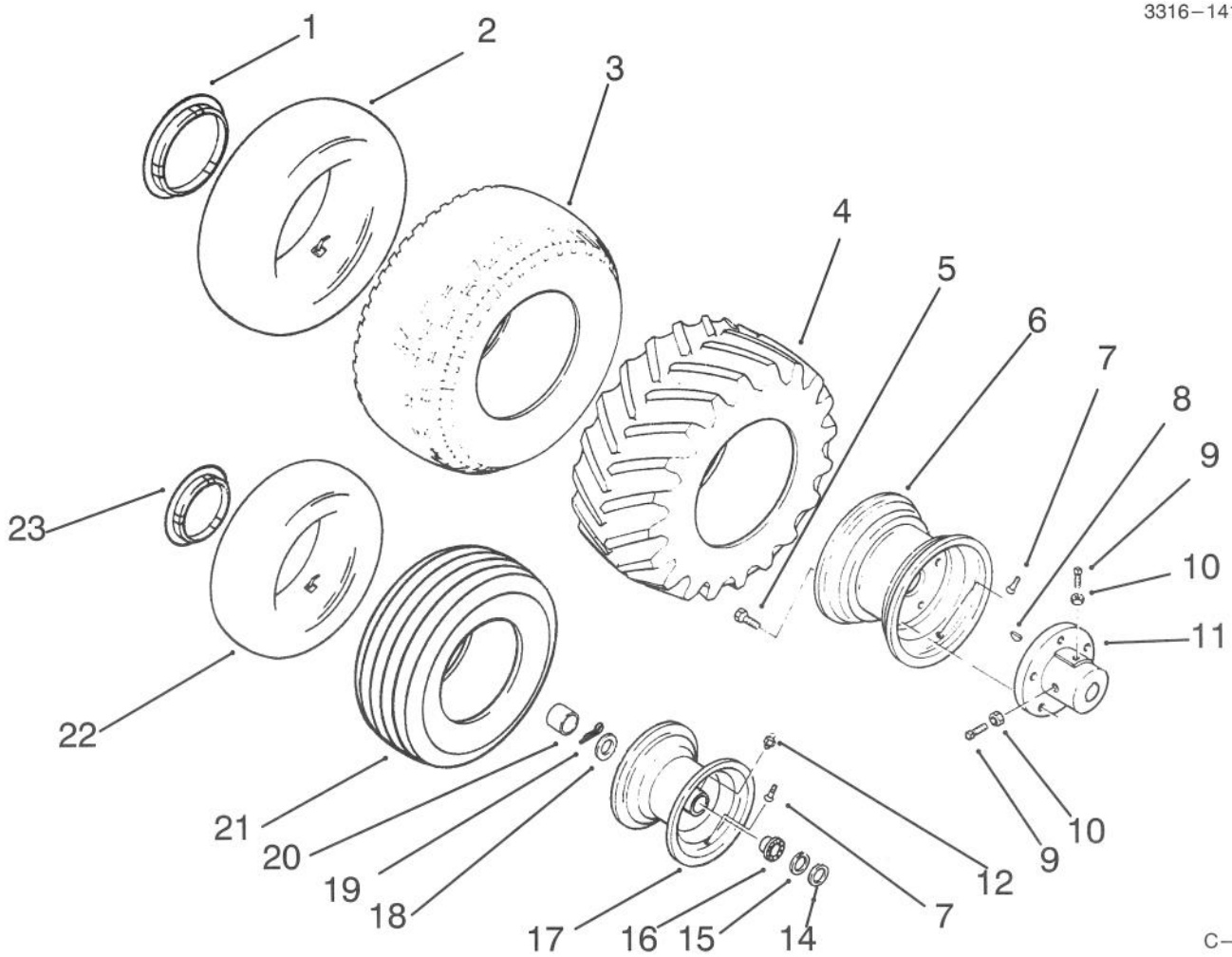

C–1499

WHEELS AND TIRES

Ref. No.	Part No.	Description	No. Used
1	114428	Logo – Hub Cap 12" (Opt.)	2
2	7007	Tube – Rear (Opt.)	2
*	100291	Tube – Cleat Tires" (Opt.)	2
3	116744	Tire – Turf Trac, Rear	2
4	7607	Tire – Cleat, Rear" (Opt.)	2
5	83–2720	Bolt – Lug	10
6	111516	Wheel – Rear	2
7	5108	Stem – Valve	4
8	937108	Key – Woodruff	2
9	3243–5	Screw – Set	4
10	3218–3	Nut	4
11	105763	Hub – Rear	2

Ref. No.	Part No.	Description	No. Used
12	109500	Fitting – Grease	2
14	5210	Washer – Shim .015	2
15	1278	Washer – Shim .050	4
16	110513	Bearing – Ball	4
17	78–1660	Wheel Assembly – Front (Incl. Ref.# 7, 12, & 16)	2
18	111952	Washer – Special Hub Cap	2
19	3272–17	Pin – Cotter	2
20	111951	Hubcap	2
21	117127	Tire – Turf Trac, Front	2
22	100079	Tube – Front (Opt.)	2
23	114427	Logo – Hub Cap 8" (Opt.)	2

*Not Illustrated

3316–141A

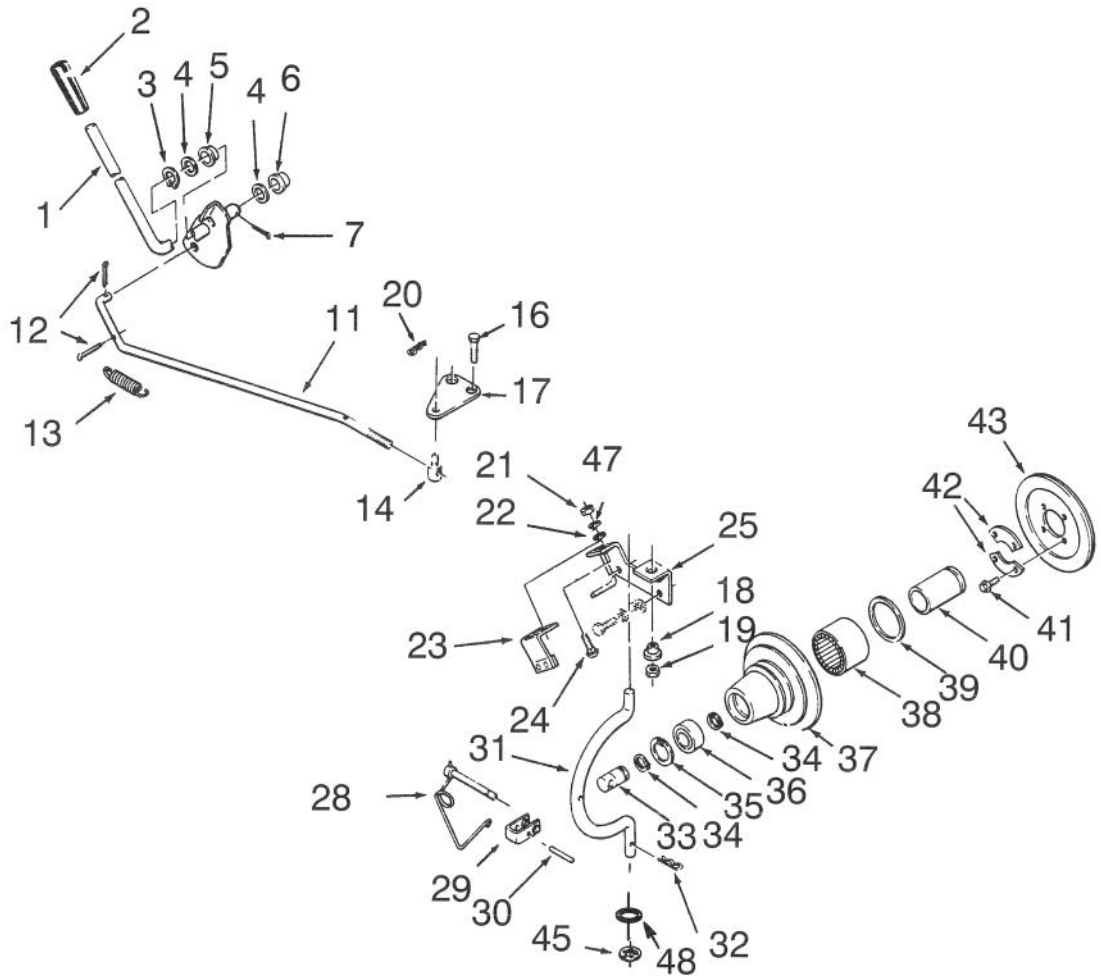

C–1500

PTO CLUTCH AND CONTROL

Ref. No.	Part No.	Description	No. Used
1	111234	Lever – PTO Clutch	1
2	9038	Grip	1
3	106649	Ring – Grip	1
4	3765	Washer – Shim	2
5	5666	Bushing – Nyliner	1
6	5983	Bushing	1
7	3272–10	Pin – Cotter	1
11	111052	Rod – PTO Clutch	1
12	3272–10	Pin – Cotter	2
13	103125	Spring	1
14	110656	Trunnion	1
16	323–7	Bolt	1
17	110669	Plate – PTO	1
18	104859	Spacer	1
19	3296–39	Nut	1
20	933505	Pin – Cotter	1
21	3218–1	Nut	2
22	3256–22	Washer	2
23	110665	Brake Assembly – PTO	1
24	3229–25	Bolt – Carriage	2

Ref. No.	Part No.	Description	No. Used
25	113853	Bracket – Engine	1
28	111314	Pin – Locking	1
29	113107	Clevis	1
30	933274	Pin – Spirol	1
31	113108	Rod – PTO Housing	1
32	933506	Pin – Cotter	1
33	102872	Shaft – Stub	1
34	32120–72	Ring – Snap	2
35	936032	Ring – Snap	1
36	109842	Bearing – Ball	1
37	103478	Housing – Pulley	1
38	6662	Bearing – Needle	1
39	6663	Seal	1
40	6658	Race – Bearing	1
41	321–3	Bolt – Nylok	4
42	6659	Retainer	2
43	114881	Facing – Clutch Plate	1
45	106695	Push–On Ring	1
47	3253–3	Washer – Lock	1
48	3256–27	Washer	1

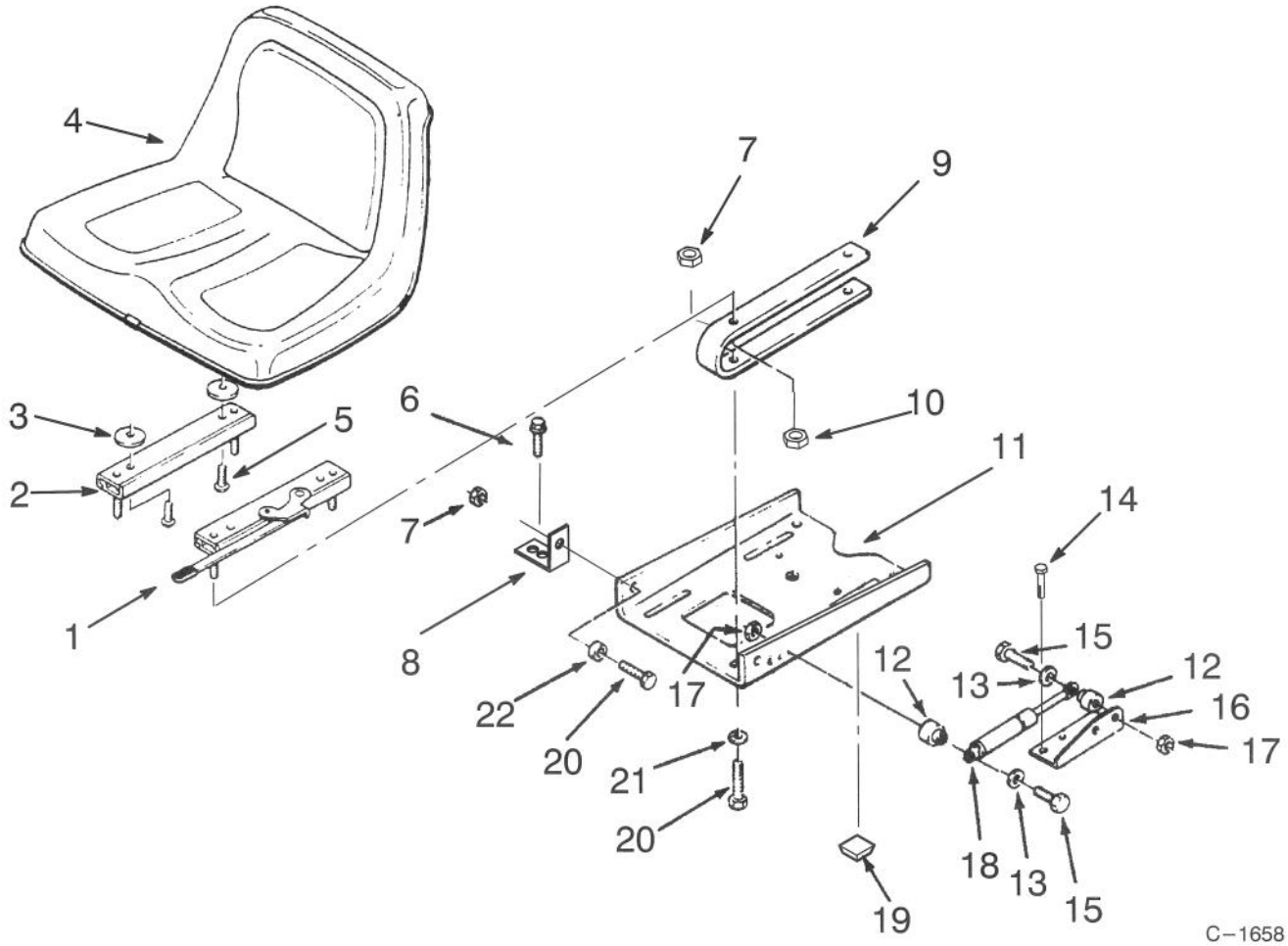

SEAT

Ref. No.	Part No.	Description	No. Used
1	114264	Adjuster – Seat, L.H.	1
2	114265	Slide – Seat, R.H.	1
3	109989	Spacer	4
4	79–3680	Seat	1
5	9108652	Bolt	4
6	913464	Bolt	4
7	3296–29	Nut	6
8	105524	Bracket – Pivot	2
9	114263	Spring – Seat	2
10	9151126	Nut	4
11	78–2990	Plate – Seat Pivot	1

Ref. No.	Part No.	Description	No. Used
12	114344	Spacer	2
13	3256–22	Washer	2
14	9266944	Bolt	2
15	321–8	Bolt	2
16	114345	Bracket	1
17	3296–42	Nut	2
18	114343	Spring – Gas	1
19	111071	Bumper	2
20	322–4	Bolt	6
21	3256–23	Washer	4
22	105503	Bushing	2

*Not Illustrated

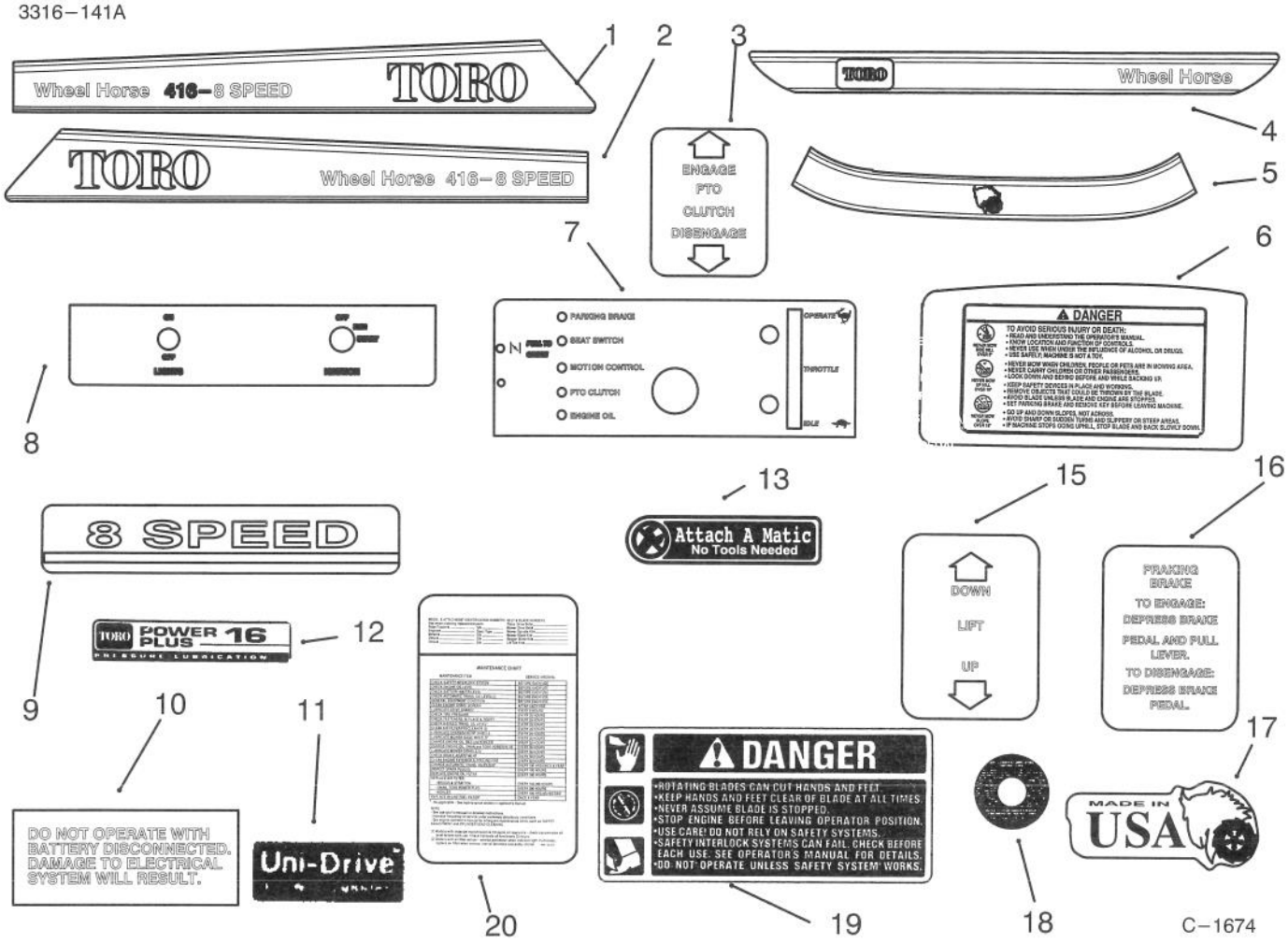

DECALS

Ref. No.	Part No.	Description	No. Used
1	79–4650	Decal – Hood L.H.	1
2	79–4640	Decal – Hood R.H.	1
3	111960	Decal – PTO Clutch	1
4	117760	Decal – Rear Fender	1
5	117509	Decal – Front Hood	1
6	88–0020	Decal – Rear Hood Danger	1
7	119200	Decal – Lower Dash	1
8	79–2470	Decal – Switch Plate	1
9	117513	Decal – 8 Speed	2
10	111926	Decal – Electrical System	1
11	104955	Decal – Unidrive	1

Ref. No.	Part No.	Description	No. Used
12	118540	Decal – Power Plus	1
13	115197	Decal – Attach–A–Matic	1
15	112168	Decal – Lift	1
16	111510	Decal – Parking Brake	1
17	117242	Decal – Made in U.S.A.	1
18	KH10191	Decal – Air Cleaner/Lub	1
19	79–0370	Decal – Danger	1
20	88–3200	Decal – Maintenance	1
*	92–1533	Loose Parts Package	1
*	92–0980	Loose Parts Package (Model 73440 Only)	1

TORO PART NUMBER INDEX

Part No.	Description	Pg. No.	Ref. No.	Qty.
1121	Key	15	18	1
1239	Screw – Set, Special	7	47	1
1243	Cup – Plug	5	28	1
1278	Washer – Shim	11	13	1
1278	Washer – Shim	9	17	3
1278	Washer – Shim .050	45	15	4
1481	Fitting – Grease, 45°	9	3	2
1504	Bushing – Bronze	7	37	2
1516	Bushing – Reverse Idler	7	43	1
1518	Bearing – Needle	5	22	4
1523	Bearing – Needle	5	16	1
1529	Bearing – Needle	5	12	1
1532	Bearing – Needle	5	9	2
1542	Bearing – Needle	5	10	1
1644	Hitch – Drawbar	13	9	1
2844	Washer – Special	11	3	1
3023	Clip	19	26	1
3023	Clip – Small	43	5	1
3023	Clip – Small	44	11	1
3503	Fork – Shift	5	33	2
3517	Ball – Detent	7	55	3
3527	Gear – Reduction	7	38	1
3577	Cover – Dust	7	49	1
3624	Spring	15	4	1
3765	Washer – Shim	46	4	2
3765	Washer – Shim	11	21	1
3909	Pin – Reverse Idler	7	42	1
3912	Gasket – Transmission	7	46	1
3915	Pin – Locating	5	15	2
4204	Gear Assembly, Reverse	7	41	1
4944	Button – Plug	15	8	1
5108	Stem – Valve	45	7	4
5173	Gear – 2nd & 3rd	5	29	1
5174	Gear – 1st & Reverse	5	30	1
5175	Gear Assembly	5	23	1
5210	Washer – Shim	9	16	6
5210	Washer – Shim .015	45	14	2
5224	Cap	22	28	1
5280	Knob – Height Control	15	40	1
5614	Pin – Shift	5	35	1
5615	Rail – Shift, Front	5	31	1
5616	Rail – Shift, Rear	5	32	1
5618	Ring – Retaining	9	8	1
5618	Ring – Retaining	13	12	2
5638	Axle – Front	9	1	1
5666	Bushing – Nyliner	46	5	1
5701	Ring – Retaining	15	29	1
5924	Nut	41	23	2
5979	Bushing – Hood Pivot	17	32	2
5983	Bushing	46	6	1
6216	Pin & Plate	9	4	1
6229	Bearing	15	28	1
6397	Bearing	9	23	1
6472	Bearing – Flanged	9	12	1
6542	Grip – Lift Lever	15	6	1
6658	Race – Bearing	46	40	1
6659	Retainer	46	42	2
6662	Bearing – Needle	46	38	1
6663	Seal	46	39	1
6739	Trunnion	15	20	1
6820	Grip	11	35	1
6921	Terminal	41	65	1
7007	Tube – Rear (Opt.)	45	2	2
7201	Shaft – Input	5	19	1
7204	Gear Assembly	5	21	1
7205	Gear – Sliding	5	24	1
7206	Gear – Reduction	5	25	1
7207	Bearing – Needle	5	26	2
7208	Shaft – Reduction Gear	5	27	1
7213	Bolt – Detent	7	57	1
7214	Lever – Shift Hi–Low Range	7	58	1
7269	Gear Assembly	7	36	1
7418	Washer – Thrust	5	20	1
7451	Pulley – Idler	11	42	1
7456	Clamp	21	11	4
7466	Pulley – Engine Drive	3	10	1
7607	Tire – Cleat, Rear (Opt.)	45	4	2
7879	Bushing	11	24	2
7896	Washer – Bowed	11	12	1
7896	Washer – Bowed	9	29	1
8043	Bulb – Light, Metal Base	44	18	2
8130	Retainer – Spring	15	3	1
8519	Clip – Large	44	22	1
8616	Spring	13	7	2
8830	Clamp	15	52	1
8830	Clip	44	24	1
8830	Clip	43	34	1
8830	Clip	41	55	1
9038	Grip	46	2	1
9038	Grip	13	22	1
9416	Bearing – Needle	5	11	2
9547	Washer – Thrust	7	50	1
9593	Band – Brake	11	4	1
9598	Plate – Back–Up	11	7	1
100079	Tube – Front (Opt.)	45	22	2
100291	Tube – Cleat Tires (Opt.)	45	*	2
100441	Seal – Brake Shaft	5	18	1
100442	Seal – Input Shaft	5	13	1
100443	Seal – Axle	5	14	2
100571	Tie – Cable	43	13	1
100571	Tie – Cable	44	23	1
100571	Tie – Cable	41	41	1
101161	Trunnion – Clutch Rod	11	22	1
101623	Gear – Differential Pinion	7	70	8
101625	Shaft – Pinion	7	52	1
101626	Gear 44 Tooth	7	53	1
101707	Lock	13	6	1
101711	Housing – Front Hitch	13	1	1
101750	Rod	13	3	1
101751	Rod – Front Hitch Lock	13	4	1
101847	Dipstick	7	44	1
101850	Rod – Hood Stop	17	29	1
101884	Nut – Special	41	3	1
101889	Gear – Differential Axle	7	71	2
102025	Spacer	11	36	1
102138	Switch – Light	44	10	1
102644	Plate – Mid Hitch	13	15	2
102651	Terminal	41	44	8
102703	Nipple – Transmission Fill	7	45	1
102809	Nut – Special	11	39	1
102872	Shaft – Stub	46	33	1
102881	Headlight	44	1	2
102950	Ring – Retaining	44	8	1
102974	Gear Assembly	7	51	1
103125	Spring	46	13	1
103347	Rod – Clutch	11	14	1
103478	Housing – Pulley	46	37	1
103480	Switch – Clutch Interlock,	41	8	1
103543	Bell Crank – Brake Linkage	11	23	1
103628	Spring – Return	11	41	1

*Not Illustrated

TORO PART NUMBER INDEX (Cont.)

Part No.	Description	Pg. No.	Ref. No.	Qty.
103787	Line – Fuel 50	35	10	1
104047	Bushing	35	7	1
104048	Valve – Fuel Shut–Off	35	8	1
104248	Grommet	19	18	1
104859	Spacer	46	18	1
104926	Switch – Connector Body	41	6	1
104955	Decal – Unidrive	48	13	1
104955	Decal – Unidrive	7	76	1
105061	Gear – Differential Ring	7	68	1
105202	Base – Taillight, w/Bulb	44	14	2
105269	Shaft–Drawbar Hitch	13	10	1
105316	Cap – Lock Rod	13	8	2
105316	Cap – Rod	15	7	2
105453	Key	3	15	1
105503	Bushing	47	22	2
105524	Bracket – Pivot	47	8	2
105763	Hub – Rear	45	11	2
105797	Ring – Retaining	13	5	8
105797	Ring – Retaining	17	31	2
105842	Battery	41	33	1
105845	Tube – Rear Lift Cable	15	30	1
105859	Latch – Front Hitch	13	2	1
105875	Axle – Rear	7	72	2
105876	Ring – Special, Snap	7	73	2
105886	Rod – Brake, Front	11	29	1
105896	Arm – Clutch Rod	11	18	1
105900	Rod – Brake, Rear	11	28	1
106030	Spring – Detent	7	56	2
106165	Pulley – Transmission Drive	3	12	1
106193	Bolt – Special	11	43	1
106222	Footrest – RH	21	6	1
106223	Footrest – LH	21	7	1
106234	Tank – Fuel	35	3	1
106236	Support – Fuel Tank, RH	21	20	1
106250	Cover – Dust	19	16	1
106257	Rod – Latch	15	2	1
106258	Sleeve	15	39	1
106269	Bushing	15	16	2
106345	Casting – Height Control	15	37	1
106352	Guard – Lower Belt	21	5	1
106411	Latch Bracket	15	41	1
106414	Retainer	15	17	1
106417	Rod – Bell Crank Pivot	11	26	1
106451	Lever – Parking Brake	11	34	1
106454	Trim – Edge	19	25	1
106522	Chain – Lift	15	22	1
106634	Pin – Hitch	13	13	1
106649	Ring – Grip	46	3	1
106695	Push–On Ring	46	45	1
106719	Drum – Brake	11	1	1
106772	Trim – Edge 4"	19	11	1
106948	Tray – Battery	41	34	1
107069	Clip	21	8	3
107069	Nut – Speed	19	15	6
107374	Washer – Special	7	66	4
107677	Spring – Brake Return	11	40	1
107939	Belt – Drive	3	14	1
107951	Bracket – Fender Front	21	14	1
108130	Wire – Headlight Ground	44	2	1
108457	Nut – Push	21	32	1
108464	Support – Fuel Tank, LH	21	19	1
108563	Lever – Lift	15	1	1
108565	Shaft	15	46	1
108758	Knob – Gear Shift	7	54	1
108881	Nut	7	67	4
108898	Clamp	35	9	2
108903	Clamp – Tube	15	31	1
109045	Bulb – Light, All Glass	44	*	2
109102	Fuse 25 Amp ATO or ATC	41	*	1
109189	Bearing	9	24	1
109262	Washer – Special	9	32	2
109355	Fuse 15 Amp ATO or ATC	41	12	1
109357	Connector	43	21	1
109459	Clamp	44	21	2
109459	Clamp	43	32	2
109494	Retainer – Headlight RH	44	26	1
109495	Retainer – Headlight LH	44	25	1
109500	Fitting – Grease	45	12	2
109530	Nut	17	13	1
109553	Cover – Terminal	43	4	2
109553	Cover – Terminal	41	28	1
109554	Bracket – Belt Guard	21	17	1
109842	Bearing – Ball	46	36	1
109989	Spacer	47	3	4
110142	Trim – Edge	19	23	1
110234	Bolt	11	2	1
110502	Shield – Dirt	41	16	1
110513	Bearing – Ball	45	16	4
110636	Pad – Footrest	21	13	2
110653	Rod – Height Control	15	34	1
110656	Trunnion	46	14	1
110665	Brake Assembly – PTO	46	23	1
110669	Plate – PTO	46	17	1
110725	Stick Shift Assembly	7	74	1
110727	Rod – Shift Hi–Low Range	7	62	1
110960	Fender	21	22	1
110995	Transmission Assembly	5	*	1
111034	Plate – Hood Stand	19	20	1
111052	Rod – PTO Clutch	46	11	1
111071	Bumper	47	19	2
111071	Bumper	21	31	2
111154	Wire – Lock	15	53	1
111196	Cap – Diff End	7	64	2
111198	Case–Transmission, LH	5	2	1
111199	Bearing – Ball	5	8	2
111200	Case–Transmission, RH	5	1	1
111216	Switch – Ignition	41	1	1
111234	Lever – PTO Clutch	46	1	1
111271	Console	17	16	1
111314	Pin – Locking	46	28	1
111332	Switch – PTO Interlock	41	20	2
111332	Switch – Parking Brake	41	69	1
111343	Bushing Assembly	39	9	5
111357	Clip	22	31	1
111359	Nut – Hex	39	4	1
111383	Collar	11	10	2
111392	"J"Clip	17	21	1
111510	Decal – Parking Brake	48	2	1
111516	Wheel – Rear	45	6	2
111534	Decal – Hi–Low Shift	48	16	1
111642	Barrier – Switch Insulator	41	13	2
111757	Edging – Console	17	9	1
111767	Washer	39	3	1
111926	Decal – Electrical System	48	12	1
111951	Hubcap	45	20	2
111952	Washer – Special Hub Cap	45	18	2
111960	Decal – PTO Clutch	48	3	1
112168	Decal – Lift	48	15	1
112185	Body – Connector	41	17	1
112415	Stop – PTO	17	24	1

*Not Illustrated

TORO PART NUMBER INDEX (Cont.)

Part No.	Description	Pg. No.	Ref. No.	Qty.
112506	Bracket	39	6	1
112506	Bracket	17	17	1
112564	Lens – Taillight	44	17	2
113010	Hold Down – Battery	41	38	1
113010	Rod – Battery Hold Down	43	12	1
113107	Clevis	46	29	1
113108	Rod – PTO Housing	46	31	1
113179	Nut	44	9	1
113381	Spindle – Front, LH	9	7	1
113382	Spindle – Front, RH	9	*	1
113443	Tube – Steering	9	28	1
113445	Bar – Lift	15	27	1
113825	Cable – Battery (+) to	43	2	1
113853	Bracket – Engine	46	25	1
113935	Cover – Side, LH	19	13	1
113969	Hook – Battery Hold Down	43	11	2
113969	Hook – Battery Hold Down	41	37	2
114017	Clamp – Steel	41	52	1
114052	Harness – Headlight	43	20	1
114210	Cable – Battery Ground	43	1	1
114214	Gasket – Exhaust	22	30	2
114215	Cover – Exhaust, LH	22	22	1
114216	Cover – Exhaust, RH	22	23	1
114217	Deflector – Air	22	21	1
114263	Spring – Seat	47	9	2
114264	Adjuster – Seat, R.H.	47	1	1
114265	Slide – Seat, L.H.	47	2	1
114343	Spring – Gas	47	18	1
114344	Spacer	47	12	2
114345	Bracket	47	16	1
114427	Logo – Hub Cap 8" (Opt.)	45	23	2
114428	Logo – Hub Cap 12"	45	1	2
114636	Pipe	22	25	1
114720	Tube – Drain	41	39	1
114763	Pipe	22	27	1
114764	Elbow – 90°	22	26	1
114813	Pedal – Brake	11	9	1
114814	Pedal – Clutch	11	8	1
114825	PC Board w/Lights	39	10	1
114877	Guard – Belt	21	1	1
114881	Facing – Clutch Plate	46	43	1
114951	Control – Choke	17	12	1
115197	Decal – Attach–A–Matic	48	14	1
115392	Control – Throttle	17	7	1
115411	Support – Switch	41	18	1
116000	Bolt – Carriage	21	3	1
116000	Bolt – Carriage	21	9	6
116744	Tire – Turf Trac, Rear	45	3	2
117377	Harness – Wiring	39	7	1
116397	Relay	41	62	1
116445	Decal – Parking Brake	48	7	1
116454	Knob – Control	17	8	1
116470	Muffler	22	24	1
116497	Nut	43	8	6
116497	Nut	41	32	4
116609	Plate – Engine	22	2	1
116636	Fork – Shift Hi–Low Range	7	59	1
116745	Rod – Pivot	17	28	1
116746	Bracket – RH	17	33	1
116747	Bracket – LH	17	25	1
116796	Test Switch	39	1	1
117127	Tire – Turf Trac, Front	45	21	2
117217	Button – Switch	39	2	1
117242	Decal – Made in U.S.A.	48	18	1
117343	Latch – Hood	17	15	2
117344	Handle Assembly	17	5	2
117371	Bolt – Carriage	19	6	4
117431	Rivet – Pop	17	14	4
117432	Rivet – Pop	17	4	4
117509	Decal – Front Hood	48	5	1
117513	Decal – 8 Speed	48	11	2
117760	Decal – Rear Fender	48	4	1
117930	Latch – Mid Hitch	13	17	1
117940	Rod – Mid Hitch Lock	13	16	1
118280	Holder – Fuse	21	36	1
118530	Name Plate–TORO	23	16	1
118540	Decal – Power Plus	48	6	1
118620	Bolt – Carriage	21	33	2
119220	Decal – Switch Plate	48	10	1
120320	Guide – Belt	3	4	1
120590	Stop – Throttle	17	20	1
201327	Screw	34	28	3
518077	Terminal	41	68	2
518104	Terminal	44	6	1
518105	Terminal	41	7	1
518105	Terminal	41	64	1
519337	Clip – Cable	41	63	1
908035	Bolt	22	5	4
908035	Bolt	22	3	4
910331	Screw	22	20	4
910478	Screw	41	59	2
910794	Screw	41	35	1
910808	Screw	44	16	4
910948	Screw	41	71	2
911423	Bolt	7	65	4
913464	Bolt	47	6	4
915002	Nut	9	39	1
915551	Nut	44	19	4
915553	Nut	22	4	4
915732	Nut	41	60	2
915732	Nut – Hex	41	70	2
915962	Nut – Hex	41	54	1
920120	Washer – Lock	41	53	1
920160	Washer – Lock	41	2	1
920248	Washer – Nylon	11	19	3
920248	Washer – Nylon	11	30	2
920259	Washer – Special	44	7	1
920262	Washer – Special	41	48	1
926671	Bolt	41	19	1
926671	Bolt	44	20	2
926671	Bolt – Hex	43	33	2
926696	Bolt	19	*	2
926696	Bolt	15	45	2
926697	Bolt	35	2	2
933148	Pin – Spirol	15	5	1
933156	Pin – Spirol	5	34	2
933184	Pin – Spirol	7	63	1
933190	Pin – Spirol	11	17	1
933267	Pin – Spirol	11	50	1
933274	Pin – Spirol	46	30	1
933505	Pin – Cotter	13	14	1
933505	Pin – Cotter	46	20	1
933505	Pin – Cotter	15	54	1
933506	Pin – Cotter	46	32	1
933507	Pin – Cotter	15	14	2
936032	Ring – Snap	46	35	1
937089	Key – Woodruff	7	40	1
937108	Key – Woodruff	45	8	2
937221	Key – Hi–Pro	3	13	1
950154	Clamp	35	11	2

*Not Illustrated

TORO PART NUMBER INDEX (Cont.)

Part No.	Description	Pg. No.	Ref. No.	Qty.
9107562	Screw	39	8	2
9107622	Screw	17	10	6
9107922	Screw	17	6	6
9108652	Bolt	47	5	4
9107944	Screw – Machine	21	34	2
9108372	Screw	21	2	2
9108372	Screw	19	14	6
9108372	Screw	19	24	1
9151125	Nut	47	10	4
9151126	Nut	19	7	4
9156934	Nut	9	11	4
9157324	Nut – Lock	39	5	2
9157404	Nut	21	35	4
9157404	Nut – Lock	17	19	2
9159604	Nut	17	18	2
9201504	Washer – Lock	17	11	2
9202254	Washer – Special	11	49	1
9266944	Bolt	19	4	1
9266944	Bolt	19	12	4
9266944	Bolt	19	17	4
9266944	Bolt	21	23	4
9266944	Bolt	11	27	1
9266944	Bolt	15	42	1
9266944	Bolt	21	4	1
9266944	Bolt	19	10	1
9266944	Bolt	17	22	3
9266944	Bolt	47	14	2
9320004	Pin – Cotter	17	30	2
9335044	Pin – Cotter	15	21	1
9791204	Spacer	13	11	2
NN10825	Kit – Gearcase	37	1	1
NN10853	Crankshaft	27		1
NN0980	Capacitor (300 VD)	30	20	1
NN10003	Bearing – Crankshaft, Front	25	15	1
NN10004	Bearing – Crankshaft, Front	25		1
NN10005	Bearing – Crankshaft, Front	25		1
NN10006	Bearing – Crankshaft, Front	25		1
NN10007	Bearing – Crankshaft, Front	25		1
NN10010	Bearing – Crankshaft, Rear	25		1
NN10012	Bearing – Crankshaft, Rear	25		1
NN10013	Bearing – Crankshaft, Rear	25		1
NN10018	Base – Oil	28	1	1
NN10021	Screw	27	16	1
NN10030	Washer	27	13	1
NN10032	Camshaft	27	11	1
NN10035	Insert – Intake Seat, Std.	25	14	2
NN10036	Insert – Intake Seat .002	25		2
NN10037	Insert – Intake Seat .005	25		2
NN10038	Insert – Intake Seat .010	25		2
NN10039	Insert – Intake Seat .025	25		2
NN10054	Insert – Exhaust Seat, Std.	25	13	2
NN10055	Insert – Exhaust Seat .002	25		2
NN10056	Insert – Exhaust Seat .005	25		2
NN10057	Insert – Exhaust Seat .010	25		2
NN10058	Insert – Exhaust Seat .025	25		2
NN10070	Gasket	25	36	2
NN10075	Valve – Exhaust	25	29	2
NN10075	Valve – Intake	25	28	2
NN10077	Spring	25	31	4
NN10078	Washer	25	38	4
NN10079	Head – Left Cylinder	25		1
NN10080	Head – Right Cylinder	25	37	1
NN10082	Lock – Spring	25	32	8
NN10100	Piston Pin	25	55	2
NN10120	Bolt – Special Rod	25	59	4
NN10125	Rod w/Bolts & Nuts – STD	25	58	2
NN10126	Rod w/Bolts & Nuts – .010	25		2
NN10127	Rod w/Bolts & Nuts – .020	25		2
NN10128	Rod w/Bolts & Nuts – .030	25		2
NN10129	Tappet – Std.	25	27	4
NN10130	Tappet .002 O.S	25		4
NN10131	Tappet .004 O.S	25		4
NN10133	Spring	25	52	1
NN10134	Pump – Oil, Gasket Kit	25	47	1
NN10135	Plunger	25	53	1
NN10136	Pump – Oil, Complete	25	46	1
NN10138	Cup – Oil Pump Intake	28	8	1
NN10143	Filter – Oil	29	7	1
NN10159	Cap – Oil Fill & Indicator	28	9	1
NN10171	Flywheel	27	15	1
NN10174	Element – Air Cleaner	30	4	1
NN10176	Element – Foam	30	3	1
NN10187	Tube – Air Intake	30	11	1
NN10199	Jet – Power	32	6	1
NN10201	Jet – Idle	32	5	1
NN10207	Kit – Choke Shaft	32	7	1
NN10209	Kit – Float	32	1	1
NN10214	Pin	27	14	1
NN10215	Ring – Retaining	27	6	1
NN10217	Spring – Governor, 5 Ball	23	11	1
NN10217	Spring – Governor, 5 Ball	34	11	1
NN10218	Bushing	34	20	1
NN10219	Spring	34	16	1
NN10221	Hub – Governor Cup	27	7	1
NN10222	Cup – Governor	27	8	1
NN10245	Battery Ignition Coil	37	31	1
NN10247	Rotor – Ignition	37	32	1
NN10248	Nut	37	36	1
NN10249	Nut	37	39	1
NN10261	Regulator – Voltage	37	28	1
NN10266	Kit – Starter Shift Lever	38	7	1
NN10277	Fuse 30 Amp ATO or ATC	41	*	1
NN10278	Connector	43	19	1
NN10279	Contact – Socket	43	30	1
NN10281	Connector	43	29	1
NN10289	Clamp	23	7	1
NN10290	Terminal – Stator Leads	37	18	3
NN10294	Harness – Engine Wiring	43	16	1
NN10296	Bracket – Lifting	23	9	2
NN10302	Line – Fuel	35	14	1
NN10309	Grommet	30	16	1
NN10320	Swivel – Throttle Control	34	30	1
NN10323	Ring – Oil	28	10	1
NN10326	Seal	25	33	2
NN10327	Bearing	37	8	1
NN10330	Key	27	5	1
NN10334	Pin – Stop	25	11	4
NN10335	Pin – Dowel	37	6	1
NN10336	Pin	25	20	2
NN10345	Retaining Ring	25	56	4
NN10348	Clip	35	15	1
NN10348	Clip	43	26	1
NN10348	Clip – Fuel Line	31	9	1
NN10348	Clip – Wire	37	37	1
NN10348	Clip – Wire	235181		
NN10352	Stud – Gear Cover	37	14	1
NN10355	Washer	27	18	1
NN10356	Washer – Flat	23	12	1
NN10357	Washer – Flat	34	19	1
NN10359	Washer	25	42	2

*Not Illustrated

TORO PART NUMBER INDEX (Cont.)

Part No.	Description	Pg. No.	Ref. No.	Qty.
NN10361	Washer	25	51	1
NN10362	Washer – Flat	31	15	1
NN10370	Bolt	25	30	2
NN10373	Screw	29	3	2
NN10375	Screw – Hex. Hd.	31	8	4
NN10379	Screw	28	4	4
NN10381	Bolt – Special	25	41	10
NN10385	Screw	25	34	2
NN10390	Screw – Hex. Hd.	30	22	1
NN10393	Washer	23	3	1
NN10393	Washer	23	11	1
NN10393	Screw	34	8	4
NN10394	Screw – Hex. Hd.	37	24	2
NN10395	Screw	34	14	1
NN10399	Screw	43	27	1
NN10408	Screw – Hex. Hd.	37	41	2
NN10409	Screw	27	19	6
NN10410	Screw	33	9	1
NN10410	Screw – Machine	34	32	1
NN10412	Screw	33	5	1
NN10414	Screw	23	8	4
NN10414	Screw – Hex. Hd	37	27	1
NN10425	Washer – Lock	43	28	1
NN10426	Nut	37	16	1
NN10428	Nut	25	60	4
NN10438	Gear	27	4	1
NN10439	Washer	27	3	1
NN10444	Control – Ignition	37	22	1
NN10465	Wrench	29	8	1
NN10478	Guide – Intake Valve	25		2
NN10479	Guide – Exhaust Valve	25	16	2
NN10504	Carburetor	31	1	1
NN10506	Filter – Fuel	35	17	1
NN10515	Cover – Ignition Plunger	37	30	1
NN10516	Indicator – Ignition Module	37	42	1
NN10518	Stator w/Terminals	37	17	1
NN10554	Gasket	25	7	1
NN10690	Seal	28	13	1
NN10768	Nut	38	10	1
NN10784	Screw	33	11	1
NN10809	Kit – Choke Lever	32	8	1
NN10810	Kit – Fixed Jet	32	4	1
NN10811	Kit – Throttle Shaft	32	9	1
NN10821	Cover – Valve	25	25	2
NN10824	Switch – Low Oil Pressure	43	3	1
NN10824	Switch – Oil Pressure	29	10	1
NN10826	Governor Shaft &	37	3	1
NN10830	Plug	33	7	1
NN10832	Bracket	23	15	1
NN10854	Tube – Oil Fill, Chrome	28	12	1
NN10858	Hose – Fuel	31	16	1
NN10862	Housing – Blower	23	5	1
NN10877	Spring – Governor Rod	31	20	1
NN10883	Kit – Starter Brush	38	11	1
NN10884	Clutch – Starter	38	6	1
NN10885	Starter Hdwr Kit	38	1	1
NN10886	Seal – Dust	38	5	1
NN10887	Kit – Starter Solenoid	38	8	1
NN10894	Drain – Oil Filter	29	4	1
NN10895	Gasket	37	10	1
NN10929	Holder – Starter Brush	38	13	1
NN10930	Cap – Starter Solenoid	38	9	1
38–1420	Switch – Seat	41	14	1
55–3570	Cap – Fuel	35	4	1
57–8000	Seal – Oil	25	10	1
57–8050	Bearing – Crankshaft, Rear,	25	5	1
57–8060	Bearing – Crankshaft, Rear	25		1
57–8090	Gasket	28	2	1
57–8160	Bearing – Camshaft	25	9	2
57–8160	Washer – Thrust	25	6	2
57–8170	Shim 0.005	25	4	A/R
57–8180	Gear – Ring	27	22	1
57–8210	Camshaft Gear	27	12	1
57–8280	Gasket	25	26	2
57–8580	Breather – Baffle	25	22	1
57–9080	Pump – Fuel	35	12	1
57–9170	Swivel – Choke Lever	33	8	1
57–9180	Link – Choke	33	3	1
57–9190	Clamp – Cable	34	12	1
57–9190	Clamp – Throttle Cable	34	23	1
57–9190	Clip	33	12	1
57–9340	Plug – Spark	37	33	2
57–9550	Clamp	37	19	1
57–9570	Seal – Oil	37	7	1
57–9580	Seal – Oil	37	9	1
57–9620	"O"Ring	31	14	1
57–9640	Ball	27	9	1
57–9650	Bearing	37	2	1
57–9660	Key	27	10	1
57–9690	Plug	25	2	1
57–9700	Clip – Retaining, Rod to	31	12	1
57–9710	Ring – Retaining	27	2	1
57–9730	Clip – Retaining	37	26	1
57–9750	Washer	29	2	2
57–9750	Washer	37	12	5
57–9770	Washer – Flat	38	3	2
57–9770	Washer – Flat	25	40	18
59–0290	Tube – Oil	25	12	1
59–0360	Tube – Vacuum Port	37	13	1
59–0370	Cap	35	18	1
59–0370	Cap	37	20	1
59–0420	Yoke	37	4	1
59–0460	Lever – Choke	33	2	1
59–0470	Bracket	33	4	1
59–0720	Pin – Cotter	33	10	1
59–0720	Pin – Cotter	34	31	1
59–0830	Washer – Flat	34	25	1
59–0850	Washer	33	1	2
59–0880	Bolt	25	3	5
59–0910	Bolt	25	50	1
59–0950	Screw	37	5	1
59–0970	Screw	23	6	1
59–0980	Screw	23	4	1
59–1000	Screw	34	22	1
59–1030	Screw	34	15	1
59–1050	Screw	34	35	2
59–1050	Screw	35	13	1
59–1100	Screw	34	18	2
62–2730	Kit – Bushing	38	12	1
62–7770	Key – Ignition, Padded	41	4	1
71–5830	Cap – Valve	25	44	4
71–5980	Gasket	31	10	2
71–6040	Starter, Complete – See	38	2	1
71–6290	Kit – Engine Gasket Valve	25	45	1
72–0850	Gasket	31	2	1
76–1420	Steering Wheel	9	30	1
78–0020	Meter – Hour,	41	51	1
78–0080	Clamp – Voltmeter	41	22	1
78–0370	Insert	9	40	1
78–1550	Lever – Lift	15	19	1

*Not Illustrated

TORO PART NUMBER INDEX (Cont.)

Part No.	Description	Pg. No.	Ref. No.	Qty.
78–1660	Wheel Assembly – Front	45	17	2
78–2680	Frame	2	1	1
78–2880	Shaft	9	15	1
78–2900	Tie Rod Assembly	9	10	2
78–2920	Joint – Ball	9	38	1
78–2970	Arm – Clutch Idler	11	16	1
78–2990	Plate – Seat Pivot	47	11	1
78–3010	Bracket – Battery Support	19	5	1
78–3020	Plate – Front	19	9	1
78–3240	Spring – Gas	11	53	1
78–3250	Spacer	11	60	1
78–3260	Spacer	11	55	1
79–0060	Voltmeter	41	21	1
79–0370	Decal – Danger	48	20	1
79–0370	Decal – Danger	19	27	1
79–2470	Decal – Lower Dash	48	9	1
79–3600	Harness Assy – Wiring	41	5	1
79–3680	Seat	47	5	1
79–4640	Decal – 416–8 Speed R.H.	17	1	1
79–4640	Decal – Hood RH	48	2	1
79–4650	Decal – 416–8 Speed L.H.	17	*	1
79–4650	Decal – Hood LH	48	1	1
79–4900	Hoodstand	19	1	1
79–4990	Bracket – Fender Support	21	18	1
79–5210	Engine – 16HP TORO Power	22	1	1
79–6320	Cover – Air Cleaner	30	2	1
79–6330	Housing – Air Cleaner	30	6	1
79–6340	Support – Air Cleaner	30	14	1
79–6350	Knob – Tool less	30	29	1
79–6360	Bracket	34	13	1
79–6390	Bracket – Governor Control	34	24	1
79–6400	Bushing – Governor Control	34	29	1
79–6410	Link – Governor Control	34	33	1
79–6420	Adapter – Governor Arm	34	34	1
79–6440	Screen	27	21	1
79–6460	Bracket	28	11	1
79–6470	Gasket	29	6	1
79–6490	Gasket – Plate	37	29	1
79–6520	Spacer	30	23	1
79–6580	Screw – Cap	38	4	2
82–0020	Plate – Bearing	25	8	1
82–0500	Adapter – Oil Filter	291		1
82–0530	Clamp	25	21	1
82–0540	Tube – Baffle Breather	25	65	1
82–0550	Breather Cap & Valve	25	64	1
82–0560	Screen	25	66	2
82–0570	Seal	25	23	1
82–0620	Guard – Stationary	23	13	1
82–0680	Gasket	29	9	1
82–0780	Kit – Repair	32	2	1
82–0850	Gasket – Carburetor Mtg.	32	3	1
82–0930	Screw	23	14	2
82–1000	Kit – Terminal	37	21	1
82–1080	Clamp – Fuel	35	16	6
82–1090	Clamp – Hose	31	19	1
82–1120	Hose – Breather	31	17	1
82–1130	Plug – Sq Hd	28	5	2
82–1150	Key	27	23	1
82–1310	Washer – Lock	28	3	4
82–1320	Washer	27	17	1
82–1340	Cable – Spark Plug	37	34	1
82–1340	Washer – Flat	37	35	2
82–1340	Washer – Flat	25	48	2
82–1350	Washer – Flat	31	4	4
82–1360	Screw – Hex. Hd	37	38	1
82–1370	Screw	34	27	1
82–1400	Screw	27	20	4
82–1410	Screw	37	11	4
82–1410	Screw – Hex. Hd.	31	7	2
82–1410	Screw – Hex. Hd.	37	40	1
82–1410	Washer – Flat	31	6	2
82–1450	Screw	31	11	2
82–1480	Screw	25	39	1
82–1500	Screw – Hex. Hd.	37	23	3
82–1510	Screw	29	5	2
82–1540	Screw	23	19	1
82–1550	Screw – Hex. Hd	30	7	.2
82–1560	Screw	28	14	1
82–1590	Screw	23	18	4
82–1600	Screw	27	1	2
82–1620	Washer – Lock	34	26	1
82–1640	Washer – Spring	25	19	5
82–1660	Washer – Lock	37	25	2
82–1690	Nut – Flange	30	5	1
82–1700	Nut – Speed	28	15	1
83–2710	Knob – Hi–Lo Range Shift	7	75	1
83–2720	Bolt – Lug	45	5	10
83–2890	Bearing – Needle	5	17	1
83–3530	Shaft – Cluster	7	39	1
83–6520	Rod – Lock	13	18	1
87–1370	Bolt	25	49	2
88–0020	Decal – Danger	17	3	1
88–0020	Decal – Rear Hood Danger	48	8	1
88–2170	Bracket – Belt	19	3	1
88–2710	Support – Steering	9	19	1
88–2782	Hood	17	2	1
88–3200	Decal – Maintenance	48	21	1
92–0900	Block – Short	25	1	1
92–0901	Piston Pin & Retaining	25	54	2
92–0902	Piston Pin & Retaining	25	*	2
92–0903	Piston Pin & Retaining	25	*	2
92–0904	Piston Pin & Retaining	25	*	2
92–0905	Set – Piston Ring, Std.	25	57	2
92–0906	Set – Piston Ring .005 O.S.	25		2
92–0907	Set – Piston Ring .010 O.S	25		2
92–0908	Set – Piston Ring .020 O.S	25		2
92–0909	Set – Piston Ring .030 O.S	25		2
92–0923	Hose – Fuel	35	19	1
92–0912	Elbow – 45°	29	11	1
92–0913	Nut – Wing	30	33	1
92–0914	Cover – Element	30	32	1
92–0915	Screw	30	31	1
92–0916	Screw	33	6	1
92–0917	Tube	30	25	1
92–0918	Manifold – Intake	31	5	1
92–0919	Rod – Governor Control	31	13	1
92–0920	Housing – Cylinder Air, L.H.	23	2	1
92–0921	Housing – Cylinder Air, R.H.	23	10	1
92–0922	Arm – Governor Control,	34	17	1
92–0980	Loose Parts Package Europe	48	*	1
92–1533	Loose Parts Package	48	*	1
92–4987	Steering Shaft Assembly	9	25	1
92–6529	Plate – Shift Cover	19	19	1
237–69	"O"Ring	9	41	1
281–2	Plug – Pipe, Sq Hd	5	7	1
281–10	Plug – Pipe, Allen Hd	5	6	1
302–5	Fitting – Grease	9	2	2
302–5	Fitting – Grease	11	61	2
321–2	Bolt	22	19	3
321–3	Bolt	11	5	2

*Not Illustrated

TORO PART NUMBER INDEX (Cont.)

Part No.	Description	Pg. No.	Ref. No.	Qty.
321–3	Bolt – Nylok	46	41	4
321–4	Bolt	43	6	2
321–4	Bolt	41	30	2
321–4	Bolt	21	37	2
321–6	Bolt	11	54	1
321–8	Bolt	47	16	2
321–9	Bolt	11	59	1
322–1	Bolt	9	5	1
322–2	Bolt	35	6	3
322–3	Bolt	21	15	2
322–3	Bolt	22	17	4
322–3	Bolt	21	21	4
322–4	Bolt	47	21	6
322–5	Bolt	15	38	3
322–6	Bolt	15	24	1
322–6	Bolt	2	3	1
323–5	Bolt	2	4	4
323–6	Bolt	3	6	3
323–6	Bolt	9	13	2
323–7	Bolt	46	16	1
323–7	Bolt	13	21	2
323–9	Bolt	9	20	2
323–9	Bolt	11	37	1
323–10	Bolt	5	4	5
323–15	Bolt	5	3	1
3217–5	Nut	7	48	1
3218–1	Nut	46	21	2
3218–3	Nut	45	10	4
3229–25	Bolt – Carriage	17	23	4
3229–25	Bolt – Carriage	46	24	2
3231–25	Bolt – Carriage	2	2	3
3235–22	Bolt	15	33	2
3242–2	Screw – Set	3	11	2
3243–5	Screw – Set	45	9	4
3245–32	Screw – Set	11	11	2
3246–2	Screw – Set	3	9	2
3251–25	Bolt	13	19	3
3253–2	Washer – Lock	37	15	3
3253–3	Washer – Lock	11	6	2
3253–3	Washer – Lock	41	45	4
3253–3	Washer – Lock	46	47	1
3253–3	Washer – Lock	11	57	1
3253–4	Washer – Lock	22	18	4
3253–4	Washer – Lock	35	5	1
3253–4	Washer – Lock	9	6	1
3253–4	Washer – Lock	47	11	12
3253–21	Washer – Lock	2	5	4
3253–21	Washer – Lock	3	5	3
3253–24	Washer – Lock	22	8	4
3254–1	Washer – Lock	44	13	4
3254–2	Washer – Lock	44	4	1
3256–3	Washer	3	2	2
3256–4	Washer	35	1	2
3256–5	Washer	15	36	1
3256–17	Washer	44	12	4
3256–22	Washer	43	7	4
3256–22	Washer	47	15	2
3256–22	Washer	46	22	2
3256–22	Washer	17	26	4
3256–22	Washer	41	31	4
3256–22	Washer	11	56	2
3256–23	Washer	44	3	1
3256–23	Washer	47	8	2
3256–23	Washer	21	16	2
3256–23	Washer	15	25	1
3256–23	Washer	15	43	2
3256–24	Washer	22	7	4
3256–24	Washer	11	38	1
3256–24	Washer	11	51	1
3256–25	Washer	3	8	3
3256–26	Washer	11	25	1
3256–26	Washer	15	55	1
3256–27	Washer	46	48	1
3256–30	Washer	15	15	3
3269–3	Rivet – Pop	44	15	4
3272–6	Pin – Cotter	11	15	1
3272–10	Pin – Cotter	46	7	1
3272–10	Pin – Cotter	46	12	2
3272–10	Pin – Cotter	11	20	2
3272–10	Pin – Cotter	11	31	3
3272–10	Pin – Cotter	15	35	1
3272–17	Pin – Cotter	45	19	2
3272–19	Pin – Cotter	9	18	1
3272–21	Pin – Cotter	9	42	1
3296–29	Nut	3	3	2
3296–29	Nut	44	5	1
3296–29	Nut	47	7	10
3296–29	Nut	21	10	7
3296–29	Nut	15	26	1
3296–29	Nut	21	30	6
3296–29	Nut	15	44	3
3296–39	Nut	2	3	3
3296–39	Nut	5	5	6
3296–39	Nut	46	19	1
3296–39	Nut	13	20	5
3296–39	Nut	11	32	1
3296–39	Nut	11	44	1
3296–39	Nut	15	56	1
3296–39	Nut	9	14	4
3296–42	Nut	47	16	2
3296–42	Nut	21	38	1
3296–42	Nut	11	58	2
32120–72	Ring – Snap	46	34	2
32120–93	Ring – Retaining	9	34	2
32121–25	Pin – Roll	15	48	1
32121–103	Pin – Spirol	15	47	1
32121–111	Pin – Spirol	9	31	1
32136–5	Nut – Slotted	9	37	1
32146–2	Nut	22	13	4
32146–7	Nut	41	36	2
32146–17	Nut	17	27	4

*Not Illustrated

AL-932859 Litho in U.S.A.

In an effort to make improvements available to TORO owners as quickly as possible, minor changes are incorporated into Toro's products from time to time that do not become immediately shown in the Parts Catalog. If such a change has been made in your unit, which is not reflected in your manual, see your TORO Distributor or his Authorized TORO Service Dealer for information and part numbers.

IDENTIFICATION AND ORDERING

MODEL AND SERIAL NUMBERS

The two identification numbers; a model number and a serial number. The two numbers are stamped on a plate which is located on the main frame under the seat. In any correspondence concerning the Product, supply model and serial numbers to assure that correct information and replacement parts are obtained.

To order replacement parts from an Authorized TORO Service Dealer, supply the following information:
1. Model and serial number.
2. Part number, description, and the quantity of part(s) desired.

NOTE: Do not order by reference number if a parts catalog is being used; use the PART NUMBER.

TABLE OF CONTENTS

Description	Page
Frame	2
Drive Belt And Pulleys	3
Mechanical Transmission 8–Speed	4
Front Axle and Steering	8
Clutch, Brake and Speed Control Linkage	10
Hitches	12
Manual Lift Linkage	14
Hood Assembly	16
Hood Stand And Supports	18
Fenders And Supports	20
Engine, Toro Power Plus And Exhaust	22
Blower Housing	23
Cylinder Block	24
Crankshaft, Camshaft, Flywheel	26
Oil , Base Fill Tube and Bracket	28
Oil Filter	29
Gear Case & Ignition Controls	36
Air Cleaner	30
Intake Manifold	31
Carburetor	32
Choke Linkage	33
Governor	34
Starter	42
Fuel System	35
Electrical System	39–44
Wheel And Tires	45
P.T.O. Clutch And Control	46
Seat	47
Decals	48
Numerical Parts List	49–55

Optional Equipment

Description	Model / Part No.
36" Rear Discharge Deck	78305
42" Side Discharge Deck	78345
42" Rear Discharge Deck	78350
42" Recycler	78355
48"Side Discharge Deck	78360
36" Tiller	79370
48" Dozer Blade	79350
50" Grader Blade	79351
42" Single Stage Snowthrower	79360
44" Two Stage Snowthrower	79361
Wheel Weights, Rear	81115
Wheel Weights, Front	81214
Wheel Weights, Rear Flush	81117
Tire Chains	82522
Clevis Hitch	85512
Front Mount Mower Carrier (42" & 48" S.D Mowers)	0701MC
Auxiliary Fuel Tank	83300
Twin Bag Blower Vac (42" & 48" S.D. Mowers)	79301
Tire Tubes, Front	100079
Tire Tubes, Rear	7007
Tire Cleated, Rear	7607
Tube Cleated Tire	110677
Wheel Cleated Tire	100291
Dual Wheel	80732
Kits	
H.D. Spindles, Wheels & Tires	80494
Recycler (42' R.D. Mower)	86001
Leaf Baffle (42' S.D. Mower)	85501
Front Weight	81125