Form No. 3360-816 Rev A

Channel Reinforcement Kit

Z400 Z Master Mowers

Model No. 112–8673

Installation Instructions

Note: Determine the left and right sides of the machine from the normal operating position.

1

Installing the Channel Plates

Parts needed for this procedure:

1	Small channel plate
4	Bolt (1/2 x 3–1/2 inches)
4	Flanged lock nut (1/2 inch)

Procedure

1. Disengage the PTO, move the motion control levers to the neutral locked position and set the parking brake.
2. Stop the engine, remove the key, and wait for all moving parts to stop before leaving the operating position.
3. Loosen the lug nuts or bolts on the rear tires (Figure 1).
4. Raise the machine so the rear tires are off the ground and support the machine with jack stands.
5. Remove the lug nuts or bolts and rear tires from the machine (Figure 1).
6. Remove the brake band bolts and remove the brake band from the wheel hub (Figure 1).
7. Remove the cotter pin from the axle nut and remove the axle nut and washer (Figure 1).
8. Pull the wheel hub from the wheel motor (Figure 1). This may require the use of a pulley puller to remove it.
9. If needed, remove the hydraulic lines connected to the wheel motor (Figure 1). Raise the ends above the hydraulic tank to prevent the fluid running out and plug the hydraulic lines.
10. Remove the retainer pin from the yoke at the top of the brake linkage (Figure 1).
11. Remove the bolts, washers and nuts holding the wheel motor to the frame and remove the wheel motor and brake assembly (Figure 1).

Note: Remember the position of the spacers. The long spacers are used for the rear bolts and the short spacers are used for the front bolts.

12. Place the small channel plate inside the frame channel (Figure 2).
13. Install the small channel plate, wheel motor, and brake assembly to the frame with the 2 short and long spacers, 4 flanged lock nuts (1/2 inch), and 4 bolts (1/2 x 3-1/2 inches) (Figure 2). Ensure the spacers are installed in the correct position.
14. Torque the bolts between 92 to 108 ft-lb (125 to 146 N-m)
15. Connect the hydraulic lines to the wheel motor if removed earlier (Figure 2).
16. Install the wheel hub to the wheel motor with the washer and slotted nut (Figure 2).

© 2008—The Toro® Company
8111 Lyndale Avenue South
Bloomington, MN 55420

Original Instructions (EN)
Printed in the USA.
All Rights Reserved

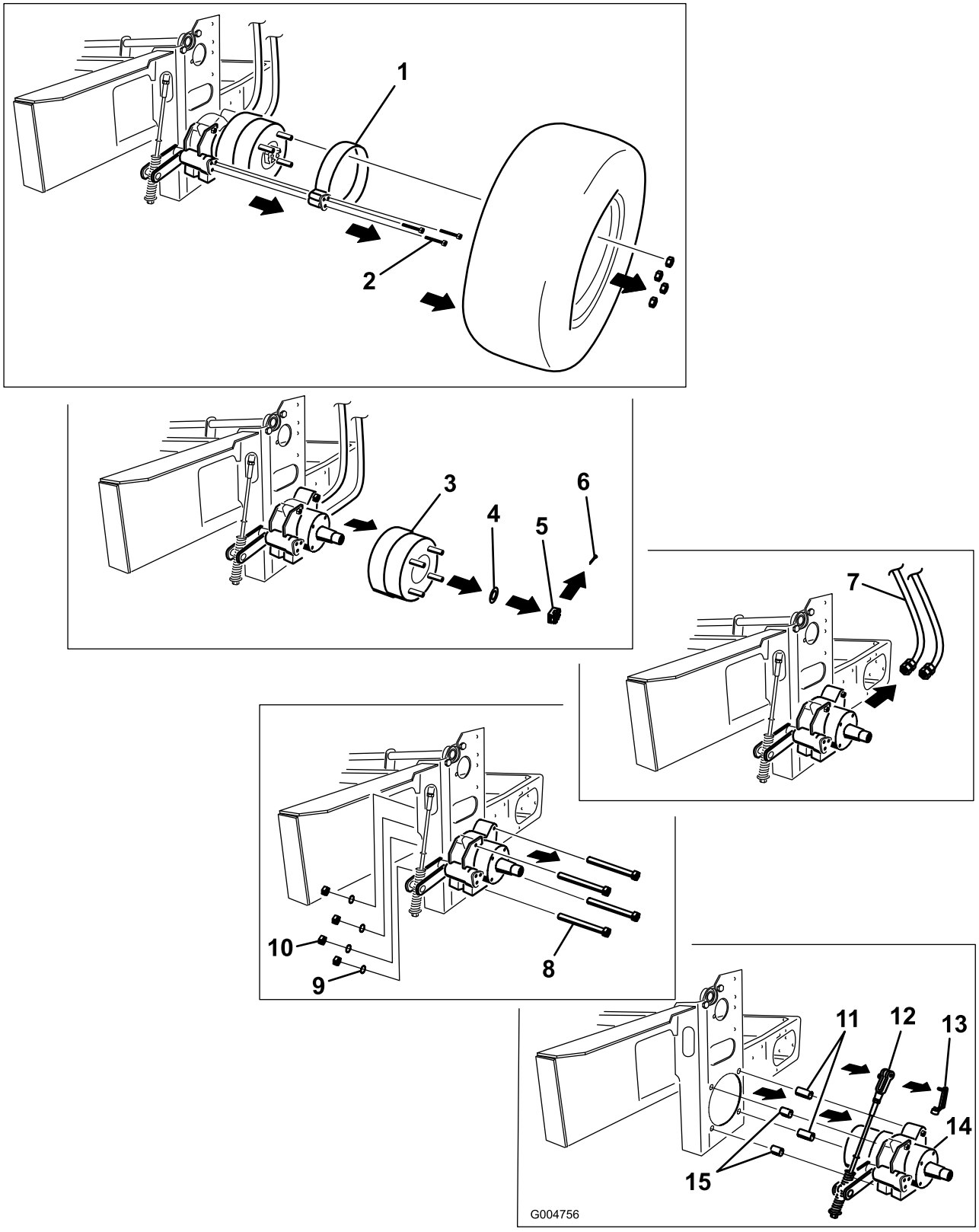

Figure 1

1. Brake band
2. Brake band bolts
3. Wheel hub
4. Washer
5. Slotted nut
6. Cotter pin
7. Hydraulic lines (remove if needed)
8. Wheel motor bolts
9. Washers
10. Nuts
11. Long spacer
12. Yoke at the top of the brake linkage
13. Retainer pin
14. Wheel motor
15. Short spacer

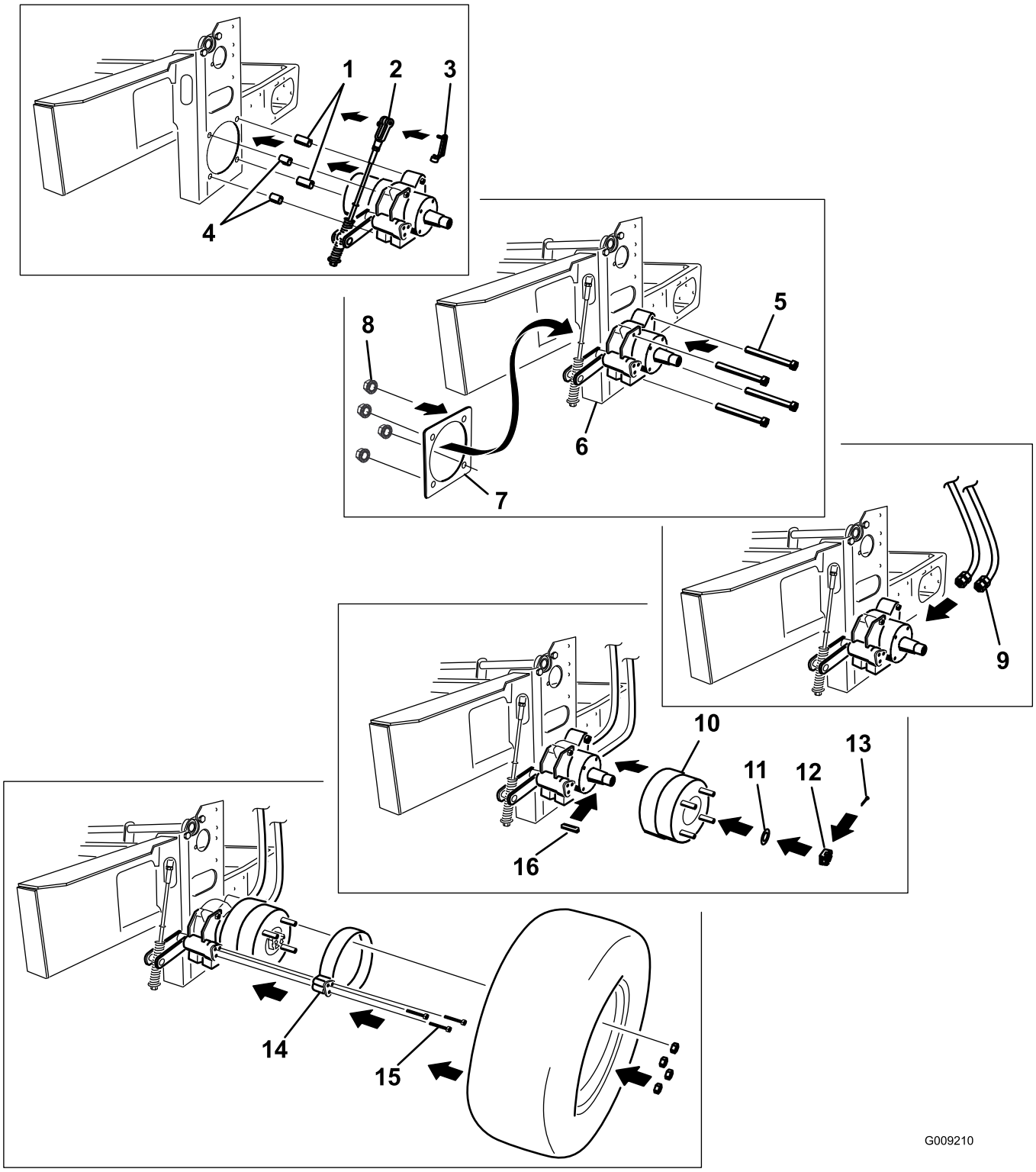

Figure 2

1. Long spacer
2. Yoke at the top of the brake linkage
3. Retainer pin
4. Short spacer
5. Wheel motor bolt (1/2 x 3-1/2 inches)
6. Channel
7. Small channel plate
8. Flanged lock nut (1/2 inch)
9. Hydraulic lines (install if removed)
10. Wheel hub
11. Washer
12. Slotted nut
13. Cotter pin
14. Brake band
15. Brake band bolts
16. Key

17. Torque the slotted nut to 125 ft-lb (170 N-m) (Figure 3).
18. Check the distance from bottom of slot in nut to inside edge of hole. Two threads or less should be showing (Figure 3).
19. If more than two threads are showing remove nut and install washer between hub and nut.
20. Tighten the nut until the next set of slots line up with the hole in the shaft (Figure 3).
21. Replace the cotter pin (Figure 2).

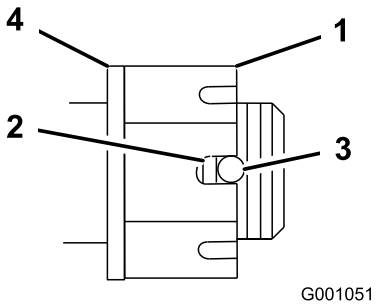

Figure 3

1. Slotted Nut
2. Two threads or less showing
3. Hole in threaded shaft
4. Washer (if needed)

---

22. Install the tire with wheel nuts or bolts to the machine (Figure 1).

    Torque the wheel nuts to 95 ft-lb (128 N-m).